SIEMENS

Data sheet 3RF2330-1AA04



Solid-state contactor 1-phase 3RF2 AC 51 / 30 A / 40 °C 48-460 V / 24 V DC screw terminal

product brand name	SIRIUS
product designation	solid-state contactor
design of the product	single-phase
product type designation	3RF23
manufacturer's article number	
• _1 of the accessories that can be ordered	3RF2900-3PA88
• _3 of the accessories that can be ordered	3RF2900-0EA18
• _4 of the accessories that can be ordered	3RF2950-0GA16
• _5 of the accessories that can be ordered	3RF2920-0FA08
product designation	
• _1 of the accessories that can be ordered	terminal cover
• _3 of the accessories that can be ordered	converter
• _4 of the accessories that can be ordered	load monitoring
• _5 of the accessories that can be ordered	load monitoring, basis
General technical data	
product function	zero-point switching
power loss [W] for rated value of the current	
• at AC in hot operating state	33 W
• at AC in hot operating state per pole	33 W
• without load current share typical	0.4 W
insulation voltage rated value	600 V
degree of pollution	3
type of voltage of the control supply voltage	DC
surge voltage resistance of main circuit rated value	6 kV
shock resistance according to IEC 60068-2-27	15g / 11 ms
vibration resistance according to IEC 60068-2-6	2g
reference code according to EN 61346-2	Q
reference code according to IEC 81346-2	Q
Substance Prohibitance (Date)	07/01/2006
Main circuit	
number of poles for main current circuit	1
number of NO contacts for main contacts	1
number of NC contacts for main contacts	0
operating voltage at AC	
• at 50 Hz rated value	48 ... 460 V
• at 60 Hz rated value	48 ... 460 V
operating frequency rated value	50 ... 60 Hz
operating range relative to the operating voltage at AC	
• at 50 Hz	40 ... 506 V
• at 60 Hz	40 ... 506 V

Subject to change without notice
© Copyright Siemens

operational current	
● at AC-51 rated value	30 A
● at AC-51 according to IEC 60947-4-3	22 A
● according to UL 508 rated value	27 A
operational current minimum	500 mA
rate of voltage rise at the thyristor for main contacts maximum permissible	1 000 V/µs
blocking voltage at the thyristor for main contacts maximum permissible	1 200 V
reverse current of the thyristor	10 mA
derating temperature	40 °C
surge current resistance rated value	600 A
I2t value maximum	1 800 A²·s
Control circuit/ Control	
type of voltage of the control supply voltage	DC
control supply voltage 1	
● at DC rated value	30 V
● at DC	15 ... 24 V
control supply voltage	
● at DC initial value for signal <1> detection	15 V
● at DC full-scale value for signal<0> recognition	5 V
control current at minimum control supply voltage	
● at DC	13 mA
control current at DC rated value	15 mA
ON-delay time	1 ms; additionally max. one half-wave
OFF-delay time	1 ms; additionally max. one half-wave
Auxiliary circuit	
number of NC contacts for auxiliary contacts	0
number of NO contacts for auxiliary contacts	0
number of CO contacts for auxiliary contacts	0
Installation/ mounting/ dimensions	
fastening method	screw fixing and snap-on mounting on standard mounting rail 35 mm according to IEC 60715
● side-by-side mounting	Yes
design of the thread of the screw for securing the equipment	M4
height	95 mm
width	45 mm
depth	135.5 mm
Connections/ Terminals	
type of electrical connection	
● for main current circuit	screw-type terminals
● for auxiliary and control circuit	screw-type terminals
type of connectable conductor cross-sections	
● for main contacts	
— solid	2x (1.5 ... 2.5 mm²), 2x (2.5 ... 6 mm²)
— finely stranded with core end processing	2x (1 ... 2.5 mm²), 2x (2.5 ... 6 mm²), 1x 10 mm²
● for AWG cables for main contacts	2x (14 ... 10)
connectable conductor cross-section for main contacts	
● solid or stranded	1.5 ... 6 mm²
● finely stranded with core end processing	1 ... 10 mm²
type of connectable conductor cross-sections	
● for auxiliary and control contacts	
— solid	1x (0.5 ... 2.5 mm²), 2x (0.5 ... 1.0 mm²)
— finely stranded with core end processing	1x (0.5 ... 2.5 mm²), 2x (0.5 ... 1.0 mm²)
— finely stranded without core end processing	1x (0.5 ... 2.5 mm²), 2x (0.5 ... 1.0 mm²)
● for AWG cables for auxiliary and control contacts	1x (AWG 20 ... 12)
AWG number as coded connectable conductor cross section for main contacts	10 ... 10
tightening torque	
● for main contacts with screw-type terminals	2 ... 2.5 N·m
● for auxiliary and control contacts with screw-type	0.5 ... 0.6 N·m

Subject to change without notice
© Copyright Siemens

terminals	
tightening torque [lbf·in]	
● for main contacts with screw-type terminals	18 ... 22 lbf·in
● for auxiliary and control contacts with screw-type terminals	4.5 ... 5.3 lbf·in
design of the thread of the connection screw	
● for main contacts	M4
● of the auxiliary and control contacts	M3
stripped length of the cable	
● for main contacts	7 mm
● for auxiliary and control contacts	7 mm
Safety related data	
protection class IP on the front according to IEC 60529	IP20
touch protection on the front according to IEC 60529	finger-safe, for vertical contact from the front
Ambient conditions	
installation altitude at height above sea level maximum	1 000 m
ambient temperature	
● during operation	-25 ... +60 °C
● during storage	-55 ... +80 °C
Electromagnetic compatibility	
conducted interference	
● due to burst according to IEC 61000-4-4	2 kV / 5 kHz behavior criterion 2
● due to conductor-earth surge according to IEC 61000-4-5	2 kV behavior criterion 2
● due to conductor-conductor surge according to IEC 61000-4-5	1 kV behavior criterion 2
● due to high-frequency radiation according to IEC 61000-4-6	140 dBuV in the frequency range 0.15 ... 80 MHz, behavior criterion 1
field-based interference according to IEC 61000-4-3	80 MHz ... 1 GHz 10 V/m, behavior criterion 1
electrostatic discharge according to IEC 61000-4-2	4 kV contact discharging / 8 kV air discharging, behavior criterion 2
conducted HF interference emissions according to CISPR11	Class A for industrial environment
field-bound HF interference emission according to CISPR11	Class B for the domestic, business and commercial environments
Short-circuit protection, design of the fuse link	
manufacturer's article number	
● of gS fuse for semiconductor protection at NH design usable	3NE1803-0
● of full range R fuse link for semiconductor protection at cylindrical design usable	5SE1335
● of back-up R fuse link for semiconductor protection at NH design usable	3NE8003-1
● of back-up R fuse link for semiconductor protection at cylindrical design 10 x 38 mm usable	3NC1032
● of back-up R fuse link for semiconductor protection at cylindrical design 14 x 51 mm usable	3NC1450
● of back-up R fuse link for semiconductor protection at cylindrical design 22 x 58 mm usable	3NC2263
manufacturer's article number of the gG fuse	
● at NH design usable	3NA6807; These fuses have a smaller rated current than the semiconductor relays
● at cylindrical design 14 x 51 mm usable	3NW6105-1; These fuses have a smaller rated current than the semiconductor relays
● at cylindrical design 22 x 58 mm usable	3NW6205-1; These fuses have a smaller rated current than the semiconductor relays
manufacturer's article number	
● of DIAZED fuse usable	5SB2711; These fuses have a smaller rated current than the semiconductor relays
● of NEOZED fuse usable	5SE2320; These fuses have a smaller rated current than the semiconductor relays

Certificates/ approvals

General Product Approval	EMC	Declaration of Conformity

Subject to change without notice
© Copyright Siemens

Confirmation

Declaration of Conformity	Test Certificates		other	Railway
UKCA	Special Test Certificate	Type Test Certificates/Test Report	Confirmation	Vibration and Shock

Further information

Siemens has decided to exit the Russian market (see here).
https://press.siemens.com/global/en/pressrelease/siemens-wind-down-russian-business
Siemens is working on the renewal of the current EAC certificates.
Please contact your local Siemens office on the status of validity of the EAC certification if you intend to import or offer to supply these products to an EAC relevant market (other than the sanctioned EAEU member states Russia or Belarus).
Information on the packaging
https://support.industry.siemens.com/cs/ww/en/view/109813875
Information- and Downloadcenter (Catalogs, Brochures,…)
https://www.siemens.com/ic10
Industry Mall (Online ordering system)
https://mall.industry.siemens.com/mall/en/en/Catalog/product?mlfb=3RF2330-1AA04
Cax online generator
http://support.automation.siemens.com/WW/CAXorder/default.aspx?lang=en&mlfb=3RF2330-1AA04
Service&Support (Manuals, Certificates, Characteristics, FAQs,...)
https://support.industry.siemens.com/cs/ww/en/ps/3RF2330-1AA04
Image database (product images, 2D dimension drawings, 3D models, device circuit diagrams, EPLAN macros, ...)
http://www.automation.siemens.com/bilddb/cax_de.aspx?mlfb=3RF2330-1AA04&lang=en

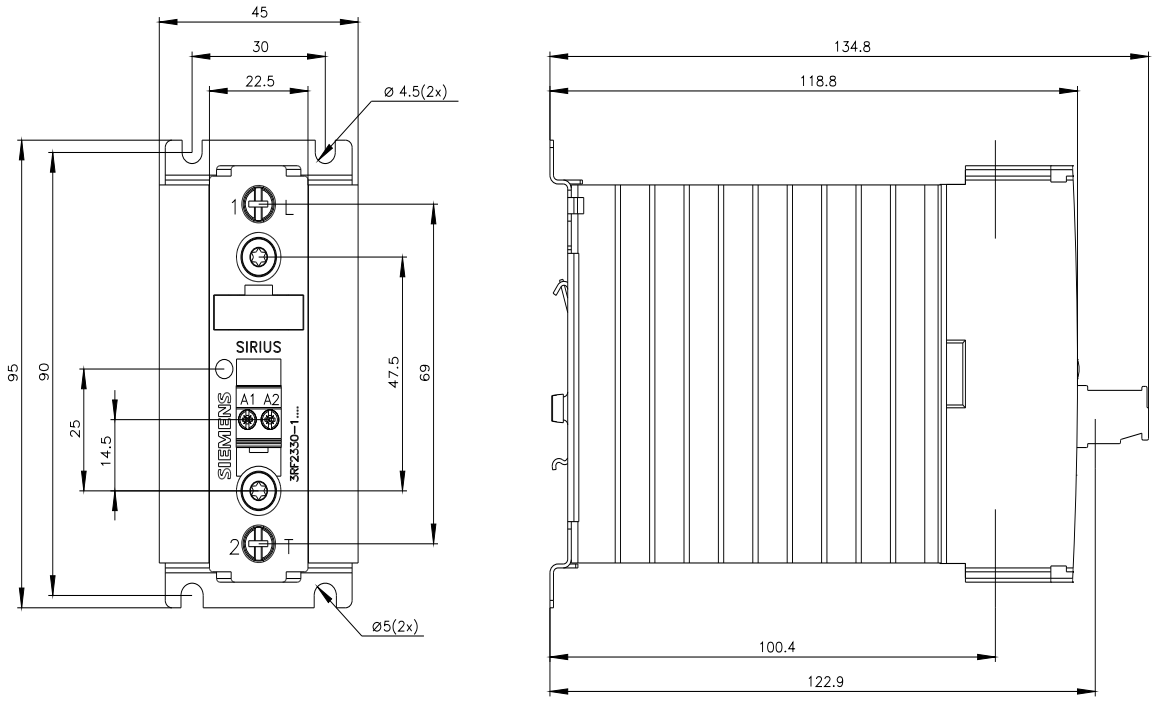

Subject to change without notice
© Copyright Siemens

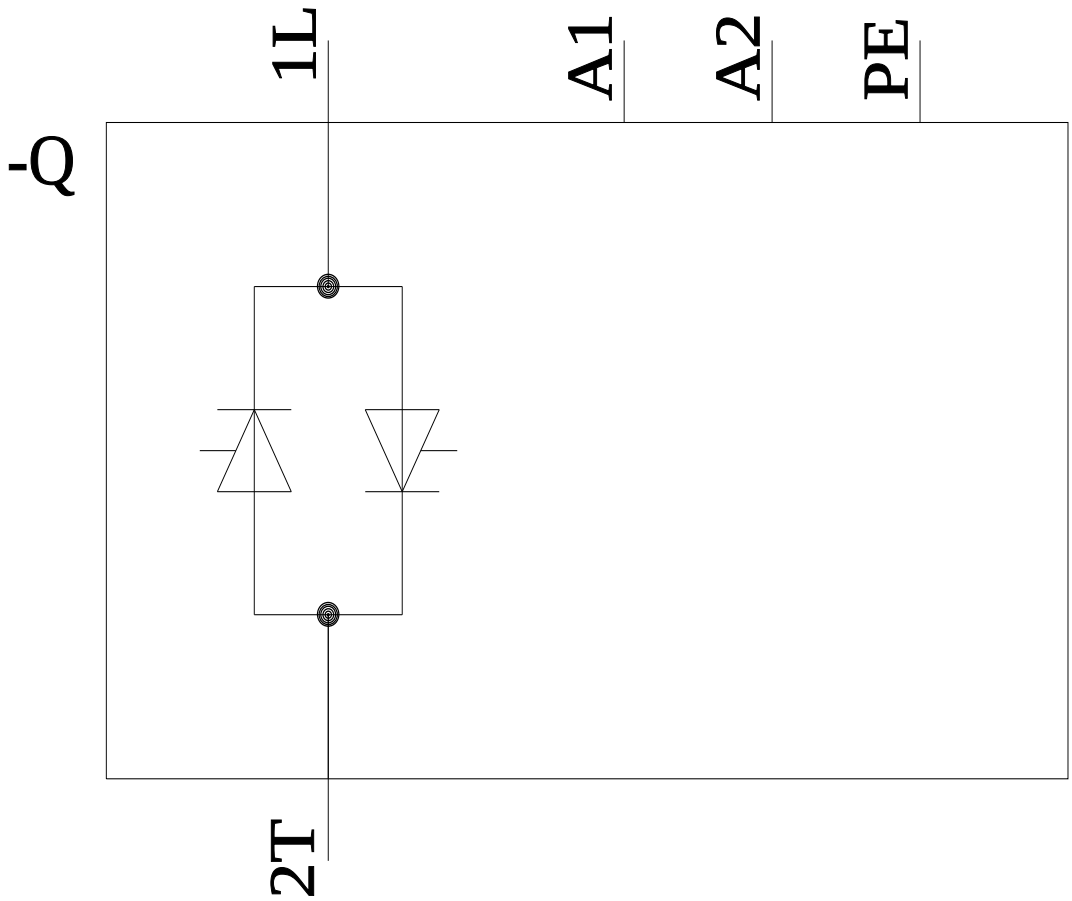

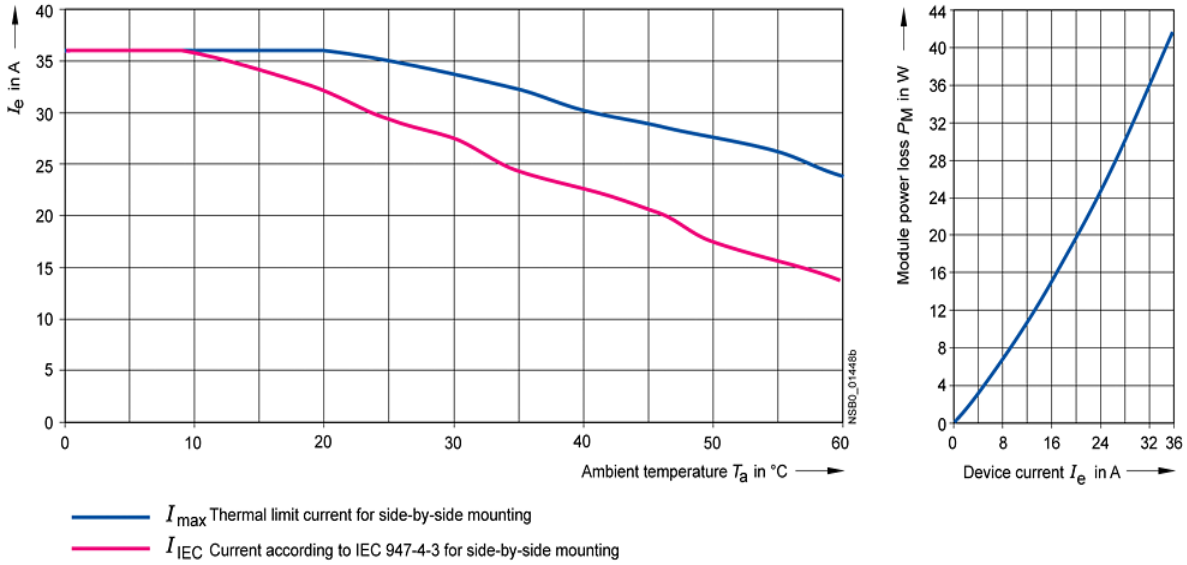

last modified: 1/26/2022

Subject to change without notice
© Copyright Siemens