BRYANT®

Wallplate
Decorator
1-Gang



Features

- High-impact, self-extinguishing polycarbonate material
- More rigid; sharp lines and less dimpling
- Smooth satin finish; blends into wall with an optimum finish
- Captive screw feature on single-gang versions, hold screws in place for quick installation

Ordering Information

Description	Gang	Color	UPC Number	Catalog Number
Decorator wallplate, smooth satin finish, for use with decorator devices	1	Light Almond	883778312151	**P26LA**

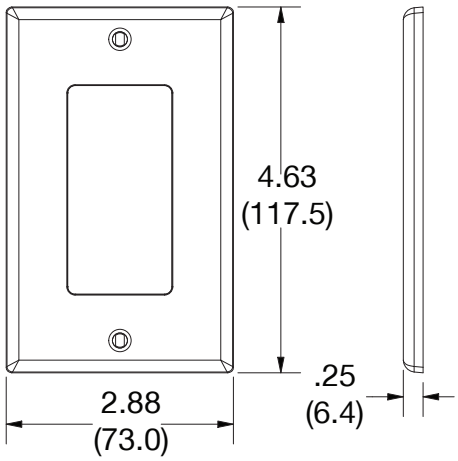

Listings

cULus Listed

Specifications

Material	Polycarbonate thermoplastic
Thickness	.25 (6.4)
Orientation	Orientation
Mounting	Screw
Mounting Screws	Painted steel
Dimensions	4.63 in x 2.88 in x 0.25 in
Flammability	UL 94 V2

Dimensions in Inches (mm)

Bryant Electric • An affiliate of Hubbell Incorporated (Delaware) • 40 Waterview Drive • Shelton, CT 06484
Phone (800) 323-2792 • Specifications subject to change without notice