# FFLEDSW



Color: White

Weight: 5.1 lbs

| | |
|---|---|
| **Project:** | **Type:** |
| **Prepared By:** | **Date:** |

### Driver Info

| | |
|---|---|
| Type | Constant Current |
| 120V | 0.25A |
| 208V | 0.14A |
| 240V | 0.13A |
| 277V | 0.11A |
| Input Watts | 18-46.4W |

### LED Info

| | |
|---|---|
| Watts | 26W |
| Color Temp | 4000K/5000K |
| Color Accuracy | 82-83 CRI |
| L70 Lifespan | 100,000 Hours |
| Lumens | 2615-6243 lm |
| Efficacy | 134.5-145.8 lm/W |

## Technical Specifications

### Field Adjustability

**Field Adjustable:**

Field Adjustable Light Output:
39W/26W/18W (factory default 39W)
Color temperature (selectable by 4000K and 5000K)

### Compliance

**UL Listed:**

Suitable for wet locations. Suitable for mounting within 1.2m (4ft) of the ground.

**IP Rating:**

Ingress protection rating of IP66 for dust and water

**IESNA LM-79 & LM-80 Testing:**

RAB LED luminaires and LED components have been tested by an independent laboratory in accordance with IESNA LM-79 and LM-80.

**DLC Listed:**

This product is listed by Design Lights Consortium (DLC) as an ultra-efficient premium product that qualifies for the highest tier of rebates from DLC Member Utilities. Designed to meet DLC 5.1 requirements.
DLC Product Code: P201EN30

### LED Characteristics

**LEDs:**

Long-life, high-efficacy, discrete, surface-mount LEDs

**Color Consistency:**

7-step MacAdam Ellipse binning to achieve consistent fixture-to-fixture color

**Color Stability:**

LED color temperature is warrantied to shift no more than 200K in color temperature over a 5-year period

**Color Uniformity:**

RAB's range of Correlated Color Temperature follows the guidelines of the American National Standard for (SSL) Products, ANSI C78.377-2017.

### Electrical

**Driver:**

18W: Constant Current, Class 2, 120-277V, 50/60 Hz, 120V: 0.15A, 208V: 0.09A, 240V: 0.08A, 277V: 0.07A

26W: Constant Current, Class 2, 120-277V, 50/60 Hz, 120V: 0.25A, 208V: 0.14A, 240V: 0.13A, 277V: 0.11A

39W: Constant Current, Class 2, 120-277V, 50/60 Hz, 120V: 0.38A, 208V: 0.22A, 240V: 0.19A, 277V: 0.17A

**Dimming Driver:**

Driver includes dimming control wiring for 0-10V dimming systems. Requires separate 0-10V DC dimming circuit. Dims down to 10%.

**THD:**

1.93% at 120V, 10.57% at 277V

**Power Factor:**

99.92% at 120V, 90.54% at 277V

**Surge Protection:**

4kV


Copyright © 2023 RAB Lighting All Rights Reserved Note: Specifications are subject to change at any time without notice

## Technical Specifications (continued)

### Performance

**Lifespan:**

100,000-Hour LED lifespan based on IES LM-80 results and TM-21 calculations

**Wattage Equivalency:**

39W: 200W Metal Halide
26W: 150W Metal Halide
18W: 100W Metal Halide

### Optical

**NEMA Type:**

NEMA Beam Spread of 7H x 6V

### Construction

**Cold Weather Starting:**

The minimum starting temperature is -40°C (-40°F)

**Ambient Temperature:**

Suitable for use in up to 40°C (104°F)

**Housing:**

Die-cast aluminum

**Mounting:**

Robust knuckle mount with 180° adjustable swivel arm. Tilt angle in 10° increments.

**Effective Projected Area:**

EPA = 0.32

**Lens:**

Ultra clear, tempered glass

**Reflector:**

Vacuum metalized polycarbonate

**Gaskets:**

High-temperature silicone gaskets

**Finish:**

Formulated for high durability and long-lasting color

**Green Technology:**

Mercury and UV free. RoHS-compliant components.

### Other

**Warranty:**

RAB warrants that our LED products will be free from defects in materials and workmanship for a period of ten (10) years from the date of delivery to the end user, including coverage of light output, color stability, driver performance and fixture finish. RAB's warranty is subject to all terms and conditions found at rablighting.com/warranty.

**Trade Agreements Act Compliant:**

This product is a product of Cambodia and a "designated country" end product that complies with the Trade Agreements Act

**Buy American Act Compliance:**

RAB values USA manufacturing! Upon request, RAB may be able to manufacture this product to be compliant with the Buy American Act (BAA). Please contact customer service to request a quote for the product to be made BAA compliant.

## Dimensions

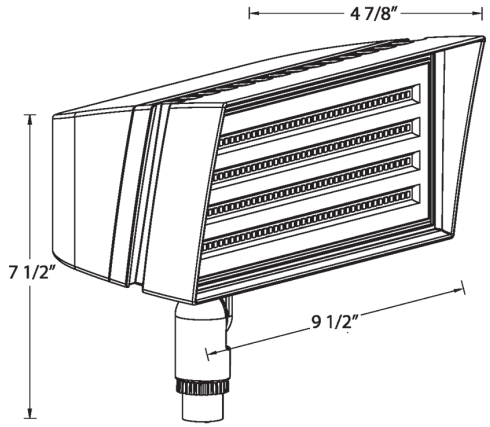


## Features

- Ultra-efficient LED and optical design
- 100,000-hour life based on LM-80 results and TM-21 calculations
- DLC Premium Listed
- 10-Year, No-Compromise Warranty


Copyright © 2023 RAB Lighting All Rights Reserved Note: Specifications are subject to change at any time without notice

## Ordering Matrix

| Family | Housing Size | Color Temp | Mounting | Finish | Voltage | Options |
|---|---|---|---|---|---|---|
| FFLED | S | | | W | | |
| | **XS =** Field Adjustable 18W/13W/9W<br>**S =** Field Adjustable 39W/26W/18W<br>**M =** Field Adjustable 80W/52W<br>**L =** Field Adjustable 230W/180W/120W | **Blank =** Field Adjustable 5000K/4000K<br>**Y =** 3000K Warm | **Blank =** Knuckle Mount<br>**SF =** Slipfitter<br>**T =** Trunnion | **Blank =** Bronze<br>**W =** White | **Blank =** 120-277V, 0-10V Dimming<br>**/480 =** 480V, 0-10V Dimming | **Blank =** No Option<br>**/7PR =** 7Pin Receptacle<br>**/PCU =** 120-277V Button Photocell |


Copyright © 2023 RAB Lighting All Rights Reserved Note: Specifications are subject to change at any time without notice