Rotary Table/Rack & Pinion Style

Series MSQ

Size: 1, 2, 3, 7, 10, 20, 30, 50, 70, 100, 200

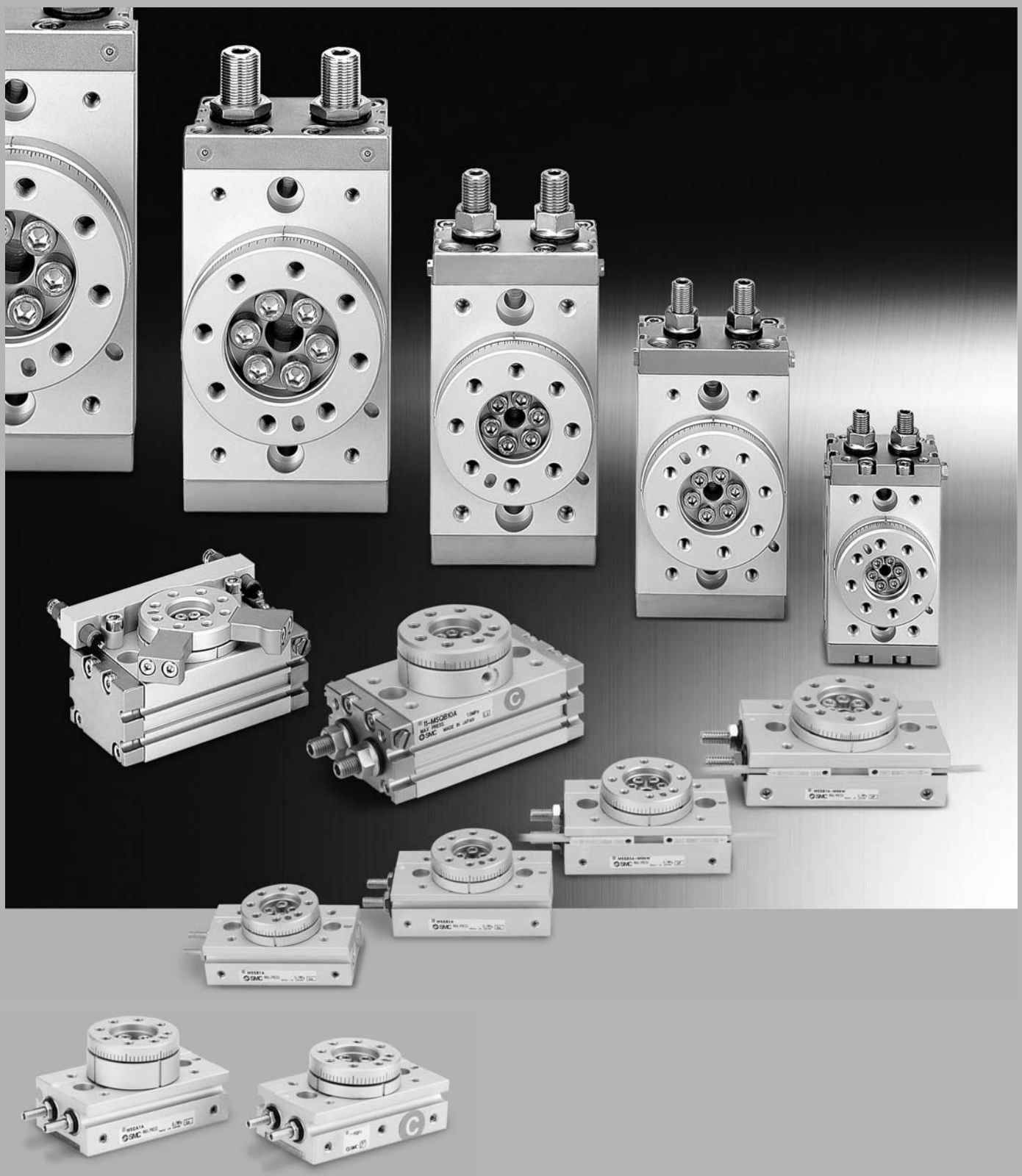

Compact Rotary Table with Low Table Height

Easy mounting of work piece.

- **Table I.D/O.D tolerances**
  Basic type: **MSQB** **H9/h9**
  High precision type: **MSQA** **H8/h8**
- **Positioning pin hole**
- **Hollow axis**
  Accommodates wiring and piping for equipment mounted on the table

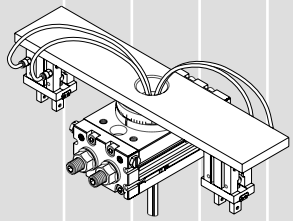

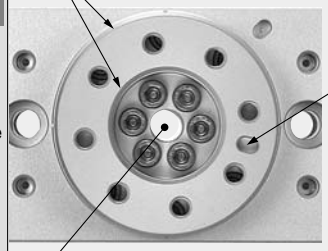

Size	1	2	3	7
Hollow axis	ø3.5	ø3.8	ø5	ø6

Size	10	20	30	50	70	100	200
Hollow axis	ø5	ø9	ø9	ø10	ø16	ø19	ø24

Large rolling element bearing

3 to 4 times higher axial load
(compared with series CRQ)

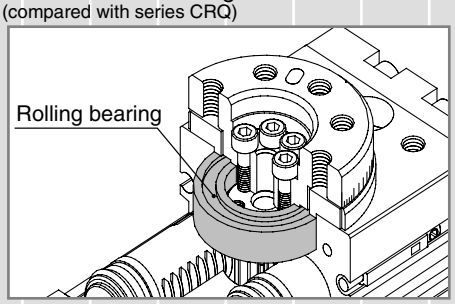

Basic type
MSQB



Pivoting angle adjustment range: 0 to 190°

With internal shock absorber

2 to 5 times more kinetic energy
(compared with an adjustment bolt)

Easy mounting of body

- **Reference dia: Boss, Hole**
- **Positioning pin hole**
- **Mounting from 2 directions**

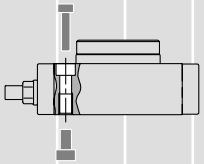

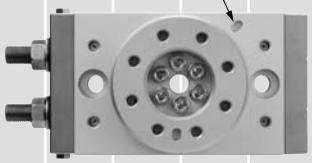

High precision type
MSQA

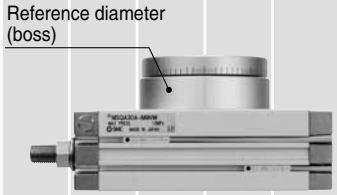

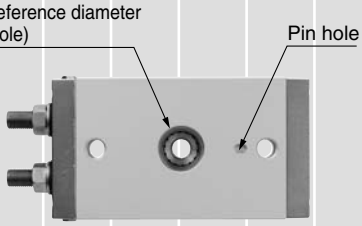



Movement in direction of table's radial thrust: 0.01mm or less

By using high precision bearing, the movement in the direction of table's radial thrust is reduced.

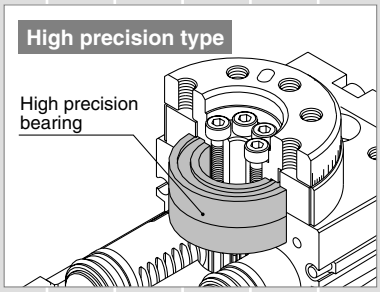

Piping from 2 directions (front and side) is possible

Piping position can be selected accommodate mounting conditions

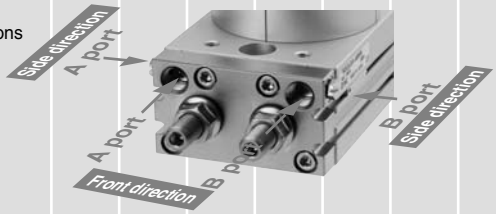

SMC

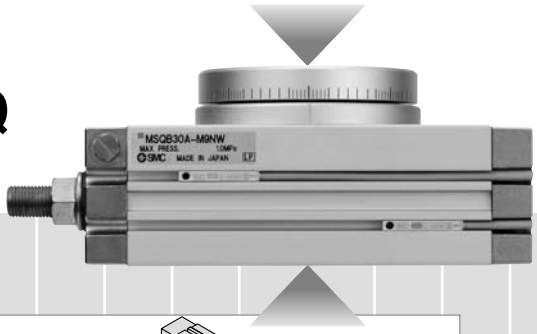

Small sizes 1, 2, 3, and 7

Small size and light weight

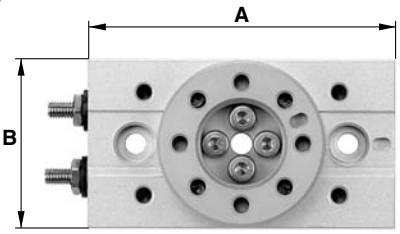

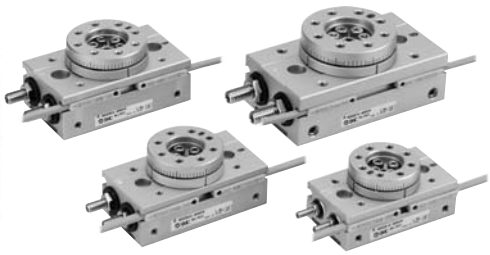

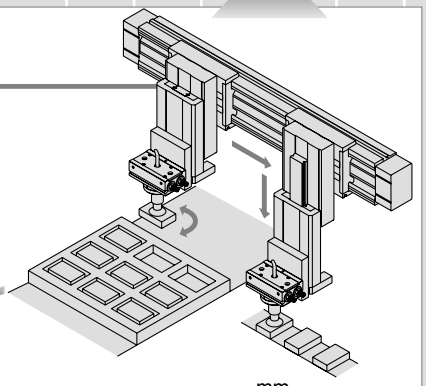





Full size (Picture of MSQB1A)

Measure mm

Size	Model	A	B	C	D	Mass (g)
1	MSQB1A	50.5	28	25	16	70
2	MSQB2A	56	30	28	18	105
3	MSQB3A	60	34.5	30.5	20.5	150
7	MSQB7A	73.5	41	34.5	23	250

Variety of installation options for space saving

Offers maximum space saving installation by taking advantage of the compact body, space saving wiring and piping.

Free mount

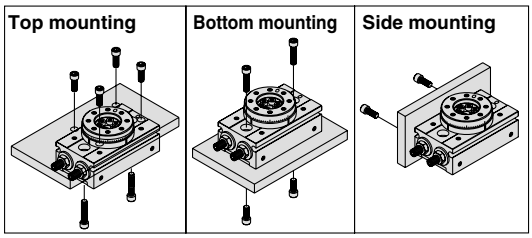

Easy center alignment at mounting

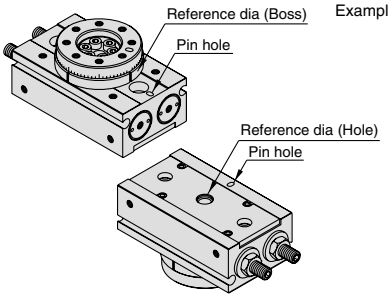

Wiring and piping can be selected according to mounting conditions

Example of auto switch and speed controller mounting

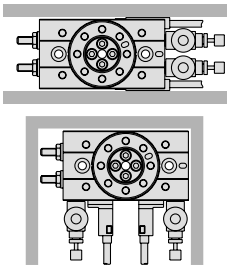

External shock absorber types

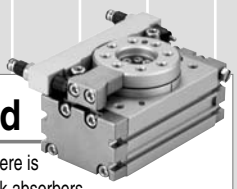

4 to 10 times more allowable kinetic energy

(Compared with internal shock absorber type)

2 types of shock absorbers are available, for low energy and high energy.

Allowable kinetic energy comparison (for size 30)

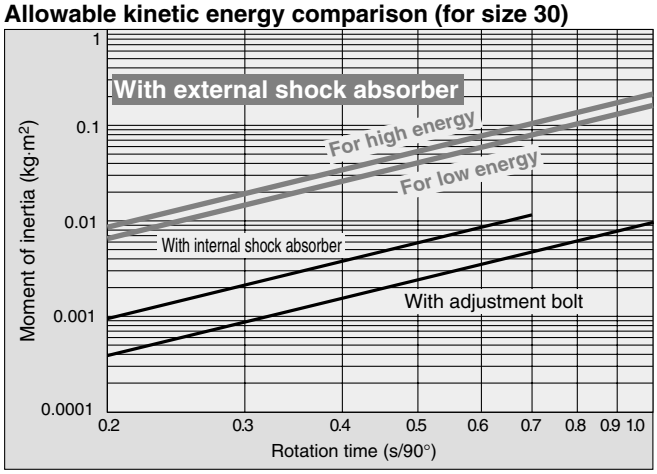

Total length shortened

Longitudinal mounting space is reduced because there is no protrusion from adjustment bolts or internal shock absorbers.

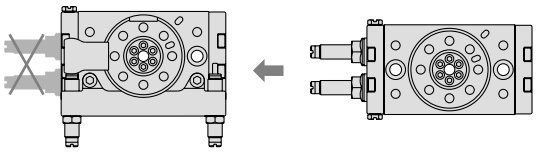

Table height is the same for both types with adjustment bolts or internal shock absorbers.

Rotation angle: 90°, 180°

90°

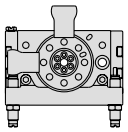

180°

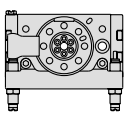

Left / Right symmetric type

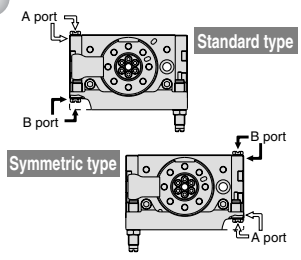

Table Displacement (Reference values)

• The following graphs show the displacement at point A, which is 100 mm apart from the center of rotation, where the load is applied.

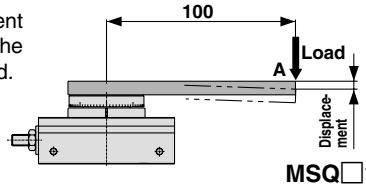

MSQ□1A

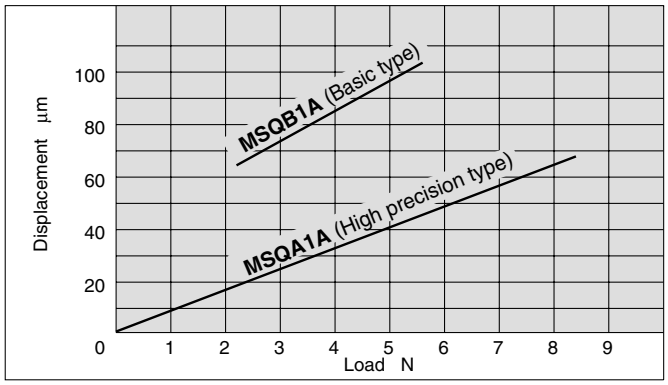

MSQ□10□

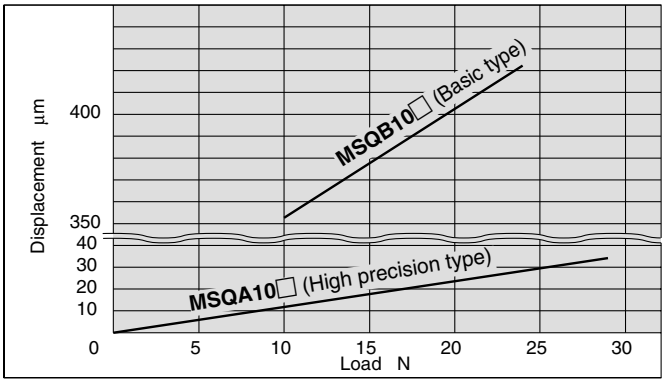

MSQ□2A

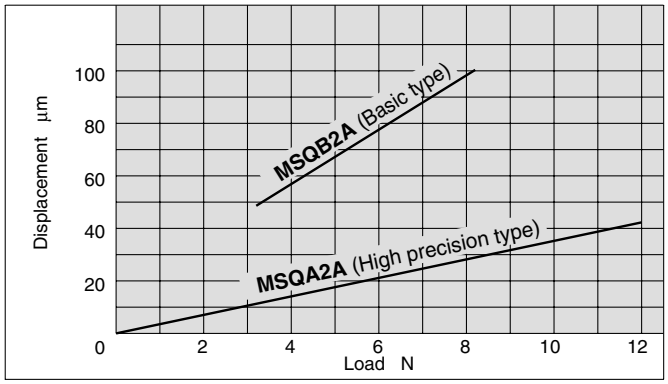

MSQ□20□

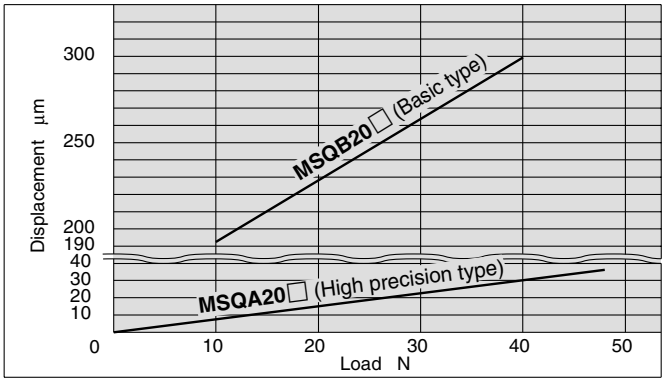

MSQ□3A

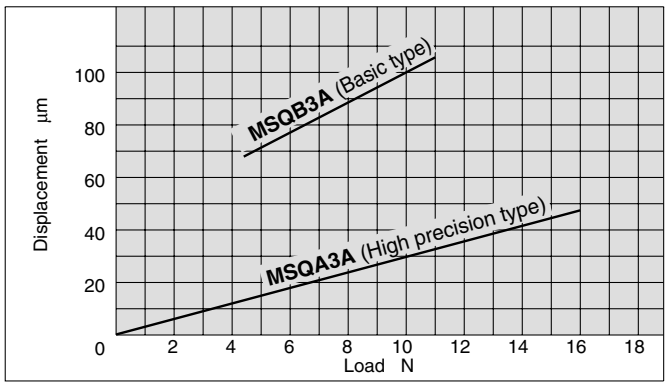

MSQ□30□

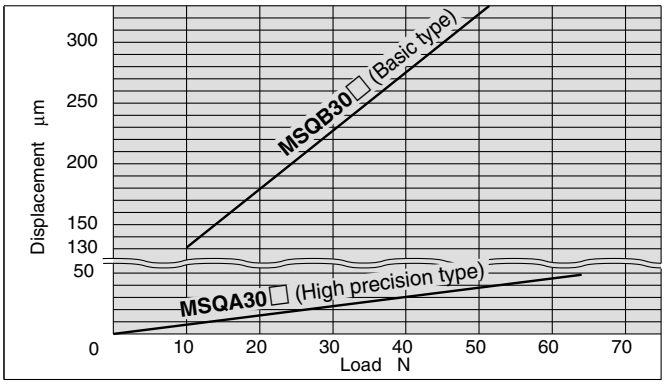

MSQ□7A

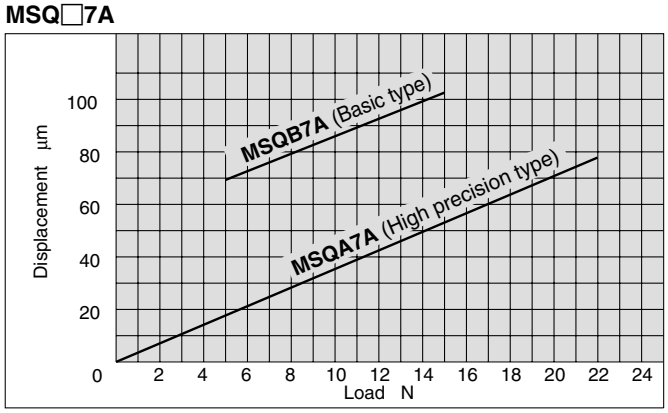

MSQ□50□

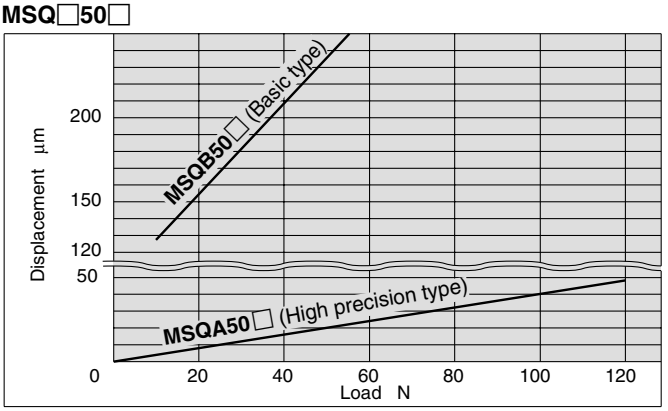

Table Displacement due to Moment Load (Reference values)

• The following graphs show the displacement at point A, which is 100 mm apart from the center of rotation, where the load is applied.

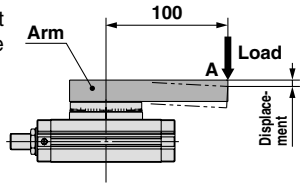

MSQB70□

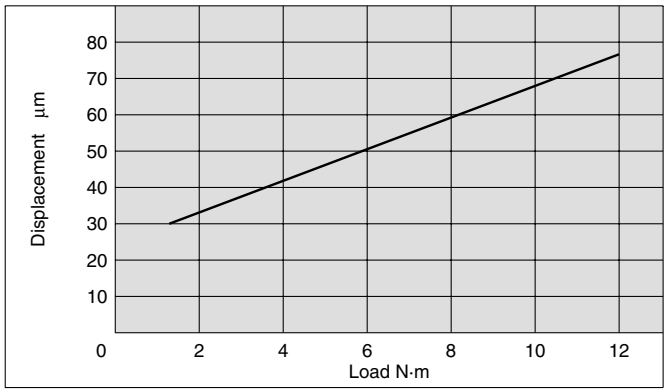

MSQB100□

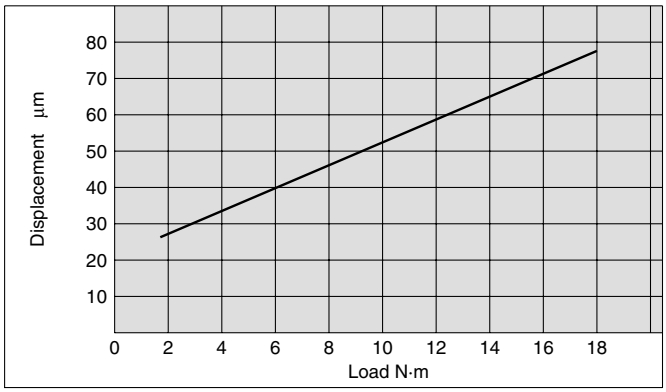

MSQB200□

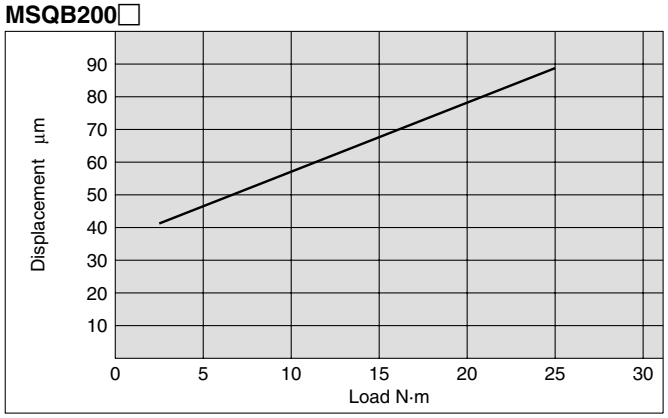

Rotation Accuracy: Displacement Values at 180° (Reference values)

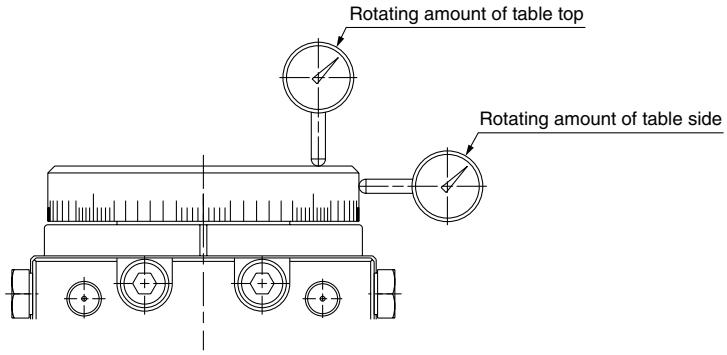

mm

Measuring plate	MSQA	MSQB
Rotating amount of table top	0.03	0.1
Rotating amount of table side	0.03	0.1

Values in the table are actual values and not guaranteed values.

Rotary Table/Rack & Pinion Style

Series MSQ

Size: 1, 2, 3, 7

How to Order

High precision type **MSQA** **1** **A** **□** – **M9BW** **□**

Basic type **MSQB** **1** **A** **□** – **M9BW** **□**

Size

1
2
3
7

A	With adjustment bolt

Number of auto switches

Nil	2 pcs.
S	1 pc.
n	n pcs.

Auto switch type

Nil	Without auto switch (built-in magnet)

∗ Refer to the table below for auto switch types.
∗ The auto switch is included in the package (unmounted).

Port location

Nil	**End port** 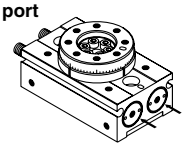
E	**Front port** 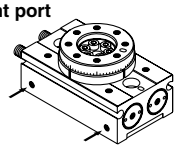

Applicable Auto Switch/Refer to pages 761 to 809 for detailed auto switch specification.

Type	Special function	Electrical entry	Indicator light	Wiring (Output)	Load voltage			Auto switch model		Lead wire length (m)∗				Pre-wired connector	Applicable load	
					DC		AC	Perpendicular	In-line	0.5 (Nil)	1 (M)	3 (L)	5 (Z)			
Solid state switch	—	Grommet	Yes	3-wire (NPN)	24 V	5 V, 12 V	—	**M9NV**	**M9N**	●	●	●	○	○	IC circuit	Relay, PLC
								F8N	—	●	—	●	○	—		
				3-wire (PNP)				**M9PV**	**M9P**	●	●	●	○	○		
								F8P	—	●	—	●	○	—		
				2-wire		12 V		**M9BV**	**M9B**	●	●	●	○	○	—	
								F8B	—	●	—	●	○	—		
	Diagnostic indication (2-color display)			3-wire (NPN)		5 V, 12 V		**M9NWV**	**M9NW**	●	●	●	○	○	IC circuit	
				3-wire (PNP)				**M9PWV**	**M9PW**	●	●	●	○	○		
				2-wire		12 V		**M9BWV**	**M9BW**	●	●	●	○	○	—	
	Water resistant (2-color indication)			3-wire (NPN)		5 V, 12 V		**M9NAV**∗∗	**M9NA**∗∗	○	○	●	○	○	IC circuit	
				3-wire (PNP)				**M9PAV**∗∗	**M9PA**∗∗	○	○	●	○	○		
				2-wire		12 V		**M9BAV**∗∗	**M9BA**∗∗	○	○	●	○	○	—	

∗∗ Although it is possible to mount water resistant type auto switches, note that the rotary actuator itself is not of water resistant construction.
∗ Lead wire length symbols: 0.5 m ····· Nil (Example) M9NW
1 m ····· M (Example) M9NWM
3 m ····· L (Example) M9NWL
5 m ····· Z (Example) M9NWZ
∗ Auto switches marked with "○" are made to order specification.

Made to Order Refer to pages 796 and 797 for the details of solid state auto switch with pre-wired connector.

Note 1) When using D-F8□, mount it at a distance of 10 mm or more from magnetic substances such as iron.
∗ Auto switches are shipped together, (but not assembled).

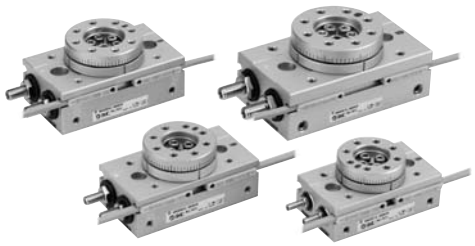

Basic type



High precision type

JIS symbol

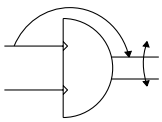

Specifications

Size	1	2	3	7
Fluid	Air (non-lube)			
Maximum operating pressure	0.7 MPa			
Minimum operating pressure	0.1 MPa			
Ambient and fluid temperature	0 to 60°C (with no freezing)			
Cushion	None		Rubber bumper	
Angle adjustment range	0 to 190°			
Maximum rotation	190°			
Cylinder bore size	ø6	ø8	ø10	ø12
Port size	M3 x 0.5			M5 x 0.8

Allowable Kinetic Energy and Rotation Time Adjustment Range

Size	Allowable kinetic energy (J)	Rotation time adjustment range for suitable operation (s/90°)
1	0.001	0.2 to 0.7
2	0.0015	
3	0.002	
7	0.006	0.2 to 1.0

Note) If operated where the kinetic energy exceeds the allowable value, this may cause damage to the internal parts and result in product failure. Please pay special attention to the kinetic energy levels when designing and during operation to avoid exceeding the allowable limit.

Mass

(g)

Size	1	2	3	7
Basic type	75	105	150	250
High precision type	80	115	165	265

Note) Excluding the mass of auto switches

Clean Series

Prevents dispersion of the particles generated inside of the product into the clean room by sucking them out of the vacuum port on the body side.

How to Order

11 – MSQ B 1 A E – M9BW S

- **11**: Clean Series Vacuum type
- **B**: A – High precision type; B – Basic type
- **1**: Size – 1, 2, 3, 7
- **A**: A – With adjustment bolt
- **E**: Port location – Nil – End port; E – Front port
- **M9BW**: Auto switch
- **S**: Number of auto switches

Specifications

Particle generation grade	Suction flow rate (example)
Grade 1 Note 1)	1 ℓ/min (ANR)

11-MSQA is identical to the high precision type and 11-MSQB is identical to the basic type.

Note) Please refer to "Pneumatic Clean Series" catalog for further details.

Dimensions

Clean series products do not have a hollow axis.



Basic type
11-MSQB□A

High precision type
11-MSQA□A

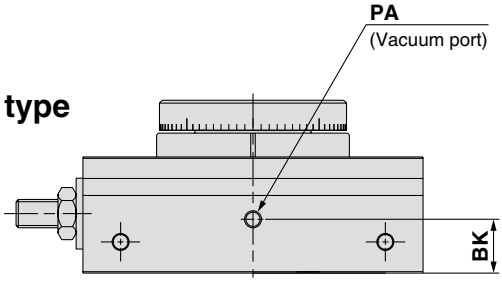

Size	BK	PA
1	5.3	M3 x 0.5
2	7.5	M3 x 0.5
3	9.5	M3 x 0.5
7	7	M5 x 0.8

Dimensions other than above are identical to the basic type and the high precision type.

Rotation Direction and Rotation Angle

• The rotary table turns in the clockwise direction when the A port is pressurized, and in the counter-clockwise direction when the B port is pressurized.
• By adjusting the adjustment bolt, the rotation end can be set within the range shown in the drawing.

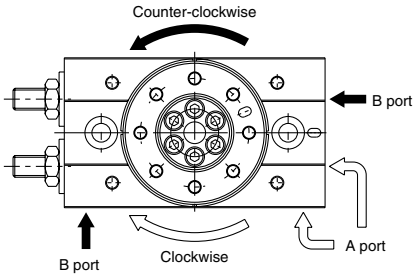

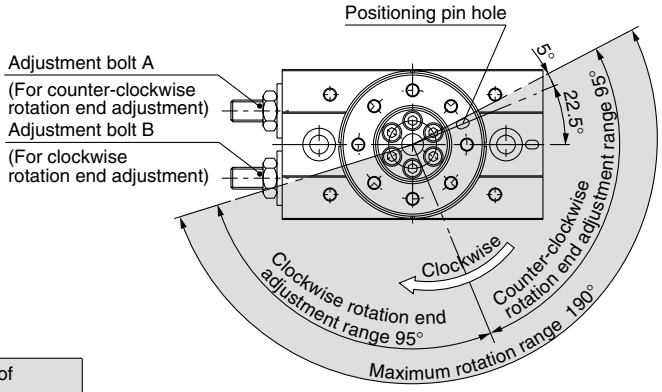

With adjust bolt, internal shock absorber

Size	Adjustment angle per rotation of angle adjustment screw
1	8.2°
2	10.0°
3	10.9°
7	10.2°

Note) • The drawing shows the rotation range of the positioning pin hole.
• The pin hole position in the drawing shows the counter-clockwise rotation end when the adjustment bolts A and B are tightened equally and the rotation is adjusted 180°.

Rotation Range Example

• Various rotation ranges are possible as shown in the drawings below using adjustment bolts A and B.
(The drawings also show the rotation ranges of the positioning pin hole.)

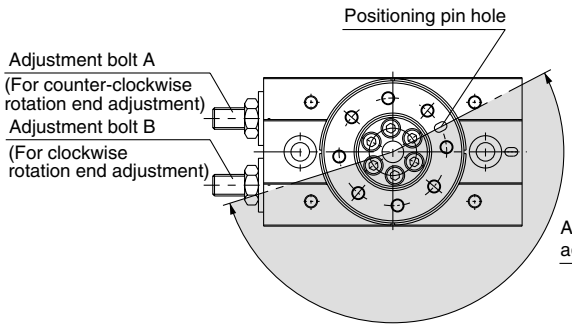

190° (Maximum) Rotation

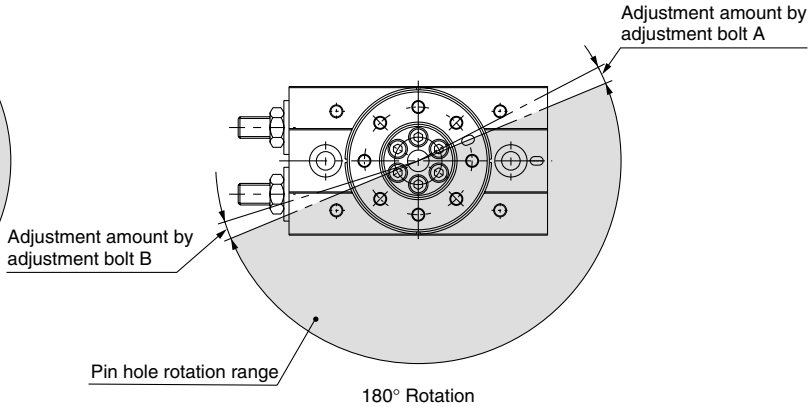

180° Rotation

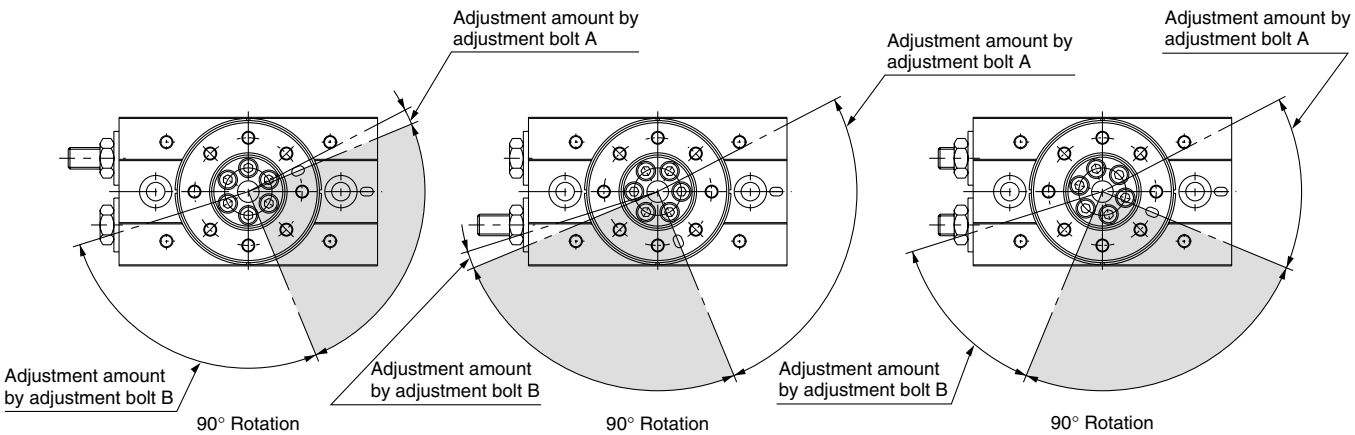

Construction

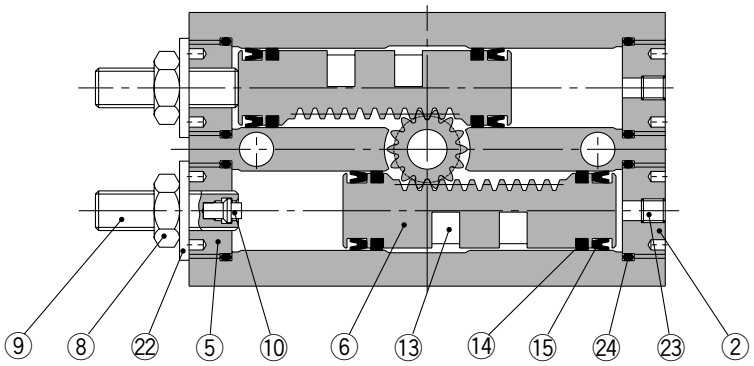

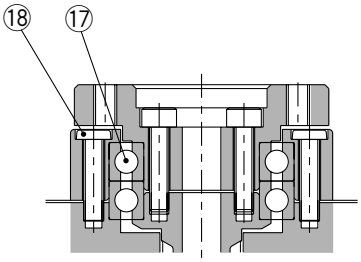

MSQA□A
(High precision type)

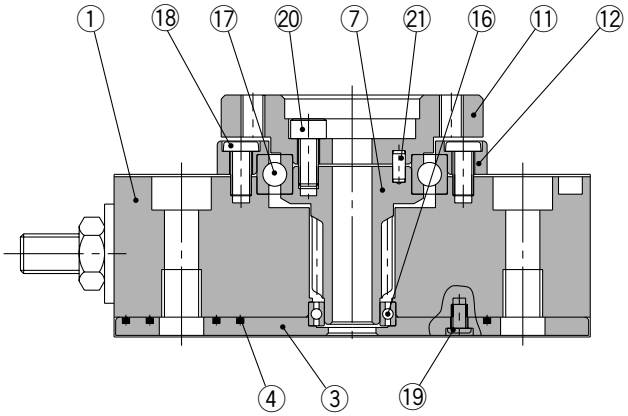

Component Parts

No.	Description			Material	Note
1	**Body**			Aluminium alloy	Anodized
2	**Cover**			Aluminium alloy	Anodized
3	**Plate**			Aluminium alloy	Chromated
4	**Seal**			NBR	
5	**End cover**			Aluminium alloy	Anodized
6	**Piston**			Stainless steel	
7	**Pinion**			Chrome molybdenum steel	
8	**Hexagon nut**			Steel wire	Nickel plated
9	**Adjustment bolt**			Steel wire	Nickel plated
10	**Cushion pad**	**Size: 3, 7**		Rubber material	
11	**Table**			Aluminium alloy	Anodized
12	**Bearing retainer**			Aluminium alloy	Anodized
13	**Magnet**			—	Chromated
14	**Wear ring**			Resin	
15	**Piston seal**			NBR	
16	**Deep groove ball bearing**			Bearing steel	
17	Deep groove ball bearing	**Basic type**		Bearing steel	
	Special bearing	**High precision type**			
18	Round head Philips screw No.0	**Basic type**	**Size: 1 to 3**	Steel wire	Nickel plated
	Round head Philips screw		**Size: 7**		Nickel plated
	Round head Philips screw	**High precision type**			Nickel plated
19	**Round head Philips screw No.0**			Steel wire	Nickel plated
20	**Hexagon socket head set bolt**			Stainless steel	
21	**Parallel pin**			Carbon steel	
22	**Seal washer**			NBR	
23	**Hexagon socket head set screw**			Stainless steel	
24	**O-ring**			NBR	

∗23 The hexagon socket head set screws are tightened at different positions depending on the position of the connecting port.

Dimensions/Size 1, 2, 3, 7

Basic type/MSQB□A

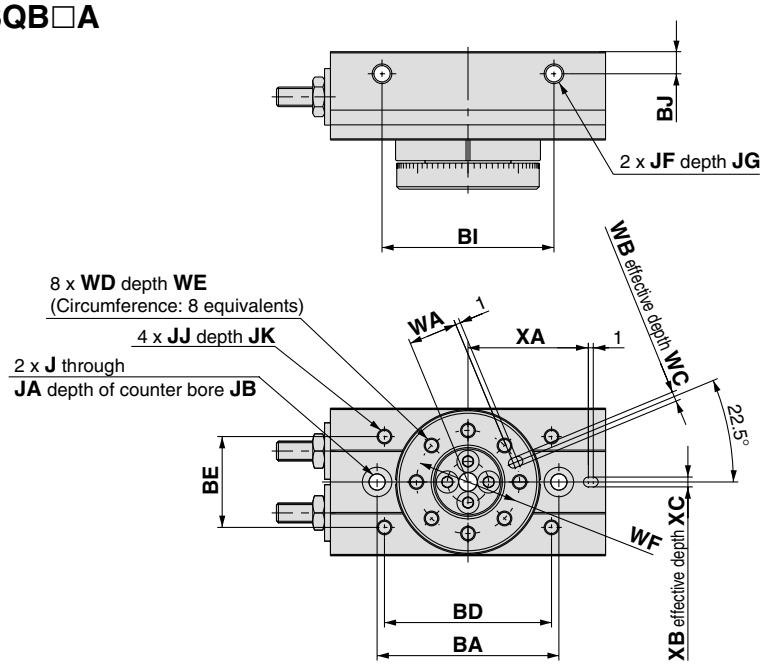

High precision type/ MSQA□A

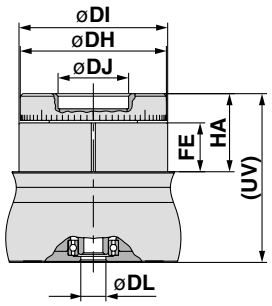

(mm)

Size	DH	DI	DJ	DL	FE	HA	UV
1	27h8	27.5h8	14H8	4.5H8	8.2	13.5	29.5
2	29h8	29.5h8	14H8	5 H8	9.7	15.5	33.5
3	33h8	34h8	17H8	6 H8	9.7	15.5	36
7	39h8	40h8	20H8	7 H8	9.5	16.5	39.5

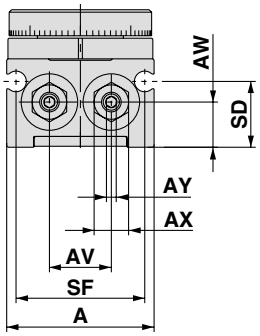

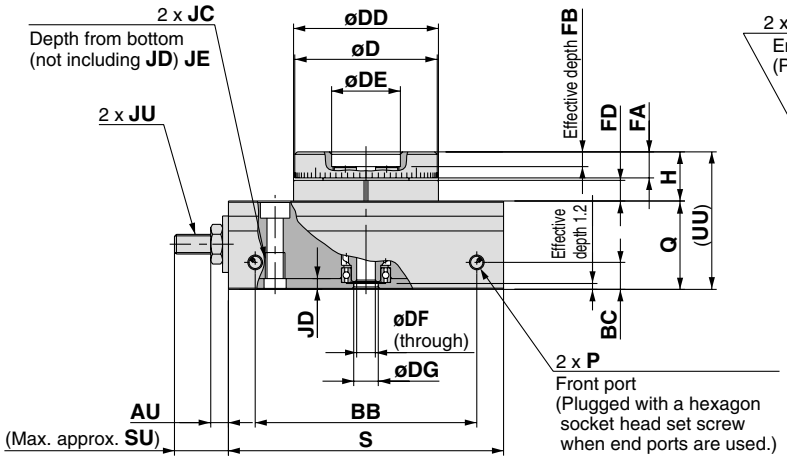

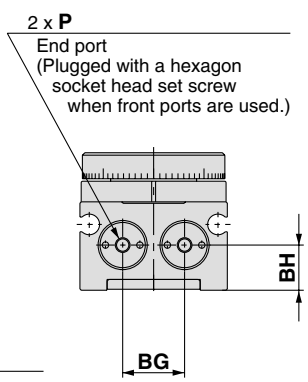

(mm)

Size	A	AU	AV	AW	AX	AY	BA	BB
1	28	2.8	11	8.2	5.5	1.5	35	39.6
2	30	3.6	12.6	9.2	7	2	37	45.1
3	34.5	4.4	15.5	10.5	8	2.5	43	46.7
7	41	4.8	18.4	12.2	10	3	50	59.2

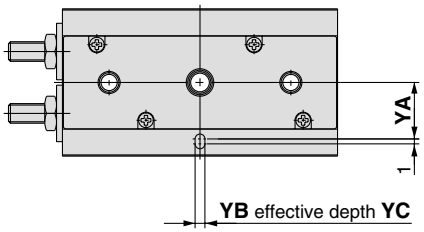

(mm)

Size	BC	BD	BE	BG	BH	BI	BJ	D	DD	DE	DF	DG	FA	FB	FD	H	J	JA	JB	JC	JD	JE	JF	JG
1	4.5	32	17	11	8.2	30	4.5	27h9	27.5h9	14H9	3.5	4.5H9	4.8	2	3.7	9	3.3	6	3.5	M4 x 0.7	2.2	5.3	M4 x 0.7	4
2	5.5	34	18.5	12.6	9.2	35	4.5	29h9	29.5h9	14H9	3.8	5 H9	5.3	2.5	4.2	10	3.3	6	3.5	M4 x 0.7	2.2	5.3	M4 x 0.7	4
3	5.5	38	23	15.5	10.5	40	4.5	33h9	34 h9	17H9	5	6 H9	5.3	2.5	4.2	10	4.2	7.5	4.5	M5 x 0.8	2.5	6	M4 x 0.7	4
7	5.5	45	30	18.4	12.2	50	5	39h9	40 h9	20H9	6	7 H9	6.5	2.5	4.5	11.5	4.2	7.5	4.5	M5 x 0.8	2.5	6	M5 x 0.8	5

(mm)

Size	JJ	JK	JU	P	Q	S	SD	SF	SU	UU	WA	WB	WC	WD	WE	WF	XA	XB	XC	YA	YB	YC
1	M3 x 0.5	3.5	M3 x 0.5	M3 x 0.5	16	50.5	10.8	24.4	9.4	25	9.5	2H9	2	M3 x 0.5	4.8	20	22.5	2H9	2	11	2H9	2
2	M3 x 0.5	3.5	M4 x 0.7	M3 x 0.5	18	56	13.4	26.2	11.3	28	10	2H9	2	M3 x 0.5	5.3	21	24.5	2H9	2	11.5	2H9	2
3	M3 x 0.5	3.5	M5 x 0.8	M3 x 0.5	20.5	60	15.2	31	11.8	30.5	12	2H9	2	M3 x 0.5	5.3	25	27	2H9	2	13.5	2H9	2
7	M4 x 0.7	4.5	M6 x 1	M5 x 0.8	23	73.5	15.4	37.4	14.9	34.5	14	3H9	3	M4 x 0.7	6.5	29	32.5	3H9	3	15.5	3H9	3

Rotary Table/Rack & Pinion Style

Series MSQ

Size: 10, 20, 30, 50, 70, 100, 200

How to Order

High Precision Type MSQ A 10 A – M9BW □ □

Basic Type MSQ B 10 A – M9BW □ □

Size

10
20
30
50

Size

10
20
30
50
70
100
200

A	With adjustment bolt
R	With internal shock absorber

Thread type

End port type		Size
Nil	M 5	10, 20
Nil	Rc 1/8	30, 50,
-XF	G 1/8	70, 100,
-XN	NPT 1/8	200

∗ Side ports are all M5.

Number of auto switches

Nil	2 pcs.
S	1 pc.
n	n pcs.

Auto switch type

Nil	Without auto switch (built-in magnet)

∗ Refer to the table below for auto switch types.

Applicable Auto Switch/Refer to pages 761 to 809 for detailed auto switch specification.

Type	Special function	Electrical entry	Indicator light	Wiring (Output)	Load voltage DC		Load voltage AC	Auto switch model Perpendicular	Auto switch model In-line	Lead wire length (m) 0.5 (Nil)	1 (M)	3 (L)	5 (Z)	Pre-wired connector	Applicable load	
Solid state switch	—	Grommet	Yes	3-wire (NPN)	24 V	5 V, 12 V	—	**M9NV**	**M9N**	●	●	●	○	○	IC circuit	Relay, PLC
				3-wire (PNP)				**M9PV**	**M9P**	●	●	●	○	○		
				2-wire		12 V		**M9BV**	**M9B**	●	●	●	○	○	—	
	Diagnostic indication (2-color display)			3-wire (NPN)		5 V, 12 V		**M9NWV**	**M9NW**	●	●	●	○	○	IC circuit	
				3-wire (PNP)				**M9PWV**	**M9PW**	●	●	●	○	○		
				2-wire		12 V		**M9BWV**	**M9BW**	●	●	●	○	○	—	
	Water resistant (2-color indication)			3-wire (NPN)		5 V, 12 V		**M9NAV**∗∗	**M9NA**∗∗	○	○	●	○	○	IC circuit	
				3-wire (PNP)				**M9PAV**∗∗	**M9PA**∗∗	○	○	●	○	○		
				2-wire		12 V		**M9BAV**∗∗	**M9BA**∗∗	○	○	●	○	○	—	
Reed switch	—	Grommet	Yes	3-wire (NPN equiv.)	—	5 V	—	**A96V**	**A96**	●	—	●	—	—	IC circuit	—
			No	2-wire	24 V	12 V	100 V	**A93V**	**A93**	●	—	●	—	—	—	Relay, PLC
							100 V or less	**A90V**	**A90**	●	—	●	—	—	IC circuit	

∗∗ Although it is possible to mount water resistant type auto switches, note that the rotary actuator itself is not of water resistant construction.

∗ Lead wire length symbols: 0.5 m ····· Nil (Example) M9NW
1 m ····· M (Example) M9NWM
3 m ····· L (Example) M9NWL
5 m ····· Z (Example) M9NWZ

∗ Auto switches marked with a "○" are produced upon receipt of orders.

∗ Auto switches are shipped together, (but not assembled).

Made to Order Refer to pages 796 and 797 for the details of solid state auto switch with pre-wired connector.

D-□

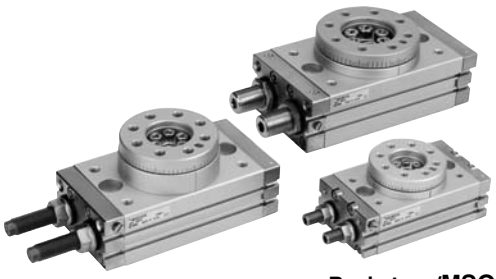

Basic type/MSQB

High precision type/MSQA

Specifications

Size			10	20	30	50	70	100	200
Fluid			Air (non-lube)						
Maximum operating pressure	With adjustment bolt		1 MPa						
	With internal shock absorber		0.6 MPa Note 1)						
Minimum operating pressure	Basic type		0.1 MPa						
	High precision type		0.2 MPa	0.1 MPa			—		
Ambient and fluid temperature			0 to 60°C (with no freezing)						
Cushion	With adjustment bolt		Rubber bumper						
	With internal shock absorber		Shock absorber						
		Shock absorber model	RBA0805 -X692	RBA1006-X692		RBA1411 -X692	RBA2015-X821		RBA2725 -X821
Angle adjustment range			0 to 190° Note 2)						
Maximum rotation			190°						
Cylinder bore size			ø15	ø18	ø21	ø25	ø28	ø32	ø40
Port size	End ports		M5 x 0.8		Rc 1/8, G 1/8, NPT 1/8				
	Side ports		M5 x 0.8						

Note 1) The maximum operating pressure of the actuator is restricted by the maximum allowable thrust of the shock absorber.

Note 2) Be careful if the rotation angle of a type with internal shock absorber is set below the value in the table below, the piston stroke will be smaller than the shock absorber's effective stroke, resulting in decreased energy absorption ability.

Size	10	20	30	50	70	100	200
Minimum rotation angle that will not allow decrease of energy absorption ability	52°	43°	40°	60°	71°	62°	82°

The service life of the shock absorber may be different from the rotary table body depending on the operating conditions. Refer to Specific Product Precautions for the suitable replacement period.

JIS symbol

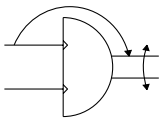

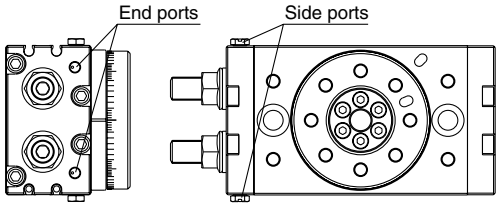

Allowable Kinetic Energy and Rotation Time Adjustment Range

Size	Allowable kinetic energy (J) Note 1)		Rotation time adjustment range for stable operation (s/90°)	
	With adjustment bolt	With internal shock absorber	With adjustment bolt	With Note 2) internal shock absorber
10	0.007	0.039	0.2 to 1.0	0.2 to 0.7
20	0.025	0.116		
30	0.048	0.116		
50	0.081	0.294		
70	0.240	1.100	0.2 to 1.5	0.2 to 1.0
100	0.320	1.600	0.2 to 2.0	
200	0.560	2.900	0.2 to 2.5	

Note 1) If operated where the kinetic energy exceeds the allowable value, this may cause damage to the internal parts and result in product failure. Please pay special attention to the kinetic energy levels when designing and during operation to avoid exceeding the allowable limit.

Note 2) When the rotation time of the type with an internal absorber is set longer than the time shown in the table above, energy absorption of the shock absorber greatly decreases.

Mass

(g)

Size		10	20	30	50	70	100	200
Basic type	With adjustment bolt	530	990	1290	2080	2880	4090	7580
	With internal shock absorber	540	990	1290	2100	2890	4100	7650
High precision type	With adjustment bolt	560	1090	1410	2240	—		
	With internal shock absorber	570	1090	1410	2260			

Note) Values above do not include auto switch mass.

Rotation Direction and Rotation Angle

- The rotary table turns in the clockwise direction where the A port is pressurized, and in the counter-clockwise direction when the B port is pressurized.
- By adjusting the adjustment bolt, the rotation end can be set within the ranges shown in the drawing.
- The rotation angle can also be set on a type with internal absorber.

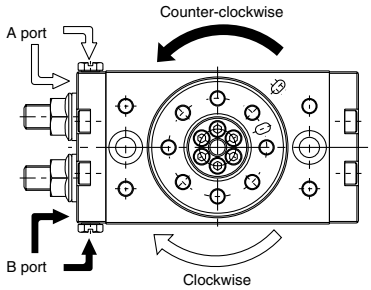

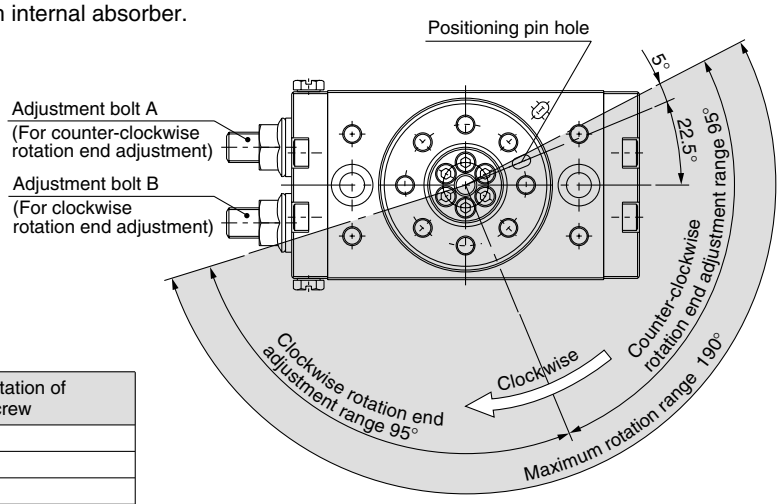

With adjust bolt, internal shock absorber

Size	Adjustment angle per rotation of angle adjustment screw
10	10.2°
20	7.2°
30	6.5°
50	8.2°
70	7.0°
100	6.1°
200	4.9°

Note) • The drawing shows the rotation range of the positioning pin hole.
• The pin hole position in the drawing shows the counter-clockwise rotation end when the adjustment bolts A and B are tightened equally and the rotation is adjusted 180°.

Rotation Range Example

- Various rotation ranges are possible as shown in the drawings below using adjustment bolts A and B. (The drawings also show the rotation ranges of the positioning pin hole.)

- The rotation angle can also be set on a type with inertial absorber.

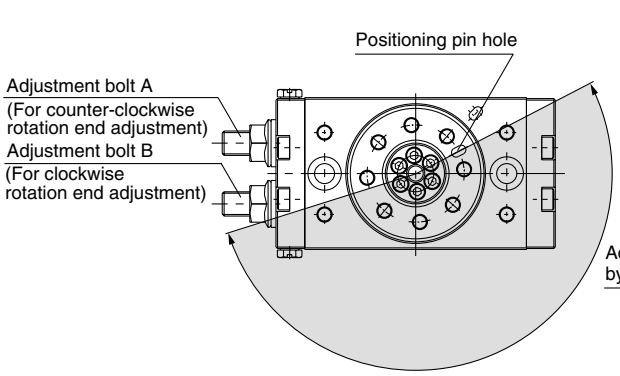

190° (Maximum) Rotation

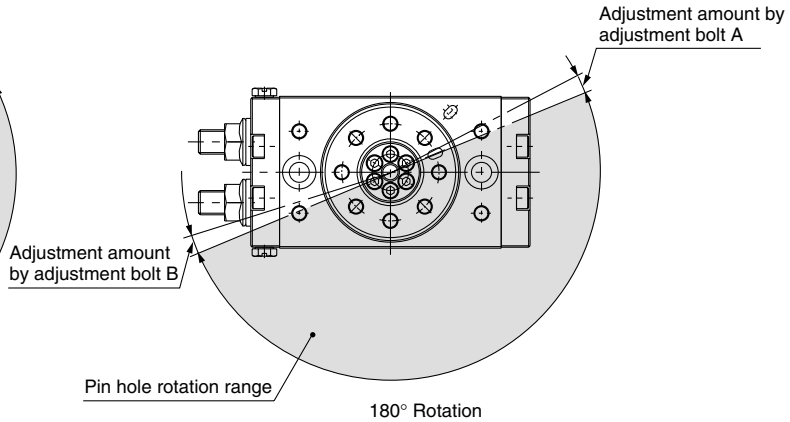

180° Rotation

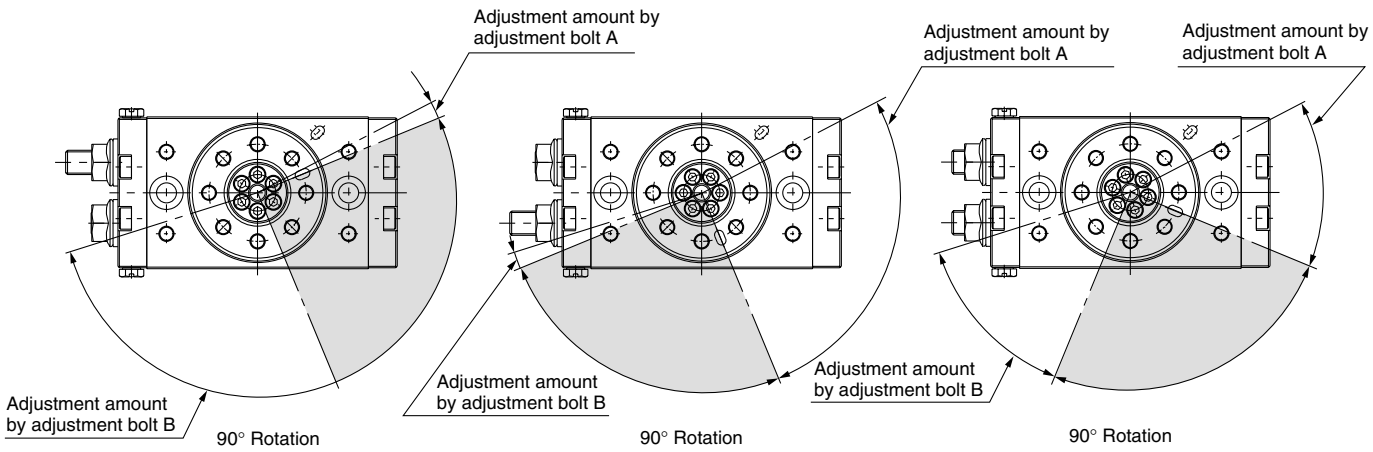

90° Rotation　90° Rotation　90° Rotation

Clean Series

Prevents dispersion of the particles generated inside of the product into the clean room by sucking them out of the vacuum port on the body side.

How to Order

11 – MSQ B 10 A – A90 S □

- **Clean series Vacuum type**
- **Size**

A	High precision type
B	Basic type

10
20
30
50

- **A** With adjustment bolt
- **R** Shock absorber

- **Auto switch type**
- **Number of auto switches**
- **Thread type**

End port type		Size
Nil	M 5	10, 20
Nil	Rc 1/8	30, 50,
-XF	G 1/8	70, 100,
-XN	NPT 1/8	200

∗ Side ports are all M5.

Specifications

Particle generation grade	Suction flow rate (example)
Grade 1 Note 1)	1 ℓ/min (ANR)

11-MSQA is identical to the high precision type and 11-MSQB is identical to the basic type.

Note) Please refer to "Pneumatic Clean Series" catalog for further details.



Dimensions

Clean series products do not have a hollow axis.

Basic type
11-MSQB□A
11-MSQB□R

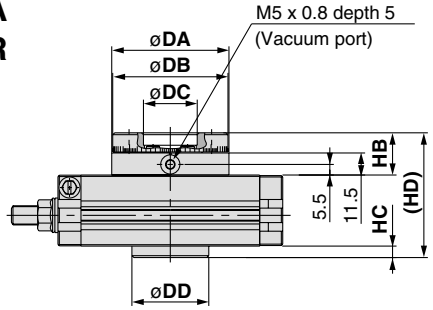

(mm)

Size	**DA**(h9)	**DB**(h9)	**DC**(H9)	**DD**(h9)	**HB**	**HC**	**HD**
10	46	45	20	35	20	5	59
20	61	60	28	40	22	6	65
30	67	65	32	48	22	6	68
50	77	75	35	54	24	7	77

Dimensions other than above are identical to the basic type.

High precision type
11-MSQA□A
11-MSQA□R

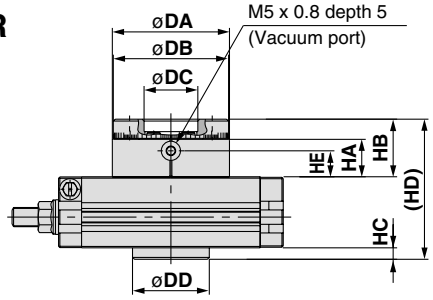

(mm)

Size	**DA**(h8)	**DB**(h8)	**DC**(H8)	**DD**(h8)	**HA**	**HB**	**HC**	**HD**	**HE**
10	46	45	20	35	15.5	24	5	63	9.5
20	61	60	28	40	19.5	30	6	73	13.5
30	67	65	32	48	19.5	30	6	76	13.5
50	77	75	35	54	21.5	34	7	87	15.5

Dimensions other than above are identical to the high precision type.

Construction

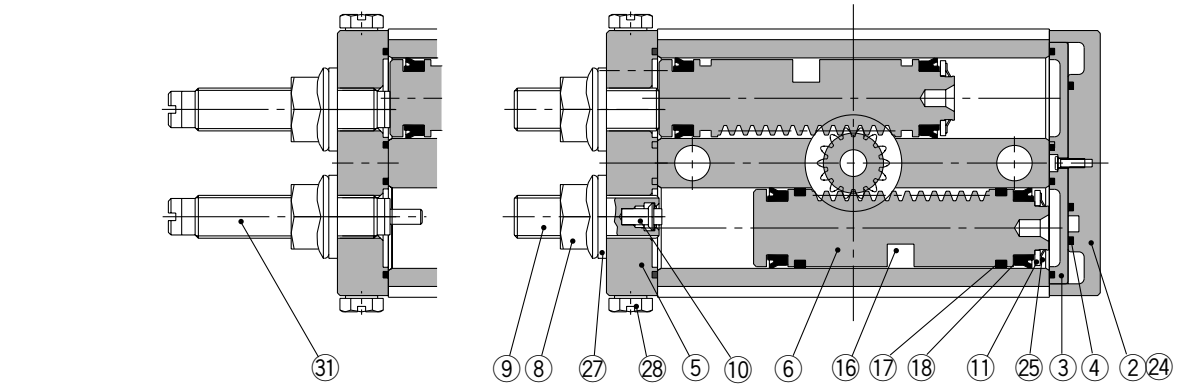

MSQ □□R
(With internal shock absorber)

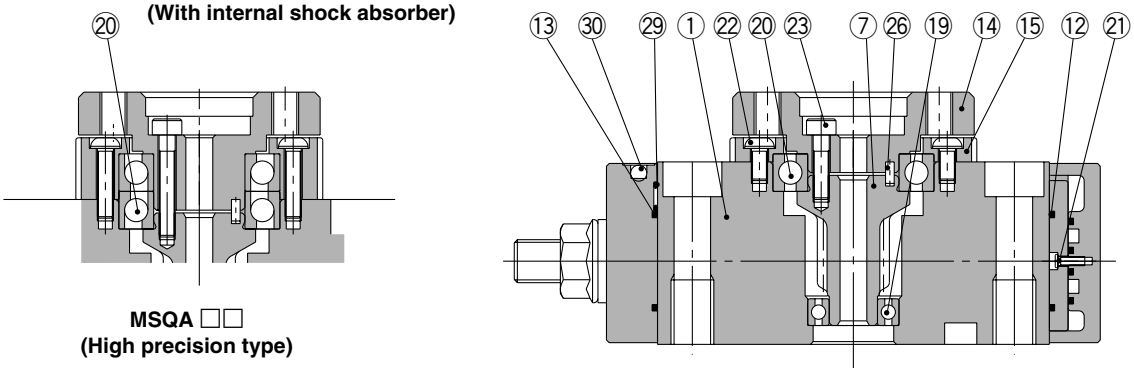

MSQA □□
(High precision type)

Parts list

No.	Description		Material	Note
1	**Body**		Aluminium alloy	Anodized
2	**Cover**		Aluminium alloy	Nickel plated
3	**Plate**		Aluminium alloy	Chromated
4	**Seal**		NBR	
5	**End cover**		Aluminium alloy	Nickel plated
6	**Piston**		Stainless steel	
7	**Pinion**		Chrome molybdenum steel	
8	**Hexagon nut with flange**	**Size: 10 to 50**	Steel wire	Nickel plated
	Hexagon nut	**Size: 70 to 200**		Nickel plated
9	**Adjustment bolt**		Chrome molybdenum steel	Nickel plated
10	**Cushion pad**		Rubber material	
11	**Seal retainer**		Aluminium alloy	Chromated
12	**Gasket**		NBR	
13	**Gasket**		NBR	
14	**Table**		Aluminium alloy	Anodized
15	**Bearing retainer**		Aluminium alloy	Anodized
16	**Magnet**		—	Chromated
17	**Wear ring**		Resin	
18	**Piston seal**		NBR	

No.	Description		Material	Note
19	**Deep groove ball bearing**	**Size: 10 to 50**	Bearing steel	
	Needle bearing	**Size: 70 to 200**		
20	**Deep groove ball bearing**	**Basic type**	Bearing steel	
	Angular contact ball bearing	**High precision type**		
21	**Round head philips screw No.0**	**Size: 20 to 50**	Steel wire	Chromated
		Size: 70 to 200	Stainless steel	
22	**Round head philips screw**	**Size: 10**	Stainless steel	
	Low head cap screw	**Size: 20 to 50**	Chrome molybdenum steel	Nickel plated
	Hexagon socket head set bolt	**Size: 70 to 200**		Nickel plated
23	**Hexagon socket head set bolt**		Stainless steel	
24	**Hexagon socket head set bolt**	**Size: 10 to 50**	Stainless steel	
		Size: 70 to 200	Carbon steel	Nickel plated
25	**Type CS retaining ring**		Spring steel	
26	**Parallel pin**	**Size: 10 to 50**	Carbon steel	
	Parallel key	**Size: 70 to 200**		
27	**Seal washer**		NBR	
28	**Plug**		Brass	
29	**O-ring**	**Size: 70 to 200 only**	NBR	
30	**Steel balls**	**Size: 70 to 200 only**	Stainless steel	
31	**Shock absorber**		—	

Replacement parts

Description	Size																									
	10			**20**			**30**			**50**			**70**			**100**			**200**								
Seal kit	P523010-5			P523020-5			P523030-5			P523040-5			P391050-5			P391060-5			P391070-5							
Parts included in seal kit	No.	Description	Qty.	No.	Description	Qty.	No.	Description	Qty.	No.	Description	Qty.	No.	Description	Qty.	No.	Description	Qty.	No.	Description	Qty.	No.	Description	Qty.	No.	Description	Qty.
	4	**Seal**	1	4	**Seal**	1	4	**Seal**	1	4	**Seal**	1	4	**Seal**	1	4	**Seal**	1	4	**Seal**	1	4	**Seal**	1	4	**Seal**	1
	12	**Gasket**	1	12	**Gasket**	1	12	**Gasket**	1	12	**Gasket**	1	12	**Gasket**	4	12	**Gasket**	4	12	**Gasket**	4	12	**Gasket**	4	12	**Gasket**	4
	13	**Gasket**	1	13	**Gasket**	1	13	**Gasket**	1	13	**Gasket**	1	17	**Wear ring**	4	17	**Wear ring**	4	17	**Wear ring**	4	17	**Wear ring**	4	17	**Wear ring**	4
	17	**Wear ring**	4	17	**Wear ring**	4	17	**Wear ring**	4	17	**Wear ring**	4	18	**Piston seal**	4	18	**Piston seal**	4	18	**Piston seal**	4	18	**Piston seal**	4	18	**Piston seal**	4
	18	**Piston seal**	4	18	**Piston seal**	4	18	**Piston seal**	4	18	**Piston seal**	4	27	**Seal washer**	2	27	**Seal washer**	2	27	**Seal washer**	2	27	**Seal washer**	2	27	**Seal washer**	2
	27	**Seal washer**	2	27	**Seal washer**	2	27	**Seal washer**	2	27	**Seal washer**	2	29	**O-ring**	4	29	**O-ring**	4	29	**O-ring**	4	29	**O-ring**	4	29	**O-ring**	4

A grease pack (10 g) is included. When only a grease pack is needed, order with the following part number.
Grease pack part no: GR-S-010 (10g)

Dimensions/Size 10, 20, 30, 50

Basic type/MSQB□A

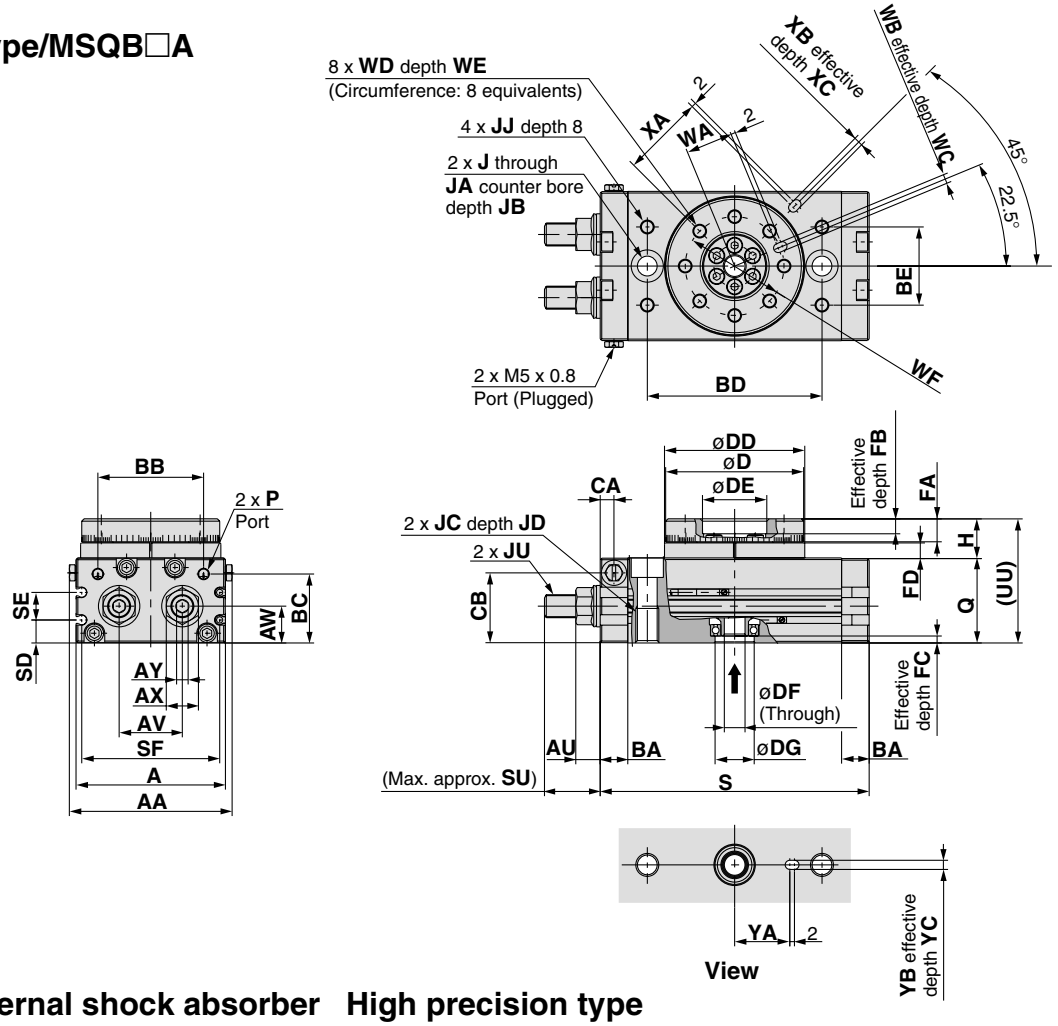

With internal shock absorber
MSQA□R
MSQB□R

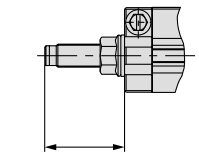

(mm)

Size	FU
10	31.5
20	34.7
30	34.7
50	51.7

High precision type
MSQA□A/With adjustment bolt
MSQA□R/With internal shock absorber

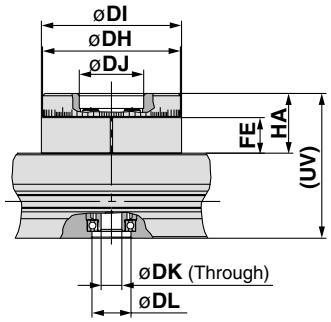

(mm)

Size	DH	DI	DJ	DK	DL	FE	HA	UV
10	45h8	46h8	20H8	5	15H8	10	18.5	52.5
20	60h8	61h8	28H8	9	17H8	15.5	26	63
30	65h8	67h8	32H8	9	22H8	16.5	27	67
50	75h8	77h8	35H8	10	26H8	17.5	30	76

(mm)

Size	AA	A	AU	AV	AW	AX	AY	BA	BB	BC	BD	BE	CA	CB	D	DD	DE	DF	DG	FA	FB	FC	FD	H	J	JA	JB
10	55.4	50	8.6	20	15.5	12	4	9.5	34.5	27.8	60	27	4.5	28.5	45h9	46h9	20H9	5	15H9	8	4	3	4.5	13	6.8	11	6.5
20	70.8	65	10.6	27.5	16	14	5	12	46	30	76	34	6	30.5	60h9	61h9	28H9	9	17H9	10	6	2.5	6.5	17	8.6	14	8.5
30	75.4	70	10.6	29	18.5	14	5	12	50	32	84	37	6.5	33.5	65h9	67h9	32H9	9	22H9	10	4.5	3	6.5	17	8.6	14	8.5
50	85.4	80	14	38	22	19	6	15.5	63	37.5	100	50	10	37.5	75h9	77h9	35H9	10	26H9	12	5	3	7.5	20	10.5	18	10.5

(mm)

Size	JC	JD	JJ	JU	P	Q	S	SD	SE	SF	SU	UU	WA	WB	WC	WD	WE	WF	XA	XB	XC	YA	YB	YC
10	M8 x 1.25	12	M5 x 0.8	M8 x 1	M5 x 0.8	34	92	9	13	45	17.7	47	15	3H9	3.5	M5 x 0.8	8	32	27	3H9	3.5	19	3H9	3.5
20	M10 x 1.5	15	M6 x 1	M10 x 1	M5 x 0.8	37	117	10	12	60	25	54	20.5	4H9	4.5	M6 x 1	10	43	36	4H9	4.5	24	4H9	4.5
30	M10 x 1.5	15	M6 x 1	M10 x 1	Rc 1/8*	40	127	11.5	14	65	25	57	23	4H9	4.5	M6 x 1	10	48	39	4H9	4.5	28	4H9	4.5
50	M12 x 1.75	18	M8 x 1.25	M14 x 1.5	Rc 1/8*	46	152	14.5	15	75	31.4	66	26.5	5H9	5.5	M8 x 1.25	12	55	45	5H9	5.5	33	5H9	5.5

* In addition to Rc 1/ 8, G 1/ 8 and NPT 1/ 8 are also available.

Dimensions/Size 70, 100, 200

Basic type/MSQB□A

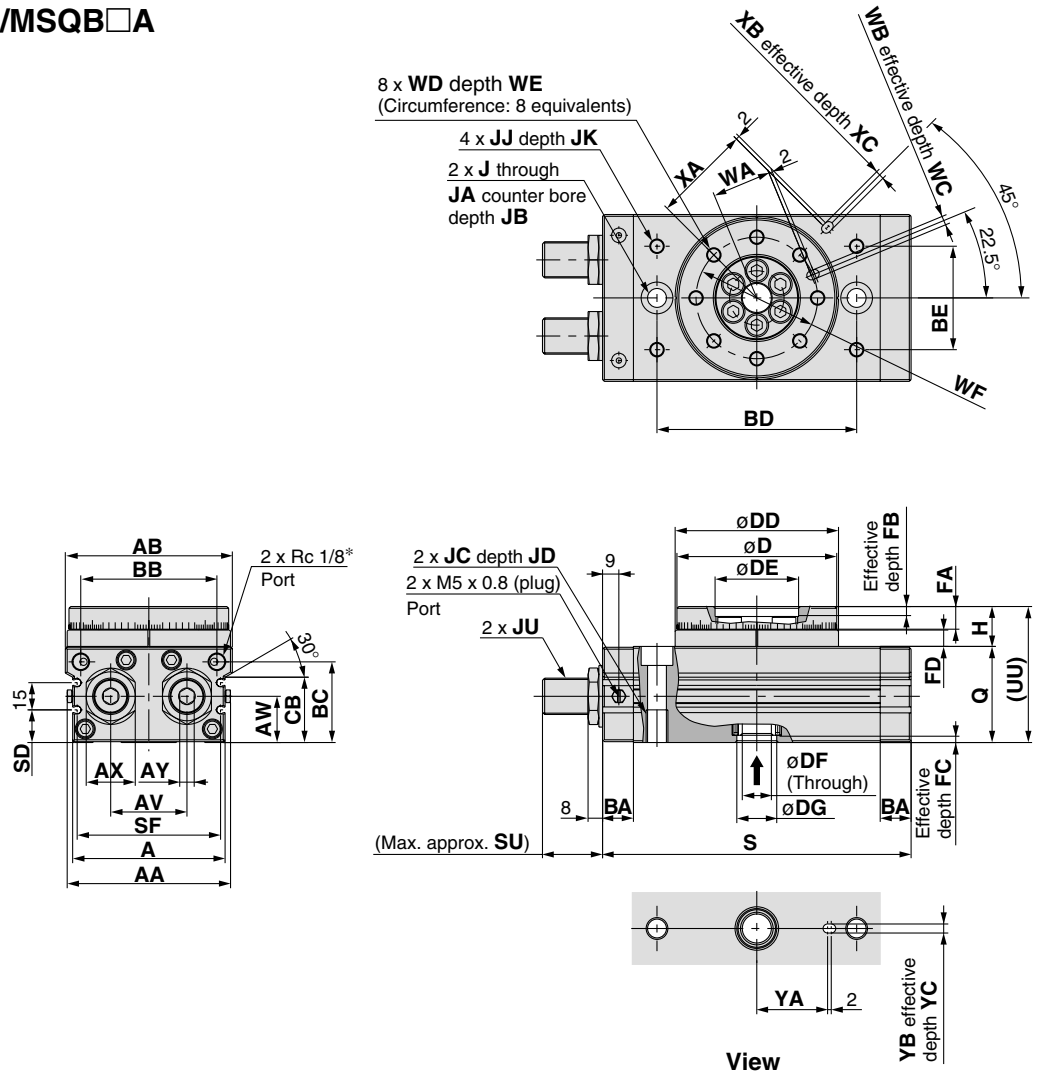

With shock absorber MSQB□R

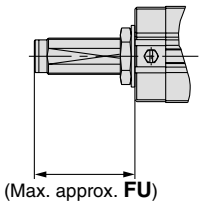

(mm)

Size	FU
70	55.4
100	55.5
200	79.5

(mm)

Size	AA	AB	A	AV	AW	AX	AY	BA	BB	BC	BD	BE	CB	D	DD	DE	DF	DG	FA	FB	FC	FD	H	J	JA	JB
70	90	92	84	42	25.5	27	8	17	75	44.5	110	57	36	88h9	90h9	46H9	16	22H9	12.5	5	3.5	9	22	10.4	17.5	10.5
100	101	102	95	50	29.5	27	8	17	85	50.5	130	66	42	98h9	100h9	56H9	19	24H9	14.5	6	3.5	12	27	10.4	17.5	10.5
200	119	120	113	60	36.5	36	10	24	103	65.5	150	80	57	116h9	118h9	64H9	24	32H9	16.5	9	5.5	15	32	14.2	20	12.5

(mm)

Size	JC	JD	JJ	JK	JU	Q	S	SD	SF	SU	UU	WA	WB	WC	WD	WE	WF	XA	XB	XC	YA	YB	YC
70	M12 x 1.75	18	M8 x 1.25	10	M20 x 1.5	53	170	18	79	34.2	75	32.5	5H9	5.5	M8 x 1.25	12.5	67	54	5H9	3.5	39	5H9	3.5
100	M12 x 1.75	18	M8 x 1.25	10	M20 x 1.5	59	189	22	90	34.3	86	37.5	6H9	6.5	M10 x 1.5	14.5	77	59	6H9	4.5	49	6H9	4.5
200	M16 x 2	25	M12 x 1.75	13	M27 x 1.5	74	240	29	108	40.2	106	44	8H9	8.5	M12 x 1.75	16.5	90	69	8H9	4.5	54	8H9	6.5

* In addition to Rc 1/ 8, G 1/ 8 and NPT 1/ 8 are also available.

Rotary Table/Rack & Pinion Style

Series MSQ

With External Shock Absorber

Size: 10, 20, 30, 50

How to Order

MSQ B 10 L 2 – M9BW S

A High precision type
B Basic type

Size
10
20
30
50

Shock absorber type
L Shock absorber for low energy
H Shock absorber for high energy

Port location/Rotation

2	Standard type	180°
3		90°
4	Symmetric type	180°
5		90°

Refer to the table to the right.

Auto switch type
Nil Without auto switch (Built-in magnet)
∗Refer to the table below for auto switch types.

Number of auto switch

Nil	2 pcs.
S	1 pc.
n	n pcs.

Thread type

End port type		Size
Nil	M 5	10, 20
Nil	Rc 1/8	30, 50
-XF	G 1/8	
-XN	NPT 1/8	

∗ Side ports are all M5.

Port location/Rotation

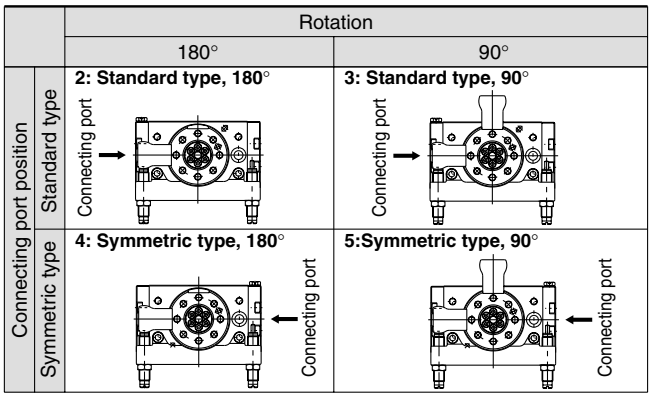

Applicable Auto Switch/Refer to pages 761 to 809 for detailed auto switch specification.

Type	Special function	Electrical entry	Indicator light	Wiring (Output)	Load voltage DC		Load voltage AC	Auto switch model Perpendicular	Auto switch model In-line	Lead wire length (m) 0.5 (Nil)	1 (M)	3 (L)	5 (Z)	Pre-wired connector	Applicable load	
Solid state switch	—	Grommet	Yes	3-wire (NPN)	24 V	5 V, 12 V	—	**M9NV**	**M9N**	●	●	●	○	○	IC circuit	Relay, PLC
				3-wire (PNP)				**M9PV**	**M9P**	●	●	●	○	○		
				2-wire		12 V		**M9BV**	**M9B**	●	●	●	○	○	—	
	Diagnostic indication (2-color display)			3-wire (NPN)		5 V, 12 V		**M9NWV**	**M9NW**	●	●	●	○	○	IC circuit	
				3-wire (PNP)				**M9PWV**	**M9PW**	●	●	●	○	○		
				2-wire		12 V		**M9BWV**	**M9BW**	●	●	●	○	○	—	
	Water resistant (2-color indication)			3-wire (NPN)		5 V, 12 V		**M9NAV**∗∗	**M9NA**∗∗	○	○	●	○	○	IC circuit	
				3-wire (PNP)				**M9PAV**∗∗	**M9PA**∗∗	○	○	●	○	○		
				2-wire		12 V		**M9BAV**∗∗	**M9BA**∗∗	○	○	●	○	○	—	
Reed switch	—	Grommet	Yes	3-wire (NPN equiv.)	—	5 V	—	**A96V**	**A96**	●	—	●	—	—	IC circuit	—
			No	2-wire	24 V	12 V	100 V	**A93V**	**A93**	●	—	●	—	—	—	Relay, PLC
							100 V or less	**A90V**	**A90**	●	—	●	—	—	IC circuit	

∗∗ Although it is possible to mount water resistant type auto switches, note that the rotary actuator itself is not of water resistant construction.
∗ Lead wire length symbols: 0.5 m ····· Nil (Example) M9NW
1 m ····· M (Example) M9NWM
3 m ····· L (Example) M9NWL
5 m ····· Z (Example) M9NWZ
∗ Auto switches are shipped together, (but not assembled).
∗ Auto switches marked with a "○" are produced upon receipt of orders.

Made to Order Refer to pages 796 and 797 for the details of solid state auto switch with pre-wired connector.

SMC



JIS symbol

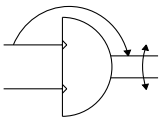

Specifications

Size		10	20	30	50
Fluid		Air (non-lube)			
Maximum operating pressure		1 MPa			
Minimum operating pressure		0.2 MPa			
Ambient and fluid temperature		0 to 60°C (with no freezing)			
Cushion		Shock absorber			
Shock absorber type	For low energy	RB0805	RB1006		RB1411
	For high energy	RB0806	RB1007		RB1412
Rotation		90°, 180°			
Angle adjusting range		Each rotation end ±3°			
Cylinder bore size		ø15	ø18	ø21	ø25
Port size	End ports	M5 x 0.8		Rc 1/8, G 1/8, NPT 1/8	
	Side ports	M5 x 0.8			

The service life of the shock absorber may be different from the rotary table body depending on the operating conditions. Refer to Specific Product Precautions for the suitable replacement period.

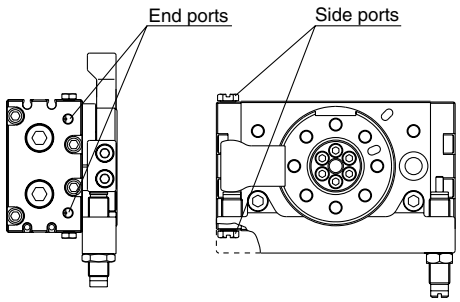

Allowable Kinetic Energy and Rotation Time Adjustment Range

Size	Allowable kinetic energy (J) Note 1)		Rotation time adjustment range for stable operation (s/90°)
	Shock absorber for low energy	Shock absorber for high energy	
10	0.161	0.231	0.2 to 1.0 Note 2)
20	0.574	1.060	
30	0.805	1.210	
50	1.310	1.820	

Note 1) If operated where the kinetic energy exceeds the allowable value, this may cause damage to the internal parts and result in product failure. Please pay special attention to the kinetic energy levels when designing and during operation to avoid exceeding the allowable limit.

Note 2) Values above indicate the time between the start of rotation and the deceleration caused by the shock absorber. Although the time required by the rotary table to reach the rotation end after deceleration differs depending on the operating conditions (inertial moment of the load, rotation speed and operating pressure), approximately 0.2 to 2 seconds are required. The range of angles within which the shock absorber operates is between the rotation end and the values shown below.

Size	10	20	30	50
For low energy	7.1°	6.9°	6.2°	9.6°
For high energy	8.6°	8.0°	7.3°	10.5°

Mass

(g)

Size		10	20	30	50
Basic type	90° specification	630	1200	1520	2480
	180° specification	600	1140	1450	2370
High precision type	90° specification	700	1390	1750	2810
	180° specification	670	1340	1680	2690

Note) Values above do not include auto switch mass.

Rotation Direction and Rotation Angle

- The rotary table turns in the clockwise direction where the A port is pressurized, and in the counter-clockwise direction when the B port is pressurized.
- By adjusting the shock absorber, the rotation end can be set within the ranges shown in the drawing.

Standard type

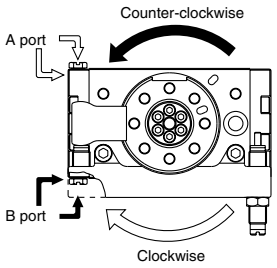

For 180°

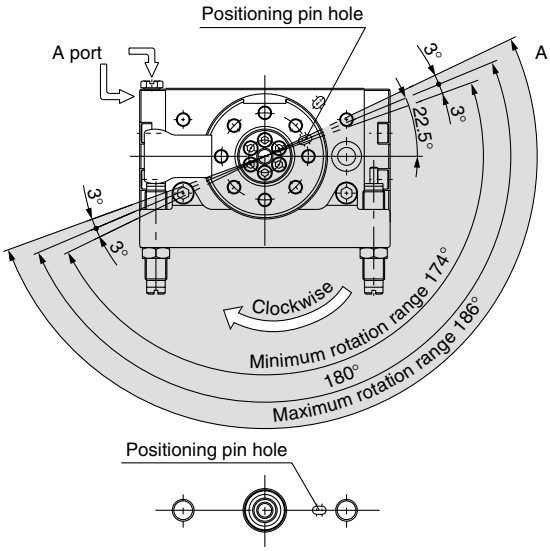

Position of bottom positioning pin hole

For 90°

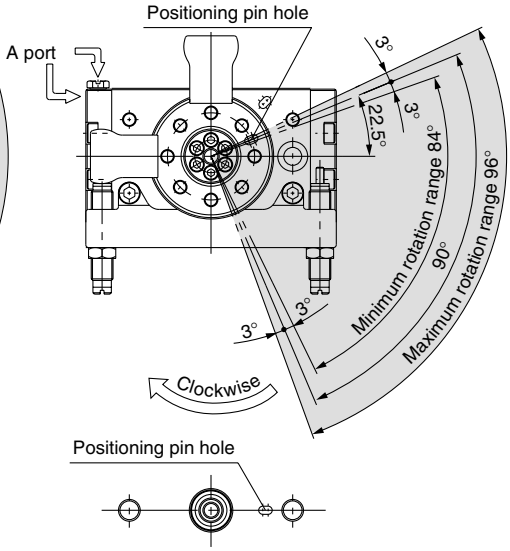

Position of bottom positioning pin hole

Symmetric type

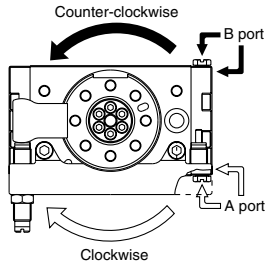

For 180°

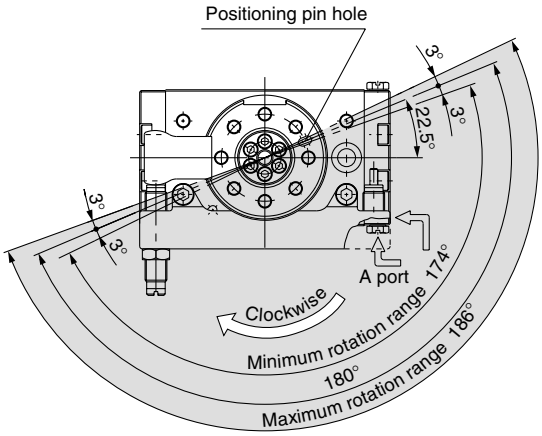

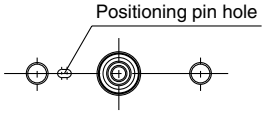

Position of bottom positioning pin hole

For 90°

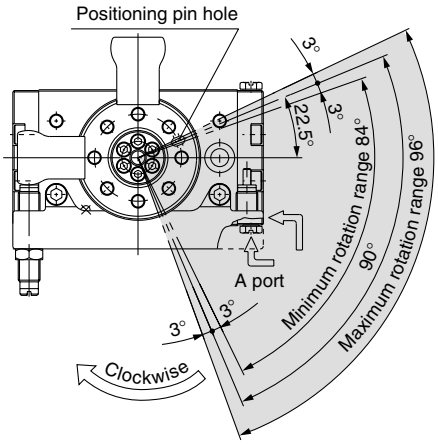

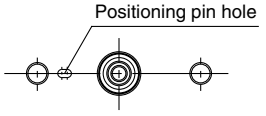

Position of bottom positioning pin hole

With external shock absorber

Size	Adjustment angle per rotation of angle adjustment screw
10	1.4°
20	1.2°
30	1.1°
50	1.3°

Note) · The drawings show the rotation range for the top positioning pin hole of the table.
· The pin hole position in the drawing shows the counter-clockwise rotation end when the shock absorbers are tightened equally and the rotation is adjusted to 180° and 90°.

Construction

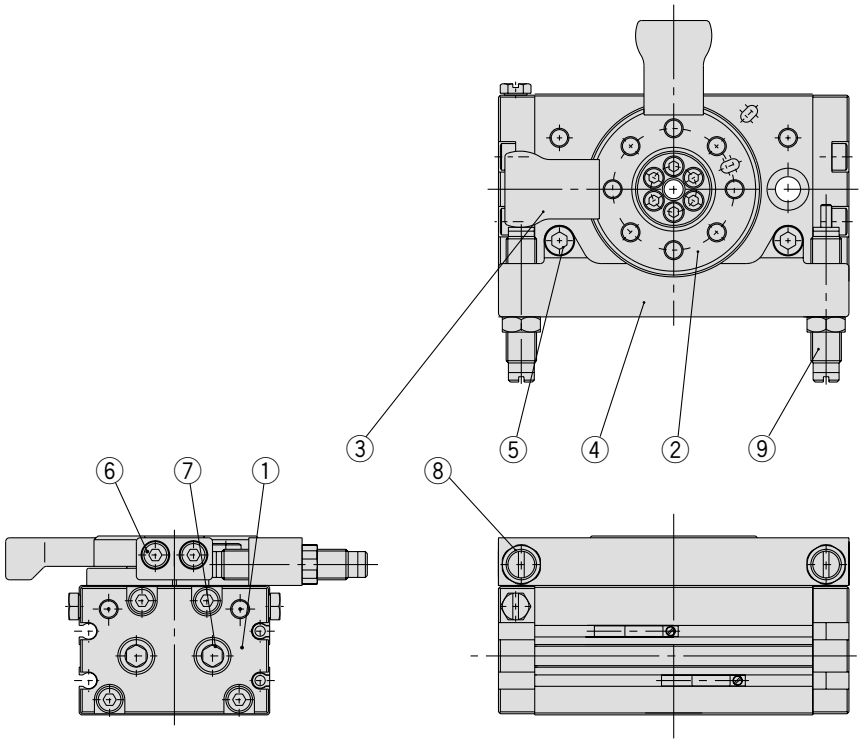

Component parts

No.	Description	Material	Note
1	**End cover**	Aluminium alloy	Nickel plated
2	**Table**	Aluminium alloy	Nickel plated
3	**Arm**	Chrome molybdenum steel	Nickel plated
4	**Shock absorber holder**	Aluminium alloy	Anodized
5	**Hexagon socket head set bolt**	Stainless steel	
6	**Hexagon socket head set bolt**	Stainless steel	
7	**Taper plug**	Steel wire	Nickel plated
8	**Hexagon nut**	Steel wire	Nickel plated
9	**Shock absorber**	—	

Replacement parts

Description	Kit no.				Note
	10	**20**	**30**	**50**	
Seal kit	P523010-6	P523020-6	P523030-6	P523040-6	Seal washer ㉗ is excluded from the kit contents described on page 285.

A grease pack (10 g) is included. When only a grease pack is needed, order with the following part number.
Grease pack part no: GR-S-010 (10g)

Dimensions/With External Shock Absorber Size: 10, 20, 30, 50

Basic type/MSQB□$^{L}_{H}$□

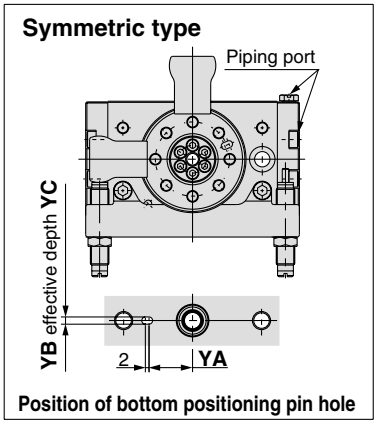

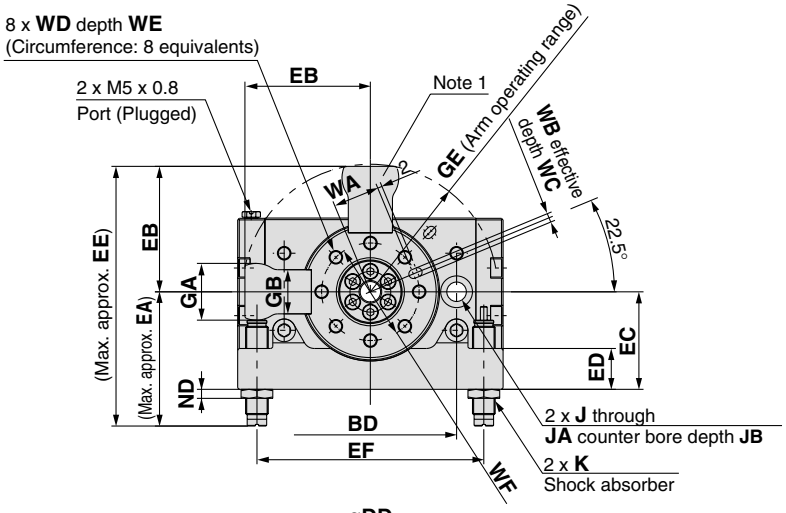

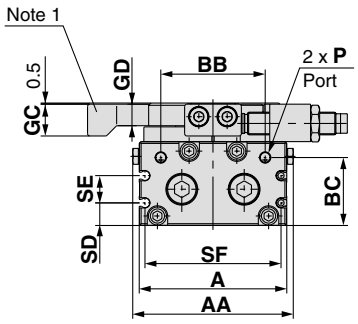

Note 1) This part is not available with 180° specification.

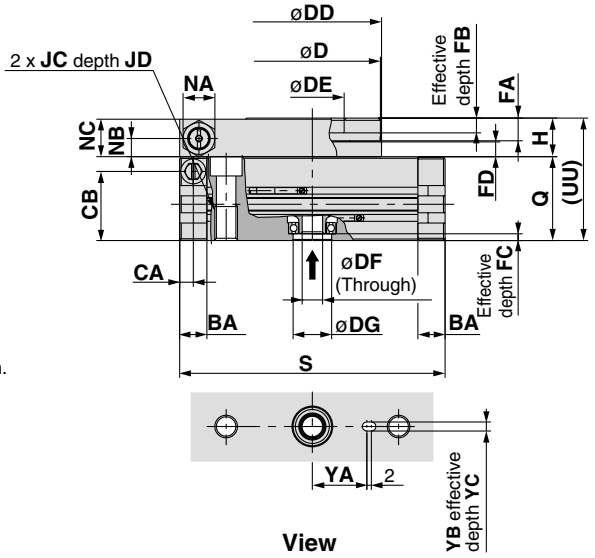

High precision type MSQA□$^{L}_{H}$□

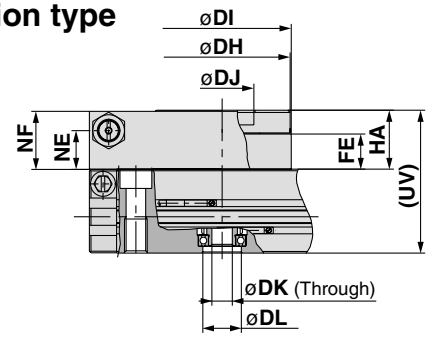

(mm)

Size	DH	DI	DJ	DK	DL	FE	HA	NE	NF	UV
10	45	46	20H8	5	15H8	10	18.5	11	18	52.5
20	60	61	28H8	9	17H8	15.5	26	17	25.5	63
30	65	67	32H8	9	22H8	16.5	27	18	26.5	67
50	75	77	35H8	10	26H8	17.5	30	18.5	29.5	76

(mm)

Size	AA	A	BA	BB	BC	BD	CA	CB	D	DD	DE	DF	DG	EA	EB	EC	ED	EE	EF	FA	FB	FC	FD	GA	GB	GC	GD	GE	H
10	55.4	50	9.5	34.5	27.8	60	4.5	28.5	45	46	20H9	5	15H9	52.9	44.3	33.5	14	97.2	80	8	4	3	4.5	20	15.6	11	7.5	45.2	13
20	70.8	65	12	46	30	76	6	30.5	60	61	28H9	9	17H9	61.8	55.3	43	18	117.1	100	10	6	2.5	6.5	25	19.5	14	9.5	56.4	17
30	75.4	70	12	50	32	84	6.5	33.5	65	67	32H9	9	22H9	63.1	60.3	46	19.5	123.4	110	10	4.5	3	6.5	27	21.5	14	9.5	61.5	17
50	85.4	80	15.5	63	37.5	100	10	37.5	75	77	35H9	10	26H9	86.7	71.4	56	22	158.1	130	12	5	3	7.5	32	28	18	11.5	72.9	20

(mm)

Size	J	JA	JB	JC	JD	K	NA	NB	NC	ND	P	Q	S	SD	SE	SF	UU	WA	WB	WC	WD	WE	WF	YA	YB	YC
10	6.8	11	6.5	M8 x 1.25	12	M8 x 1	10	5.5	12.5	4	M5 x 0.8	34	92	9	13	45	47	15	3H9	3.5	M5 x 0.8	8	32	19	3H9	3.5
20	8.6	14	8.5	M10 x 1.5	15	M10 x 1	14	8	16.5	4	M5 x 0.8	37	117	10	12	60	54	20.5	4H9	4.5	M6 x 1	10	43	24	4H9	4.5
30	8.6	14	8.5	M10 x 1.5	15	M10 x 1	14	8	16.5	4	Rc 1/8*	40	127	11.5	14	65	57	23	4H9	4.5	M6 x 1	10	48	28	4H9	4.5
50	10.5	18	10.5	M12 x 1.75	18	M14 x 1.5	19	8.5	19.5	6	Rc 1/8*	46	152	14.5	15	75	66	26.5	5H9	5.5	M8 x 1.25	12	55	33	5H9	5.5

* In addition to Rc 1/ 8, G 1/ 8 and NPT 1/ 8 are also available.

Proper Auto Switch Mounting Position at Rotation End

• Size: 1 to 7

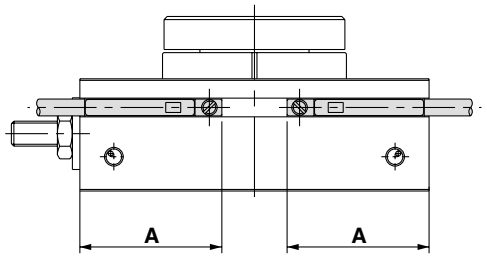

When D-M9 is used

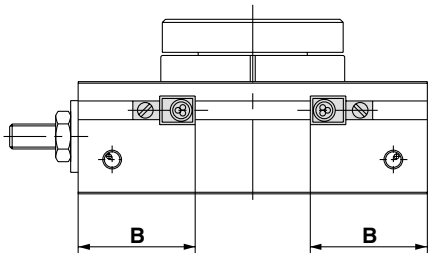

When D-F8 is used

Size	Rotation	Solid state auto switch					
		D-M9□(V), D-M9□W(V)			D-F8□		
		A	Operating angle θ m	Hysteresis angle	B	Operating angle θ m	Hysteresis angle
1	190°	20.9	45°	10°	16.9	20°	10°
2	190°	22.8	50°	10°	18.8	20°	10°
3	190°	24.4	45°	10°	20.4	15°	10°
7	190°	28.7	25°	10°	24.7	15°	10°

Operating angle θ m: Value of the operating range Lm of a single auto switch converted to an axial rotation angle.
Hysteresis angle : Value of auto switch hysteresis converted to an angle.
Note) Since the above values are only provided as a guideline, they are not guaranteed.
In the actual setting, adjust them after confirming the auto switch operating condition.

• Size: 10 to 200

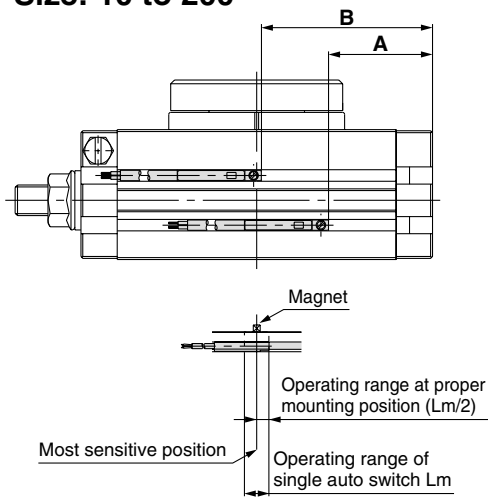

Size	Rotation	Reed auto switch				Solid state auto switch			
		D-A9□, D-A9□V				D-M9□(V), D-M9□W(V)			
		A	B	Operating angle θ m	Hysteresis angle	A	B	Operating angle θ m	Hysteresis angle
10	190°	27	45	90°	10°	31	49	55°	10°
20	190°	35	62	80°	10°	39	66	45°	10°
30	190°	39	68	65°	10°	43	72	35°	10°
50	190°	49	83	50°	10°	53	87	30°	10°
70	190°	54	95	45°	10°	58	99	25°	10°
100	190°	61	108	40°	10°	65	112	20°	10°
200	190°	81	139	35°	10°	85	143	15°	10°

Operating angle θ m: Value of the operating range Lm of a single auto switch converted to an axial rotation angle.
Hysteresis angle : Value of auto switch hysteresis converted to an angle.
Note) Since the above values are only provided as a guideline, they are not guaranteed.
In the actual setting, adjust them after confirming the auto switch operating condition.

Series MSQ
Rotary Table
Specific Product Precautions 1

Be sure to read before handling.

Speed Adjustment

⚠Warning

1. Perform speed adjustment gradually from the low speed side.

Speed adjustment from the high speed side can cause product damage leading to human injury and damage to equipment and machinery.

⚠Caution

1. When operating at high speed with a large load weight, a large amount of energy is applied to the actuator and can cause damage.

Refer to the model selection on page 20 to find the proper operating time.

2. Do not machine the fixed orifice of the port to enlarge its size. If the fixed orifice size is enlarged, the actuator operating speed and impact force will increase and cause damage.

Lubrication

⚠Caution

1. Use the product without lubrication.

This product is lubricated with grease at the factory, and further lubrication will result in a failure to meet the product's specifications.

Rotation Adjustment

⚠Caution

1. As a standard feature, the rotary table is equipped with a rotation adjustment screw (adjustment bolt or shock absorber) that can be used to adjust the rotation. The table below shows the rotation adjustment per single rotation of the rotation adjustment screw.

Please refer to following pages for the rotation direction, rotation angle and rotation angle range.

MSQ size1 to 7 → page 278
MSQ size10 to 200 → page 283
MSQ with external shock absorber → page 290

With adjustment bolt, With external shock absorber

Size	Rotation adjustment per single rotation of rotation adjustment screw
1	8.2°
2	10.0°
3	10.9°
7	10.2°
10	10.2°
20	7.2°
30	6.5°
50	8.2°
70	7.0°
100	6.1°
200	4.9°

With external shock absorber

Size	Rotation adjustment per single rotation of rotation adjustment screw
10	1.4°
20	1.2°
30	1.1°
50	1.3°

The rotation adjustment range for the external shock absorber is ±3° at each rotation end. When adjusted beyond this range, note that the shock absorber's durability may decrease.

Rotation Adjustment

⚠Caution

2. Series MSQ is equipped with a rubber bumper or shock absorber. Therefore, perform rotation adjustment in the pressurized condition (minimum operation pressure: 0.1 MPa or more for adjustment bolt and internal shock absorber types, and 0.2 MPa or more for external shock absorber type.)

Shock Absorber

⚠Caution

1. Refer to the table below for tightening torques of the shock absorber setting nut.

Size	10	20	30	50	70	100	200
Tightening torque N · m	1.67	3.14		10.8	23.5		62.8

2. Never rotate the bottom screw of the shock absorber. (It is not an adjustment screw.) This may cause oil leakage.

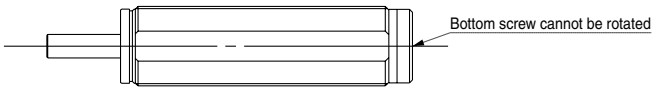

3. When rotation of the rotary table with internal shock absorber is set at a value smaller than the table below, the piston stroke becomes smaller than the shock absorber's effective stroke and energy absorption capacity decreases.

Size	10	20	30	50	70	100	200
Minimum rotation without energy absorption capacity decrease	52°	43°	40°	60°	71°	62°	82°

4. Products with shock absorber are not designed to smooth stop but to absorb the kinetic energy of the load. If the load has to be stopped smoothly, a shock absorber of the optimum size meeting the operating conditions must be installed external to the equipment.

5. Shock absorbers are consumable parts. When a decrease in energy absorption capacity is noticed, it must be replaced.

With internal shock absorber

Size	Shock absorber model
10	RBA0805-X692
20	RBA1006-X692
30	
50	RBA1411-X692
70	RBA2015-X821
100	
200	RBA2725-X821

With external shock absorber

Size	Type	Shock absorber model
10	For low energy	RB0805
	For high energy	RB0806
20	For low energy	RB1006
	For high energy	RB1007
30	For low energy	RB1006
	For high energy	RB1007
50	For low energy	RB1411
	For high energy	RB1412

Series MSQ
Rotary Table
Specific Product Precautions 2

Be sure to read before handling.

Service Life and Replacement Period of Shock Absorber

⚠Caution

1. Allowable operation time under the specifications set in this catalog is 1 million.

Note) Specified service life (suitable replacement period) is the value at room temperature (20 to 25°C). The period may vary depending on the temperature and other conditions. In some cases the absorber may need to be replaced before the allowable operation time above.

External Shock Absorber

⚠Caution

The threaded orifices shown below are not connecting ports. Never remove the plugs as this will cause malfunction.

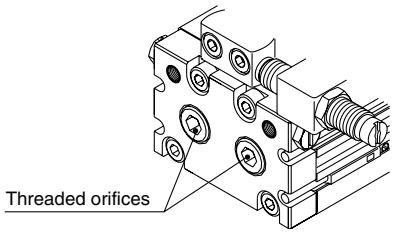

Speed Controller and Fittings

⚠Caution

Size 1, 2, and 3 use M3 x 0.5 piping ports. When connecting a speed controller or fittings directly, use the following series.

- ●Speed controller
  AS12□1F/Elbow type
  AS13□1F/Universal type
- ●One-touch fitting
  One-touch miniature fittings Series KJ
- ●Miniature fittings Series M3

Auto switch

⚠Caution

In case of sizes 1, 2, 3 and 7, when 2 pieces of auto switches are installed in one switch groove, the minimum detectable rotation angles are as follows.

Size	Minimum detectable rotation
1	25°
2	25°
3	20°
7	20°

Maintenance and Inspection

⚠Caution

Since sizes 1, 2, 3 and 7 require special tools, they cannot be disassembled.
Since sizes 10, 20, 30 and 50 have the table press fit into an angular type bearing, they cannot be disassembled.

Safety Instructions

These safety instructions are intended to prevent hazardous situations and/or equipment damage. These instructions indicate the level of potential hazard with the labels of **"Caution," "Warning"** or **"Danger."** They are all important notes for safety and must be followed in addition to International Standards (ISO/IEC), Japan Industrial Standards (JIS)*1) and other safety regulations*2).

* 1) ISO 4414: Pneumatic fluid power – General rules relating to systems.
ISO 4413: Hydraulic fluid power – General rules relating to systems.
IEC 60204-1: Safety of machinery – Electrical equipment of machines. (Part 1: General requirements)
ISO 10218-1992: Manipulating industrial robots -Safety.
JIS B 8370: General rules for pneumatic equipment.
JIS B 8361: General rules for hydraulic equipment.
JIS B 9960-1: Safety of machinery – Electrical equipment of machines. (Part 1: General requirements)
JIS B 8433-1993: Manipulating industrial robots - Safety.
etc.
* 2) Labor Safety and Sanitation Law, etc.

⚠ Caution: Operator error could result in injury or equipment damage.

⚠ Warning: Operator error could result in serious injury or loss of life.

⚠ Danger : In extreme conditions, there is a possibility of serious injury or loss of life.

⚠ Warning

1. The compatibility of the product is the responsibility of the person who designs the equipment or decides its specifications.

Since the product specified here is used under various operating conditions, its compatibility with specific equipment must be decided by the person who designs the equipment or decides its specifications based on necessary analysis and test results. The expected performance and safety assurance of the equipment will be the responsibility of the person who has determined its compatibility with the product. This person should also continuously review all specifications of the product referring to its latest catalog information, with a view to giving due consideration to any possibility of equipment failure when configuring the equipment.

2. Only personnel with appropriate training should operate machinery and equipment.

The product specified here may become unsafe if handled incorrectly. The assembly, operation and maintenance of machines or equipment including our products must be performed by an operator who is appropriately trained and experienced.

3. Do not service or attempt to remove product and machinery/equipment until safety is confirmed.

1. The inspection and maintenance of machinery/equipment should only be performed after measures to prevent falling or runaway of the driven objects have been confirmed.
2. When the product is to be removed, confirm that the safety measures as mentioned above are implemented and the power from any appropriate source is cut, and read and understand the specific product precautions of all relevant products carefully.
3. Before machinery/equipment is restarted, take measures to prevent unexpected operation and malfunction.

4. Contact SMC beforehand and take special consideration of safety measures if the product is to be used in any of the following conditions.

1. Conditions and environments outside of the given specifications, or use outdoors or in a place exposed to direct sunlight.
2. Installation on equipment in conjunction with atomic energy, railways, air navigation, space, shipping, vehicles, military, medical treatment, combustion and recreation, or equipment in contact with food and beverages, emergency stop circuits, clutch and brake circuits in press applications, safety equipment or other applications unsuitable for the standard specifications described in the product catalog.
3. An application which could have negative effects on people, property, or animals requiring special safety analysis.
4. Use in an interlock circuit, which requires the provision of double interlock for possible failure by using a mechanical protective function, and periodical checks to confirm proper operation.

Safety Instructions

⚠Caution

The product is provided for use in manufacturing industries.
The product herein described is basically provided for peaceful use in manufacturing industries.
If considering using the product in other industries, consult SMC beforehand and exchange specifications or a contract if necessary. If anything is unclear, contact your nearest sales branch.

Limited Warranty and Disclaimer/Compliance Requirements

The product used is subject to the following “Limited Warranty and Disclaimer” and “Compliance Requirements”. Read and accept them before using the product.

Limited Warranty and Disclaimer

1. **The warranty period of the product is 1 year in service or 1.5 years after the product is delivered.**∗3)
   Also, the product may have specified durability, running distance or replacement parts. Please consult your nearest sales branch.
2. **For any failure or damage reported within the warranty period which is clearly our responsibility, a replacement product or necessary parts will be provided.**
   This limited warranty applies only to our product independently, and not to any other damage incurred due to the failure of the product.
3. **Prior to using SMC products, please read and understand the warranty terms and disclaimers noted in the specified catalog for the particular products.**

∗ **3) Vacuum pads are excluded from this 1 year warranty.**
A vacuum pad is a consumable part, so it is warranted for a year after it is delivered.
Also, even within the warranty period, the wear of a product due to the use of the vacuum pad or failure due to the deterioration of rubber material are not covered by the limited warranty.

Compliance Requirements

When the product is exported, strictly follow the laws required by the Ministry of Economy, Trade and Industry (Foreign Exchange and Foreign Trade Control Law).

Rotary Actuators Precautions 1

Be sure to read this before handling.

Design / Selection

⚠Warning

1. Confirm the specifications.

Products represented in this catalog are designed only for use in compressed air systems (including vacuum).
Do not operate at pressures or temperatures, etc., beyond the range of specifications, as this can cause damage or malfunction. (Refer to the specifications.)
Please contact SMC when using a fluid other than compressed air (including vacuum).
We do not guarantee against any damage if the product is used outside of the specification range.

2. If the operation involves load fluctuations, ascending/descending movements, or changes in frictional resistance, make sure to provide safety measures.

Operating speed will increase, and bodily injury may occur, or damage to the machinery itself may occur.

3. If there is a chance that the product will pose a hazard to humans, install a protective cover.

If the moving portion of the product will pose a hazard to humans or will damage machinery or equipment, provide a construction that prevents direct contact with those areas.

4. Be certain that the secured portions will not loosen.

Be certain to adopt a reliable connecting method if the rotary actuator is used very frequently or if it is used in a location that is exposed to a large amount of vibration.

5. There may be cases in which a speed reduction circuit or a shock absorber is required.

If the driven object moves at high speeds or is heavy, it will be unfeasible for only the rotary actuator's cushion to absorb the shock. Therefore, provide a speed-reduction circuit to reduce the rotary actuator's speed before the thrust is applied to the cushion, or an external shock absorber to dampen the shock. If these countermeasures are taken, make sure to take the rigidity of the mechanical equipment into consideration.

6. Consider the possibility of a reduction in the circuit air pressure caused by a power failure.

When an actuator is used as clamping mechanism, there is a danger of workpiece dropping if there is a decrease in clamping force, due to a drop in circuit pressure caused by a power failure. Therefore, safety equipment should be installed to prevent damage to machinery and bodily injury.

7. Consider the possibility of power source related malfunctions that could occur.

For the equipment that rely on power sources such as compressed air, electricity, or hydraulic pressure, adopt a countermeasure to prevent the equipment from causing a hazard to humans or damage to the equipment in the event of malfunction.

8. If a speed controller is provided in the exhaust restrictor, implement a safety design taking the residual pressure into consideration.

If air pressure is applied to the air supply side without residual pressure in the exhaust side, the rotary actuator will operate at abnormally high speed, which could pose a hazard to humans and can damage the machinery and equipment.

9. Consider the behavior of the rotary actuator in the event of an emergency stop.

Devise a safe system so that if a person engages the emergency stop, or if a safety device is tripped during a system malfunction such as a power failure, the movement of the rotary actuator will not cause a hazard to humans or damage the equipment.

10. Consider the action of the rotary actuator when restarting after an emergency stop.

Devise a safe design so that the restarting of the rotary actuator will not pose a hazard to humans or damage the equipment. Install manually controlled equipment for safety when the actuator has to be reset to the starting position.

11. Do not use the product as a shock absorber.

If an abnormal pressure or air leakage occurs, the rotary actuator's speed reduction capability could become severely effected, which could pose a hazard to humans and damage the machinery and equipment.

12. Select a speed within the product's allowable energy value.

If the product's kinetic energy of the load exceeds the allowable value, it could damage the product, and cause a hazard to humans and damage the machinery and equipment.

13. Provide a shock absorber if the kinetic energy that is applied to the product exceeds the allowable value.

If the product's kinetic energy exceeds the allowable value, it could damage the product, and cause a hazard to humans and damage the machinery or equipment.

14. Do not stop or hold the product at midpoint by keeping air pressure in the product.

For a product lacking an external stopping mechanism, if the directional control valve is closed to keep the air pressure in the product, in an attempt to stop the product at midpoint, it might not be possible to maintain that stopped position due to an air leakage. As a result, it could pose a hazard to humans and cause damage to machinery and/or equipment.

15. Give consideration to the decline in strength caused by changes of the shaft type.

Some shaft types, such as simple specials, may have shapes and dimensions that result in decreased strength when compared with standard models. Consider this carefully when using.

16. Do not use two or more rotary actuators with the aim of synchronized movement.

One of the actuators may bear the load of operation, making synchronized movement impossible, and possibly leading to deformation of the equipment.

17. Do not use in a location where adverse effect could be occurred by the oozing of the lubricant to the exterior.

The lubricant coating the interior of the product may leak to the outside of the product from the portion of the connection of the rotary shaft, body cover, etc.

18. Do not disassemble the product or make any modifications, including additional machining.

It may cause human injury and/or an accident.

19. Refer to the Auto Switches Precautions for using with an auto switch.

Rotary Actuators Precautions 2

Be sure to read this before handling.

Design / Selection

⚠Caution

1. Do not use below the speed adjustment range specified for the product.

If the product is used below the specified speed adjustment range, it could cause the product to stick, slip, or the movement to stop.

2. Do not apply an external torque to the product that exceeds the rated output.

If an external force that exceeds the product's rated output is applied to the product, it could damage the product.

3. The holding torque of the rotating end of the double piston type.

If the internal piston of a double piston product comes in contact with the angle adjustment screen or the cover and stops, the holding torque at the rotating end is one half of the actual output.

4. If it is necessary to provide repeatability of the rotation angle, directly stop the load externally.

Even with a product that is equipped with an angle adjuster, there are times in which the initial rotation angle could change.

5. Do not use under hydraulic pressure.

The product will be damaged if it is used by applying hydraulic pressure.

6. There is a possibility of backlash being generated when stopping the double piston style in the middle with a valve of the closed center type.

7. For the vane type product, if it is necessary to ensure a rotation angle, make sure to use a minimum pressure of 0.3 MPa.

8. Do not use the made-to-order -XC30 at low speeds.

Although fluorine grease is used, it is not designed for low-speed applications.
For information on fluorine grease, refer to the Material Safety Data Sheet (MSDS).

9. Do not use in places where there are many temperature fluctuations. When using in lower temperature applications, use caution so that frost does not occur inside the cylinder or the piston rod.

Operation may be unstable.

10. Adjust the speed control in the environment in which it will be used in.

Speed adjustment may be changed if the environment is different.

Mounting

⚠Warning

1. Operation manual

Install the product and operate it only after reading the operation manual carefully and understanding its contents. Also, keep the manual in a location where it can be referred to as necessary.

Mounting

⚠Warning

2. Ensure sufficient space for maintenance activities.

When installing the products, allow access for maintenance.

3. Tighten threads with the proper tightening torque.

When installing the products, follow the listed torque specifications.

4. Before adjusting the angle by supplying air pressure, take appropriate measures to prevent the equipment from rotating unnecessarily.

When an adjustment is performed under air pressure, the equipment could rotate and fall during the adjustment, depending on the mounted placement of the equipment. As a result, it could pose a hazard to humans and damage the machinery and equipment.

5. Do not loosen the angle adjustment screw beyond the allowable adjustment range.

The angle adjustment screw could fall out if it is loosened beyond its allowable adjustment range and cause a hazard to humans and damage to machinery and equipment.

6. Do not place a magnetic object near the product.

The auto switch is a magnetic sensing type. If a magnetic object is placed close to it, the rotary actuator could operate suddenly, which could pose a hazard to humans and damage the machinery and equipment.

7. Do not perform additional machining to the product.

Additional machining to the product can result in insufficient strength and cause damage to the product. This can lead to possible human injury and damage to the surrounding equipment.

8. Do not enlarge the fixed throttle by modifying the pipe connectors.

If the hole diameter is enlarged, the product's rotation speed will increase, causing the shock force to increase and damage to the product. As a result, it could pose a hazard to humans and damage the machinery and equipment.

9. If shaft couplings are used, use those with angular freedom.

If shaft couplings that lack angular freedom are used, they could scrape due to eccentricity, leading to equipment malfunction and product damage. As a result, it could pose a hazard to humans and damage the machinery and equipment.

10. Do not apply to the shaft a load that exceeds the values given in a catalog.

If a load that exceeds the allowable value is applied to the product, it could lead to equipment malfunction, a hazard to humans, and damage to the machinery and equipment. Provided that a dynamic load is not generated, a load that is within the allowable radial/thrust load can be applied. However, applications in which the load is applied directly to the shaft should be avoided wherever possible. The methods such as those described below are recommended to prevent the load from being applied directly to the shaft in order to ensure a proper operating condition.

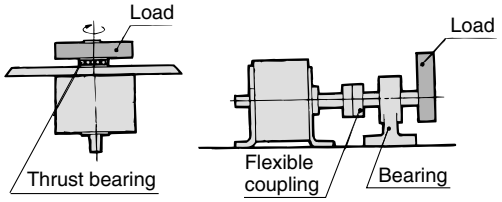

Rotary Actuators Precautions 3

Be sure to read this before handling.

Mounting

⚠Warning

11. Place an external stopper in a position that is away from the rotating shaft.

If the stopper is placed near the rotating shaft, the torque that is generated by the product itself will cause the reaction force which is directed to the stopper to be redirected and applied to the rotating shaft. This will lead to the breakage of the rotating shaft and bearing. As a result, it could pose a hazard to humans and damage the machinery and equipement.

Precautions when Using External Stoppers

- Be sure to install external stoppers in the proper places. Installation in the wrong place can result in equipment breakage, which could damage other equipment or cause human injury.

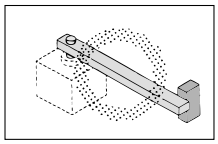

Install the stopper at a sufficient distance from the rotating shaft.

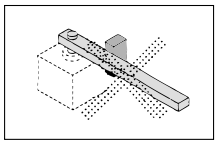

The external stopper becomes a fulcrum, resulting in the load's inertia force being applied to the shaft as a bending moment.

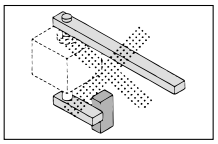

If an external stopper is installed on the shaft side which is opposite of the load, the inertia force generated by the load is applied directly to the shaft.

- Install external stoppers within the range of the rotating shaft angle.
  Installing an external stopper at the maximum rotation angle may result in inability to fully absorb the kinetic energy generated, and damage to equipment may occur.
  When using external stoppers at rotation angles of 90°, 180°, or 270°, use products with rotation angles of 100°, 190°, or 280° respectively.

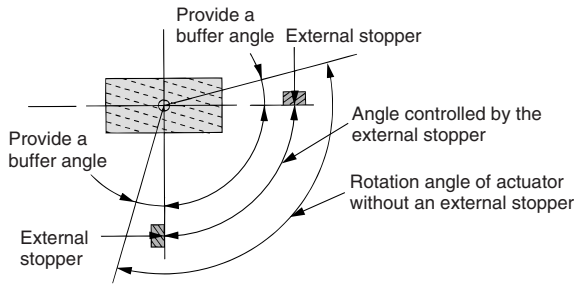

Backlash of the Single Rack Pinion Type CRA1 Series

There is a backlash of within 1° at the rotation end of the CRA1 series. It is necessary to decide the position of the external stopper when precise rotation is required.

Precautions when Converting Rotational Motion to Linear Motion

When using a link mechanism, etc., to convert rotational motion to linear motion, and determining the operation end using the stopper on the linear motion end (see below), a small value for θ at the operation end may result in the torque of the rotary actuator causing excessive radial load to act on the output axle, and equipment breakage may occur.
Install a stopper on the rotational motion side, or increase the value of θ at the operation end, to make sure the load generated does not exceed the allowable value for the product.

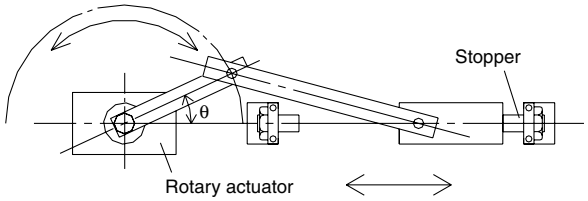

12. Do not use springs, etc., to add force in the rotational movement direction.

When rotational force from an external spring, etc., acts and generates negative pressure on the product's interior, breakage of the internal seal or acceleration of abrasion may occur.

⚠Caution

1. Observe the specified torque to secure the block of the angle adjustment unit.

If it is secured with a torque that is lower than the specified torque, the block could become loosened during use, causing the angle to exceed the set angle.

2. Do not use organic solvent to wipe the area of the name plate that shows the model.

It will erase what is indicated on the name plate.

3. Do not hit the rotating shaft by securing the body or hit the body by securing the rotating shaft.

These actions could cause the shaft to bend or damage the bearing. When a load must be coupled to the rotating shaft, secure the rotating shaft.

4. Do not place your foot directly on the shaft or on the equipment that is coupled to the shaft.

Placing one's weight directly onto the rotating shaft could cause the rotating shaft or the bearing to become damaged.

5. If a product is equipped with an angle adjustment function, use it within the specified adjustment range.

If the product is used outside the specified adjustment range, it could lead to equipment malfunction or product damage. Refer to the product specifications for details on the adjustment range of the products.

Piping

⚠Caution

1. Refer to the Fittings and Tubing Precautions (Best Pneumatics No. 6) for handling one-touch fittings.

2. Preparation before piping

Before piping is connected, it should be thoroughly blown out with air (flushing) or washed to remove chips, cutting oil and other debris from inside the pipe.

3. Wrapping of pipe tape

When screwing piping or fittings into ports, ensure that chips from the pipe threads or sealing material do not enter the piping. Also, if pipe tape is used, leave 1.5 to 2 thread ridges exposed at the end of the threads.

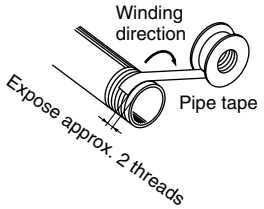

SMC

Rotary Actuators Precautions 4

Be sure to read this before handling.

Speed and Cushion Adjustment

⚠Warning

1. To make a speed adjustment, gradually adjust starting from the low speed end.

If the speed adjustment is performed from the high speed end, it could damage the product. As a result, it could pose a hazard to humans and damage the machinery and equipment.

2. The cushion needle is not adjusted at the time of shipment. Therefore, an adjustment must be made in accordance with the operating speed and the moment of inertia of the load.

The absorption of kinetic energy by the bumper is regulated by the adjustment of the needle. An improper adjustment could lead to damage of the equipment and the product. As a result, it could pose a hazard to humans and damage the machinery and equipment.

3. Do not operate with the cushion needle in a fully closed condition.

This could tear the seal, which could pose a hazard to humans and damage the machinery and equipment.

4. Do not apply an excessive force to loosen the cushion needle.

The needle itself is provided with a pull stop. However, the pullstop could be damaged if the needle is loosened through the application of excessive force. As a result, it could pose a hazard to humans and damage the machinery and equipment.

5. For products with shock absorbers, when the shock absorber stops motion before reaching the stroke end using a stopper mechanism with the objective of shortening takt time, be sure the shock absorber is stopped in a position where it has adequately absorbed the kinetic energy.

Failure to do so can result in damage to equipment.

Lubrication

⚠Warning

1. This product should be used without lubrication. Although it will operate even if it is lubricated, it could lead to sticking or slipping.

Air Supply

⚠Warning

1. Type of fluids

Please consult with SMC when using the product in applications other than compressed air.

2. When there is a large amount of drainage.

Compressed air containing a large amount of drainage can cause malfunction of pneumatic equipment. An air dryer or water separator should be installed upstream from filters.

3. Drain flushing

If condensation in the drain bowl is not emptied on a regular basis, the bowl will overflow and allow the condensation to enter the compressed air lines. It causes malfunction of pneumatic equipment.

Air Supply

⚠Warning

If the drain bowl is difficult to check and remove, installation of a drain bowl with an auto drain option is recommended.

For compressed air quality, refer to Best Pneumatics No. 5.

4. Use clean air.

Do not use compressed air that contains chemicals, synthetic oils including organic solvents, salt or corrosive gases, etc., as it can cause damage or malfunction.

⚠Caution

1. When extremely dry air is used as the fluid, degradation of the lubrication properties inside the equipment may occur, resulting in reduced reliability (or reduced service life) of the equipment. Please consult with SMC.

2. Install an air filter.

Install an air filter upstream near the valve. Select an air filter with a filtration size of 5 μm or smaller.

3. Take measures to ensure air quality, such as by installing an aftercooler, air dryer, or water separator.

Compressed air that contains a large amount of drainage can cause malfunction of pneumatic equipment such as rotary actuators. Therefore, take appropriate measures to ensure air quality, such as by providing an aftercooler, air dryer, or water separator.

4. Ensure that the fluid and ambient temperature are within the specified range.

If the fluid temperature is 5°C or less, the moisture in the circuit could freeze, causing damage to the seals and equipment malfunction. Therefore, take appropriate measures to prevent freezing.

For compressed air quality, refer to Best Pneumatics No. 5.

Operating Environment

⚠Warning

1. Do not use in an atmosphere having corrosive gases, chemicals, sea water, water, water steam, or where there is direct contact with any of these.

Refer to the construction for information on the rotary actuators material.

2. Do not expose the product to direct sunlight for an extended period of time.

3. Do not use in a place subject to heavy vibration and/or shock.

4. Do not mount the product in locations where it is exposed to radiant heat.

5. Do not use in dusty locations or where water or oil, etc., splash on the equipment.

Rotary Actuators Precautions 5

Be sure to read this before handling.

Maintenance

⚠Warning

1. Perform maintenance inspection according to the procedures indicated in the operation manual.

If handled improperly, malfunction and damage of machinery or equipment may occur.

2. Maintenance work

If handled improperly, compressed air can be dangerous. Assembly, handling, repair and element replacement of pneumatic systems should be performed by a knowledgeable and experienced person.

3. Drain flushing

Remove drainage from air filters regularly.

4. Removal of equipment, and supply/exhaust of compressed air

When components are removed, first confirm that measures are in place to prevent workpieces from dropping, run-away equipment, etc. Then, cut off the supply pressure and electric power, and exhaust all compressed air from the system using the residual pressure release function.

When machinery is restarted, proceed with caution after confirming that appropriate measures are in place to prevent cylinders from sudden movement.

⚠Caution

1. For lubrication, use the designated grease for each specific product.

The use of a non-designated lubricant could damage the seals.

Rotary Actuators Precautions 6

Be sure to read this before handling.

For Air-hydro Type

Please read this page along with the Rotary Actuators Precautions.

Design

⚠Warning

1. Do not use the product near flames, or in equipment or machinery that exceeds an ambient temperatures of 60°C.

There is a danger of causing a fire because the air-hydro type uses a flammable hydraulic fluid.
Refer to the Material Safety Data Sheet (MSDS) of the hydraulic fluid when supplying the fluid.

2. Do not use the product in a clean room.

⚠Caution

1. Do not use in an environment, equipment, or machine that is not compatible with oil mist.

The air-hydro type generates an oil mist during operation which may affect the environment.

2. Be certain to install an exhaust cleaner on the directional control valve for the air-hydro type.

A very small amount of hydraulic fluid is discharged from the exhaust port of a directional control valve, which may contaminate the surrounding area.

3. Install the air-hydro type in locations where it can be serviced easily.

Since the air-hydro type requires maintenance, such as refilling of hydraulic fluid and bleeding of air, ensure sufficient space for these activities.

Selection

⚠Caution

1. Select an air-hydro type in combination with an air-hydro unit.

Since good operation of an air-hydro type depends on its combination with an air-hydro unit, carefully select an appropriate air-hydro unit.

Piping

⚠Warning

1. For air-hydro type piping, use self-aligning fittings.

Do not use one-touch fittings in the piping for an air-hydro type, because oil leakage may occur.

2. For air-hydro type piping, use hard nylon tubing or copper piping.

As in the case of hydraulic circuits, surge pressures greater than the operating pressure may occur in an air-hydro type piping, making it necessary to use safer piping materials.

Lubrication

⚠Warning

1. Completely discharge the compressed air in the system before filling the air-hydro unit with hydraulic oil.

When supplying hydraulic fluid to the air-hydro unit, first confirm that safety measures are implemented to prevent dropping of objects and the release of clamped objects, etc. Then, shut off the air supply and the equipment's electric power and exhaust the compressed air in the system.
If the air-hydro unit's supply port is opened with compressed air still remaining in the system, there is a danger of hydraulic fluid being blown out.
Refer to the Material Safety Data Sheet (MSDS) of the hydraulic fluid when supplying the fluid.

2. Use petroleum hydraulic fluid which can be used as turbine oil.

If non-flammable hydraulic fluid is used, it may cause problems.
Suitable viscosity is in the range of approximately 40 to 100 mm^2/s in operating temperature.
The suitable operating temperature for ISO VG32 is the range of 15 to 35°C. If the operating temperature range is beyond ISO VG32, select ISO VG46 (suitable for 25 to 45°C range).

ISO VG32 Turbine Oil
(Example)

[With no additive]

Idemitsu Kosan Co., Ltd.	: Turbine Oil P-32
Nippon Oil Corporation	: Turbine Oil 32
	: Mitsubishi Turbine Oil 32
Cosmo Oil Co., Ltd.	: Cosmo Turbine 32

[With additive]

Idemitsu Kosan Co., Ltd.	: Daphne Turbine Oil 32
Nippon Oil Corporation	: FBK Turbine 32
	: Diamond Turbine Oil 32
Cosmo Oil Co., Ltd.	: Turbine Super 32

Maintenance

⚠Caution

1. Bleed air from the air-hydro type on a regular basis.

Since air may accumulate inside the air-hydro type, bleed air from it, for example before starting work. Bleed air from a bleeder valve provided on the air-hydro type or the piping.

2. Verify the oil level of the air-hydro system on a regular basis.

Since a very small amount of hydraulic fluid is discharged from the air-hydro type and the air-hydro unit circuit, the fluid will gradually decrease. Therefore, check the fluid regularly and refill as necessary.
The oil level can be checked with a level gauge in the air-hydro converter.

Auto Switches Precautions 1

Be sure to read this before handling.

Design / Selection

⚠Warning

1. Confirm the specifications.

Read the specifications carefully and use this product appropriately. The product may be damaged or malfunction if it is used outside the specification range for current load, voltage, temperature or impact.

We do not guarantee against any damage if the product is used outside of the specification range.

2. Cautions for use in an interlock circuit

When an auto switch is used for an interlock signal requiring high reliability, devise a double interlock system to avoid trouble by providing a mechanical protection function, or by also using another switch (sensor) together with the auto switch.

Also, perform periodic maintenance and confirm proper operation.

3. Do not make any modifications (including exchanging the printed circuit boards) to the product.

It may cause human injuries and accidents.

⚠Caution

1. Pay attention to the length of time that a switch is ON at an intermediate stroke position.

When an auto switch is placed at an intermediate position of the stroke and a load is driven at the time the piston passes, the auto switch will operate, but if the speed is too great the operating time will be shortened and the load may not operate properly. The maximum detectable piston speed is:

$$V\ (mm/s) = \frac{\text{Auto switch operating range (mm)}}{\text{Time load applied (ms)}} \times 1000$$

In cases of high piston speed, the use of an auto switch (D-F5NTL, F7NTL, G5NTL, M5NTL, M5PTL) with a built-in OFF delay timer (≈ 200 ms) makes it possible to extend the load operating time.

The wide-range detection type D-G5NBL (operating range 35 to 50 mm) may also be useful, depending on the application. Please consult with SMC for other models.

⚠Caution

2. Keep wiring as short as possible.

<Reed>

As the length of the wiring to a load gets longer, the rush current at switching ON becomes greater, and this may shorten the product's life. (The switch will stay ON all the time.)

1) Use a contact protection box when the wire length is 5 m or longer.
2) Even if an auto switch has a built-in contact protection circuit, when the wiring is more than 30 m long, it is not able to adequately absorb the rush current and its life may be reduced. It is again necessary to connect a contact protection box in order to extend its life. Please consult with SMC in this case.

<Solid state>

3) Although wire length should not affect switch function, use a wire 100 m or shorter.
   If the wiring is longer it will likely increase noise although the length is less than 100 m.
   When the wire length is long, we recommend the ferrite core is attached to the both ends of the cable to prevent excess noise.

A contact protection box is not necessary for solid state switches due to the nature of this product construction.

3. Do not use a load that generates surge voltage. If a surge voltage is generated, the discharge occurs at the contact, possibly resulting in the shortening of product life.

If driving a load such as a relay that generates a surge voltage,

<Reed>

Use an auto switch with built-in contact protection circuit or use a contact protection box.

<Solid state>

Use a built-in surge absorbing element type device.

4. Take precautions when multiple cylinders/actuators are used close together.

When multiple auto switch cylinders/actuators are used in close proximity, magnetic field interference may cause the auto switches to malfunction. Maintain a minimum cylinder separation of 40 mm. (When the allowable interval is specified for each cylinder series, use the indicated value.)

The auto switches may malfunction due to the interference from the magnetic fields.

Use of a magnetic screen plate (MU-S025) or commercially available magnetic screen tape can reduce the interference of magnetic force.

Auto Switches Precautions 2

Be sure to read this before handling.

Design / Selection

⚠Caution

5. Pay attention to the internal voltage drop of the auto switch.

<Reed>

1) Auto switch with an indicator light (Except D-A56, A76H, A96, A96V, C76, E76A, Z76)

- If auto switches are connected in series as shown below, take note that there will be a large voltage drop because of internal resistance in the light emitting diodes. (Refer to the internal voltage drop in the auto switch specifications.) [The voltage drop will be "n" times larger when "n" auto switches are connected.]
  Even though an auto switch operates normally, the load may not operate.

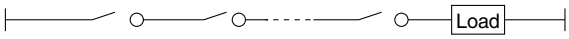

- In the same way, when operating under a specified voltage, although an auto switch may operate normally, the load may not operate. Therefore, the formula below should be satisfied after confirming the minimum operating voltage of the load.

$$\text{Supply voltage} - \text{Internal voltage drop of auto switch} > \text{Minimum operating voltage of load}$$

2) If the internal resistance of a light emitting diode causes a problem, select an auto switch without an indicator light (D-A6□, A80, A80H, A90, A90V, C80, R80, 90, E80A, Z80).

<Solid state/2-wire type>

3) Generally, the internal voltage drop will be greater with a 2-wire solid state auto switch than with a reed auto switch. Take the same precautions as in 1).
Also, take note that a 12 VDC relay is not applicable.

6. Pay attention to leakage current.

<Solid state/2-wire type>

Current (leakage current) flows to the load to operate the internal circuit even when in the OFF state.

Operating current of load (OFF condition) > Leakage current

If the criteria given in the above formula are not met, it will not reset correctly (stays ON). Use a 3-wire switch if this specification will not be satisfied.
Moreover, leakage current flow to the load will be "n" times larger when "n" auto switches are connected in parallel.

7. Ensure sufficient clearance for maintenance activities.

When designing an application, be certain to allow sufficient clearance for maintenance.

8. When multiple auto switches are required.

"n" indicates the number of auto switches which can be physically mounted on the cylinders/actuators. Detection intervals depends on the auto switch mounting structure and set position, therefore some required interval and set positions may not be available.

9. Limitations of detectable positioning

When using certain mounting brackets, the surface and position where an auto switch can be mounted maybe restricted due to physical interference. For example, when using some bracket types the auto switch cannot be surface mounted at the bottom side of foot bracket, etc.
Select the set position of the auto switch so that it does not interfere with the mounting bracket of the cylinders/actuators (such as trunnion or reinforcement ring).

10. Use the cylinder and auto switch in proper combination.

The auto switch is pre-adjusted to activate properly for an auto-switch-capable SMC cylinder/actuator.
If the auto switch is mounted improperly, used for another brand of cylinders/actuators or used after the alternation of the machine installation, the auto switch may not activate properly.

Mounting / Adjustment

⚠Caution

1. Do not drop or bump.

Do not drop, bump or apply excessive impacts (300 m/s^2 or more for reed auto switches and 1000 m/s^2 or more for solid state auto switches) while handling. Although the body of the auto switch may not be damaged, the inside of the auto switch could be damaged and cause malfunction.

2. Observe the proper tightening torque for mounting an auto switch.

When an auto switch is tightened beyond the range of tightening torque, auto switch mounting screws, auto switch mounting brackets or auto switch may be damaged.
On the other hand, tightening below the range of tightening torque may allow the auto switch to slip out of position.

3. Do not carry a cylinder by the auto switch lead wires.

Never carry a cylinder by its lead wires. This may not only cause broken lead wires, but it may cause internal elements of the auto switch to be damaged by the stress.

4. Fix the auto switch with appropriate screw installed on the switch body. If using other screws, auto switch may be damaged.

Auto Switches Precautions 3

Be sure to read this before handling.

Wiring

⚠Caution

1. Confirm proper insulation of wiring.

Be certain that there is no faulty wiring insulation (contact with other circuits, ground fault, improper insulation between terminals, etc.). Damage may occur due to excess current flow into a switch.

2. Do not wire with power lines or high voltage lines.

Wire separately from power lines or high voltage lines, avoiding parallel wiring or wiring in the same conduit with these lines. Control circuits containing auto switches may malfunction due to noise from these other lines.

3. Avoid repeatedly bending or stretching lead wires.

Broken lead wires will result from repeatedly applying bending stress or stretching force to the lead wires.
Stress and tensile force applied to the connection between the cable and auto switch increases the possibility of disconnection.
Fix the cable in the middle so that it is not movable in the area where it connects with the auto switch.

4. Be certain to connect the load before power is applied.

<2-wire type>

If the power is turned ON when an auto switch is not connected to a load, the auto switch will be instantly damaged because of excess current (short circuit).
It is the same as when the 2-wire brown lead wire (+, output) is directly connected to the (+) power supply terminal.

5. Do not allow short-circuit of loads.

<Reed>

If the power is turned ON with a load in a short circuited condition, the auto switch will be instantly damaged because of excess current flow into the switch.

<Solid state>

All models of D-J51, G5NB and PNP output type auto switches do not have built-in short circuit protection circuits.
If a load is short circuited, the auto switch will be instantly damaged as in the case of reed auto switches.
Take special care to avoid reverse wiring with the brown power supply line and the black output line on 3-wire type auto switches.

6. Avoid incorrect wiring.

<Reed>

A 24 VDC auto switch with indicator light has polarity. The brown lead wire or terminal No. 1 is (+), and the blue lead wire or terminal No. 2 is (–).

[For D-97, (+) is on the no-displayed side, (–) is on the black line side.]

1) If connections are reversed, an auto switch will operate, however, the light emitting diode will not light up.
Also, take note that a current greater than that specified will damage a light emitting diode and it will no longer operate.
Applicable model:
D-A73, A73H, A73C, C73, C73C, E73A, Z73
D-R73, R73C, 97, 93A, A93, A93V
D-A33, A34, A33A, A34A, A44, A44A
D-A53, A54, B53, B54

2) When using a 2-color indicator type auto switch (D-A79W, A59W and B59W), the auto switch will constantly remain ON if the connections are reversed.

<Solid state>

1) If connections are reversed on a 2-wire type auto switch, the auto switch will not be damaged if protected by a protection circuit, but the auto switch will always stay in an ON state. However, it is still necessary to avoid reversed connections, since the auto switch could be damaged by a load short circuit in this condition.

2) If connections are reversed (power supply line + and power supply line –) on a 3-wire type auto switch, the auto switch will be protected by a protection circuit. However, if the power supply line (+) is connected to the blue wire and the power supply line (–) is connected to the black wire, the auto switch will be damaged.

7. When the cable sheath is stripped, confirm the stripping direction. The insulator may be split or damaged depending on the direction. (D-M9□ only)

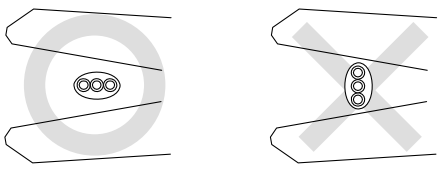

Recommended Tool

Description	Model
Wire stripper	D-M9N-SWY

∗ Stripper for a round cable (ø2.0) can be used for a 2-wire type cable.

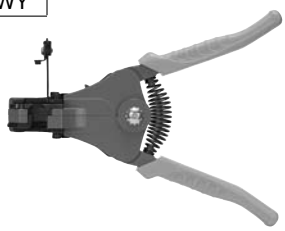

Auto Switches Precautions 4

Be sure to read this before handling.

Operating Environment

⚠Warning

1. Never use in an atmosphere of explosive gases.

The structure of auto switches is not intended to prevent explosion. Never use in an atmosphere with an explosive gas since this may cause a serious explosion.
Please contact SMC concerning ATEX compliant products.

⚠Caution

1. Do not use in an area where a magnetic field is generated.

Auto switches will malfunction or magnets inside cylinders/actuators will become demagnetized. (Please consult with SMC if a magnetic field resistant auto switch can be used.)

2. Do not use in an environment where the auto switch will be continually exposed to water.

Although auto switches satisfy IEC standard IP67 construction (JIS C 0920: waterproof construction) except some models (D-A3□, A44□, G39□, K39□, RNK, RPK) do not use auto switches in applications where continually exposed to water splash or spray. Poor insulation or swelling of the potting resin inside auto switches may cause malfunction.

3. Do not use in an environment with oil or chemicals.

Please consult with SMC if auto switches will be used in an environment with coolant, cleaning solvent, various oils or chemicals. If auto switches are used under these conditions for even a short time, they may be adversely affected by improper insulation, malfunction due to swelling of the potting resin, or hardening of the lead wires.

4. Do not use in an environment with temperature cycles.

Please consult with SMC if auto switches are used where there are temperature cycles other than normal temperature changes, as there may be adverse effects inside the auto switches.

5. Do not use in an environment where there is excessive impact shock.

<Reed>

When excessive impact (300 m/s^2 or more) is applied to a reed auto switch during operation, the contact point will malfunction and generate or cut off a signal momentarily (1 ms or less). Please consult with SMC if a solid state auto switch can be used according to the environment.

6. Do not use in an area where surges are generated.

<Solid state>

When there are units (solenoid type lifter, high frequency induction furnace, motor, radio equipment etc.) which generate a large amount of surge in the area around cylinders/actuators with solid state auto switches, this may cause deterioration or damage to the auto switch's internal circuit elements. Avoid sources of surge generation and disorganized lines.

⚠Caution

7. Avoid accumulation of iron waste or close contact with magnetic substances.

When a large amount of iron waste such as machining chips or spatter is accumulated, or a magnetic substance (something attracted by a magnet) is brought into close proximity with a cylinder with auto switches, or an actuator, it may cause the auto switch to malfunction due to a loss of the magnetic force inside the cylinder/actuator.

8. Please contact SMC concerning water resistance, elasticity of lead wires, usage at welding sites, etc.

9. Do not use in direct sunlight.

10. Do not mount the product in locations where it is exposed to radiant heat.

Maintenance

⚠Warning

1. Removal of equipment, and supply/exhaust of compressed air

Before any machinery or equipment is removed, first ensure that the appropriate measures are in place to prevent the fall or erratic movement of driven objects and equipment, then cut off the electric power and reduce the pressure in the system to zero. Only then should you proceed with the removal of any machinery and equipment.
When machinery is restarted, proceed with caution after confirming that appropriate measures are in place to prevent actuators from moving suddenly.

⚠Caution

1. Perform the following maintenance periodically in order to prevent possible danger due to unexpected auto switch malfunction.

1) Secure and tighten auto switch mounting screws.
If screws become loose or the mounting position is dislocated, retighten them after readjusting the mounting position.

2) Confirm that there is no damage to lead wires.
To prevent faulty insulation, replace auto switches or repair lead wires, etc., if damage is discovered.

3) Confirm the lighting of the green light on the 2-color indicator type auto switch.
Confirm that the green LED is on when stopped at the established position. If the red LED is on, the mounting position is not appropriate. Readjust the mounting position until the green LED lights up.

How to Order

Size: 1, 2, 3, 7



Clean series

11	Vacuum suction type

A	High precision style
B	Basic style

Size

1
2
3
7

Nil	Side ported
E	Front ported

11 - MSQ B 1 A □ - M9B □

A	With adjustment bolt

Auto switch

Reed switch	A90
Solid state switch	M9B, M9N, F8B, F8N

Number of auto switches

Nil	2 pcs.
S	1 pc.
n	n pcs.

Size: 10, 20, 30, 50



Clean series

11	Vacuum suction type

Size

10
20
30
50

11 - MSQ B 10 A - M9B □

22 - MSQ B 10 A - M9B □

Copper, fluorine and silicon-free + Low particle generation

22	Vacuum suction type

A	High precision style
B	Basic style

A	With adjustment bolt
R	With internal shock absorber

Auto switch

Reed switch	A90
Solid state switch	M9B, M9N

Number of auto switches

Nil	2 pcs.
S	1 pc.
n	n pcs.

Auto switch specifications

Type		Auto switch model	Load voltage	Load current range	Indicator light	Applicable load
Reed switch		**D-A90**	24 VAC or less, 48 VAC or less, 100 VAC or less 24 VDC or less, 48 VDC or less, 100 VDC or less	50mA, 40mA, 20mA	No	IC circuit, Relay, PLC
Solid state switch	2-wire	**D-M9B, D-F8B**	24 VDC (10 to 28 VDC)	2.5 to 40 mA	Yes	24 VDC relay, PLC
	3-wire	**D-M9N, D-F8N**	24 VDC (4.5 to 28 VDC)	40 mA or less	Yes	24 VDC relay, PLC

Refer to page 212 for a list of applicable auto switches.

Specifications

Size		1	2	3	7	10	20	30	50
Fluid		Air (Non-lube)							
Maximum operating pressure	**With adjustment bolt**	0.7MPa				1MPa			
	With internal shock absorber	Not available				0.6MPa			
Minimum operating pressure	**Basic style**	0.1MPa							
	High precision style	0.1MPa				0.2MPa	0.1MPa		
Ambient and fluid temperature		0 to 60°C (No freezing)							
Cushion	**With adjustment bolt**	Not available	Rubber bumper						
	With internal shock absorber	Not available				Shock absorber			
Allowable kinetic energy (mJ)	**With adjustment bolt**	1	1.5	2	6	7	25	48	81
	With internal shock absorber	Not available				39	116	116	294
Angle adjustment range		0 to 190°C							
Maximum rotation		190°C							
Rotation time adjustment range	**With adjustment bolt**	0.2 to 0.7 s/90°			0.2 to 1.0 s/90°				
	With internal shock absorber	Not available			0.2 to 0.7 s/90°				
Port size		M3 x 0.5			M5 x 0.8			Rc 1/8, M5 x 0.8	
Grease		11-: Fluorine grease 22-: Lithium soap based grease							
Particle generation grade **(Refer to front matter pages 13 to 22 for details.)**		11-: Grade 1 22-: Grade 1							

Suction flow rate of vacuum suction type (Reference values)

Size	Suction flow rate ℓ/min (ANR)
1/2/3/7 10/20/30/50	1

Rotation range example

· The rotary table turns in the clockwise direction when the A port is pressurized, and in the counterclockwise direction when the B port is pressurized.
· By adjusting the adjustment bolt, the rotation end can be set within the ranges shown in the drawing for the desired rotation angle.
· The rotation angle can also be set on a type with internal absorber.

Size: 1 to 7

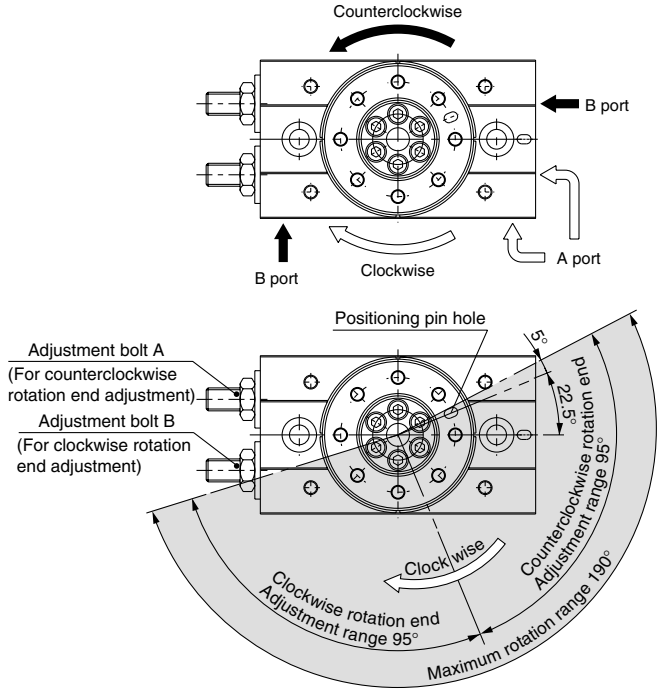

Note) · The drawing shows the rotation range of the positioning pin hole.
· The pin hole position in the drawing shows the counterclockwise rotation end when the adjustment bolts A and B are tightened equally and the rotation is adjusted 180°.

With adjustment bolt, internal shock absorber

Size	Adjustment angle per rotation of angle adjustment bolt
1	8.2°
2	10.0°
3	10.9°
7	10.2°

Size: 10 to 50

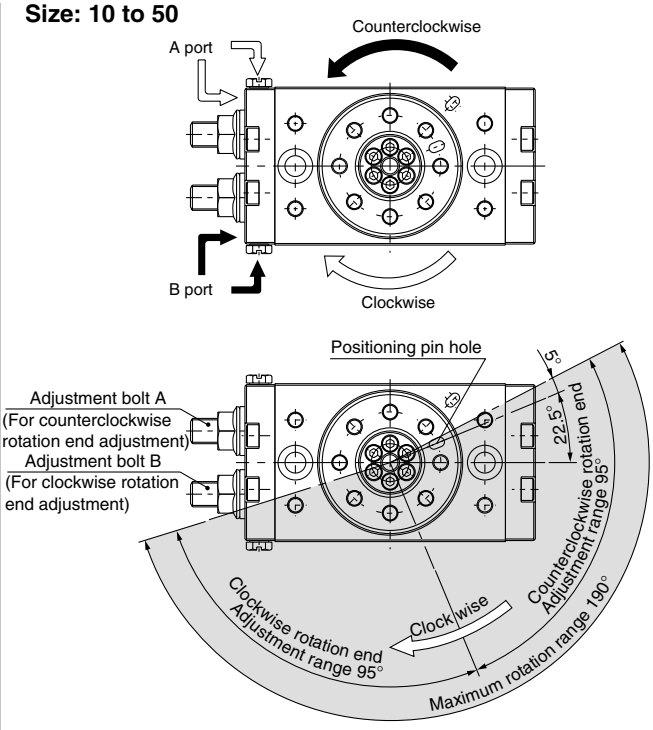

Note) · The drawing shows the rotation range of the positioning pin hole.
· The pin hole position in the drawing shows the counterclockwise rotation end when the adjustment bolts A and B are tightened equally and the rotation is adjusted 180°.

With adjustment bolt, internal shock absorber

Size	Adjustment angle per rotation of angle adjustment bolt
10	10.2°
20	7.2°
30	6.5°
50	8.2°
70	7.0°
100	6.1°
200	4.9°

Proper auto switch mounting position at rotation end

Size: 1 to 7

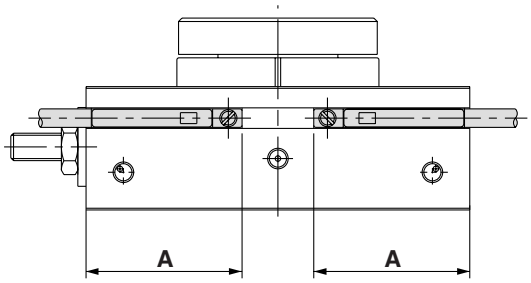

D-F9, M9

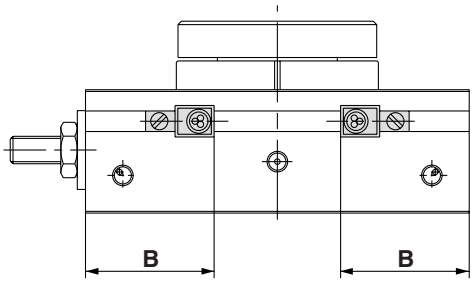

D-F8

Size	Rotating angle	Solid state switch					
		D–M9□			D–F8□		
		A	Operating angle θ m	Hysteresis angle	B	Operating angle θ m	Hysteresis angle
1	190°	20.9	55°	10°	16.9	20°	10°
2	190°	22.8	45°	10°	18.8	20°	10°
3	190°	24.4	40°	10°	20.4	15°	10°
7	190°	28.7	40°	10°	24.7	15°	10°

Operating angle θ m: Converts the operating range (Lm) of the auto switch into the rotation angle
Angle of hysteresis: The hysteresis of the auto switch is converted to degrees.

Size: 10 to 50

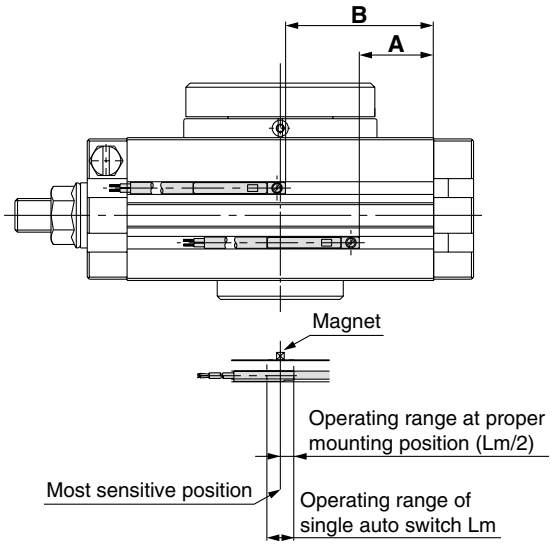

Size	Rotating angle	Reed switch				Solid state switch			
		D–A9□, D–A9□V				D–M9□			
		A	B	Operating angle θ m	Hysteresis angle	A	B	Operating angle θ m	Hysteresis angle
10	190°	17	36	90°	10°	21	40	60°	10°
20	190°	23	50	80°	10°	27	54	50°	10°
30	190°	27	66	65°	10°	31	60	50°	10°
50	190°	33	68	50°	10°	37	72	40°	10°

Operating angle θ m: Converts the operating range (Lm) of the auto switch into the rotation angle
Angle of hysteresis: The hysteresis of the auto switch is converted to degrees.

Dimensions: Size 1, 2, 3, 7

Basic style: MSQB□A

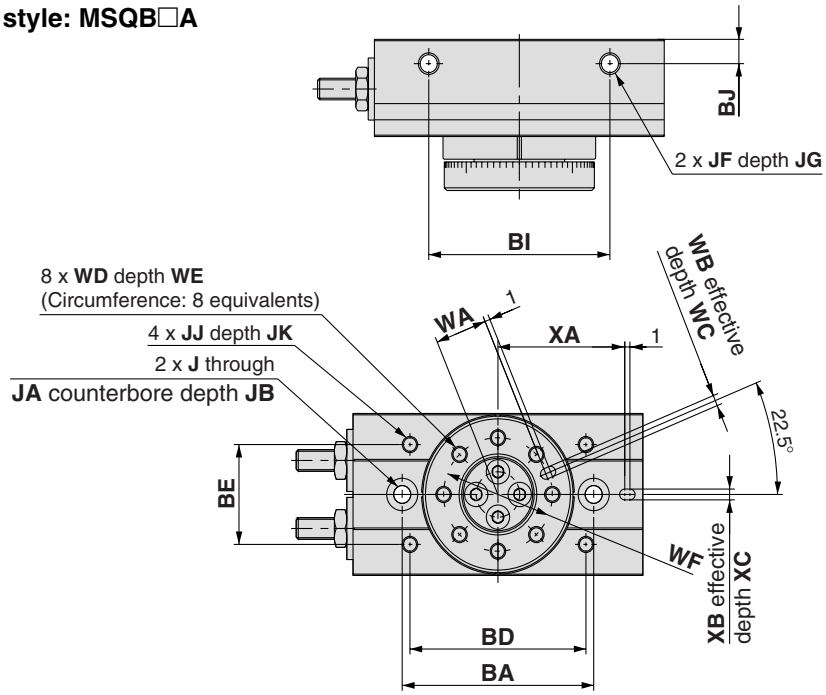

High precision style: MSQA□A

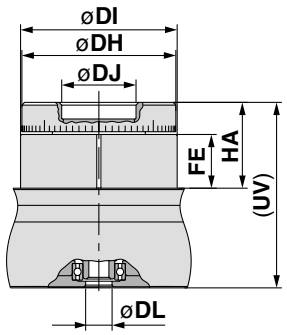

(mm)

Size	DH	DI	DJ	DL	FE	HA	UV
1	27h8	27.5h8	14H8	4.5H8	8.2	13.5	29.5
2	29h8	29.5h8	14H8	5 H8	9.7	15.5	33.5
3	33h8	34h8	17H8	6 H8	9.7	15.5	36
7	39h8	40h8	20H8	7 H8	9.5	16.5	39.5

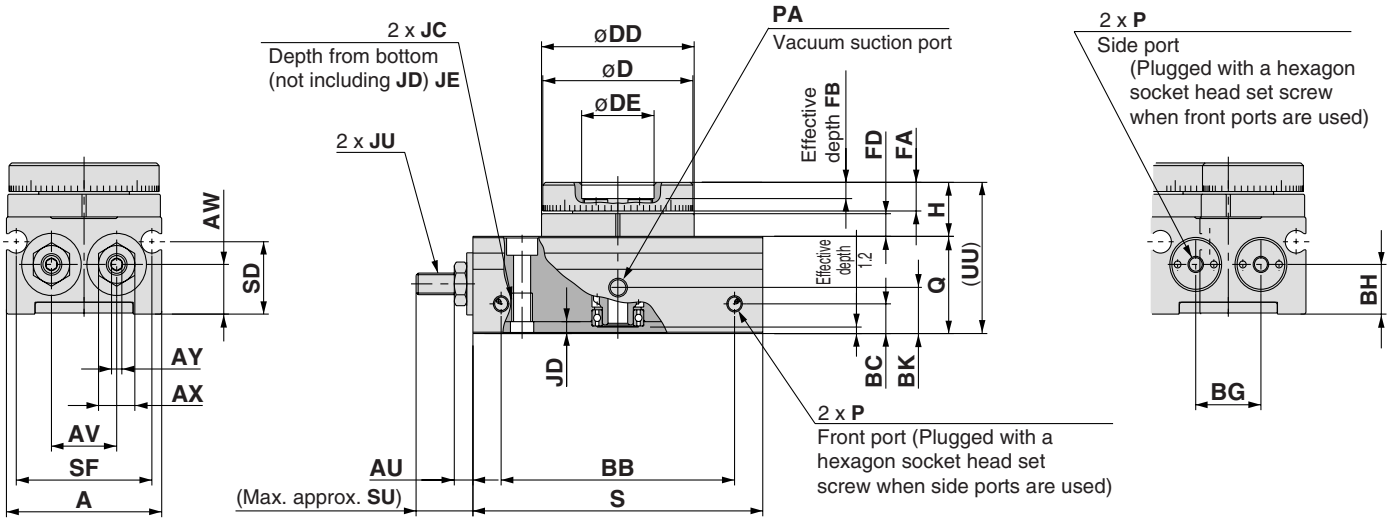

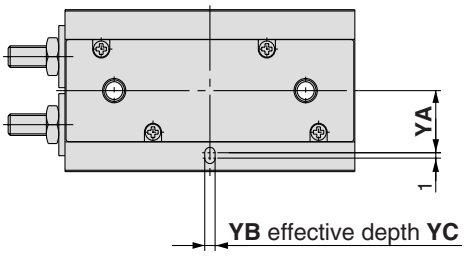

(mm)

Size	A	AU	AV	AW	AX	AY	BA	BB
1	28	2.8	11	8.2	5.5	1.5	35	39.6
2	30	3.6	12.6	9.2	7	2	37	45.1
3	34.5	4.4	15.5	10.5	8	2.5	43	46.7
7	41	4.8	18.4	12.2	10	3	50	59.2

(mm)

Size	BC	BD	BE	BG	BH	BI	BJ	BK	D	DD	DE	FA	FB	FD	H	J	JA	JB	JC	JD	JE	JF	JG
1	4.5	32	17	11	8.2	30	4.5	5.3	27h9	27.5h9	14H9	4.8	2	3.7	9	3.3	6	3.5	M4 x 0.7	2.2	5.3	M4 x 0.7	4
2	5.5	34	18.5	12.6	9.2	35	4.5	7.5	29h9	29.5h9	14H9	5.3	2.5	4.2	10	3.3	6	3.5	M4 x 0.7	2.2	5.3	M4 x 0.7	4
3	5.5	38	23	15.5	10.5	40	4.5	9.5	33h9	34 h9	17H9	5.3	2.5	4.2	10	4.2	7.5	4.5	M5 x 0.8	2.5	6	M4 x 0.7	4
7	5.5	45	30	18.4	12.2	50	5	7	39h9	40 h9	20H9	6.5	2.5	4.5	11.5	4.2	7.5	4.5	M5 x 0.8	2.5	6	M5 x 0.8	5

(mm)

Size	JJ	JK	JU	P	PA	Q	S	SD	SF	SU	UU	WA	WB	WC	WD	WE	WF	XA	XB	XC	YA	YB	YC
1	M3 x 0.5	3.5	M3 x 0.5	M3 x 0.5	M3 x 0.5	16	50.5	10.8	24.4	9.4	25	9.5	2H9	2	M3 x 0.5	4.8	20	22.5	2H9	2	11	2H9	2
2	M3 x 0.5	3.5	M4 x 0.7	M3 x 0.5	M3 x 0.5	18	56	13.4	26.2	11.3	28	10	2H9	2	M3 x 0.5	5.3	21	24.5	2H9	2	11.5	2H9	2
3	M3 x 0.5	3.5	M5 x 0.8	M3 x 0.5	M3 x 0.5	20.5	60	15.2	31	11.8	30.5	12	2H9	2	M3 x 0.5	5.3	25	27	2H9	2	13.5	2H9	2
7	M4 x 0.7	4.5	M6 x 1	M5 x 0.8	M5 x 0.8	23	73.5	15.4	37.4	14.9	34.5	14	3H9	3	M4 x 0.7	6.5	29	32.5	3H9	3	15.5	3H9	3

Dimensions: Size 10, 20, 30, 50

Basic style: 11-22-MSQB□A

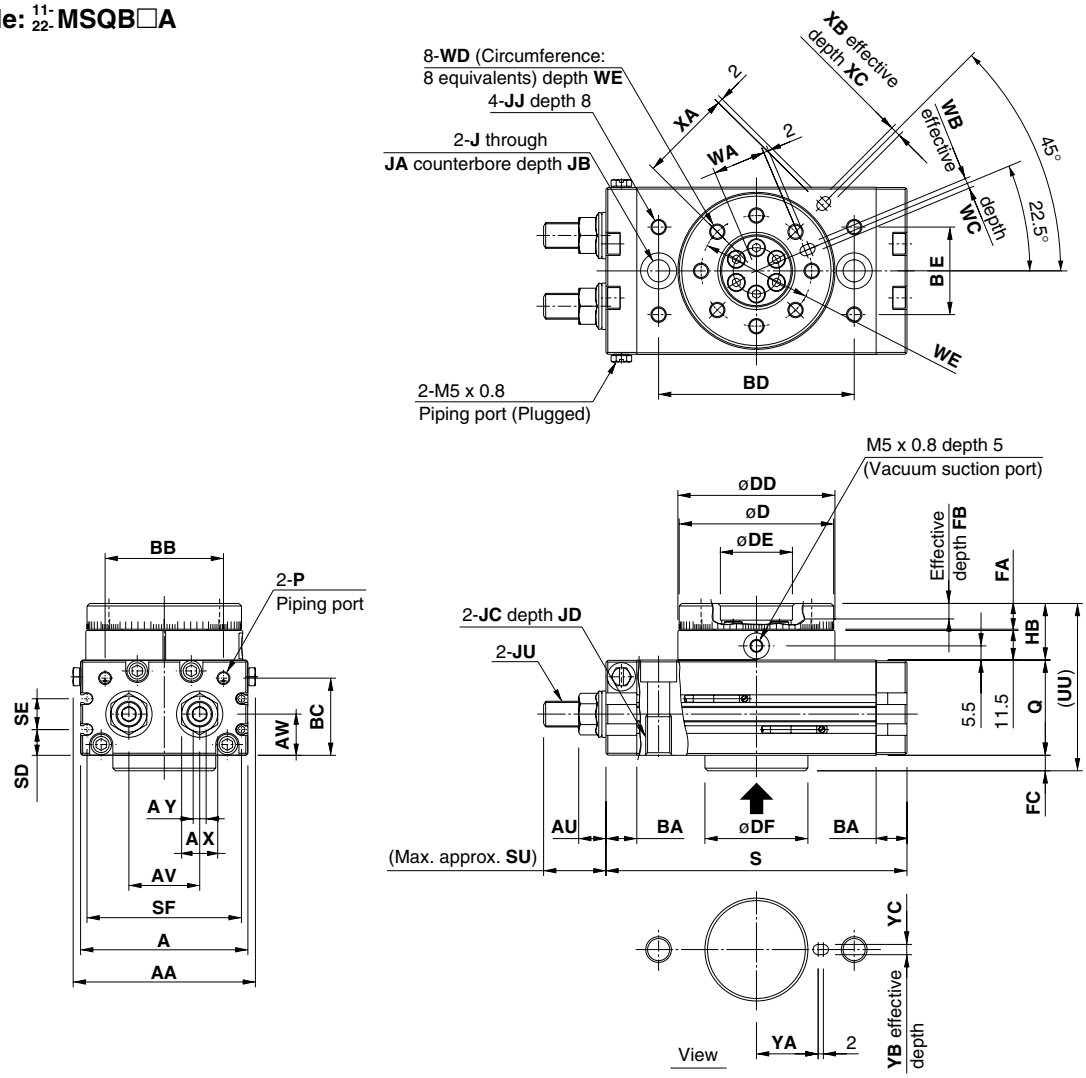

With internal shock absorber
11-22- **MSQA□□R**
11-22- **MSQB□□R**

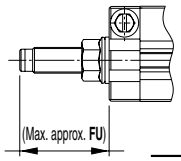

(mm)

Size	FU
10	31.5
20	34.7
30	34.7
50	51.7

High precision style
11-22- **MSQA□□A**
11-22- **MSQA□□R**

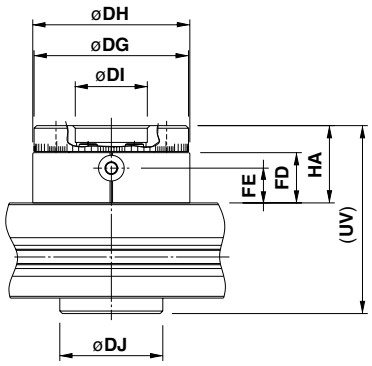

(mm)

Size	DG	DH	DI	DJ	FD	FE	HA	UV
10	45h8	46h8	20H8	35h8	15.5	9.5	24	63
20	60h8	61h8	28H8	40h8	19.5	13.5	30	73
30	65h8	67h8	32H8	48h8	19.5	13.5	30	76
50	75h8	77h8	35H8	54h8	21.5	15.5	34	87

(mm)

Size	AA	A	AU	AV	AW	AX	AY	BA	BB	BC	BD	BE	D	DD	DE	DF	FA	FB	FC	HB	J	JA	JB	JC	JD
10	55.4	50	8.6	20	15.5	12	4	9.5	34.5	27.8	60	27	45h9	46h9	20H9	35h9	8	4	5	20	6.8	11	6.5	M8 x 1.25	12
20	70.8	65	10.6	27.5	16	14	5	12	46	30	76	34	60h9	61h9	28H9	40h9	10	6	6	22	8.6	14	8.5	M10 x 1.5	15
30	75.4	70	10.6	29	18.5	14	5	12	50	32	84	37	65h9	67h9	32H9	48h9	10	4.5	6	22	8.6	14	8.5	M10 x 1.5	15
50	85.4	80	14	38	22	19	6	15.5	63	37.5	100	50	75h9	77h9	35H9	54h9	12	5	7	24	10.5	18	10.5	M12 x 1.75	18

Size	JJ	JU	P	Q	S	SD	SE	SF	SU	UU	WA	WB	WC	WD	WE	WF	XA	XB	XC	YA	YB	YC
10	M5 x 0.8	M8 x 1	M5 x 0.8	34	92	9	13	45	17.7	59	15	3H9	3.5	M5 x 0.8	8	32	27	3H9	3.5	19	3H9	3.5
20	M6 x 1	M10 x 1	M5 x 0.8	37	117	10	12	60	25	65	20.5	4H9	4.5	M6 x 1	10	43	36	4H9	4.5	24	4H9	4.5
30	M6 x 1	M10 x 1	Rc 1/8	40	127	11.5	14	65	25	68	23	4H9	4.5	M6 x 1	10	48	39	4H9	4.5	28	4H9	4.5
50	M8 x 1.25	M14 x 1.5	Rc 1/8	46	152	14.5	15	75	31.4	77	26.5	5H9	5.5	M8 x 1.25	12	55	45	5H9	5.5	33	5H9	5.5

Rotary actuators: Precautions 1

Be sure to read before handling. Refer to main text for more detailed precautions on every series.

Caution on design

⚠Warning

1. If the operation involves load fluctuations, ascending / descending movements, or changes in frictional resistance, make sure to provide safety measures.
Operating speed will increase, and bodily injury may occur, or damage to the machinery itself may occur.

2. If there is a chance that it will pose a hazard to humans, install a protective cover.
If the moving portion of the product will pose a hazard to humans or will damage machinery or equipment, provide a construction that prevents direct contact with those areas.

3. Make sure that the secured portions will not loosen.
Be sure to adopt a reliable connecting method if the rotary actuator is used very frequently or if it is used in a location that is exposed to a large amount of vibrations.

4. There may be cases in which a speed reduction circuit or a shock absorber is required.
If the driven object moves at high speeds or has a large weight, it will be unfeasible for the rotary actuator's cushions alone to absorb shocks. Therefore, provide a speed-reduction circuit to reduce the rotary actuator's speed before the thrust is applied to the cushions, or an external shock absorber to dampen the shocks. If these countermeasures are taken, make sure to take the rigidity of the mechanical equipment into consideration.

5. Consider the possibility of a reduction in the circuit air pressure that could be caused by power outages.
When actuator is used as clamping mechanism, there is a danger of workpiece dropping if there is a decrease in clamping force due to a drop in circuit pressure caused by a power outage. Therefore, safety equipment should be installed to prevent damage to machinery and bodily injury.

6. Consider the possibility of power source related malfunctions that could occur.
On the pieces of equipment that rely on power sources such as compressed air, electricity, or hydraulic pressure, adopt a countermeasure that will prevent these pieces of equipment from causing hazards to humans or damage to equipment in the event of a malfunction in these power sources.

7. If a speed controller is provided in the exhaust restrictor, implement a safety design taking the residual pressure into consideration.
If air pressure is applied to the air supply side without residual pressure in the exhaust side, the rotary actuator will operate at abnormally high speeds, which could pose a hazard to humans and damage the machinery and equipment.

8. Consider the behavior of the rotary actuator in the event of an emergency stop.
Devise a system that ensures safety so that if a person engages the emergency stop, or if a safety device is tripped during a system malfunction such as a power outage, the halting of the machine will not cause the movement of the rotary actuator to pose a hazard to humans or damage the equipment.

9. Consider the behavior of the rotary actuator when restarting after an emergency stop.
Devise a design that ensures safety so that the restarting of the rotary actuator will not pose a hazard to humans or damage the equipment.
When the actuator has to be reset at the starting position, install safe manual control equipment.

Caution on design

⚠Warning

10. Do not use the product as a shock absorber.
If an abnormal pressure or air leakage occurs, the rotary actuator's speed reduction capability could become severely effected, which could pose a hazard to humans and damage the machinery and equipment.

Selection

⚠Warning

1. Select a speed within the product's allowable energy value.
If the product is used in a state in which the kinetic energy of the load exceeds the allowable value, it could damage the product, which could pose a hazard to humans and damage the machinery and equipment.

2. Provide a shock absorber if the kinetic energy that is applied to the product exceeds the allowable value.
If the product is used in a state in which the kinetic energy exceeds the allowable value, it could damage the product, which could pose a hazard to humans and damage the machinery and equipment.

3. Do not stop or hold the product at midpoint by keeping air pressure in the product.
With the product lacking an external stopping mechanism, if the directional control valve is closed to keep the air pressure in the product in an attempt to stop the product at midpoint, it might not be possible to maintain that stopped position due to an air leakage. As a result, it could pose a hazard to humans and damage machinery and equipment.

⚠Caution

1. Do not operate the product in a low speed range below the speed adjustment range specified for the product.
If the product is used in the low speed range below the specified speed adjustment range, it could cause the product to stick, slip, or to stop its movement.

2. Do not apply an external torque to the product that exceeds the rated output.
If an external force that exceeds the product's rated output is applied to the product, it could damage the product.

3. The holding torque of the rotating end of the double piston style
With a double piston product, if the internal piston is stopped by coming into contact with the angle adjustment screw or the cover, the holding torque at the rotating end is one-half that of the actual output.

4. If it is necessary to provide repeatability of the rotation angle, directly stop the load externally.
Even with a product that is equipped with an angle adjuster, there are times in which the initial rotation angle could change.

5. Do not use the product under hydraulic pressure.
The product will be damaged if it is used by applying hydraulic pressure.

6. With the vane style product, if it is necessary to ensure a rotation angle, make sure to use a minimum pressure of 0.3 MPa.

Rotary actuators: Precautions 2

Be sure to read before handling. Refer to main text for more detailed precautions on every series.

Mounting

⚠Warning

1. Before adjusting the angle by supplying air pressure, take appropriate measures to prevent the equipment from rotating unnecessary.
When an adjustment is performed under air pressure, the equipment could rotate and fall during the adjustment, depending on the mounted posture of the equipment. As a result, it could pose a hazard to humans and damage the machinery and equipment.

2. Do not loosen the angle adjustment screw beyond the allowable adjustment range.
The angle adjustment screw could pull out if it is loosened beyond its allowable adjustment range, which could pose a hazard to humans and damage the machinery and equipment.

3. Do not place a magnetic object near the product.
The auto switch is a magnetic sensing type. If a magnetic object is placed close to it, the rotary actuator could operate suddenly, which could pose a hazard to humans and damage the machinery and equipment.

4. Do not modify the product.
By modifying the product, its strength could be affected, which could lead the product to break. As a result, it could pose a hazard to humans and damage the machinery and equipment.

5. Do not enlarge the fixed throttle by modifying the pipe connectors.
If the hole diameter is enlarged, the product's rotation speed increases, causing the shock force to increase and damage the product. As a result, it could pose a hazard to humans and damage the machinery and equipment.

6. If shaft couplings are to be used, use those with angular freedom.
If shaft couplings that lack angular freedom are used, they could scrape due to eccentricity, leading to equipment malfunction and product damage. As a result, it could pose a hazard to humans and damage the machinery and equipment.

7. Do not apply to the shaft a load that exceeds the values given.
If a load that exceeds the allowable value is applied to the product, it could lead to equipment malfunction, which could pose a hazard to humans and damage the machinery and equipment.
Provided that a dynamic load is not generated, a load that is within the allowable radial/thrust load can be applied. However, applications in which the load is applied directly to the shaft should be avoided wherever possible. The methods such as those described below are recommended to prevent the load from being applied directly to the shaft in order to ensure a proper operating condition.

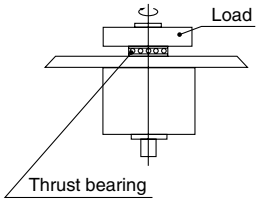

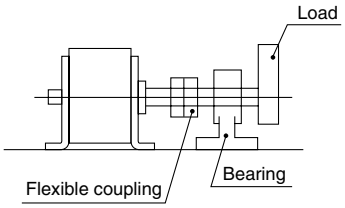

8. Place an external stopper in a position that is away from the rotating shaft.
If the stopper is placed near the rotating shaft, the torque that is generated by the product itself causes a reaction force that is directed to the stopper to be applied to the rotating shaft, thus leading the rotating shaft and the bearing to break. As a result, it could pose a hazard to humans and damage the machinery and equipment.

Precautions when using external stoppers

If the kinetic energy that is generated by the load exceeds the actuator's threshold value, an external dampening function must be provided to absorb the energy.
Furthermore, with the CRA1 series, which is a single rack pinion type, there is a backlash (within 1° at the rotation end) of the rack pinion mechanism. Thus, an external stopper is required in order to determine the correct angle.

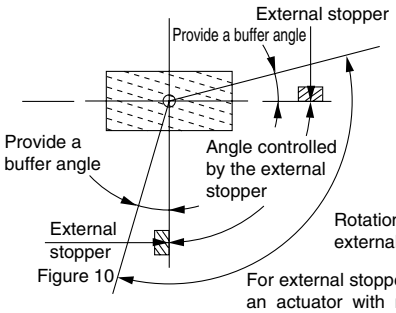

For external stopper use, some are provided with an actuator with rotation angles of 100°, 190° and 280°, depending on the model.

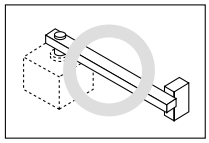

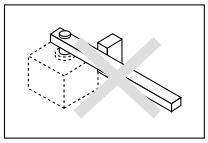

External stopper becomes a fulcrum, and the load's inertial force is applied to the shaft as a bending moment.

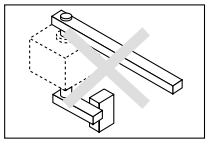

If an external stopper is installed on the shaft side opposite the load, the inertial force generated by the load is applied directly to the shaft.

⚠Caution

1. Do not use organic solvent to wipe the area of the nameplate that shows the model.
It will erase what is indicated on the nameplate.

2. Do not hit the rotating shaft by securing the body or hit the body by securing the rotating shaft.
These actions could cause the shaft to bend or damage the bearing. When a load must be coupled to the rotating shaft, secure the rotating shaft.

3. Do not place your foot directly on the shaft or on the equipment that is coupled to the shaft.
Placing one's weight directly onto the rotating shaft could cause the rotating shaft or the bearing to become damaged.

4. If a product is equipped with an angle adjustment function, use it within the specified adjustment range.
If the product is used outside the specified adjustment range, it could lead to equipment malfunction or product damage. Refer to the product specifications for details on the adjustment range of the products.

Rotary actuators: Precautions 3

Be sure to read before handling. Refer to main text for more detailed precautions on every series.

Air supply

⚠Warning

1. Use clean air.

Do not use compressed air that contains synthetic oil, salt, and corrosive gases in which chemicals and organic solvents are present, because it could cause equipment damage or malfunction.

⚠Caution

1. Install an air filter.

Install an air filter upstream, near the valve. Select an air filter with a filtration degree of 5 μm or finer.

2. Take countermeasures to ensure air quality, such as by installing an aftercooler, air dryer, or drain catch.

Compressed air that contains a large amount of drainage could cause the rotary actuator or other types of pneumatic equipment to malfunction. Therefore, take appropriate measures to ensure air quality, such as by proving an aftercooler, air dryer, or drain catch.

3. Ensure that the fluid and ambient temperature are within the specified range.

If the fluid temperature is less than 5°C, the moisture in the circuit could freeze, causing damage to the seals and leading to equipment malfunction. Therefore, take appropriate measures to prevent freezing.

Operating environment

⚠Warning

1. Do not use the rotary actuator in an environment or location that poses the risk of corrosion.

Refer to the respective construction diagram for details on the materials used in the rotary actuator.

Speed and bumper adjustment

⚠Warning

1. To make a speed adjustment, gradually adjust starting from the low speed end.

If the speed adjustment is performed from the high speed end, it could damage the product. As a result, it could pose a hazard to humans and damage the machinery and equipment.

2. The cushion needle is not adjusted at the time of shipment. Therefore, an adjustment must be made in accordance with the operating speed and the moment of inertia of the load.

The absorption of kinetic energy by the bumper is regulated by the adjustment of the needle. An improper adjustment could lead to damage of the equipment and the product. As a result, it could pose a hazard to humans and damage the machinery and equipment.

3. Do not use the rotary actuator with its cushion needle in the fully closed state.

This could tear the seal, which could pose a hazard to humans and damage the machinery and equipment.

4. Do not apply an excessive force to loosen the cushion needle.

The needle itself is provided with a pull stop; however the pull stop could be damaged if the needle is loosened through the application of excessive force. As a result, it could pose a hazard to humans and damage the machinery and equipment.

Maintenance

⚠Warning

1. Follow the procedures given in the operation manual to perform a maintenance inspection. Improper handling could lead to malfunction or damage the machinery and equipment.

2. During a maintenance inspection, do not disassemble the equipment with electrical power or with an air supply applied.

3. After the product has been disassembled for inspection, make sure to perform the appropriate functionality inspection.

The product specifications cannot be met unless a functionality inspection is performed.

⚠Caution

1. For lubrication, use the type of grease that is used for the respective product.

The use of a non-designated lubricant could damage the seals.

2. Series MSQ: Because sizes 1, 2, 3 and 7 require special tools, they cannot be disassembled. Because sizes 10, 20, 30 and 50 have the table press fit into an angular type bearing, they cannot be disassembled.