Doc. No. VH*-OMQ0023-C

Operation Manual

PRODUCT NAME

Pressure Relief 3 Port Valve With Locking Holes

MODEL / Series / Product Number

VHS20-(F,N)01~02A,B(-B,S)(-K,R,Z)
VHS30-(F,N)02~03A,B(-B,S)(-K,R,Z)
VHS40-(F,N)02~04A,B(-B,S)(-K,R,Z)
VHS40-(F,N)06A,B(-B,S)(-K,R,Z)
VHS50-(F,N)06~10A,B(-B,S)(-K,R,Z)

VHS2510-(F,N)01~02A,B(-B,S)(-K,R,Z)
VHS3510-(F,N)02~03A,B(-B,S)(-K,R,Z)
VHS4510-(F,N)02~04A,B(-B,S)(-K,R,Z)
VHS4510-(F,N)06A,B(-B,S)(-K,R,Z)
VHS5510-(F,N)06~10A,B(-B,S)(-R,Z)

SMC Corporation

Contents

	PAGE
1. SAFETY INSTRUCTIONS	1~5
2. APPLICATION	6
3. SPECIFICATIONS	6~7
4. HOW TO ORDER	7~8
5. CONSTRUCTION / PARTS LIST	9~10
6. OPTIONAL ASSEMBLY	11
7. DIMENSIONS	12~13

Pressure Relief 3 Port Valve With Locking Holes Safety Instructions

These safety instructions are intended to prevent hazardous situations and/or equipment damage.
These instructions indicate the level of potential hazard with the labels of “Caution,” “Warning” or “Danger.” They are all important notes for safety and must be followed in addition to International Standards (ISO/IEC)[*1)], and other safety regulations.

*1) ISO 4414: Pneumatic fluid power -- General rules relating to systems.
ISO 4413: Hydraulic fluid power -- General rules relating to systems.
IEC 60204-1: Safety of machinery -- Electrical equipment of machines .(Part 1: General requirements)
ISO 10218-1992: Manipulating industrial robots -Safety.
etc.

⚠ **Caution**	**Caution** indicates a hazard with a low level of risk which, if not avoided, could result in minor or moderate injury.
⚠ **Warning**	**Warning** indicates a hazard with a medium level of risk which, if not avoided, could result in death or serious injury.
⚠ **Danger**	**Danger** indicates a hazard with a high level of risk which, if not avoided, will result in death or serious injury.

⚠ Warning

1. The compatibility of the product is the responsibility of the person who designs the equipment or decides its specifications.

Since the product specified here is used under various operating conditions, its compatibility with specific equipment must be decided by the person who designs the equipment or decides its specifications based on necessary analysis and test results.

The expected performance and safety assurance of the equipment will be the responsibility of the person who has determined its compatibility with the product.

This person should also continuously review all specifications of the product referring to its latest catalog information, with a view to giving due consideration to any possibility of equipment failure when configuring the equipment.

2. Only personnel with appropriate training should operate machinery and equipment.

The product specified here may become unsafe if handled incorrectly.

The assembly, operation and maintenance of machines or equipment including our products must be performed by an operator who is appropriately trained and experienced.

3. Do not service or attempt to remove product and machinery/equipment until safety is confirmed.

1.The inspection and maintenance of machinery/equipment should only be performed after measures to prevent falling or runaway of the driven objects have been confirmed.

2.When the product is to be removed, confirm that the safety measures as mentioned above are implemented and the power from any appropriate source is cut, and read and understand the specific product precautions of all relevant products carefully.

3. Before machinery/equipment is restarted, take measures to prevent unexpected operation and malfunction.

4. Contact SMC beforehand and take special consideration of safety measures if the product is to be used in any of the following conditions.

1. Conditions and environments outside of the given specifications, or use outdoors or in a place exposed to direct sunlight.
2. Installation on equipment in conjunction with atomic energy, railways, air navigation, space, shipping, vehicles, military, medical treatment, combustion and recreation, or equipment in contact with food and beverages, emergency stop circuits, clutch and brake circuits in press applications, safety equipment or other applications unsuitable for the standard specifications described in the product catalog.
3. An application which could have negative effects on people, property, or animals requiring special safety analysis.
4. Use in an interlock circuit, which requires the provision of double interlock for possible failure by using a mechanical protective function, and periodical checks to confirm proper operation.

Pressure Relief 3 Port Valve With Locking Holes Safety Instructions

⚠ Caution

1.The product is provided for use in manufacturing industries.
The product herein described is basically provided for peaceful use in manufacturing industries.
If considering using the product in other industries, consult SMC beforehand and exchange specifications or a contract if necessary.
If anything is unclear, contact your nearest sales branch.

Limited warranty and Disclaimer/Compliance Requirements

The product used is subject to the following “Limited warranty and Disclaimer” and “Compliance Requirements”.
Read and accept them before using the product.

Limited warranty and Disclaimer

1.The warranty period of the product is 1 year in service or 1.5 years after the product is delivered, whichever is first.*2)
Also, the product may have specified durability, running distance or replacement parts. Please consult your nearest sales branch.

2. For any failure or damage reported within the warranty period which is clearly our responsibility, a replacement product or necessary parts will be provided.
This limited warranty applies only to our product independently, and not to any other damage incurred due to the failure of the product.

3. Prior to using SMC products, please read and understand the warranty terms and disclaimers noted in the specified catalog for the particular products.

∗2) Vacuum pads are excluded from this 1 year warranty.
A vacuum pad is a consumable part, so it is warranted for a year after it is delivered.
Also, even within the warranty period, the wear of a product due to the use of the vacuum pad or failure due to the deterioration of rubber material are not covered by the limited warranty.

Compliance Requirements

1. **The use of SMC products with production equipment for the manufacture of weapons of mass destruction (WMD) or any other weapon is strictly prohibited.**
2. **The exports of SMC products or technology from one country to another are governed by the relevant security laws and regulations of the countries involved in the transaction. Prior to the shipment of a SMC product to another country, assure that all local rules governing that export are known and followed.**

Precautions on Design

⚠ Warning

1. Please consult with SMC in cases where the ambient environment does not permit leakage or if a fluid other than air is used.
2. Do not apply negative pressure. It may result in malfunction.
3. Do not supply air pressure from ports other than the 1(P) port. The valve will malfunction when air pressure is supplied from other ports.

Selection

⚠ Warning

1. In some cases, mineral oil grease used for internal parts and sealant may be exhausted. Please contact SMC if this causes any inconvenience in use.

Installation and Adjustment

⚠ Warning

1. Confirm the symbols “1” and “2” before the valve is connected. The port marked “1”is the air inlet and the port marked “2” is the outlet.
   Pressurization is only possible via the inlet port “1”. Reverse connection may cause malfunction. The port symbols and corresponding piping types are shown in the table below.

Port symbol	Piping type
1	Inlet
2	Outlet
3	Exhaust

⚠ Caution

1. The valve must be switched to each position instantly and securely. Stopping the knob between the extreme positions may cause malfunction.
2. Do not remove the mounting screws from the bonnet. This may cause malfunction.
3. Double action type requires two actions (push the handle + turn). Confirm that the handle is pushed properly before turning it. If the handle is not pushed properly to the end, the internal parts will be broken by turning the handle.

Piping

⚠ Warning

1. Before piping is connected, the pipes should be thoroughly blown through with air (flushing) or washed to remove chips, cutting oil and other debris from inside. Should they remain, they could cause malfunction.
2. When connecting pipes and fittings, etc., be sure that neither chips from the pipe threads nor sealing material get inside the valve. When using sealant tape, leave 1.5 to 2 thread ridges exposed at the end of the pipe/fitting.
3. When screwing a piping component into the valve, secure the female threaded side and apply the recommended tightening torque. Under tightening may result in loosening or sealing failure while over tightening may cause damage to threads and other problems.

Recommended tightening torque Unit: N-m

Connection thread	1/8	1/4	3/8	1/2	3/4	1
Torque	7 to 9	12 to 14	22 to 24	28 to 30	28 to 30	36 to 38

Air Supply

⚠ Warning

1. Use clean air. Do not use compressed air which contains chemicals, synthetic oils containing organic solvents, salts or corrosive gases, etc., as this can cause damage or malfunction.
2. Install an air dryer or after cooler on the upstream side of the pressure release 3 port valve because air containing excessive drainage may cause malfunction.

⚠ Caution

1. Install an air filter of 5 μm filtration on inlet side.
2. Install a mist separator on the inlet side to remove carbon powder from the compressor or other equipment. An excessive amount of carbon dust ingress via the inlet may cause the valve to malfunction.

Refer to SMC's "Air Cleaning Equipment" catalog for further details on compressed air quality.

Operating Environment

⚠ Warning

1. Do not use valves where there is direct contact with, or in atmospheres of, corrosive gases, chemicals, salts water or steam.
2. Do not use in an explosive atmosphere.
3. Do not use in locations subject to vibration or impact. Confirm the specifications for each series.

4. A protective cover should be used to shield valves from direct sunlight.
5. Shield valves from radiated heat generated by nearby heat sources.
6. Employ suitable protective measures in locations where there is contact with water droplets, oil, or welding spatter.
7. Install a silencer into port (3) to prevent the ingress of dust if there is a lot of dust in the atmosphere. If dust enters the valve via port (3), it may cause air leakage.

If above conditions are applicable, use metal handle / bonnet type for your safety.

Maintenance

⚠ Warning

1. Perform maintenance procedures as shown in the instruction manual. If handled improperly, malfunction or damage of machinery or equipment may occur.
2. Do not disassemble the product. Improper handling will cause malfunction or breakage of the machinery or equipment.
3. When equipment is to be removed, first confirm that measures are in place to prevent dropping of driven objects and run-away of equipment, etc. Then cut the supply air pressure and electric power, and exhaust all compressed air from the system using its residual pressure release function.
   When the equipment is to be started again after remounting or replacement, first confirm that measures are in place to prevent lurching of actuators and then confirm that equipment operates normally.

⚠ Caution

1. Once lubricant is introduced, be sure to continue lubrication. If it is discontinued, malfunction may result due to loss of the initial lubricant. Apply class 1 turbine oil (ISO VG32) as a lubricant. Use of other lubricants may cause malfunction.

Built-in Silencer (Option)
Bronze Sintered Metal Element

⚠ Caution

1. Products made of bronze may contain uneven color due to the oxidization process of the atmosphere. However, this oxidization process occurs in the limited range of less than 1 μm of thickness and is so thin as to not affect the product characteristics. The uneven color occurs depending on the storage duration before utilization (stock as a product, stock in customers).
   * If this is a problem, please contact SMC so that SMC can pre-treat them with nickel plating.

2. Applications

This product is a residual pressure release valve which is switched by hand.

3. Standard specifications

(1) Single action type

Model		VHS20	VHS30	VHS40	VHS40-06	VHS50
Fluid		Air				
Ambient and fluid temperature		-5 to 60°C (No freezing)				
Proof pressure		1.5MPa				
Operating pressure range		0.1 to 1.0MPa				
Color (Standard)		Handle: Red Body: White				
Handle operation	Pushing stroke	-		-		
	Switching angle	90°				
Handle operating force	Push force Note1)	-				
	Rotating torque Note1)	0.7N-m or less	1.0N-m or less	3.0N-m or less	3.0N-m or less	3.5N-m or less
Mass (Handle / Bonnet material)	A (Flame resistant PBT)	76g	127g	247g	293g	532g
	B (Aluminum)	92g	156g	301g	349g	630g

(2) Double action type

Model		VHS2510	VHS3510	VHS4510	VHS4510-06	VHS5510
Fluid		Air				
Ambient and fluid temperature		-5 to 60°C (No freezing)				
Proof pressure		1.5MPa				
Operating pressure range		0.1 to 1.0MPa				
Color (Standard)		Handle: Red Body: White				
Handle operation	Pushing stroke	3.2mm		4.2mm		
	Switching angle	90°				
Handle operating force	Push force Note1)	10N or less				
	Rotating torque Note1)	0.7N-m or less	1.0N-m or less	3.0N-m or less	3.0N-m or less	3.5N-m or less
Mass (Handle / Bonnet material)	A (Flame resistant PBT)	77g	129g	250g	296g	536g
	B (Aluminum)	93g	158g	304g	352g	635g

Note 1) Supply pressure: 1.0 MPa

Flow characteristics

Model	Port size		Supply （IN→OUT）			Exhaust （OUT→EXH）		
	IN, OUT	EXH	C(dm³/S-bar)	b	Cv	C(dm³/S-bar)	b	Cv
VHS20 VHS2510	1/8	1/8	2.4	0.43	0.65	2.5	0.39	0.69
	1/4		3.3	0.40	0.88	3.1	0.51	0.84
VHS30 VHS3510	1/4	1/4	6.4	0.45	1.7	6.2	0.38	1.7
	3/8		8.3	0.41	2.3	7.0	0.41	1.9
VHS40 VHS4510	1/4	3/8	7.3	0.49	2.0	8.5	0.35	2.3
	3/8		10.9	0.45	3.0	11.6	0.40	3.1
	1/2		14.2	0.39	3.8	13.3	0.43	3.6
VHS40-06 VHS4510-06	3/4	1/2	18.3	0.31	5.0	17.7	0.37	4.8
VHS50 VHS5510	3/4	1/2	23.8	0.41	6.4	21.8	0.41	5.9
	1		31.9	0.33	8.6	23.5	0.44	6.4

4. How to Order

(1) Single action type

VHS 40 – [ ] 04 A – BS – [ ] – [ ]

Body size
20
30
40
50

Thread type	
Nil	Rc
F	G
N	NPT

Port size		Body size			
Symbol	Port size	20	30	40	50
01	1/8	X			
02	1/4	X	X	X	
03	3/8		X	X	
04	1/2			X	
06	3/4			X	X
10	1				X

Handle / Bonnet material	
A	Flame resistant PBT
B	Aluminum

Made to Order	
X1	Body: Red

Option	
Symbol	Description
Nil	-
K	Handle color: Black
R	Flow direction: Right→Left
Z Note1)	psi as unit displayed on label

Note 1) Only for NPT thread.
Under the New Measurement Law, products for overseas use only (SI unit type for use in Japan).

Options	
Nil	-
B	With bracket
S	Built-in Silencer (EXH port)

B: Packed together
S: Assembled for shipping

(2) Double action type

VHS 4 510 – ☐ 04 A – BS – ☐ – ☐

Body size
2
3
4
5

Double Action

Thread type	
Nil	Rc
F	G
N	NPT

Made to Order	
X1	Red body

Option	
Symbol	Description
Nil	-
K	Handle color: Black
R	Flow direction: Right→Left
Z[Note1]	psi as unit displayed on label

Note 1) Only for NPT thread.
Under the New Measurement Law, products for overseas use only (SI unit type for use in Japan).

Port size		Body size			
Symbol	Port size	2	3	4	5
01	1/8	X			
02	1/4	X	X	X	
03	3/8		X	X	
04	1/2			X	
06	3/4			X	X
10	1				X

Handle / Bonnet material	
A	Flame resistant PBT
B	Aluminum

Options	
Nil	-
B	With bracket
S	Built-in Silencer (EXH port)

B: Packed together
S: Assembled for shipping

For connection of the modular type FRL combination, the spacer or the spacer with bracket shown below is necessary. Please order separately.

3-port valve for residual pressure release	Spacer p/n	With bracket Spacer p/n	Applicable air combination
VHS20, VHS2510	Y200-A	Y200T-A	AC20-A
VHS30, VHS3510	Y300-A	Y300T-A	AC25-A, AC30-A
VHS40, VHS4510	Y400-A	Y400T-A	AC40-A
VHS40-06, VHS4510-06	Y500-A	Y500T-A	AC40-06-A
VHS50, VHS5510	Y600	Y600T	AC50, AC55, AC60

* New VHS series compatible with Old spacer Y200(T) to Y600(T) and Old AC20 to AC60.



Spacer



Spacer with bracket

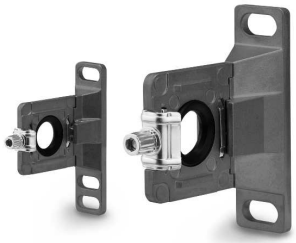

5. Construction/Parts list

(1) Standard

VHS20～50-A
VHS2510～5510-A

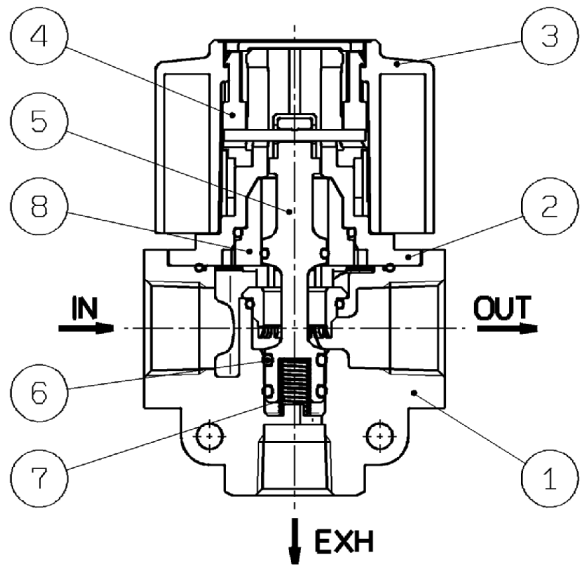

VHS20～50-B
VHS2510～5510-B

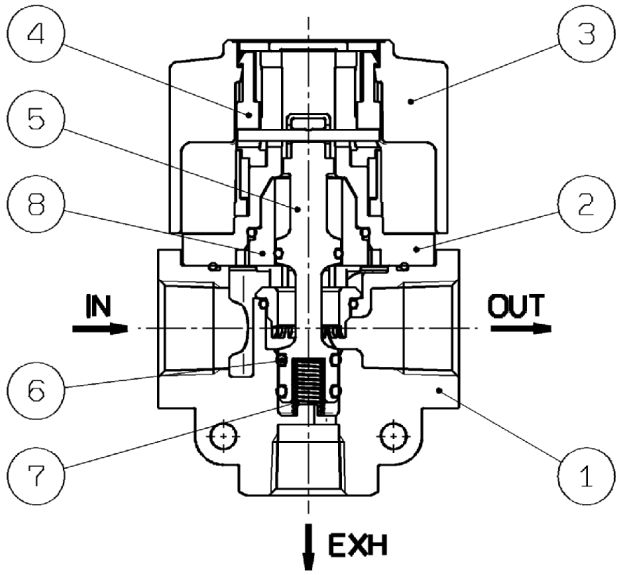

No.	Description	Material		Note
		VHS20~50-A VHS2510~5510-A	VHS20~50-B VHS2510~5510-B	
1	Body	ADC12		White
2	Bonnet	Flame resistant PBT (Equivalent to UL-94 Standard V-0)	ADC12	White
3	Handle	Flame resistant PBT (Equivalent to UL-94 Standard V-0)	ADC12	Red
4	Cam ring	POM		-
5	Spool	PBT		-
6	Spool O-ring	H-NBR		-
7	Spool spring	Stainless steel		-
8	Sleeve	POM		-

* VHS series cannot be disassembled. No repair parts available.

(2) Optional specifications

Option B
With bracket

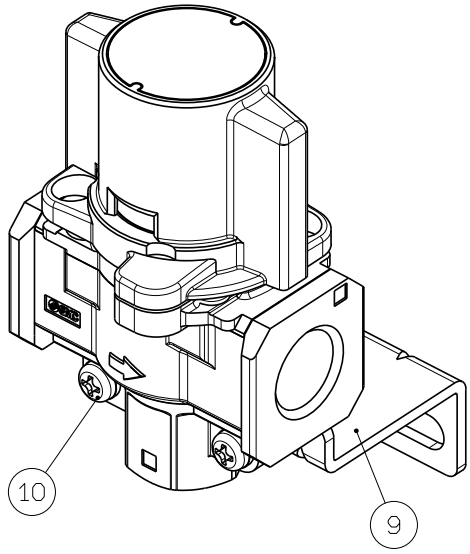

Option S
Built-in Silencer (EXH port)

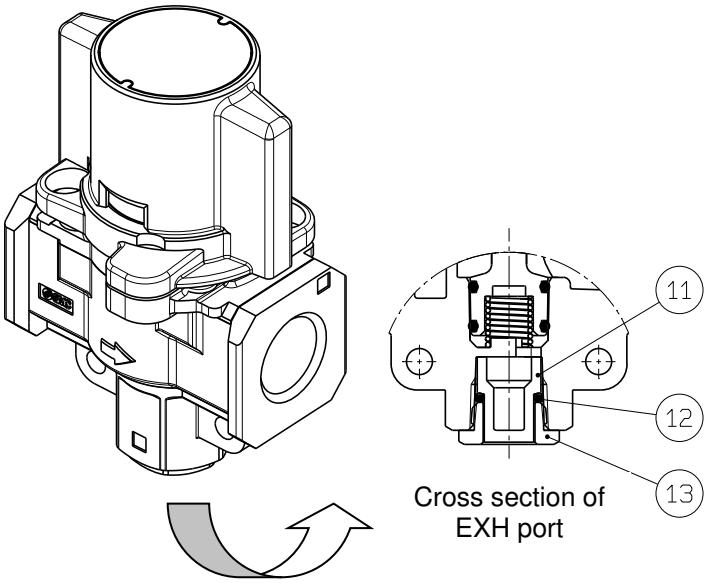

Optional parts

3-port valve for residual pressure release	Bracket assembly p/n	Silencer assembly p/n
VHS20, VHS2510	VHS20PW-180AS	VHS20PW-190AS
VHS30, VHS3510	VHS30PW-180AS	VHS30PW-190AS
VHS40, VHS4510	VHS40PW-180AS	VHS40PW-190AS
VHS40-06, VHS4510-06	VHS40PW-180-06AS	VHS40PW-190-06AS
VHS50, VHS5510	VHS50PW-180AS	VHS50PW-190AS

Construction of Optional parts

No.	Description	Material	Bracket assembly	Silencer assembly	Note
9	Bracket	SPCC	1 pc		Zinc chromate
10	Mounting screw	Steel wire	2 pc		Zinc chromate
11	Element	BC		1 pc	-
12	Element O ring	NBR		1 pc	-
13	Element cover	C3604		1 pc	-

6. Assembly of Optional parts

(1) Bracket assembly

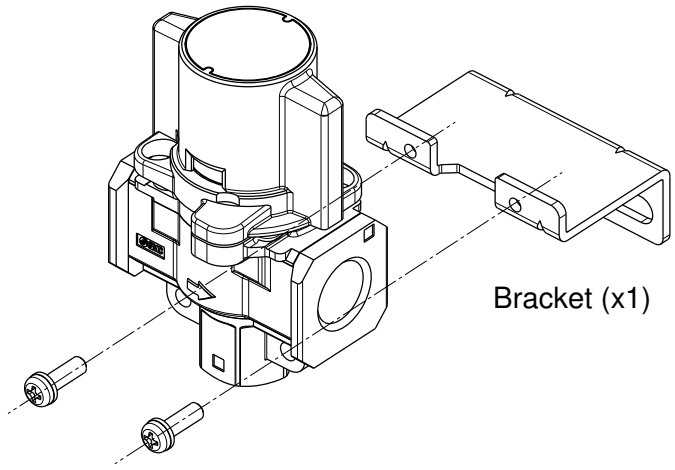

1) Installation of bracket
   Align two holes of the bracket with the holes at the bottom of the product. (See drawing on the left)
2) Tightening of screw
   Insert the mounting screws (cross recessed head screw with captive washer) to the holes of the product at the opposite side of the bracket, and tighten the screws to hold the bracket.

*Use a phillips head screwdriver for tightening the screws.

Bracket assembly p/n	Cross recessed head screw size
VHS20PW-180AS	M4x14
VHS30PW-180AS	M4x14
VHS40PW-180AS	M5x16
VHS40PW-180-06 AS	M5x16
VHS50PW-180AS	M6x20

(2) Silencer assembly

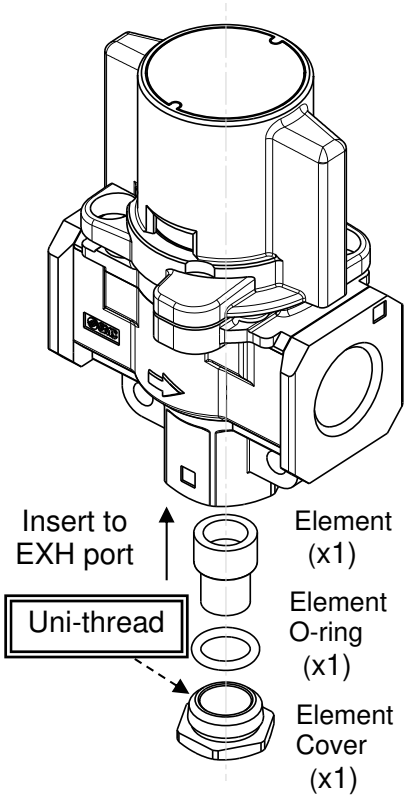

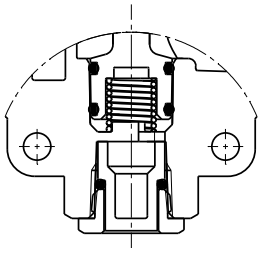
Cross section of EXH port Silencer assembly Mounting condition

1) Mounting of the element
   After inserting the element o-ring to the element, insert the element to EXH port.
2) Tightening of the screw of the element cover
   Mount the element cover to the female thread of EXH port

*The male thread of the element cover is Uni-thread. It is applicable to all thread types of Rc/G/NPT.

*Refer to the table below for the tightening torque of the element.

Silencer assembly p/n	Uni-thread size	Tightening Torque [N-m]	Noise Reduction [dB] Note1)
VHS20PW-190AS	Uni1/8	3 to 4	17
VHS30PW-190AS	Uni1/4	4 to 5	21
VHS40PW-190AS	Uni3/8	8 to 9	25
VHS40PW-190-06AS	Uni1/2	14 to 15	22
VHS50PW-190AS	Uni1/2	14 to 15	26

Note 1) Reference data.

7. Dimensions

(1) Single action type

VHS40~50

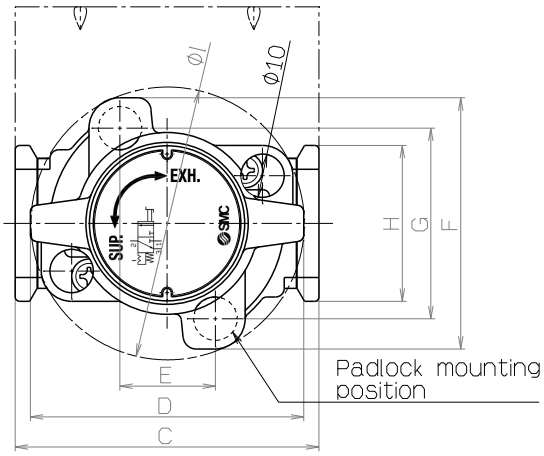

VHS30

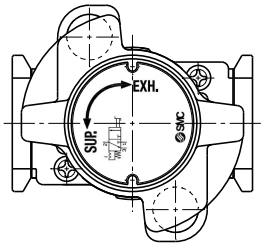

VHS20

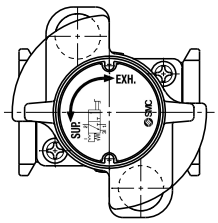

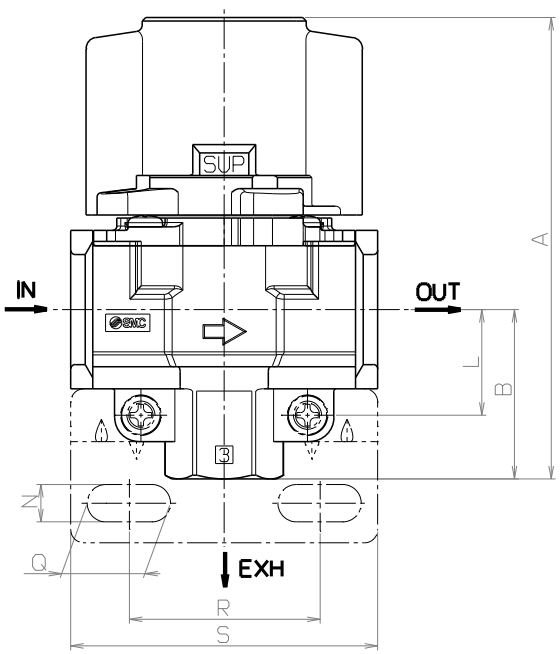

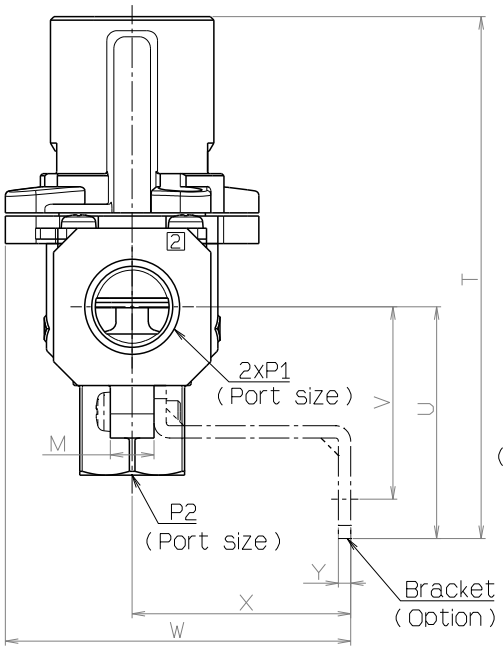

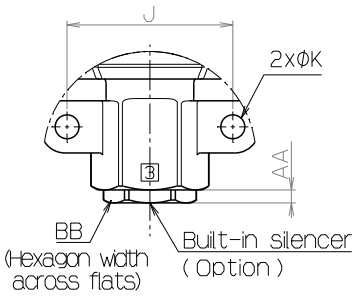

Unit (mm)

Model	Standard Specifications														
	P1	P2	A	B	C	D	E	F	G	H	I	J	K	L	M
VHS20	1/8, 1/4	1/8	66.4	22.3	40	37.5	14	46.6	33.6	28	43	24	4.5	14.8	9
VHS30	1/4, 3/8	1/4	80.3	29.4	53	49	19	52	38	30	49	30	4.5	19	9
VHS40	1/4, 3/8, 1/2	3/8	104.9	38.5	70	63	22	58	44	36	63	38	5.5	24	10
VHS40-06	3/4	1/2	110.4	42	75	63	22	58	44	44	63	43	5.5	26	10
VHS50	3/4, 1	1/2	134.3	53	90	76	26	76	61	53	81	50	6.5	31	12

Model	Optional Specifications											
	With bracket										Built-in silencer	
	N	Q	R	S	T	U	V	W	X	Y	AA	BB
VHS20	5.4	8.4	27	40	75.4	31.3	25.3	53.3	30	2.3	3	12
VHS30	6.5	10	36.5	53	90.9	40	33	67	41	2.3	3	14
VHS40	8.5	19	43.5	70	119.4	53	44	79	50	2.8	3	19
VHS40-06	8.5	19	43.5	70	123.4	55	46	79	50	2.8	4	22
VHS50	11	27.5	49.5	90	152.3	71	60	108	70	3.2	4	22

(2) Double action type

VHS4510~5510

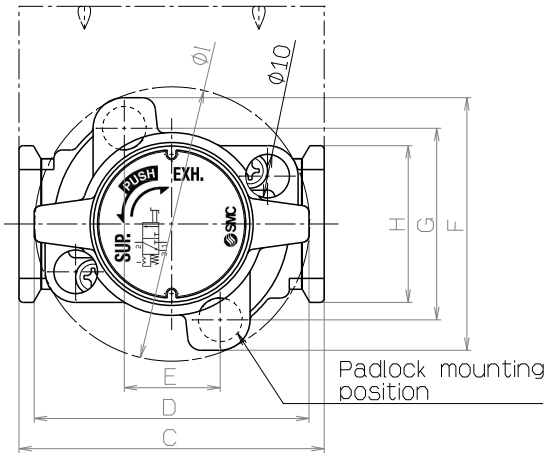

VHS3510

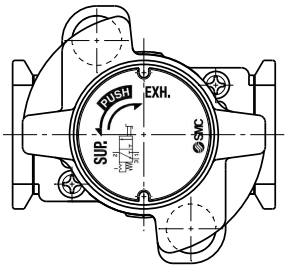

VHS2510

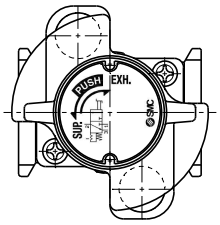

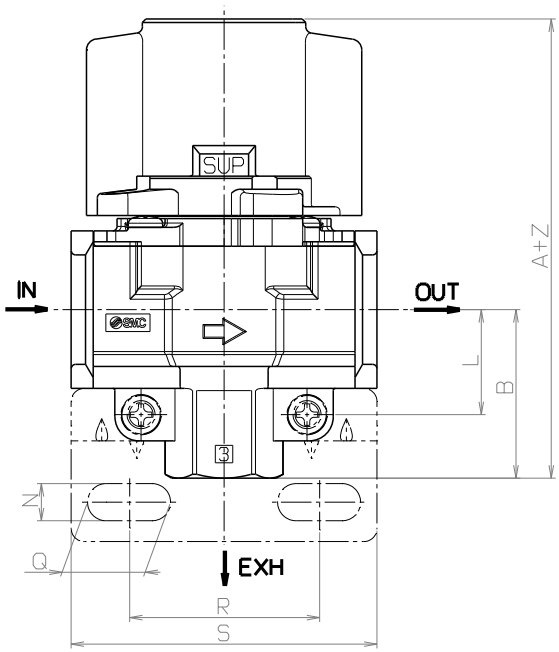

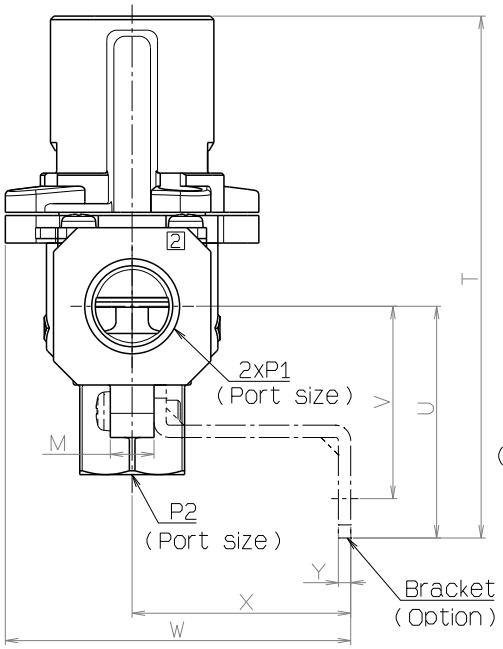

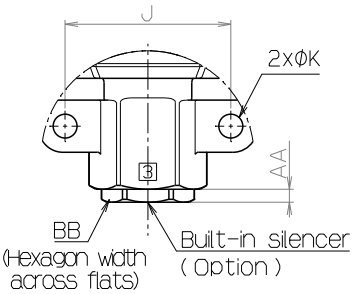

Unit (mm)

Model	Standard Specifications															
	P1	P2	A	B	C	D	E	F	G	H	I	J	K	L	M	Z
VHS2510	1/8, 1/4	1/8	66.4	22.3	40	37.5	14	46.6	33.6	28	43	24	4.5	14.8	9	3.2
VHS3510	1/4, 3/8	1/4	80.3	29.4	53	49	19	52	38	30	49	30	4.5	19	9	3.2
VHS4510	1/4, 3/8, 1/2	3/8	104.9	38.5	70	63	22	58	44	36	63	38	5.5	24	10	4.2
VHS4510-06	3/4	1/2	110.4	42	75	63	22	58	44	44	63	43	5.5	26	10	4.2
VHS5510	3/4, 1	1/2	134.3	53	90	76	26	76	61	53	81	50	6.5	31	12	4.2

Model	Optional Specifications											
	With bracket										Built-in silencer	
	N	Q	R	S	T	U	V	W	X	Y	AA	BB
VHS2510	5.4	8.4	27	40	75.4	31.3	25.3	53.3	30	2.3	3	12
VHS3510	6.5	10	36.5	53	90.9	40	33	67	41	2.3	3	14
VHS4510	8.5	19	43.5	70	119.4	53	44	79	50	2.8	3	19
VHS4510-06	8.5	19	43.5	70	123.4	55	46	79	50	2.8	4	22
VHS5510	11	27.5	49.5	90	152.3	71	60	108	70	3.2	4	22

Revision history
Rev. A - Semi-standard "K" type added (Black handle) - Revision of safety precaution (Piping / Installation and Adjustment / Operating Environment) - Revision of the product number of spacer, addition of interchangeability of old and new products - Addition of noise reduction effect of silencer assembly Rev. B - Revision of the figure of dimension for VHS20/VHS2510. - Revision of the dimension “l” for VHS20/VHS2510 in the dimension table. Rev. C – Update the photos of Spacer and Spacer with bracket to the latest version. – Update the Construction to the latest version. – Correct Silencer assembly P/N

SMC Corporation

4-14-1, Sotokanda, Chiyoda-ku, Tokyo 101-0021 JAPAN
Tel: + 81 3 5207 8249 Fax: +81 3 5298 5362
URL https://www.smcworld.com

Note: Specifications are subject to change without prior notice and any obligation on the part of the manufacturer.
© 2019 SMC Corporation All Rights Reserved