Modular/F.R.L. Units

Series AC





Modular F.R.L. Units

Series AC

Improved visibility for lubricant drip
with graduation for lubricant control

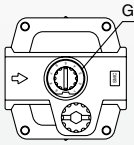

Spacer with bracket

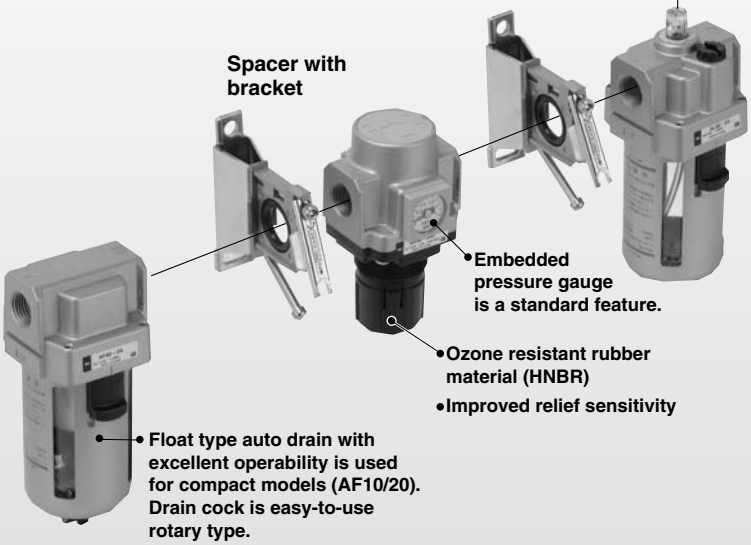

- **Embedded pressure gauge is a standard feature.**
- **Ozone resistant rubber material (HNBR)**
- **Improved relief sensitivity**
- **Float type auto drain with excellent operability is used for compact models (AF10/20). Drain cock is easy-to-use rotary type.**

Improved installation

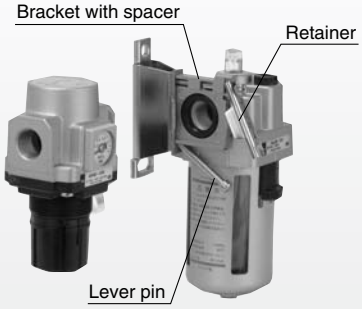

① Attach the component into the fitting of the spacer with bracket.
② Lock the lever pin into the retainer. (temporary installation)

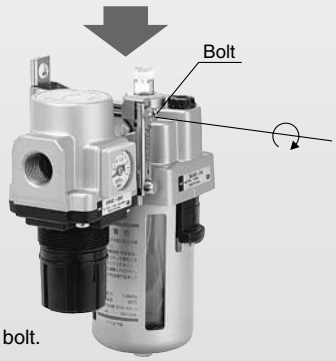

③ Tighten the bolt.

Round type pressure gauge (with color zone) type

Red and green zones offer improved visibility of pressure control range.



Indicator adjusts to highlight preferred range







- **Filter Regulator**
  AW20(K) to 60(K)
- **Mist Separator Regulator**
  AWM20 to 40
- **Micro Mist Separator Regulator**
  AWD20 to 40



- **Regulator**
  AR20(K) to 60(K)



- **F.R.L. Unit**

AC20 to 60 (AF + AR + AL)
AC20A to 60A (AW + AL)
AC20B to 60B (AF + AR)
AC20C to 40C (AF + AFM + AR)
AC20D to 40D (AW + AFM)

Series Configuration

Product	Model	Port size							Page
		M5 x 0.8	1/8	1/4	3/8	1/2	3/4	1	
Air Combination									
Air Filter + Regulator + Lubricator **AF AR AL** 	**AC10**	●							300
	AC20		●	●					
	AC25			●	●				
	AC30			●	●				
	AC40			●	●	●			
	AC40-06						●		
	AC50						●	●	
	AC55							●	
	AC60							●	
Filter Regulator + Lubricator **AW AL** 	**AC10A**	●							306
	AC20A		●	●					
	AC30A			●	●				
	AC40A			●	●	●			
	AC40A-06						●		
	AC50A						●	●	
	AC60A							●	
Air Filter + Regulator **AF AR** 	**AC10B**	●							310
	AC20B		●	●					
	AC25B			●	●				
	AC30B			●	●				
	AC40B			●	●	●			
	AC40B-06						●		
	AC50B						●	●	
	AC55B							●	
	AC60B							●	
Air Filter + Mist Separator + Regulator **AF AFM AR** 	**AC20C**		●	●					314
	AC25C			●	●				
	AC30C			●	●				
	AC40C			●	●	●			
	AC40C-06						●		
Filter Regulator + Mist Separator **AW AFM** 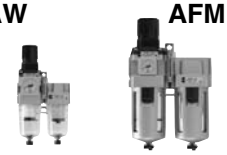	**AC20D**		●	●					318
	AC30D			●	●				
	AC40D			●	●	●			
	AC40D-06						●		

Series Configuration

Product		Model	Port size							Page
			M5 x 0.8	1/8	1/4	3/8	1/2	3/4	1	
Air Filter	AF 	AF10	●							327
		AF20		●	●					
		AF30			●	●				
		AF40			●	●	●			
		AF40-06						●		
		AF50						●	●	
		AF60							●	
Mist Separator	AFM 	AFM20		●	●					338
		AFM30			●	●				
		AFM40			●	●	●			
		AFM40-06						●		
Micro Mist Separator	AFD 	AFD20		●	●					338
		AFD30			●	●				
		AFD40			●	●	●			
		AFD40-06						●		
Regulator	AR 	AR10	●							345
		AR20		●	●					
		AR25			●	●				
		AR30			●	●				
		AR40			●	●	●			
		AR40-06						●		
		AR50						●	●	
		AR60							●	
Regulator with Backflow Function	AR□K 	AR20K		●	●					345
		AR25K			●	●				
		AR30K			●	●				
		AR40K			●	●	●			
		AR40K-06						●		
		AR50K						●	●	
		AR60K							●	

Series Configuration

Product		Model	Port size							Page
			M5 x 0.8	1/8	1/4	3/8	1/2	3/4	1	
Lubricator	AL 	AL10	●							357
		AL20		●	●					
		AL30			●	●				
		AL40			●	●	●			
		AL40-06						●		
		AL50						●	●	
		AL60							●	
Filter Regulator	AW 	AW10	●							365
		AW20		●	●					
		AW30			●	●				
		AW40			●	●	●			
		AW40-06						●		
		AW60						●	●	
Filter Regulator with Backflow Function	AW□K 	AW20K		●	●					365
		AW30K			●	●				
		AW40K			●	●	●			
		AW40K-06						●		
		AW60K						●	●	
Mist Separator Regulator	AWM 	AWM20		●	●					378
		AWM30			●	●				
		AWM40			●	●	●			
Micro Mist Separator Regulator	AWD 	AWD20		●	●					378
		AWD30			●	●				
		AWD40			●	●	●			

Simple Specials System

A system designed to respond quickly and easily to your special ordering needs.

Simple Specials System

Short lead times

This system enables us to respond to your special needs, such as additional machining, accessory assembly, or modular unit, and deliver such special products as quickly as standard products.

Repeat orders

Once we receive a Simple Special part number from your previous order, we will process the order, manufacture the product, and deliver it to you.

Air Combination

Air Filter + Regulator + Lubricator

AC10 to AC60

JIS Symbol

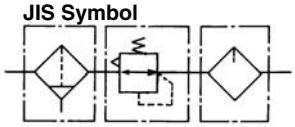

Air Filter Regulator Lubricator

How to Order

AC **30** – ❷ **03** **DE** – ❺ – ❻

- Option/Semi-standard: Select one each for **a** to **m**.
- Option/Attachment/Semi-standard symbol: When more than one specification is required, indicate in alphanumeric order.

Example) AC30-F03DE1-KSTV-136NR

			Symbol	Description	❶ Body size 10	20	25	30	40	50	55	60
❷	Thread type		Nil	Metric thread (M5)	●	—	—	—	—	—	—	—
				Rc	—	●	●	●	●	●	●	●
			N Note 1)	NPT	—	●	●	●	●	●	●	●
			F Note 2)	G	—	●	●	●	●	●	●	●
			+									
❸	Port size		M5	M5	●	—	—	—	—	—	—	—
			01	1/8	—	●	—	—	—	—	—	—
			02	1/4	—	●	●	●	●	—	—	—
			03	3/8	—	—	●	●	●	—	—	—
			04	1/2	—	—	—	—	●	—	—	—
			06	3/4	—	—	—	—	●	●	—	—
			10	1	—	—	—	—	—	●	●	●
			+									
❹	Option Note 3)	a	Nil	Without auto drain	●	●	●	●	●	●	●	●
		Float type auto drain	C	Float type auto drain (N.C.)	●	●	●	●	●	●	●	●
			D	Float type auto drain (N.O.)	—	—	●	●	●	●	●	●
			+									
		b	Nil	Without pressure gauge	●	●	●	●	●	●	●	●
		Pressure gauge	E	Square embedded type pressure gauge (with limit indicator)	—	●	●	●	●	●	●	●
			G	Round type pressure gauge (without limit indicator)	●	—	—	—	—	—	—	—
				Round type pressure gauge (with limit indicator)	—	●	●	●	●	●	●	●
			M	Round type pressure gauge (with color zone)	—	●	●	●	●	●	●	●
		Digital pressure switch	E1	Output: NPN output / Electrical entry: Wiring bottom entry	—	●	●	●	●	●	●	●
			E2	Output: NPN output / Electrical entry: Wiring top entry	—	●	●	●	●	●	●	●
			E3	Output: PNP output / Electrical entry: Wiring bottom entry	—	●	●	●	●	●	●	●
			E4	Output: PNP output / Electrical entry: Wiring top entry	—	●	●	●	●	●	●	●
			+									
❺	Attachment	c	Nil	Without attachment	●	●	●	●	●	●	●	●
		Check valve	K	Mounting position: AF+AR+**K**+AL	—	●	●	●	● Note 4)	—	—	—
			+									
		d	Nil	Without attachment	●	●	●	●	●	●	●	●
		Pressure switch	S Note 5)	Mounting position: AF+AR+**S**+AL	—	●	●	●	●	●	●	●
			+									
		e	Nil	Without attachment	●	●	●	●	●	●	●	●
		T-interface	T Note 5)	Mounting position: AF+**T**+AR+AL	●	●	●	●	●	●	●	●
			+									
		f	Nil	Without attachment	●	●	●	●	●	●	●	●
		3-port valve for residual pressure release	V	Mounting position: AF+AR+AL+**V**	—	●	●	●	●	●	—	—
			+									
❻	Semi-standard	g	Nil	0.05 to 0.85 MPa setting	●	●	●	●	●	●	●	●
		Set pressure	1 Note 6)	0.02 to 0.2 MPa setting	●	●	●	●	●	●	●	●
			+									
		h	Nil	Polycarbonate bowl	●	●	●	●	●	●	●	●
		Bowl Note 7)	2	Metal bowl	●	●	●	●	●	●	●	●
			6	Nylon bowl	●	●	●	●	●	●	●	●
			8	Metal bowl with level gauge	—	—	●	●	●	●	●	●
			C	With bowl guard	—	●	—	—	—	—	—	—
			6C	Nylon bowl with bowl guard	—	●	—	—	—	—	—	—

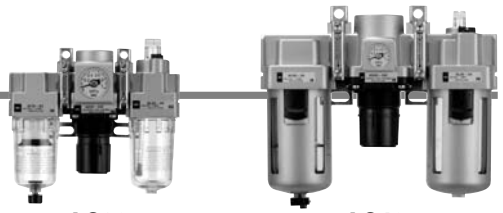

AC20 AC40

		Symbol	Description	❶ Body size 10	20	25	30	40	50	55	60
❻ Semi-standard	i Filter drain port Note 8)	Nil	With drain cock	●	●	●	●	●	●	●	●
		J Note 9)	Drain guide 1/8	—	●	—	—	—	—	—	—
			Drain guide 1/4	—	—	●	●	●	●	●	●
		W Note 10)	Drain cock with barb fitting: For ø6 x ø4 nylon tube	—	—	●	●	●	●	●	●
	+										
	j Lubricator lubricant exhaust port	Nil	Without drain cock	●	●	●	●	●	●	●	●
		3 Note 11)	Lubricator with drain cock	●	●	●	●	●	●	●	●
	+										
	k Exhaust mechanism	Nil	Relieving type	●	●	●	●	●	●	●	●
		N	Non-relieving type	●	●	●	●	●	●	●	●
	+										
	l Flow direction	Nil	Flow direction: Left to right	●	●	●	●	●	●	●	●
		R	Flow direction: Right to left	●	●	●	●	●	●	●	●
	+										
	m Pressure unit	Nil	Name plate and pressure gauge in imperial units: MPa	●	●	●	●	●	●	●	●
		Z Note 12)	Name plate, caution plate for bowl, and pressure gauge in imperial units: psi, °F	○ Note 14)	○ Note 14)	○ Note 14)	○ Note 14)	○ Note 14)	○ Note 14)	○ Note 14)	○ Note 14)
		ZA Note 13)	Digital pressure switch: With unit conversion function	—	△ Note 15)	△ Note 15)	△ Note 15)	△ Note 15)	△ Note 15)	△ Note 15)	△ Note 15)

Note 1) Drain guide is NPT1/8 (applicable to the AC20) and NPT1/4 (applicable to the AC25 to AC60). The auto drain port comes with ø3/8" one-touch fitting (applicable to the AC25 to AC60).
Note 2) Drain guide is G1/8 (applicable to the AC20) and G1/4 (applicable to the AC25 to AC60).
Note 3) Option G, M are not assembled and supplied loose at the time of shipment.
Note 4) Not available with piping port size: 06.
Note 5) The bracket position varies depending on the T-interface or pressure switch mounting.
Note 6) The only difference from the standard specifications is the adjusting spring for the regulator. It does not restrict the setting of 0.2 MPa or more. When the pressure gauge is attached, a 0.2 MPa pressure gauge will be fitted.
Note 7) Refer to Chemical Data on page 287 when selecting a case material.
Note 8) Float type auto drain: The combination of C and D is not possible.
Note 9) Without a valve function
Note 10) Metal bowl: The combination of 2 and 8 is not possible.
Note 11) Filter drain port: When choosing with W, the drain cock of a lubricator will be with barb fittings.
Note 12) For thread type: M5 and NPT. This product is for overseas use only according to the new Measurement Law. (The SI unit type is provided for use in Japan.) The digital pressure switch will be equipped with the unit conversion function, setting to psi initially.
MPa and psi are shown together on the pressure unit.
Note 13) For options: E1, E2, E3, E4. This product is for overseas use only according to the new Measurement Law. (The SI unit is provided for use in Japan.)
Note 14) ○: For thread type: M5 and NPT only
Note 15) △: Select with options: E1, E2, E3, E4.

Standard Specifications

Model		AC10	AC20	AC25	AC30	AC40	AC40-06	AC50	AC55	AC60
Component	Air filter	AF10	AF20	AF30	AF30	AF40	AF40-06	AF50	AF60	AF60
	Regulator	AR10	AR20	AR25	AR30	AR40	AR40-06	AR50	AR50	AR60
	Lubricator	AL10	AL20	AL30	AL30	AL40	AL40-06	AL50	AL60	AL60
Port size		M5 x 0.8	1/8, 1/4	1/4, 3/8	1/4, 3/8	1/4, 3/8, 1/2	3/4	3/4, 1	1	1
Pressure gauge port size Note 1)		1/16	1/8			1/4				
Fluid		Air								
Ambient and fluid temperature Note 2)		–5 to 60°C (with no freezing)								
Proof pressure		1.5 MPa								
Max. operating pressure		1.0 MPa								
Set pressure range		0.05 to 0.7 MPa	0.05 to 0.85 MPa							
Relief pressure		Set pressure + 0.05 MPa Note 3) [at relief flow rate of 0.1 ℓ/min (ANR)]								
Nominal filtration rating		5 μm								
Recommended lubricant		Class 1 turbine oil (ISO VG32)								
Bowl material		Polycarbonate								
Bowl guard		—	Semi-standard	Standard						
Regulator construction		Relieving type								
Mass (kg)		0.27	0.73	0.91	1.00	1.74	1.95	4.17	4.25	4.34

Note 1) Pressure gauge connection threads are not available for F.R.L. unit with a square embedded type pressure gauge or with a digital pressure switch (AC20 to AC60).
Note 2) –5 to 50°C for the products with the digital pressure switch
Note 3) Not applicable to the AC10.

Flow Characteristics (Representative values)

Condition: Inlet pressure 0.7 MPa

AC10 M5 x 0.8

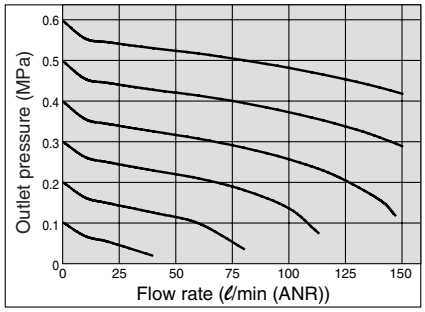

AC20 Rc1/4

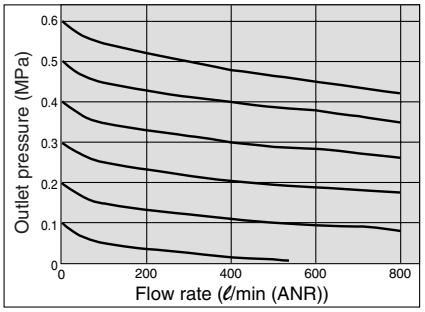

AC25 Rc3/8

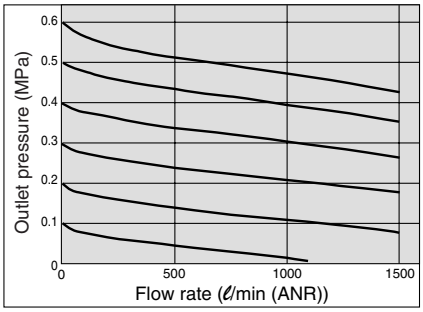

AC30 Rc3/8

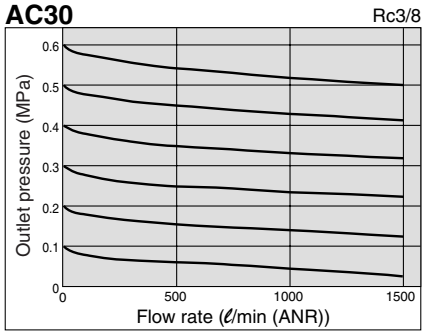

AC40 Rc1/2

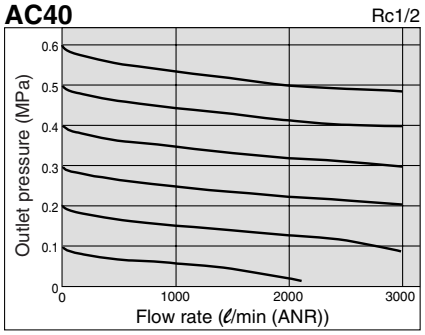

AC40-06 Rc3/4

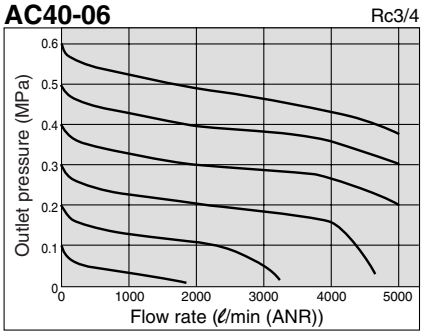

AC50 Rc1

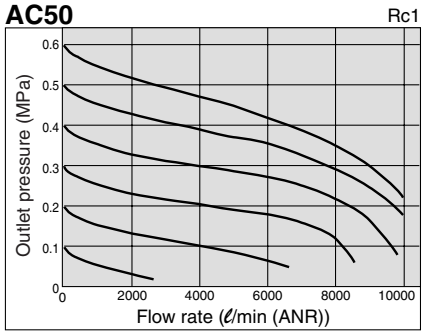

AC55 Rc1

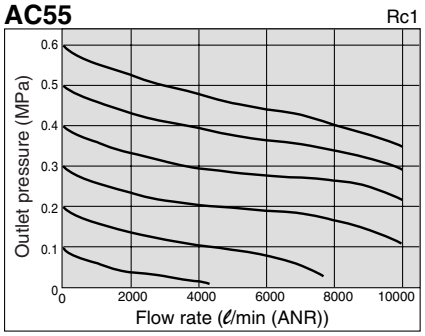

AC60 Rc1

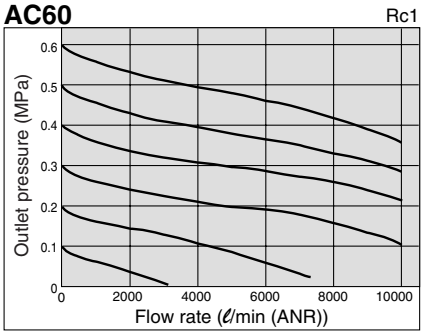

Pressure Characteristics (Representative values)

Conditions: Inlet pressure 0.7 MPa, Outlet pressure 0.2 MPa, Flow rate 20 ℓ/min (ANR)

AC10

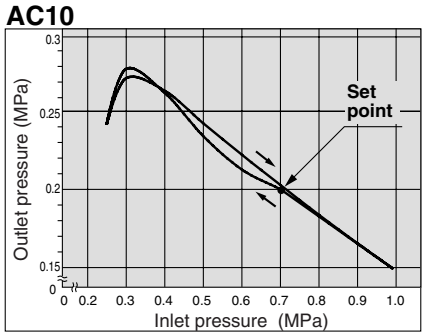

AC20

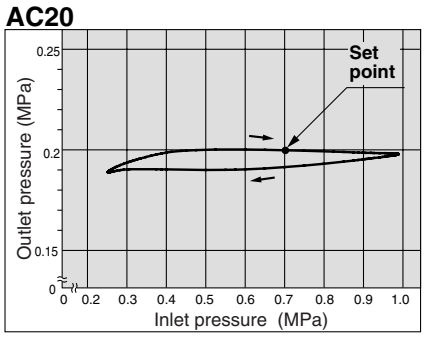

AC25

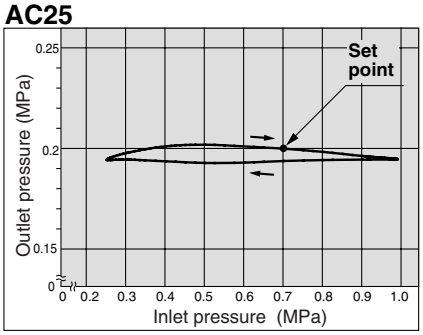

AC30

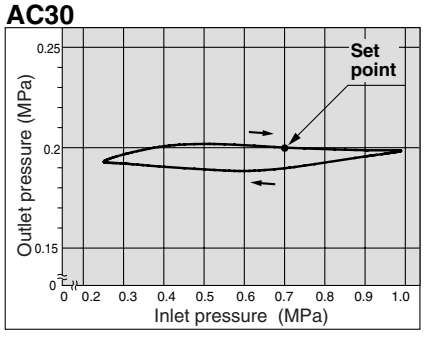

AC40

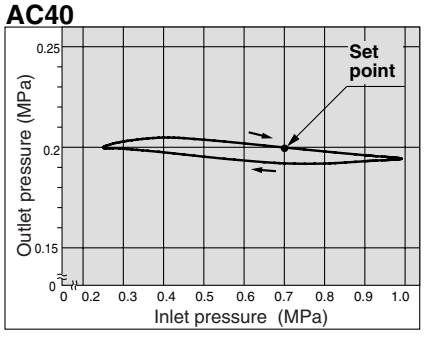

AC40-06

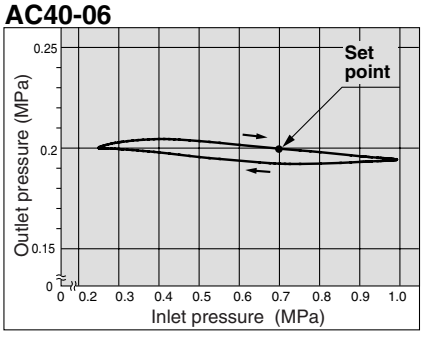

Pressure Characteristics (Representative values)

Conditions: Inlet pressure 0.7 MPa, Outlet pressure 0.2 MPa, Flow rate 20 ℓ/min (ANR)

AC50

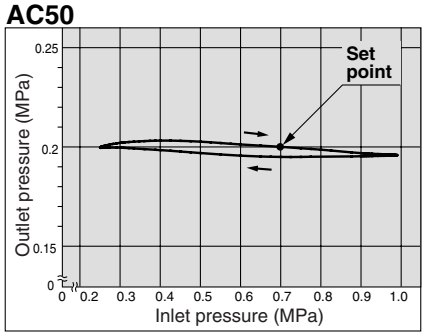

AC55

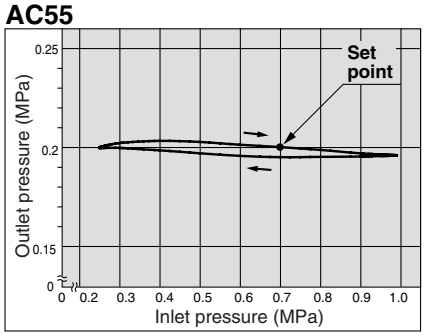

AC60

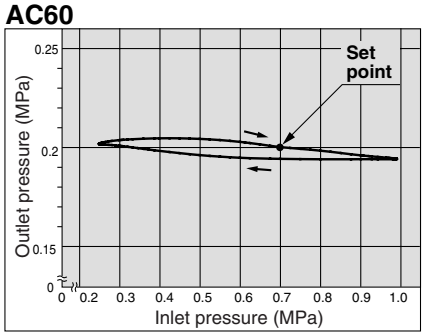

⚠ Specific Product Precautions

Be sure to read before handling.
Refer to front matters 42 and 43 for Safety Instructions and pages 287 to 291 for F.R.L. Precautions.

Mounting and Adjustment

⚠ Caution

1. A knob cover is available to prevent careless operation of the knob. Refer to page 389 for details.

Piping

⚠ Warning

1. When mounting a check valve, make sure the arrow (IN side) points in the correct direction of air flow.

Air Supply

⚠ Caution

1. Use an air filter with 5 μm or less filtration rating on the inlet side of the valve to avoid any damage to the seat caused by dust when mounting a 3-port valve for residual pressure release on the inlet side.

Selection

⚠ Warning

1. Float type auto drain

Operate under the following conditions to avoid malfunction.

<N.O. type>

- Operating compressor: 0.75 kW (100 ℓ/min (ANR)) or more.

  When using 2 or more auto drains, multiply the value above by the number of auto drains to find the capacity of the compressors you will need.

  For example, when using 2 auto drains, 1.5 kW (200 ℓ/min (ANR)) of the compressor capacity is required.
- Operating pressure: 0.1 MPa or more.

<N.C. type>

- Operating pressure for AD17/27: 0.1 MPa or more.
- Operating pressure for AD37/47: 0.15 MPa or more.

2. Use a regulator or filter regulator with backflow function when mounting a 3-port valve for residual pressure release on the IN side to ensure the release of the residual pressure. Otherwise, residual pressure will not be fully released.

⚠ Caution

1. When releasing air at the intermediate position using a T-interface on the inlet side of the lubricator, lubricant may back flow. Therefore, releasing air that does not contain traces of lubricant is not possible.
To release air that does not contain traces of lubricant, use a check valve (AKM series) on the inlet side of the lubricator to prevent a backflow of the lubricant.

2. If a residual pressure-release 3-port valve is mounted on the inlet side of the lubricator, causing a backflow of air, it can result in a backflow of oil or damage to internal parts. Please do not use it in this fashion.

3. An F.R.L. unit shipped from the plant has its model number labeled. However, components that are combined together during the distribution process do not have a label on them.

Dimensions

AC10, AC20

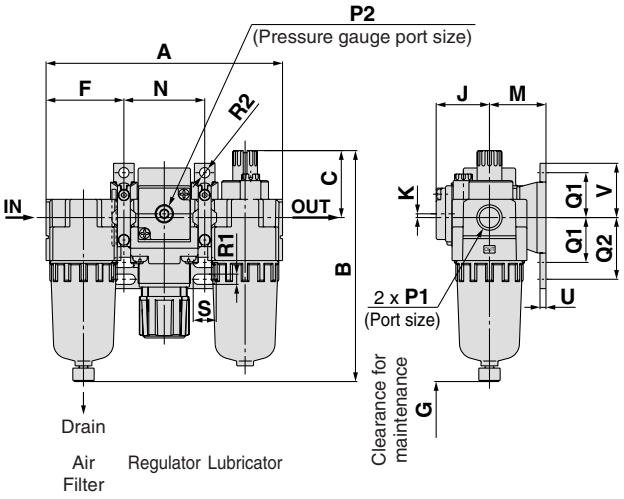

AC25 to AC60

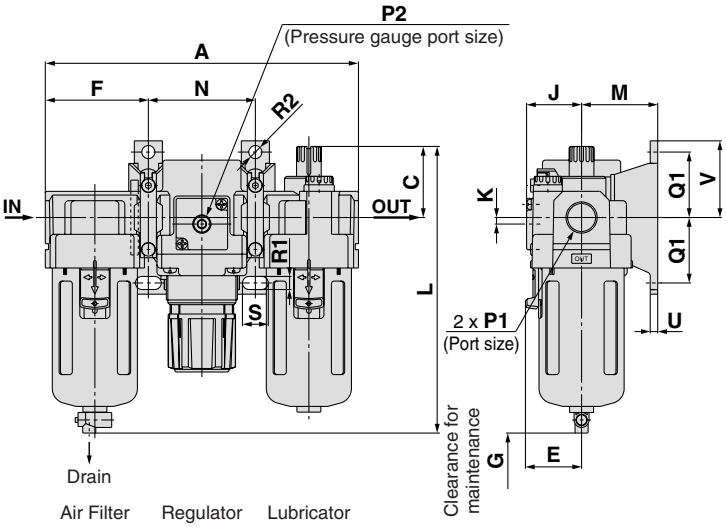

Applicable model	AC20 to AC60		AC10 to AC60	AC20 to AC60
Option	Square embedded type pressure gauge	Digital pressure switch	Round type pressure gauge	Round type pressure gauge (with color zone)
Dimensions	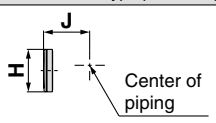	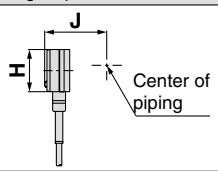	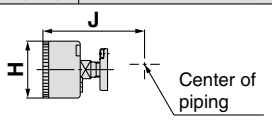	

Applicable model	AC10, AC20		AC20	AC25 to AC60				
Optional/Semi-standard specifications	With auto drain (N.C.)	Metal bowl	With drain guide	With auto drain (N.O./N.C.)	Metal bowl	Metal bowl with level gauge	With drain guide	Drain cock with barb fitting
Dimensions	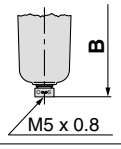	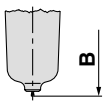	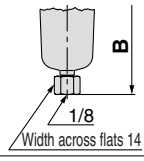	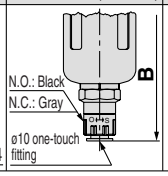	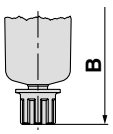	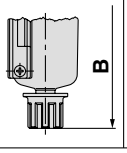	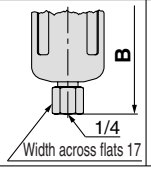	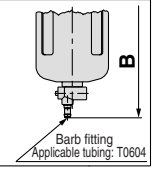

Model	Standard specifications										Optional specifications							
											Square type pressure gauge		Digital pressure switch		Round type pressure gauge		Round type pressure gauge (with color zone)	
	P1	P2	A	B	C	E	F	G	J	K	H	J	H	J	H	J	H	J
AC10	M5 x 0.8	1/16	87	85	26	—	28	35	13	0	—	—	—	—	ø26	26	—	—
AC20	1/8, 1/4	1/8	126	123	36	—	41.5	60	28.5	2 Note)	□28	29.5	□27.8	40	ø37.5	65	ø37.5	65
AC25	1/4, 3/8	1/8	167	153	38	30	55	80	27.5	0	□28	28.5	□27.8	39	ø37.5	64	ø37.5	64
AC30	1/4, 3/8	1/8	167	153	38	30	55	80	29.5	3.5	□28	30.5	□27.8	41	ø37.5	66	ø37.5	66
AC40	1/4, 3/8, 1/2	1/4	220	187	40	38	72.5	110	34	3.5	□28	35	□27.8	45	ø42.5	74	ø42.5	74
AC40-06	3/4	1/4	235	187	38	38	77.5	110	34	3	□28	35	□27.8	45	ø42.5	74	ø42.5	74
AC50	3/4, 1	1/4	282	264	43	45	93	110	43.5	3.3	□28	44.5	□27.8	55	ø42.5	84	ø42.5	84
AC55	1	1/4	292	279	45	47.5	98	110	43.5	3.3	□28	44.5	□27.8	55	ø42.5	84	ø42.5	84
AC60	1	1/4	297	280	46	47.5	98	110	43.5	3.3	□28	44.5	□27.8	55	ø42.5	84	ø42.5	84

Model	Optional specifications									Optional specifications	Semi-standard specifications			
	Bracket mount									With auto drain	With barb fitting	With drain guide	Metal bowl	Metal bowl with level gauge
	M	N	Q1	Q2	R1	R2	S	U	V	B	B	B	B	B
AC10	25	31	20	27	4.5	ø4.5	7	2.8	24.5	104	—	—	85	—
AC20	30	43	24	33	5.5	ø5.5	12	3.2	29	141	—	127	123	—
AC25	41	57	35	—	7	ø7	14	4	41	194	161	160	166	186
AC30	41	57	35	—	7	ø7	14	4	41	194	161	160	166	186
AC40	50	75	40	—	9	ø9	18	4	48	226	195	194	200	220
AC40-06	50	80	40	—	9	ø9	18	4.6	48	226	195	194	200	220
AC50	70	96	50	—	11	ø11	20	6.4	60	303	272	271	276	296
AC55	70	96	50	—	11	ø11	20	6.4	60	318	287	286	292	312
AC60	70	101	50	—	11	ø11	20	6.4	60	319	288	287	293	313

Note) For the AC20 only, the position of the pressure gauge is above the center of the piping.

Air Combination

Filter Regulator + Lubricator

AC10A to AC60A

JIS Symbol

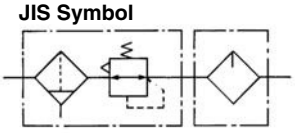

Filter Regulator Lubricator

How to Order

AC 30 A – ❷ 03 DE – ❺ – ❻

❶ ❷ ❸ ❹ ❺ ❻

- Option/Semi-standard: Select one each for **a** to **l**.
- Option/Attachment/Semi-standard symbol: When more than one specification is required, indicate in alphanumeric order.

Example) AC30A-F03DE1-KSV-136NR

			Symbol	Description	❶ Body size 10	20	30	40	50	60
❷	Thread type		Nil	Metric thread (M5)	●	—	—	—	—	—
				Rc	—	●	●	●	●	●
			N Note 1)	NPT	—	●	●	●	●	●
			F Note 2)	G	—	●	●	●	●	●
			+							
❸	Port size		M5	M5	●	—	—	—	—	—
			01	1/8	—	●	—	—	—	—
			02	1/4	—	●	●	●	—	—
			03	3/8	—	—	●	●	—	—
			04	1/2	—	—	—	●	—	—
			06	3/4	—	—	—	●	●	—
			10	1	—	—	—	—	●	●
			+							
❹	Option Note 3)	a	Nil	Without auto drain	●	●	●	●	●	●
		Float type auto drain	C	Float type auto drain (N.C.)	●	●	●	●	●	●
			D	Float type auto drain (N.O.)	—	—	●	●	●	●
			+							
		b	Nil	Without pressure gauge	●	●	●	●	●	●
		Pressure gauge	E	Square embedded type pressure gauge (with limit indicator)	—	●	●	●	●	●
			G	Round type pressure gauge (without limit indicator)	●	—	—	—	—	—
				Round type pressure gauge (with limit indicator)	—	●	●	●	●	●
			M	Round type pressure gauge (with color zone)	—	●	●	●	●	●
		Digital pressure switch	E1	Output: NPN output / Electrical entry: Wiring bottom entry	—	●	●	●	●	●
			E2	Output: NPN output / Electrical entry: Wiring top entry	—	●	●	●	●	●
			E3	Output: PNP output / Electrical entry: Wiring bottom entry	—	●	●	●	●	●
			E4	Output: PNP output / Electrical entry: Wiring top entry	—	●	●	●	●	●
			+							
❺	Attachment	c	Nil	Without attachment	●	●	●	●	●	●
		Check valve	K	Mounting position: AW+**K**+AL	—	●	●	● Note 4)	—	—
			+							
		d	Nil	Without attachment	●	●	●	●	●	●
		Pressure switch	S Note 5)	Mounting position: AW+**S**+AL	—	●	●	●	●	●
			+							
		e	Nil	Without attachment	●	●	●	●	●	●
		3-port valve for residual pressure release	V	Mounting position: AW+AL+**V**	—	●	●	●	●	—
			+							
❻	Semi-standard	f	Nil	0.05 to 0.85 MPa setting	●	●	●	●	●	●
		Set pressure	1 Note 6)	0.02 to 0.2 MPa setting	●	●	●	●	●	●
			+							
		g	Nil	Polycarbonate bowl	●	●	●	●	●	●
		Bowl Note 7)	2	Metal bowl	●	●	●	●	●	●
			6	Nylon bowl	●	●	●	●	●	●
			8	Metal bowl with level gauge	—	—	●	●	●	●
			C	With bowl guard	—	●	—	—	—	—
			6C	Nylon bowl with bowl guard	—	●	—	—	—	—
			+							
		h	Nil	With drain cock	●	●	●	●	●	●
		Filter regulator drain port Note 8)	J Note 9)	Drain guide 1/8	—	●	—	—	—	—
				Drain guide 1/4	—	—	●	●	●	●
			W Note 10)	Drain cock with barb fitting: For ø6 x ø4 nylon tube	—	—	●	●	●	●

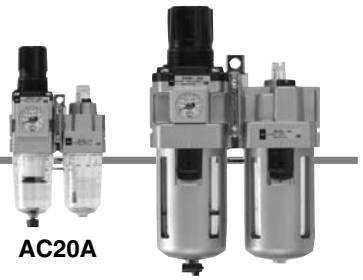

AC20A **AC40A**

			Symbol	Description	❶ Body size 10	20	30	40	50	60
❻ Semi-standard	i	Lubricator lubricant exhaust port	**Nil**	Without drain cock	●	●	●	●	●	●
			3	Lubricator with drain cock	●	●	●	●	●	●
			+							
	j	Exhaust mechanism	**Nil**	Relieving type	●	●	●	●	●	●
			N	Non-relieving type	●	●	●	●	●	●
			+							
	k	Flow direction	**Nil**	Flow direction: Left to right	●	●	●	●	●	●
			R	Flow direction: Right to left	●	●	●	●	●	●
			+							
	l	Pressure unit	**Nil**	Name plate and pressure gauge in imperial units: MPa	●	●	●	●	●	●
			Z Note 11)	Name plate, caution plate for bowl, and pressure gauge in imperial units: psi, °F	○ Note 13)	○ Note 13)	○ Note 13)	○ Note 13)	○ Note 13)	○ Note 13)
			ZA Note 12)	Digital pressure switch: With unit conversion function	—	△ Note 14)	△ Note 14)	△ Note 14)	△ Note 14)	△ Note 14)

Note 1) Drain guide is NPT1/8 (applicable to the AC20A) and NPT1/4 (applicable to the AC30A to AC60A). The auto drain port comes with ø3/8" one-touch fitting (applicable to the AC30A to AC60A).
Note 2) Drain guide is G1/8 (applicable to the AC20A) and G1/4 (applicable to the AC30A to AC60A).
Note 3) Option G, M are not assembled and supplied loose at the time of shipment.
Note 4) Not available with piping port size: 06.
Note 5) The bracket position varies depending on the pressure switch mounting.
Note 6) The only difference from the standard specifications is the adjusting spring for the regulator. It does not restrict the setting of 0.2 MPa or more. When the pressure gauge is attached, a 0.2 MPa pressure gauge will be fitted.
Note 7) Refer to Chemical Data on page 287 when selecting a case material.
Note 8) Float type auto drain: The combination of C and D is not possible.
Note 9) Without a valve function
Note 10) Metal bowl: The combination of 2 and 8 is not possible.
Note 11) For thread type: M5 and NPT. This product is for overseas use only according to the new Measurement Law. (The SI unit type is provided for use in Japan.) The digital pressure switch will be equipped with the unit conversion function, setting to psi initially.
MPa and psi are shown together on the pressure unit.
Note 12) For options: E1, E2, E3, E4. This product is for overseas use only according to the new Measurement Law. (The SI unit is provided for use in Japan.)
Note 13) ○: For thread type: M5 and NPT only
Note 14) △: Select with options: E1, E2, E3, E4.

Standard Specifications

Model		AC10A	AC20A	AC30A	AC40A	AC40A-06	AC50A	AC60A
Component	**Filter regulator**	**AW10**	**AW20**	**AW30**	**AW40**	**AW40-06**	**AW60**	**AW60**
	Lubricator	**AL10**	**AL20**	**AL30**	**AL40**	**AL40-06**	**AL50**	**AL60**
Port size		M5 x 0.8	1/8, 1/4	1/4, 3/8	1/4, 3/8, 1/2	3/4	3/4, 1	1
Pressure gauge port size Note 1)		1/16	1/8		1/4			
Fluid		Air						
Ambient and fluid temperature Note 2)		–5 to 60°C (with no freezing)						
Proof pressure		1.5 MPa						
Maximum operating pressure		1.0 MPa						
Set pressure range		0.05 to 0.7 MPa	0.05 to 0.85 MPa					
Relief pressure		Set pressure + 0.05 MPa Note 3) [at relief flow rate of 0.1 ℓ/min (ANR)]						
Nominal filtration rating		5 µm						
Recommended lubricant		Class 1 turbine oil (ISO VG32)						
Bowl material		Polycarbonate						
Bowl guard		—	Semi-standard	Standard				
Regulator construction		Relieving type						
Mass (kg)		0.20	0.59	0.75	1.41	1.46	3.33	3.40

Note 1) Pressure gauge connection threads are not available for F.R.L. unit with a square embedded type pressure gauge or with a digital pressure switch (AC20A to AC60A).
Note 2) –5 to 50°C for the products with the digital pressure switch
Note 3) Not applicable to the AC10A.

Dimensions

AC10A, AC20A

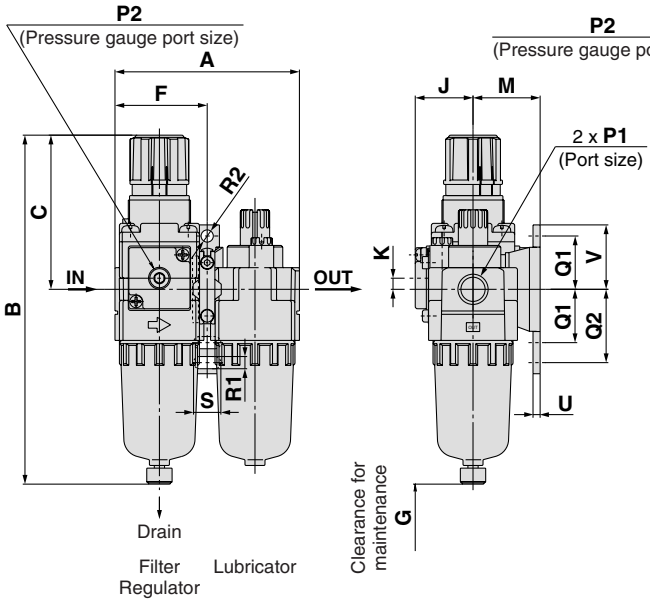

AC30A to AC60A

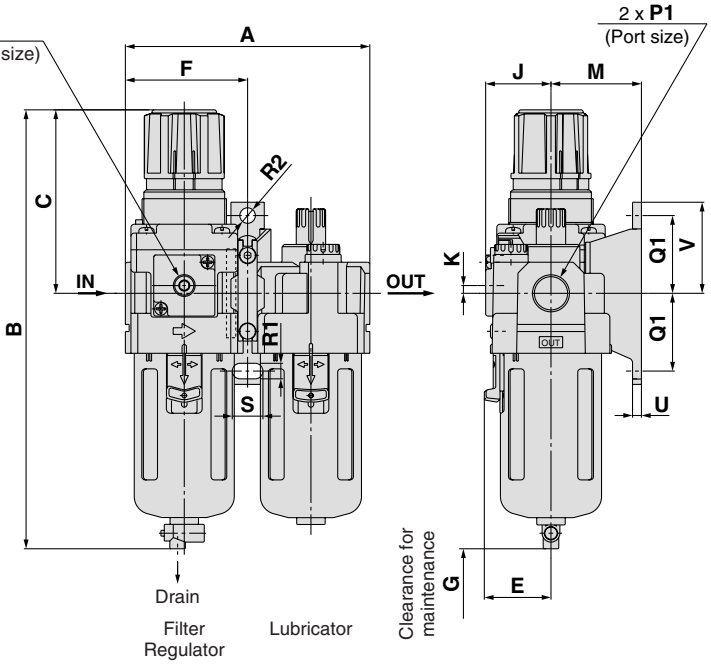

Applicable model	AC20A to AC60A		AC10A to AC60A	AC20A to AC60A
Option	Square embedded type pressure gauge	Digital pressure switch	Round type pressure gauge	Round type pressure gauge (with color zone)
Dimensions	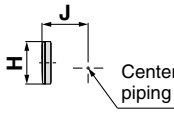	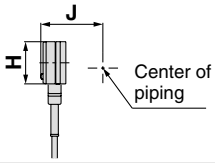	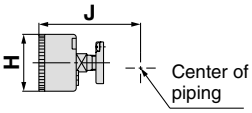	

Applicable model	AC10A, AC20A		AC20A	AC30A to AC60A				
Optional/Semi-standard specifications	With auto drain (N.C.)	Metal bowl	With drain guide	With auto drain (N.O./N.C.)	Metal bowl	Metal bowl with level gauge	With drain guide	Drain cock with barb fitting
Dimensions	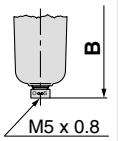	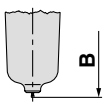	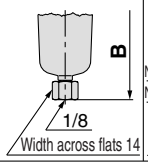	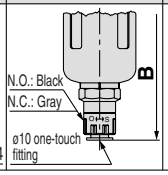	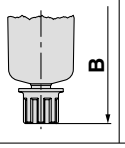	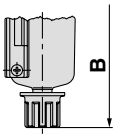	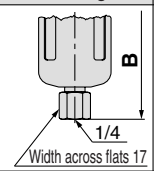	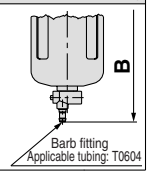

Model	Standard specifications										Optional specifications							
											Square type pressure gauge		Digital pressure switch		Round type pressure gauge		Round type pressure gauge (with color zone)	
	P1	P2	A	B Note)	C	E	F	G	J	K	H	J	H	J	H	J	H	J
AC10A	M5 x 0.8	1/16	56	108	48	—	28	35	13	0	—	—	—	—	ø26	26	—	—
AC20A	1/8, 1/4	1/8	83	160	73	—	41.5	60	26	5	□28	27	□27.8	37.5	ø37.5	63	ø37.5	63
AC30A	1/4, 3/8	1/8	110	201	86	30	55	80	29.5	3.5	□28	30.5	□27.8	41	ø37.5	66	ø37.5	66
AC40A	1/4, 3/8, 1/2	1/4	145	239	92	38	72.5	110	37.5	1.5	□28	38.5	□27.8	49	ø42.5	76	ø42.5	76
AC40A-06	3/4	1/4	155	242	93	38	77.5	110	37.5	1.2	□28	38.5	□27.8	49	ø42.5	76	ø42.5	76
AC50A	3/4, 1	1/4	191	409	175	—	98	110	43.5	3.2	□28	44.5	□27.8	61.5	ø42.5	84	ø42.5	84
AC60A	1	1/4	196	409	175	—	98	110	43.5	3.2	□28	44.5	□27.8	61.5	ø42.5	84	ø42.5	84

Model	Optional specifications									Semi-standard specifications			
	Bracket mount								With auto drain	With barb fitting	With drain guide	Metal bowl	Metal bowl with level gauge
	M	Q1	Q2	R1	R2	S	U	V	B	B	B	B	B
AC10A	25	20	27	4.5	ø4.5	7	2.8	24.5	125	—	—	107	—
AC20A	30	24	33	5.5	ø5.5	12	3.2	29	177	—	164	160	—
AC30A	41	35	—	7	ø7	14	4	41	242	209	208	214	234
AC40A	50	40	—	9	ø9	18	4	48	278	247	246	252	272
AC40A-06	50	40	—	9	ø9	18	4.6	48	282	251	249	255	275
AC50A	70	50	—	11	ø11	20	6.4	60	448	417	416	422	442
AC60A	70	50	—	11	ø11	20	6.4	60	448	417	416	422	442

Note) The total length of B dimension is the length when the filter regulator knob is unlocked.

Air Combination

Air Filter + Regulator

AC10B to AC60B

JIS Symbol

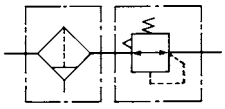

How to Order

AC ❶**30** **B** – ❷ ❸**03** ❹**DE** – ❺ – ❻

- Option/Semi-standard: Select one each for **a** to **j**.
- Option/Attachment/Semi-standard symbol: When more than one specification is required, indicate in alphanumeric order.

Example) AC30B-F03DE1-SV-16NR

			Symbol	Description	❶ Body size 10	20	25	30	40	50	55	60
❷	Thread type		Nil	Metric thread (M5)	●	—	—	—	—	—	—	—
				Rc	—	●	●	●	●	●	●	●
			N Note 1)	NPT	—	●	●	●	●	●	●	●
			F Note 2)	G	—	●	●	●	●	●	●	●
			+									
❸	Port size		M5	M5	●	—	—	—	—	—	—	—
			01	1/8	—	●	—	—	—	—	—	—
			02	1/4	—	●	●	●	●	—	—	—
			03	3/8	—	—	●	●	●	—	—	—
			04	1/2	—	—	—	—	●	—	—	—
			06	3/4	—	—	—	—	●	●	—	—
			10	1	—	—	—	—	—	●	●	●
			+									
❹	Option Note 3)	a	Float type auto drain	Nil	Without auto drain	●	●	●	●	●	●	●	●
				C	Float type auto drain (N.C.)	●	●	●	●	●	●	●	●
				D	Float type auto drain (N.O.)	—	—	●	●	●	●	●	●
			+										
		b	Pressure gauge	Nil	Without pressure gauge	●	●	●	●	●	●	●	●
				E	Square embedded type pressure gauge (with limit indicator)	—	●	●	●	●	●	●	●
				G	Round type pressure gauge (without limit indicator)	●	—	—	—	—	—	—	—
					Round type pressure gauge (with limit indicator)	—	●	●	●	●	●	●	●
				M	Round type pressure gauge (with color zone)	—	●	●	●	●	●	●	●
			Digital pressure switch	E1	Output: NPN output / Electrical entry: Wiring bottom entry	—	●	●	●	●	●	●	●
				E2	Output: NPN output / Electrical entry: Wiring top entry	—	●	●	●	●	●	●	●
				E3	Output: PNP output / Electrical entry: Wiring bottom entry	—	●	●	●	●	●	●	●
				E4	Output: PNP output / Electrical entry: Wiring top entry	—	●	●	●	●	●	●	●
			+										
❺	Attachment	c	Pressure switch	Nil	Without attachment	●	●	●	●	●	●	●	●
				S Note 4)	Mounting position: AF+**S**+AR	—	●	●	●	●	●	●	●
			T-interface	T Note 4)	Mounting position: AF+**T**+AR	●	●	●	●	●	●	●	●
			+										
		d	3-port valve for residual pressure release	Nil	Without attachment	●	●	●	●	●	●	●	●
				V	Mounting position: AF+AR+**V**	—	●	●	●	●	●	—	—
				V1 Note 5)	Mounting position: **V**+AF+AR□K	—	●	●	●	●	●	—	—
			+										
❻	Semi-standard	e	Set pressure	Nil	0.05 to 0.85 MPa setting	●	●	●	●	●	●	●	●
				1 Note 6)	0.02 to 0.2 MPa setting	●	●	●	●	●	●	●	●
			+										
		f	Bowl Note 7)	Nil	Polycarbonate bowl	●	●	●	●	●	●	●	●
				2	Metal bowl	●	●	●	●	●	●	●	●
				6	Nylon bowl	●	●	●	●	●	●	●	●
				8	Metal bowl with level gauge	—	—	●	●	●	●	●	●
				C	With bowl guard	—	●	—	—	—	—	—	—
				6C	Nylon bowl with bowl guard	—	●	—	—	—	—	—	—
			+										
		g	Filter drain port Note 8)	Nil	With drain cock	●	●	●	●	●	●	●	●
				J Note 9)	Drain guide 1/8	—	●	—	—	—	—	—	—
					Drain guide 1/4	—	—	●	●	●	●	●	●
				W Note 10)	Drain cock with barb fitting: For ø6 x ø4 nylon tube	—	—	●	●	●	●	●	●



AC20B



AC40B

		Symbol	Description	❶ Body size 10	20	25	30	40	50	55	60
❻ Semi-standard	h Exhaust mechanism	Nil	Relieving type	●	●	●	●	●	●	●	●
		N	Non-relieving type	●	●	●	●	●	●	●	●
		+									
	i Flow direction	Nil	Flow direction: Left to right	●	●	●	●	●	●	●	●
		R	Flow direction: Right to left	●	●	●	●	●	●	●	●
		+									
	j Pressure unit	Nil	Name plate and pressure gauge in imperial units: MPa	●	●	●	●	●	●	●	●
		Z Note 11)	Name plate, caution plate for bowl, and pressure gauge in imperial units: psi, °F	○ Note 13)	○ Note 13)	○ Note 13)	○ Note 13)	○ Note 13)	○ Note 13)	○ Note 13)	○ Note 13)
		ZA Note 12)	Digital pressure switch: With unit conversion function	—	△ Note 14)	△ Note 14)	△ Note 14)	△ Note 14)	△ Note 14)	△ Note 14)	△ Note 14)

Note 1) Drain guide is NPT1/8 (applicable to the AC20B) and NPT1/4 (applicable to the AC25B to AC60B). The auto drain port comes with ø3/8" one-touch fitting (applicable to the AC25B to AC60B).
Note 2) Drain guide is G1/8 (applicable to the AC20B) and G1/4 (applicable to the AC25B to AC60B).
Note 3) Option G, M are not assembled and supplied loose at the time of shipment.
Note 4) The bracket position varies depending on the T-interface or pressure switch mounting.
Note 5) The regulator is equipped with a backflow function in this configuration. Additionally, for safety purposes, please check that the pressure in the outlet side is turned to the atmospheric pressure once the pressure in the outlet side is exhausted, by using a pressure gauge, etc.
Note 6) The only difference from the standard specifications is the adjusting spring for the regulator. It does not restrict the setting of 0.2 MPa or more. When the pressure gauge is attached, a 0.2 MPa pressure gauge will be fitted.
Note 7) Refer to Chemical Data on page 287 when selecting a case material.
Note 8) Float type auto drain: The combination of C and D is not possible.
Note 9) Without a valve function
Note 10) Metal bowl: The combination of 2 and 8 is not possible.
Note 11) For thread type: M5 and NPT. This product is for overseas use only according to the new Measurement Law. (The SI unit type is provided for use in Japan.) The digital pressure switch will be equipped with the unit conversion function, setting to psi initially.
MPa and psi are shown together on the pressure unit.
Note 12) For options: E1, E2, E3, E4. This product is for overseas use only according to the new Measurement Law. (The SI unit is provided for use in Japan.)
Note 13) ○: For thread type: M5 and NPT only
Note 14) △: Select with options: E1, E2, E3, E4.

Standard Specifications

Model		AC10B	AC20B	AC25B	AC30B	AC40B	AC40B-06	AC50B	AC55B	AC60B
Component	**Air filter**	**AF10**	**AF20**	**AF30**	**AF30**	**AF40**	**AF40-06**	**AF50**	**AF60**	**AF60**
	Regulator	**AR10**	**AR20**	**AR25**	**AR30**	**AR40**	**AR40-06**	**AR50**	**AR50**	**AR60**
Port size		M5 x 0.8	1/8, 1/4	1/4, 3/8	1/4, 3/8	1/4, 3/8, 1/2	3/4	3/4, 1	1	1
Pressure gauge port size Note 1)		1/16	1/8			1/4				
Fluid		Air								
Ambient and fluid temperature Note 2)		–5 to 60°C (with no freezing)								
Proof pressure		1.5 MPa								
Maximum operating pressure		1.0 MPa								
Set pressure range		0.05 to 0.7 MPa	0.05 to 0.85 MPa							
Relief pressure		Set pressure + 0.05 MPa Note 3) [at relief flow rate of 0.1 ℓ/min (ANR)]								
Nominal filtration rating		5 μm								
Bowl material		Polycarbonate								
Bowl guard		—	Semi-standard	Standard						
Regulator construction		Relieving type								
Mass (kg)		0.16	0.51	0.55	0.63	1.12	1.16	2.44	2.45	2.54

Note 1) Pressure gauge connection threads are not available for F.R.L. unit with a square embedded type pressure gauge or with a digital pressure switch (AC10B to AC60B).
Note 2) –5 to 50°C for the products with the digital pressure switch
Note 3) Not applicable to the AC10B.

Dimensions

AC10B, AC20B

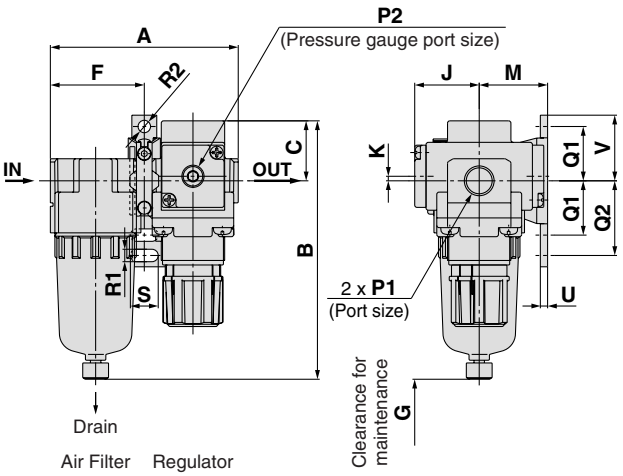

AC25B to AC60B

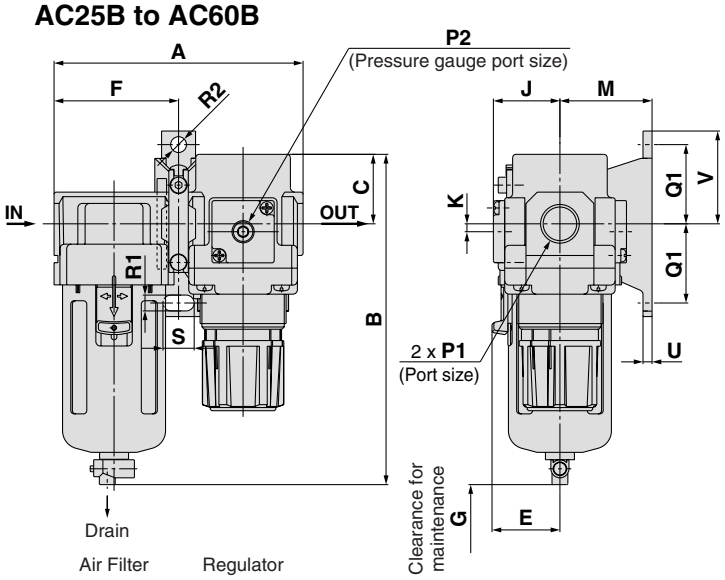

Applicable model	AC20B to AC60B		AC10B to AC60B	AC20B to AC60B
Option	Square embedded type pressure gauge	Digital pressure switch	Round type pressure gauge	Round type pressure gauge (with color zone)
Dimensions	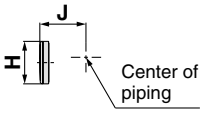	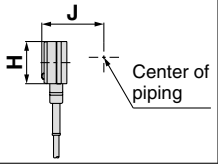	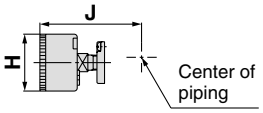	

Applicable model	AC10B, AC20B		AC20B	AC25B to AC60B				
Optional/Semi-standard specifications	With auto drain (N.C.)	Metal bowl	With drain guide	With auto drain (N.O./N.C.)	Metal bowl	Metal bowl with level gauge	With drain guide	Drain cock with barb fitting
Dimensions	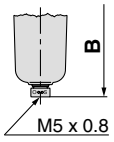	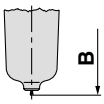	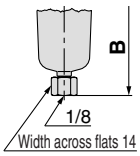	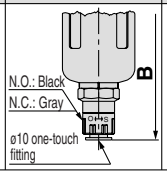	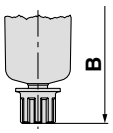	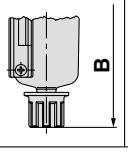	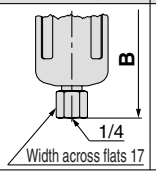	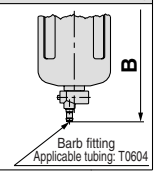

Model	Standard specifications										Optional specifications							
											Square type pressure gauge		Digital pressure switch		Round type pressure gauge		Round type pressure gauge (with color zone)	
	P1	P2	A	B	C	E	F	G	J	K	H	J	H	J	H	J	H	J
AC10B	M5 x 0.8	1/16	56	71	11	—	28	25	13	0	—	—	—	—	ø26	26	—	—
AC20B	1/8, 1/4	1/8	83	114	26.5	—	41.5	40	28.5	2 Note)	□28	29.5	□27.8	40	ø37.5	65	ø37.5	65
AC25B	1/4, 3/8	1/8	110	143	28	30	55	50	27.5	0	□28	28.5	□27.8	39	ø37.5	64	ø37.5	64
AC30B	1/4, 3/8	1/8	110	146	31	30	55	50	29.5	3.5	□28	30.5	□27.8	41	ø37.5	66	ø37.5	66
AC40B	1/4, 3/8, 1/2	1/4	145	183	36	38	72.5	75	34	3.5	□28	35	□27.8	45	ø42.5	74	ø42.5	74
AC40B-06	3/4	1/4	155	185	36	38	77.5	75	34	3	□28	35	□27.8	45	ø42.5	74	ø42.5	74
AC50B	3/4, 1	1/4	186	263	43	45	93	20	43.5	3.3	□28	44.5	□27.8	55	ø42.5	84	ø42.5	84
AC55B	1	1/4	191	277	43	47.5	98	20	43.5	3.3	□28	44.5	□27.8	55	ø42.5	84	ø42.5	84
AC60B	1	1/4	196	280	46	47.5	98	20	43.5	3.3	□28	44.5	□27.8	55	ø42.5	84	ø42.5	84

Model	Optional specifications									Semi-standard specifications			
	Bracket mount								With auto drain	With barb fitting	With drain guide	Metal bowl	Metal bowl with level gauge
	M	Q1	Q2	R1	R2	S	U	V	B	B	B	B	B
AC10B	25	20	27	4.5	ø4.5	7	2.8	24.5	89	—	—	70	—
AC20B	30	24	33	5.5	ø5.5	12	3.2	29	132	—	118	114	—
AC25B	41	35	—	7	ø7	14	4	41	184	151	150	156	176
AC30B	41	35	—	7	ø7	14	4	41	187	154	153	159	179
AC40B	50	40	—	9	ø9	18	4	48	222	191	190	196	216
AC40B-06	50	40	—	9	ø9	18	4.6	48	224	193	192	198	218
AC50B	70	50	—	11	ø11	20	6.4	60	303	271	270	277	297
AC55B	70	50	—	11	ø11	20	6.4	60	316	285	284	290	310
AC60B	70	50	—	11	ø11	20	6.4	60	319	288	287	293	313

Note) For the AC20B only, the position of the pressure gauge is above the center of the piping.

Air Combination

Air Filter + Mist Separator + Regulator

AC20C to AC40C

JIS Symbol

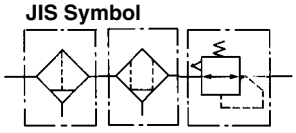

Air Filter Mist Separator Regulator

How to Order

AC ❶**30** **C** – ❷ ❸**03** ❹**DE** – ❺ – ❻

- Option/Semi-standard: Select one each for **a** to **j**.
- Option/Attachment/Semi-standard symbol: When more than one specification is required, indicate in alphanumeric order.

Example) AC30C-F03DE1-SV-16NR

			Symbol	Description	❶ Body size 20	25	30	40
❷	Thread type		**Nil**	Rc	●	●	●	●
			N Note 1)	NPT	●	●	●	●
			F Note 2)	G	●	●	●	●
			+					
❸	Port size		**01**	1/8	●	—	—	—
			02	1/4	●	●	●	●
			03	3/8	—	●	●	●
			04	1/2	—	—	—	●
			06	3/4	—	—	—	●
			+					
❹ Option Note 3)		**a** Float type auto drain	**Nil**	Without auto drain	●	●	●	●
			C	Float type auto drain (N.C.)	●	●	●	●
			D	Float type auto drain (N.O.)	—	●	●	●
			+					
		b Pressure gauge	**Nil**	Without pressure gauge	●	●	●	●
			E	Square embedded type pressure gauge (with limit indicator)	●	●	●	●
			G	Round type pressure gauge (with limit indicator)	●	●	●	●
			M	Round type pressure gauge (with color zone)	●	●	●	●
		b Digital pressure switch	**E1**	Output: NPN output / Electrical entry: Wiring bottom entry	●	●	●	●
			E2	Output: NPN output / Electrical entry: Wiring top entry	●	●	●	●
			E3	Output: PNP output / Electrical entry: Wiring bottom entry	●	●	●	●
			E4	Output: PNP output / Electrical entry: Wiring top entry	●	●	●	●
			+					
❺ Attachment		**c** Pressure switch	**Nil**	Without attachment	●	●	●	●
			S Note 4)	Mounting position: AF+AFM+**S**+AR	●	●	●	●
		c T-interface	**T** Note 4)	Mounting position: AF+AFM+**T**+AR	●	●	●	●
			+					
		d 3-port valve for residual pressure release	**Nil**	Without attachment	●	●	●	●
			V	Mounting position: AF+AFM+AR+**V**	●	●	●	●
			V1 Note 5)	Mounting position: **V**+AF+AFM+AR□K	●	●	●	●
			+					
❻ Semi-standard		**e** Set pressure	**Nil**	0.05 to 0.85 MPa setting	●	●	●	●
			1 Note 6)	0.02 to 0.2 MPa setting	●	●	●	●
			+					
		f Bowl Note 7)	**Nil**	Polycarbonate bowl	●	●	●	●
			2	Metal bowl	●	●	●	●
			6	Nylon bowl	●	●	●	●
			8	Metal bowl with level gauge	—	●	●	●
			C	With bowl guard	●	—	—	—
			6C	Nylon bowl with bowl guard	●	—	—	—
			+					
		g Filter Mist separator drain port Note 8)	**Nil**	With drain cock	●	●	●	●
			J Note 9)	Drain guide 1/8	●	—	—	—
				Drain guide 1/4	—	●	●	●
			W Note 10)	Drain cock with barb fitting: For ø6 x ø4 nylon tube	—	●	●	●
			+					
		h Exhaust mechanism	**Nil**	Relieving type	●	●	●	●
			N	Non-relieving type	●	●	●	●



AC20C



AC40C

		Symbol	Description	❶ Body size 20	25	30	40
❻ Semi-standard	i Flow direction	Nil	Flow direction: Left to right	●	●	●	●
		R	Flow direction: Right to left	●	●	●	●
	+						
	j Pressure unit	Nil	Name plate and pressure gauge in imperial units: MPa	●	●	●	●
		Z Note 11)	Name plate, caution plate for bowl, and pressure gauge in imperial units: psi, °F	○ Note 13)	○ Note 13)	○ Note 13)	○ Note 13)
		ZA Note 12)	Digital pressure switch: With unit conversion function	△ Note 14)	△ Note 14)	△ Note 14)	△ Note 14)

Note 1) Drain guide is NPT1/8 (applicable to the AC20C) and NPT1/4 (applicable to the AC30C to AC40C). The auto drain port comes with ø3/8" one-touch fitting (applicable to the AC30C to AC40C).
Note 2) Drain guide is G1/8 (applicable to the AC20C) and G1/4 (applicable to the AC30C to AC40C).
Note 3) Option G, M are not assembled and supplied loose at the time of shipment.
Note 4) The bracket position varies depending on the T-interface or pressure switch mounting.
Note 5) The regulator is equipped with a backflow function in this configuration. Additionally, for safety purposes, please check that the pressure in the outlet side is turned to the atmospheric pressure once the pressure in the outlet side is exhausted, by using a pressure gauge, etc.
Note 6) The only difference from the standard specifications is the adjusting spring for the regulator. It does not restrict the setting of 0.2 MPa or more. When the pressure gauge is attached, a 0.2 MPa pressure gauge will be fitted.
Note 7) Refer to Chemical Data on page 287 when selecting a case material.
Note 8) Float type auto drain: The combination of C and D is not possible.
Note 9) Without a valve function
Note 10) Metal bowl: The combination of 2 and 8 is not possible.
Note 11) For thread type: NPT. This product is for overseas use only according to the new Measurement Law. (The SI unit type is provided for use in Japan.) The digital pressure switch will be equipped with the unit conversion function, setting to psi initially.
MPa and psi are shown together on the pressure unit.
Note 12) For options: E1, E2, E3, E4. This product is for overseas use only according to the new Measurement Law. (The SI unit is provided for use in Japan.)
Note 13) ○: For thread type: NPT only
Note 14) △: Select with options: E1, E2, E3, E4.

Standard Specifications

Model		AC20C	AC25C	AC30C	AC40C	AC40C-06
Component	Air filter	AF20	AF30	AF30	AF40	AF40-06
	Mist separator	AFM20	AFM30	AFM30	AFM40	AFM40-06
	Regulator	AR20	AR25	AR30	AR40	AR40-06
Port size		1/8, 1/4	1/4, 3/8	1/4, 3/8	1/4, 3/8, 1/2	3/4
Pressure gauge port size Note 1)		1/8			1/4	
Fluid		Air				
Ambient and fluid temperature Note 2)		–5 to 60°C (with no freezing)				
Proof pressure		1.5 MPa				
Maximum operating pressure		1.0 MPa				
Minimum operating pressure		0.05 MPa				
Set pressure range		0.05 to 0.85 MPa				
Relief pressure		Set pressure + 0.05 MPa [at relief flow rate of 0.1 ℓ/min (ANR)]				
Nominal filtration rating		AF: 5 μm, AFM: 0.3 μm (99.9% filtered particle size)				
Outlet side oil mist concentration		Max. 1.0 mg/m³ (ANR) (≈ 0.8 ppm) Note 4) Note 5)				
Rated flow (ℓ/min (ANR)) Note 3)		200	450	450	1100	1100
Bowl material		Polycarbonate				
Bowl guard		Semi-standard	Standard			
Regulator construction		Relieving type				
Mass (kg)		0.74	0.88	0.95	1.76	1.83

Note 1) Pressure gauge connection threads are not available for F.R.L. unit with a square embedded type pressure gauge or with a digital pressure switch (AC20C to AC40C).
Note 2) –5 to 50°C for the products with the digital pressure switch.
Note 3) Conditions: Mist separator inlet pressure: 0.7 MPa; The rated flow varies depending on the inlet pressure. Keep the air flow within the rated flow to prevent an outflow of lubricant to the outlet side.
Note 4) When the compressor oil mist discharge concentration is 30 mg/m³ (ANR).
Note 5) Bowl O-ring and other O-rings are slightly lubricated.

Dimensions

AC20C

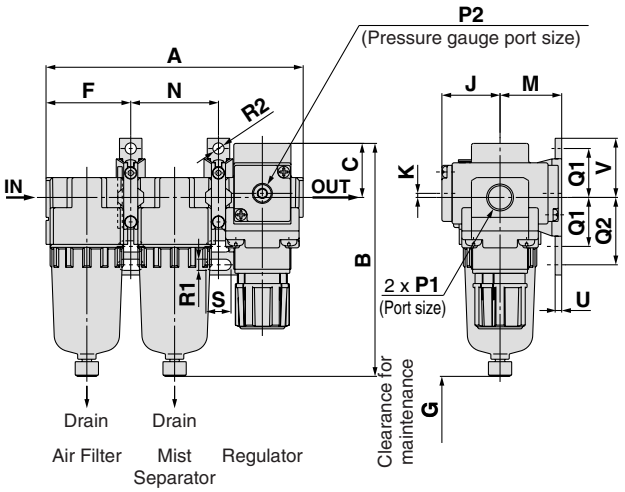

AC25C to AC40C-06

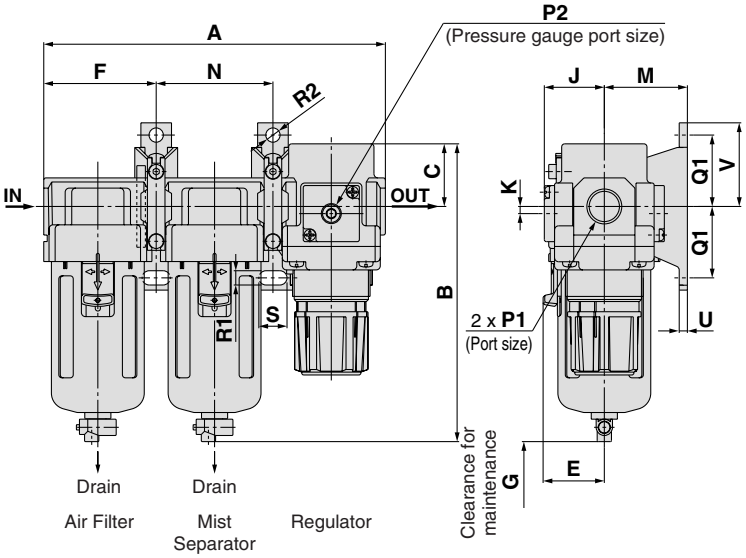

Applicable model	AC20C to AC40C-06			
Option	Square embedded type pressure gauge	Digital pressure switch	Round type pressure gauge	Round type pressure gauge (with color zone)
Dimensions	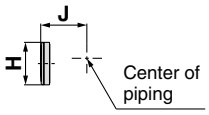	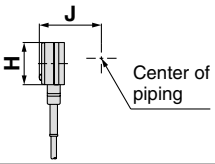	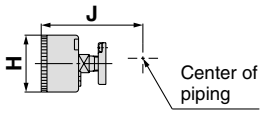	

Applicable model	AC20C			AC25C to AC40C-06				
Optional/Semi-standard specifications	With auto drain (N.C.)	Metal bowl	With drain guide	With auto drain (N.O./N.C.)	Metal bowl	Metal bowl with level gauge	With drain guide	Drain cock with barb fitting
Dimensions	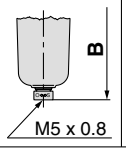	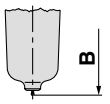	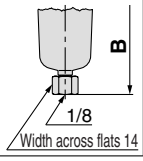	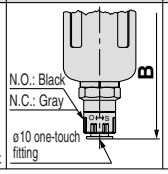	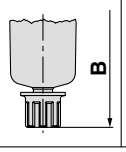	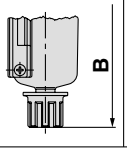	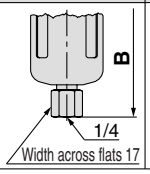	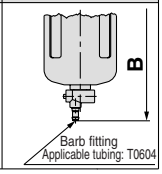

Model	Standard specifications										Optional specifications							
											Square type pressure gauge		Digital pressure switch		Round type pressure gauge		Round type pressure gauge (with color zone)	
	P1	P2	A	B	C	E	F	G	J	K	H	J	H	J	H	J	H	J
AC20C	1/8, 1/4	1/8	126	114	26.5	—	41.5	45	28.5	2 Note)	□28	29.5	□27.8	40	ø37.5	65	ø37.5	65
AC25C	1/4, 3/8	1/8	167	143	28	30	55	50	27.5	0	□28	28.5	□27.8	39	ø37.5	64	ø37.5	64
AC30C	1/4, 3/8	1/8	167	146	31	30	55	50	29.5	3.5	□28	30.5	□27.8	41	ø37.5	66	ø37.5	66
AC40C	1/4, 3/8, 1/2	1/4	220	183	36	38	72.5	75	34	3.5	□28	35	□27.8	45	ø42.5	74	ø42.5	74
AC40C-06	3/4	1/4	235	185	36	38	77.5	75	34	3	□28	35	□27.8	45	ø42.5	74	ø42.5	74

Model	Optional specifications									Semi-standard specifications			
	Bracket mount									With auto drain	With barb fitting	With drain guide	Metal bowl	Metal bowl with level gauge
	M	N	Q1	Q2	R1	R2	S	U	V	B	B	B	B	B
AC20C	30	43	24	33	5.5	ø5.5	12	3.2	29	132	—	118	114	—
AC25C	41	57	35	—	7	ø7	14	4	41	184	151	150	156	176
AC30C	41	57	35	—	7	ø7	14	4	41	187	154	153	159	179
AC40C	50	75	40	—	9	ø9	18	4	48	222	191	190	196	216
AC40C-06	50	80	40	—	9	ø9	18	4.6	48	224	193	192	198	218

Note) For the AC20C only, the position of the pressure gauge is above the center of the piping.

Air Combination

Filter Regulator + Mist Separator

AC20D to AC40D

JIS Symbol

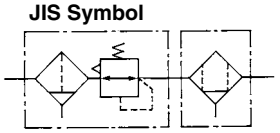

Filter Regulator Mist Separator

How to Order

AC ❶30 D − ❷ ❸03 ❹DE − ❺ − ❻

- Option/Semi-standard: Select one each for **a** to **j**.
- Option/Attachment/Semi-standard symbol: When more than one specification is required, indicate in alphanumeric order.

Example) AC30D-F03DE1-SV-16NR

			Symbol	Description	❶ Body size 20	30	40
❷	Thread type		**Nil**	Rc	●	●	●
			N Note 1)	NPT	●	●	●
			F Note 2)	G	●	●	●
			+				
❸	Port size		**01**	1/8	●	—	—
			02	1/4	●	●	●
			03	3/8	—	●	●
			04	1/2	—	—	●
			06	3/4	—	—	●
			+				
❹	Option Note 3)	**a** Float type auto drain	**Nil**	Without auto drain	●	●	●
			C	Float type auto drain (N.C.)	●	●	●
			D	Float type auto drain (N.O.)	—	●	●
			+				
		b Pressure gauge	**Nil**	Without pressure gauge	●	●	●
			E	Square embedded type pressure gauge (with limit indicator)	●	●	●
			G	Round type pressure gauge (with limit indicator)	●	●	●
			M	Round type pressure gauge (with color zone)	●	●	●
		b Digital pressure switch	**E1**	Output: NPN output / Electrical entry: Wiring bottom entry	●	●	●
			E2	Output: NPN output / Electrical entry: Wiring top entry	●	●	●
			E3	Output: PNP output / Electrical entry: Wiring bottom entry	●	●	●
			E4	Output: PNP output / Electrical entry: Wiring top entry	●	●	●
			+				
❺	Attachment	**c** Pressure switch	**Nil**	Without attachment	●	●	●
			S Note 4)	Mounting position: AW+**S**+AFM	●	●	●
			+				
		d 3-port valve for residual pressure release	**Nil**	Without attachment	●	●	●
			V	Mounting position: AW+AFM+**V**	●	●	●
			V1 Note 5)	Mounting position: **V**+AW□K+AFM	●	●	●
			+				
❻	Semi-standard	**e** Set pressure	**Nil**	0.05 to 0.85 MPa setting	●	●	●
			1 Note 6)	0.02 to 0.2 MPa setting	●	●	●
			+				
		f Bowl Note 7)	**Nil**	Polycarbonate bowl	●	●	●
			2	Metal bowl	●	●	●
			6	Nylon bowl	●	●	●
			8	Metal bowl with level gauge	—	●	●
			C	With bowl guard	●	—	—
			6C	Nylon bowl with bowl guard	●	—	—
			+				
		g Filter regulator Mist separator drain port Note 8)	**Nil**	With drain cock	●	●	●
			J Note 9)	Drain guide 1/8	●	—	—
				Drain guide 1/4	—	●	●
			W Note 10)	Drain cock with barb fitting: For ø6 x ø4 nylon tube	—	●	●
			+				
		h Exhaust mechanism	**Nil**	Relieving type	●	●	●
			N	Non-relieving type	●	●	●
			+				
		i Flow direction	**Nil**	Flow direction: Left to right	●	●	●
			R	Flow direction: Right to left	●	●	●

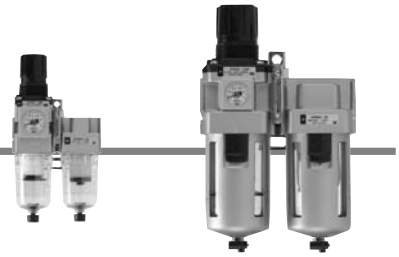

AC20D **AC40D**

	Symbol	Description	❶ Body size 20	30	40
6 Semi-standard, j Pressure unit	**Nil**	Name plate and pressure gauge in imperial units: MPa	●	●	●
	Z Note 11)	Name plate, caution plate for bowl, and pressure gauge in imperial units: psi, °F	○ Note 13)	○ Note 13)	○ Note 13)
	ZA Note 12)	Digital pressure switch: With unit conversion function	△ Note 14)	△ Note 14)	△ Note 14)

Note 1) Drain guide is NPT1/8 (applicable to the AC20D) and NPT1/4 (applicable to the AC30D to AC40D). The auto drain port comes with ø3/8" one-touch fitting (applicable to the AC30D to AC40D).
Note 2) Drain guide is G1/8 (applicable to the AC20D) and G1/4 (applicable to the AC30D to AC40D).
Note 3) Option G, M are not assembled and supplied loose at the time of shipment.
Note 4) The bracket position varies depending on the pressure switch mounting.
Note 5) The regulator is equipped with a backflow function in this configuration. Additionally, for safety purposes, please check that the pressure in the outlet side is turned to the atmospheric pressure once the pressure in the outlet side is exhausted, by using a pressure gauge, etc.
Note 6) The only difference from the standard specifications is the adjusting spring for the regulator. It does not restrict the setting of 0.2 MPa or more. When the pressure gauge is attached, a 0.2 MPa pressure gauge will be fitted.
Note 7) Refer to Chemical Data on page 287 when selecting a case material.
Note 8) Float type auto drain: The combination of C and D is not possible.
Note 9) Without a valve function
Note 10) Metal bowl: The combination of 2 and 8 is not possible.
Note 11) For thread type: NPT. This product is for overseas use only according to the new Measurement Law. (The SI unit type is provided for use in Japan.) The digital pressure switch will be equipped with the unit conversion function, setting to psi initially.
MPa and psi are shown together on the pressure unit.
Note 12) For options: E1, E2, E3, E4. This product is for overseas use only according to the new Measurement Law. (The SI unit is provided for use in Japan.)
Note 13) ○: For thread type: NPT only
Note 14) △: Select with options: E1, E2, E3, E4.

Standard Specifications

Model		AC20D	AC30D	AC40D	AC40D-06
Component	**Filter regulator**	**AW20**	**AW30**	**AW40**	**AW40-06**
	Mist separator	**AFM20**	**AFM30**	**AFM40**	**AFM40-06**
Port size		1/8, 1/4	1/4, 3/8	1/4, 3/8, 1/2	3/4
Pressure gauge port size Note 1)		1/8		1/4	
Fluid		Air			
Ambient and fluid temperature Note 2)		–5 to 60°C (with no freezing)			
Proof pressure		1.5 MPa			
Maximum operating pressure		1.0 MPa			
Minimum operating pressure		0.05 MPa			
Set pressure range		0.05 to 0.85 MPa			
Relief pressure		Set pressure + 0.05 MPa [at relief flow rate of 0.1 ℓ/min (ANR)]			
Nominal filtration rating		AF: 5 μm, AFM: 0.3 μm (99.9% filtered particle size)			
Rated flow (ℓ/min (ANR)) Note 3)		150	330	800	800
Outlet side oil mist concentration		Max. 1.0 mg/m³ (ANR) (≈ 0.8 ppm) Note 4) Note 5)			
Bowl material		Polycarbonate			
Bowl guard		Semi-standard	Standard		
Regulator construction		Relieving type			
Mass (kg)		0.57	0.74	1.38	1.43

Note 1) Pressure gauge connection threads are not available for F.R.L. unit with a square embedded type pressure gauge or with a digital pressure switch (AC20D to AC40D).
Note 2) –5 to 50°C for the products with the digital pressure switch
Note 3) Conditions: Mist separator inlet pressure: 0.5 MPa; The rated flow varies depending on the inlet pressure. Keep the air flow within the rated flow to prevent an outflow of lubricant to the outlet side.
Note 4) When the compressor oil mist discharge concentration is 30 mg/m³ (ANR).
Note 5) Bowl O-ring and other O-rings are slightly lubricated.

Dimensions

AC20D

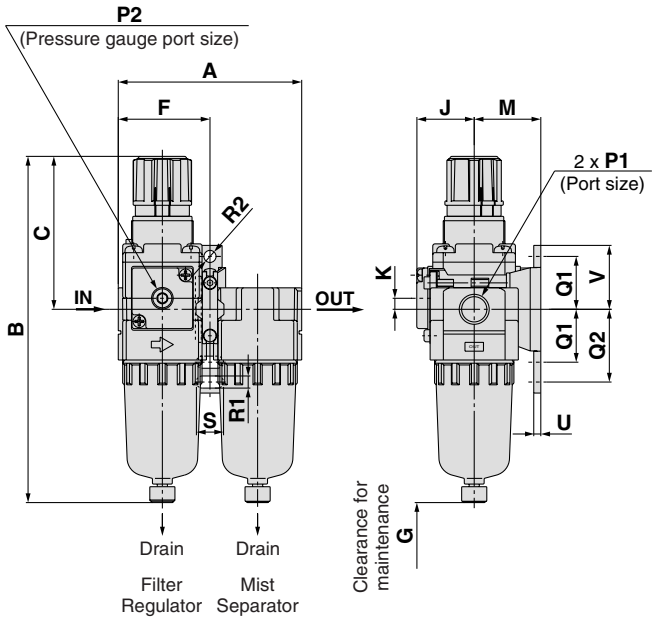

AC30D to AC40D-06

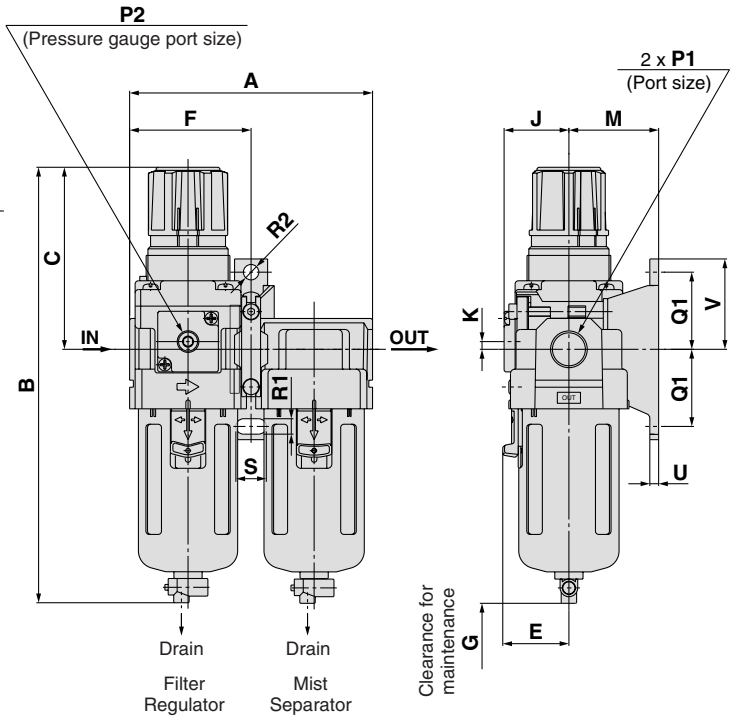

Applicable model	AC20D to AC40D-06			
Option	Square embedded type pressure gauge	Digital pressure switch	Round type pressure gauge	Round type pressure gauge (with color zone)
Dimensions	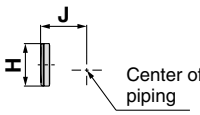	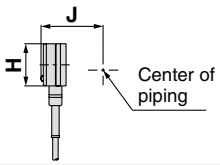	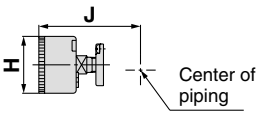	

Applicable model	AC20D			AC30D to AC40D-06				
Optional/Semi-standard specifications	With auto drain (N.C.)	Metal bowl	With drain guide	With auto drain (N.O./N.C.)	Metal bowl	Metal bowl with level gauge	With drain guide	Drain cock with barb fitting
Dimensions	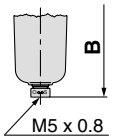	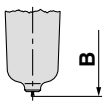	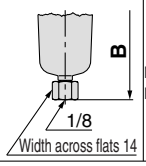	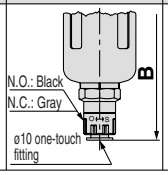	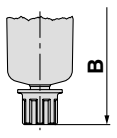	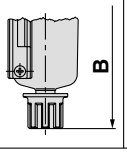	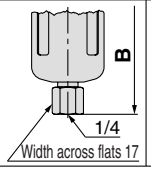	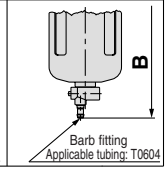

Model	Standard specifications										Optional specifications							
											Square type pressure gauge		Digital pressure switch		Round type pressure gauge		Round type pressure gauge (with color zone)	
	P1	P2	A	B Note)	C	E	F	G	J	K	H	J	H	J	H	J	H	J
AC20D	1/8, 1/4	1/8	83	160	73	—	41.5	45	26	5	□28	27	□27.8	37.5	ø37.5	63	ø37.5	63
AC30D	1/4, 3/8	1/8	110	201	86	30	55	55	29.5	3.5	□28	30.5	□27.8	41	ø37.5	66	ø37.5	66
AC40D	1/4, 3/8, 1/2	1/4	145	239	92	38	72.5	80	37.5	1.5	□28	38.5	□27.8	49	ø42.5	76	ø42.5	76
AC40D-06	3/4	1/4	155	242	93	38	77.5	80	37.5	1.2	□28	38.5	□27.8	49	ø42.5	76	ø42.5	76

Model	Optional specifications									Semi-standard specifications			
	Bracket mount								With auto drain	With barb fitting	With drain guide	Metal bowl	Metal bowl with level gauge
	M	Q1	Q2	R1	R2	S	U	V	B	B	B	B	B
AC20D	30	24	33	5.5	ø5.5	12	3.2	29	177	—	164	160	—
AC30D	41	35	—	7	ø7	14	4	41	242	209	208	214	234
AC40D	50	40	—	9	ø9	18	4	48	278	247	246	252	272
AC40D-06	50	40	—	9	ø9	18	4.6	48	282	251	249	255	275

Note) The total length of B dimension is the length when the filter regulator knob is unlocked.

Air Combination
Series AC
Options/Attachments

Options/Attachments Part No.

Section	Type		Model	Part no.								
				For AC10	For AC20	For AC25	For AC30	For AC40	For AC40-06	For AC50	For AC55	For AC60
				For AC10A	For AC20A	—	For AC30A	For AC40A	For AC40A-06	For AC50A	—	For AC60A
				For AC10B	For AC20B	For AC25B	For AC30B	For AC40B	For AC40B-06	For AC50B	For AC55B	For AC60B
				—	For AC20C	For AC25C	For AC30C	For AC40C	For AC40C-06	—	—	—
				—	For AC20D	—	For AC30D	For AC40D	For AC40D-06	—	—	—
Option	Pressure gauge Note 1)	Round type	Standard	G27-10-R1	G36-10-□01			G46-10-□02				
			0.02 to 0.2 MPa setting	G27-10-R1 Note 3)	G36-2-□01			G46-2-□02				
		Round type (with color zone)	Standard	—	G36-10-□01-L			G46-10-□02-L				
			0.02 to 0.2 MPa setting	—	G36-2-□01-L			G46-2-□02-L				
		Square Note 2) embedded type	Standard	—	GC3-10AS [GC3P-010AS (Pressure gauge cover only)]							
			0.02 to 0.2 MPa setting	—	GC3-2AS [GC3P-010AS (Pressure gauge cover only)]							
	Digital pressure switch		NPN output/Wiring bottom entry	—	ISE35-N-25-MLA [ISE35-N-25-M (Switch body only)] Note 4)							
			NPN output/Wiring top entry		ISE35-R-25-MLA [ISE35-R-25-M (Switch body only)] Note 4)							
			PNP output/Wiring bottom entry		ISE35-N-65-MLA [ISE35-N-65-M (Switch body only)] Note 4)							
			PNP output/Wiring top entry		ISE35-R-65-MLA [ISE35-R-65-M (Switch body only)] Note 4)							
	Float type Note 5) auto drain		N.O.	—	—	AD38		AD48				
			N.C.	AD17	AD27	AD37		AD47				
Attachment	Spacer			Y100	Y200	Y300		Y400	Y500	Y600		
	Check valve Note 6) Note 7)			—	AKM2000-□01 (□02)	AKM3000-(□01) □02		AKM4000-(□02) □03	—	—	—	—
	Pressure switch Note 7)			—	IS1000M-20	IS1000M-30		IS1000M-40	IS1000M-50	IS1000M-60		
	T-interface Note 6) Note 7)			Y110-M5	Y210-□01 (□02)	Y310-(□01) □02		Y410-(□02) □03	Y510-(□02) □03	Y610-□03 (□04)	Y610-(□03) □04	
	3-port valve for residual pressure release Note 7)			—	VHS20-□01 □02	VHS30-□02 □03		□02 VHS40-□03 □04	VHS40-□06	VHS50-□06 □10	—	—
	Piping adapter Note 7)			E100-M5	□01 E200-□02 □03	□02 E300-□03 □04		□02 E400-□03 □04 □06	E500-□06	E600-□06 □10		
	Pressure switch with piping adapter Note 7)			—	□01 IS1000E-20□02 □03	□02 IS1000E-30□03 □04		□02 IS1000E-40□03 □04 □06	—	—	—	—
	Cross spacer Note 7)			Y14-M5	Y24-□01 □02	Y34-□01 □02		Y44-□02 □03	Y54-□03 □04	—	—	—

Note 1) □ in part numbers for a round pressure gauge indicates a type of connection thread. No indication is necessary for R; however, indicate N for NPT. Please contact SMC regarding the connection thread NPT and pressure gauge supply for psi unit specifications.
Note 2) Including one O-ring and 2 mounting screws
Note 3) Standard pressure gauge
Note 4) Lead wire with connector (2 m), adapter, lock pin, O-ring (1 pc.), mounting screw (2 pcs.) are attached. [ ]: Switch body only.
Also, regarding how to order the digital pressure switch, please refer to page 388.
Note 5) Minimum operating pressure: N.O. type–0.1 MPa; N.C. type–0.1 MPa (AD17/27) and 0.15 MPa (AD37/47). Please contact SMC for psi and °F unit specifications.
Note 6) For F.R.L. units, port sizes without ( ) are standard specifications.
Note 7) Separate interfaces are required for modular unit.

Check Valve: (K) 1/8, 1/4, 3/8

A check valve with intermediate air release port can be easily installed to prevent a backflow of lubricant when redirecting the air flow and releasing the air on the outlet side of the regulator.

AKM 30 00 – □ 01
❶ ❷ ❸

	Symbol	Description	❶ Body size 20	30	40
❷ Thread type	Nil	Rc	●	●	●
	N	NPT	●	●	●
	F	G	●	●	●
+					
❸ By-pass port size	01	1/8	●	●	—
	02	1/4	●	●	●
	03	3/8	—	—	●

JIS Symbol

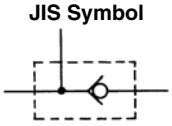

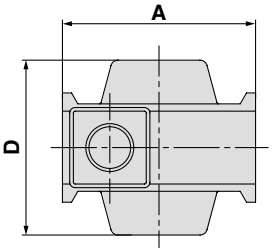

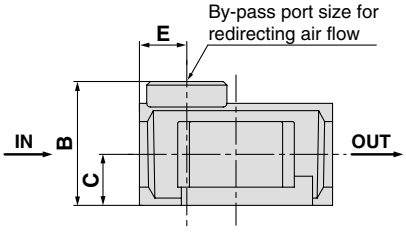



Model	By-pass port size	A	B	C	D	E	Applicable model
AKM2000	1/8, 1/4	40	28	11	40	11	**AC20, AC20A**
AKM3000	1/8, 1/4	53	34	14	48	13	**AC25, AC25A AC30, AC30A**
AKM4000	1/4, 3/8	70	42	18	54	15	**AC40, AC40A** Note)

Note) A pressure switch cannot be mounted on the AC40□-06.
∗ Refer to the attachment table above for standard by-pass port sizes applicable to the AC.

Specifications

Model	Effective area (mm²)
AKM2000	28
AKM3000	55
AKM4000	111

Be sure to use above check valves when redirecting the air flow on the inlet side of the lubricator. Threads for IN and OUT ports are not machined.

Pressure Switch: (S)

A compact integrated pressure switch can be easily installed and facilitates the pressure detection of the line.



IS1000M – 30 – □

❶ ❷

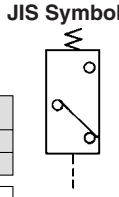

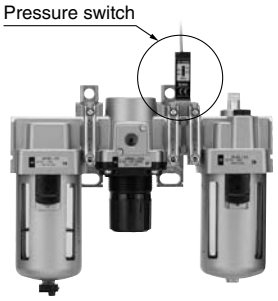

	Symbol	Description			❶ Body size				
		Lead wire length	Set pressure range	Pressure display	20	30	40	50	60
❷ Option	**Nil**	0.5 m	0.1 to 0.4 MPa	MPa	●	●	●	●	●
	P Note)	0.5 m	0.1 to 0.4 MPa	MPa/psi dual scale	●	●	●	●	●
	X202	0.5 m	0.1 to 0.6 MPa	MPa	●	●	●	●	●
	X202-P Note)	0.5 m	0.1 to 0.6 MPa	MPa/psi dual scale	●	●	●	●	●
	X201	3 m	0.1 to 0.4 MPa	MPa	●	●	●	●	●
	X201-P Note)	3 m	0.1 to 0.4 MPa	MPa/psi dual scale	●	●	●	●	●
	X215	3 m	0.1 to 0.6 MPa	MPa	●	●	●	●	●
	X215-P Note)	3 m	0.1 to 0.6 MPa	MPa/psi dual scale	●	●	●	●	●

Note) This product is for overseas use only according to the new Measurement Law. (The SI unit type is provided for use in Japan.)

Specifications

Fluid	Air
Ambient and fluid temperature	–5 to 60°C (with no freezing)
Proof pressure	1.0 MPa
Maximum operating pressure	0.7 MPa
Set pressure range (when OFF)	0.1 to 0.4 MPa
Hysteresis	0.08 MPa or less

Switch Characteristics

Contact point configuration	1a
Maximum contact point capacity	2 VA (AC), 2 W (DC)
Operating voltage: AC, DC	100 V or less
Maximum operating current	12 V to 24 VAC, DC: 50 mA 48 VAC, DC: 40 mA 100 VAC, DC: 20 mA

Note) For detailed specifications on the IS1000 series, please refer to series IS1000 in Best Pneumatics No.6.

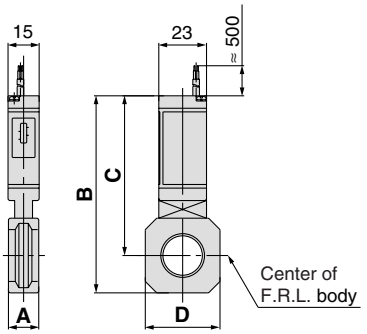

Model	A	B	C	D	Applicable model
IS1000M-20	11	76	66	28	**AC20□**
IS1000M-30	13	86	72	30	**AC25□, AC30□**
IS1000M-40	15	95	77	36	**AC40□**
IS1000M-50	17	99	79	44	**AC40□-06**
IS1000M-60	22	92.5	68.5	53	**AC50□, AC55□, AC60□**

Note) Separate spacers are required for modular unit.

T-interface: (T) M5 x 0.8, 1/8, 1/4, 3/8, 1/2

Using a T-interface facilitates the redirection of air flow.





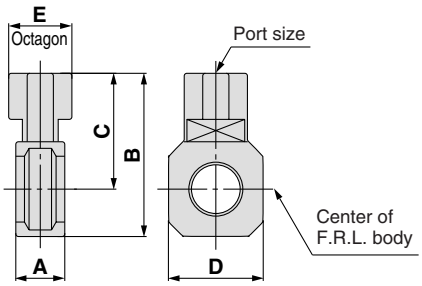

Model	Port size	A	B	C	D	E	Applicable model
Y110-M5	M5 x 0.8	11	19	12	14	8	**AC10, AC10B**
Y210-□01	1/8	15	42	32	28	19	**AC20, AC20B, AC20C**
Y210-□02	1/4						
Y310-□01	1/8	15	53	39	30	19	**AC25, AC25B, AC25C, AC30, AC30B, AC30C**
Y310-□02	1/4						
Y410-□02	1/4	19	62	44	36	24	**AC40, AC40B, AC40C**
Y410-□03	3/8						
Y510-□02	1/4	19	66	46	44	24	**AC40-06, AC40B-06 AC40C-06**
Y510-□03	3/8						
Y610-□03	3/8	22	81	57	53	30	**AC50, AC55, AC60, AC50B, AC55B, AC60B**
Y610-□04	1/2						

Note 1) □ in model numbers indicates a thread type. No indication is necessary for Rc; however, indicate N for NPT, and F for G.
Note 2) Separate interfaces are required for modular unit.
∗ Refer to the attachment table on page 321 for standard port sizes when using with the AC.

Caution on Mounting

If a T-interface is used on the IN side of the lubricator, lubricant may be mixed. Use the AKM series check valve to avoid such possibility.

Pressure Relief 3 Port Valve: (V)

With the use of a 3-port valve for residual pressure release, pressure left in the line can be easily exhausted.



VHS 30 – ❷ 03 – ❹

❶ ❷ ❸ ❹

JIS Symbol

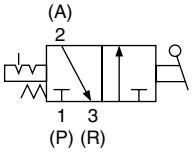

3-port valve for residual pressure release

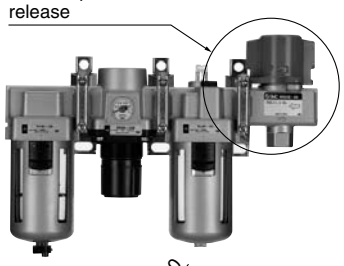

- Semi-standard: Select one each for **a** to **b**.
- Semi-standard symbol: When more than one specification is required, indicate in alphabetic order.
  Example) VHS30-03-RZ

	Symbol	Description	❶ Body size 20	30	40	50
❷ Thread type	**Nil**	Rc	●	●	●	●
	N Note)	NPT	●	●	●	●
	F Note)	G	●	●	●	●
❸ Port size	**01**	1/8	●	—	—	—
	02	1/4	●	●	●	—
	03	3/8	—	●	●	—
	04	1/2	—	—	●	—
	06	3/4	—	—	●	●
	10	1	—	—	—	●
❹ Semi-standard a Flow direction	**Nil**	Flow direction: Left to right	●	●	●	●
	R	Flow direction: Right to left	●	●	●	●
b Pressure unit	**Nil**	Name plate in imperial units: MPa	●	●	●	●
	Z Note)	Name plate in imperial units: psi	●	●	●	●

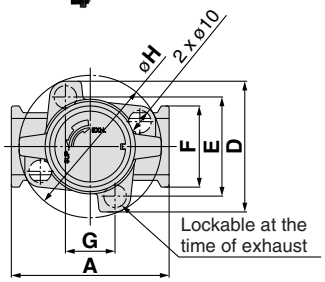

Note) For thread type: NPT only. This product is for overseas use only according to the new Measurement Law. (The SI unit type is provided for use in Japan.)

Specifications

Model	Port size IN, OUT	EXH	Effective area (mm^2) ( ): Cv factor IN→OUT	OUT→EXH
VHS20	1/8	1/8	10 (0.54)	11 (0.60)
	1/4		14 (0.76)	16 (0.87)
VHS30	1/4	1/4	16 (0.87)	14 (0.76)
	3/8		31 (1.68)	29 (1.57)
VHS40	1/4	3/8	27 (1.46)	36 (1.95)
	3/8		38 (2.06)	40 (2.17)
	1/2		55 (2.98)	42 (2.28)
VHS40-06	3/4	1/2	77 (1.73)	49 (2.66)
VHS50	3/4	1/2	82 (4.44)	50 (2.71)
	1		125 (6.78)	53 (2.87)

Note) Use an air filter on the IN side for operating protection.

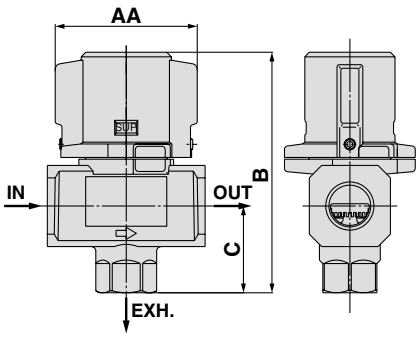

Model	A	AA	B	C	D	E	F	G	H
VHS20	40	34	59	20	45	33	28	—	45
VHS30	53	46	78	29	55	42	30	—	55
VHS40	70	63	107	39	58	44	36	22	63
VHS40-06	75	67	110	42	65	50	44	21	69
VHS50	90	78	134	53	76	61	54	26	81

Caution on Mounting

1. If a tube, stop valve or silencer is connected to the exhaust port of the VHS20/30, the effective sectional area should be larger than the figure indicated in the following table, to prevent malfunction caused by back pressure. (This is not applicable to the VHS40/50.)

Model	Effective area (mm^2)
VHS20	5
VHS30	5

Cross Spacer: M5 x 0.8, 1/8, 1/4, 3/8, 1/2

Pipings are possible in all 4 directions.
IN/OUT ports are not machined for threads.
Please contact SMC if threaded (machined) ports are required.



Cross spacer

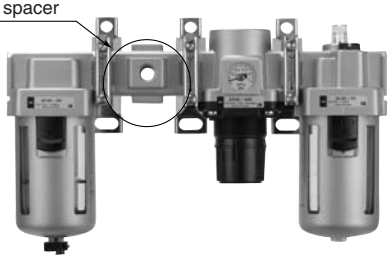

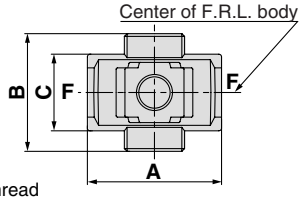

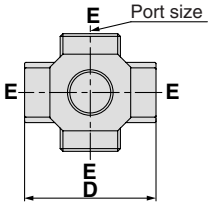

E: 4 x Rc
F: Without thread

Model	Port size	A	B	C	D	Applicable model
Y14-M5	M5	23	16	14	25	**AC10□**
Y24-□01	1/8	40	40	22	40	**AC20□**
Y24-□02	1/4					
Y34-□01	1/8	49	43	28	48	**AC25□, AC30□**
Y34-□02	1/4					
Y44-□02	1/4	60	48	36	54	**AC40□**
Y44-□03	3/8					
Y54-□03	3/8	72	62	40	62	**AC40□-06**
Y54-□04	1/2					

Note 1) □ in model numbers indicates a thread type. No indication is necessary for Rc; however, indicate N for NPT, and F for G.
Note 2) If threaded IN/OUT ports are required, they are available as a special order. Please contact SMC.

Caution on Mounting

1. When mounting a cross interface directly on the IN side of the lubricator, be sure to use the AKM series check valve between the lubricator and cross interface.
2. Factory mounting of a cross interface on the AC model is available as a special order.

Piping Adapter: M5 x 0.8, 1/8, 1/4, 3/8, 1/2, 3/4, 1

A piping adapter allows installation/removal of the component without removing the piping and thus makes maintenance easier.

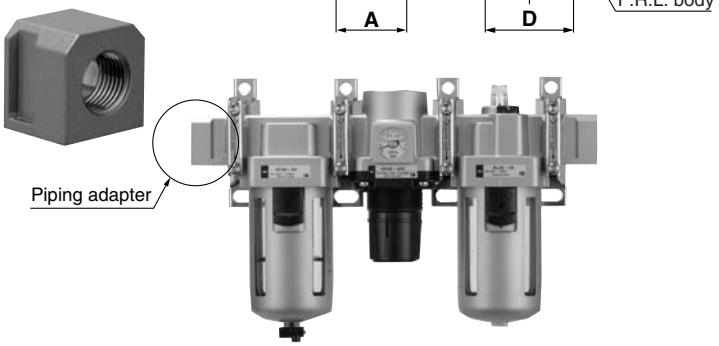

Model Note 1)	Port size	A	B	D	Applicable model
E100-M5	M5 x 0.8	10	14	14	**AC10□, AW10, AF10, AR10, AL10**
E200-□01	1/8	30	23.5	28	**AC20□ AF20, AR20□, AW20□ AL20, AFM20, AFD20, AWM20, AWD20**
E200-□02	1/4				
E200-□03	3/8				
E300-□02	1/4	32	30	30	**AC25□, AC30□ AF30, AR30□, AW30□ AL30, AFM30, AFD30, AWM30, AWD30**
E300-□03	3/8				
E300-□04	1/2				
E400-□02	1/4	32	36	36	**AC40□ AF40, AR40□, AW40□ AL40, AFM40, AFD40 AWM40, AWD40**
E400-□03	3/8				
E400-□04	1/2				
E400-□06	3/4				
E500-□06	3/4	32	40	44	**AC40□-06, AF40-06, AR40□-06, AW40□-06, AL40-06, AFM40-06, AFD40-06**
E600-□06	3/4	35	48	53	**AC50, AC55, AC60, AC50A AC60A, AC50B, AC55B AC60B, AF50, AF60, AR50□ AR60□, AL50, AL60, AW60□**
E600-□10	1				

Note 1) □ in model numbers indicates a thread type. No indication is necessary for Rc; however, indicate N for NPT, and F for G.
Note 2) Separate interfaces are required for modular unit.
∗ Factory mounting of a piping adapter on the AC models is available as a special order.

Pressure Switch with Piping Adapter

IS1000E − 30 ❷ 03 − ❹

❶ ❷ ❸ ❹

	Symbol	Description	❶ Body size 20	30	40
❷ Thread type	**Nil**	Rc	●	●	●
	N Note)	NPT	●	●	●
	F Note)	G	●	●	●
+					
❸ Port size	**01**	1/8	●	—	—
	02	1/4	●	●	●
	03	3/8	●	●	●
	04	1/2	—	●	●
	06	3/4	—	—	●
+					

	Symbol	Lead wire length	Regulating pressure range	Pressure display	Mounting position			
❹ Accessory	**Nil**	0.5 m	0.1 to 0.4 MPa	MPa	Right	●	●	●
	X250	0.5 m	0.1 to 0.4 MPa	MPa	Left	●	●	●
	P Note)	0.5 m	0.1 to 0.4 MPa	MPa/psi dual scale	Right	●	●	●
	X250-P Note)	0.5 m	0.1 to 0.4 MPa	MPa/psi dual scale	Left	●	●	●
	X202	0.5 m	0.1 to 0.6 MPa	MPa	Right	●	●	●
	X252	0.5 m	0.1 to 0.6 MPa	MPa	Left	●	●	●
	X202-P Note)	0.5 m	0.1 to 0.6 MPa	MPa/psi dual scale	Right	●	●	●
	X252-P Note)	0.5 m	0.1 to 0.6 MPa	MPa/psi dual scale	Left	●	●	●
	X201	3 m	0.1 to 0.4 MPa	MPa	Right	●	●	●
	X251	3 m	0.1 to 0.4 MPa	MPa	Left	●	●	●
	X201-P Note)	3 m	0.1 to 0.4 MPa	MPa/psi dual scale	Right	●	●	●
	X251-P Note)	3 m	0.1 to 0.4 MPa	MPa/psi dual scale	Left	●	●	●
	X215	3 m	0.1 to 0.6 MPa	MPa	Right	●	●	●
	X253	3 m	0.1 to 0.6 MPa	MPa	Left	●	●	●
	X215-P Note)	3 m	0.1 to 0.6 MPa	MPa/psi dual scale	Right	●	●	●
	X253-P Note)	3 m	0.1 to 0.6 MPa	MPa/psi dual scale	Left	●	●	●

Note) For thread type: NPT only. This product is for overseas use only according to the new Measurement Law. (The SI unit type is provided for use in Japan.)

JIS Symbol

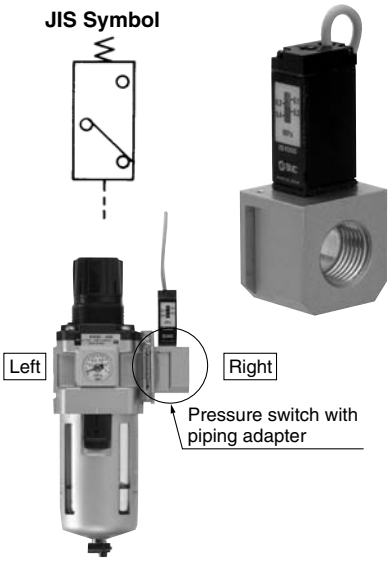

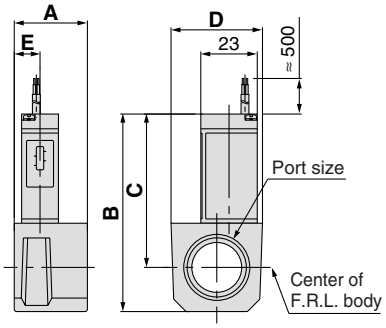

Specifications

Fluid	Air
Ambient and fluid temperature	–5 to 60°C (with no freezing)
Proof pressure	1.0 MPa
Maximum operating pressure	0.7 MPa
Set pressure range (when OFF)	0.1 to 0.4 MPa
Hysteresis	0.08 MPa or less

Switch Characteristics

Contact point configuration	1a
Maximum contact point capacity	2VA(AC), 2W(DC)
Operating voltage: AC, DC	100V or less
Maximum operating current	12V to 24V AC, DC: 50 mA 48V AC, DC: 40 mA 100V AC, DC: 20 mA

Model Note 1)	Port size	A	B	C	D	E	Applicable model
IS1000E-20□01	1/8	30	68	57	28	16	**AC20□ AR20□, AW20□ AWM20, AWD20**
IS1000E-20□02	1/4						
IS1000E-20□03	3/8						
IS1000E-30□02	1/4	32	74.5	60.5	30	13	**AC25□, AC30□ AR25□, AR30□, AW30□ AWM30, AWD30**
IS1000E-30□03	3/8						
IS1000E-30□04	1/2						
IS1000E-40□02	1/4	32	80.5	62.5	37	12.5	Note 2) **AC40□ AR40□, AW40□ AWM40, AWD40**
IS1000E-40□03	3/8						
IS1000E-40□04	1/2						
IS1000E-40□06	3/4						

Note 1) □ in the model numbers indicates a thread type. No indication is necessary for Rc; however, indicate N for NPT, and F for G.
Note 2) Cannot be mounted on the AC40□-06 and AW40□-06.
Note 3) Separate interfaces are required for modular unit.
∗ The pressure switch on the AC40□-06 and above and the AW40□-06 can be mounted by screwing IS1000-01 into the piping adapter E500-□06-X501 or E600-□06-X501 to E600-□10-X501 (with top-face thread Rc 1/8). Products with a premounted switch are available as a special order. Please contact SMC regarding their availability.

Spacer



Y200



Y400

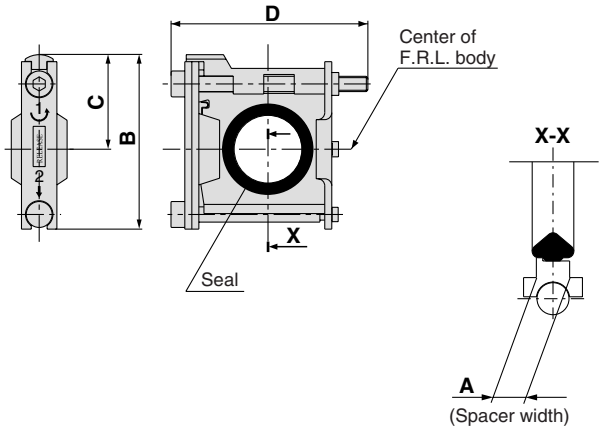

Model	A	B	C	D	Applicable model
Y100	6	27	15	33	**AC10, AC10A, AC10B**
Y200	3	35.5	18.5	48	**AC20□**
Y300	4	47	26	59	**AC25□, AC30□**
Y400	5	57	31	65	**AC40□**
Y500	5	61	33	75	**AC40□-06**
Y600	6	75.5	41	86	**AC50, AC55, AC60 AC50A, AC60A AC50B, AC55B, AC60B**

Replacement Parts

Description	Material	Part no.					
		Y100	**Y200**	**Y300**	**Y400**	**Y500**	**Y600**
Seal	HNBR Note 2)	Y100P-060AS Note 1)	Y200P-061S	Y300P-060S	Y400P-060S	Y500P-060S	Y600P-060S

Note 1) Assembly of 2 O-rings
Note 2) NBR is used for Y100 spacer because of no direct contact with fluid.

Spacer with Bracket



Y200T



Y400T

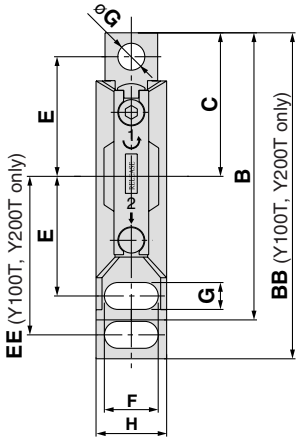

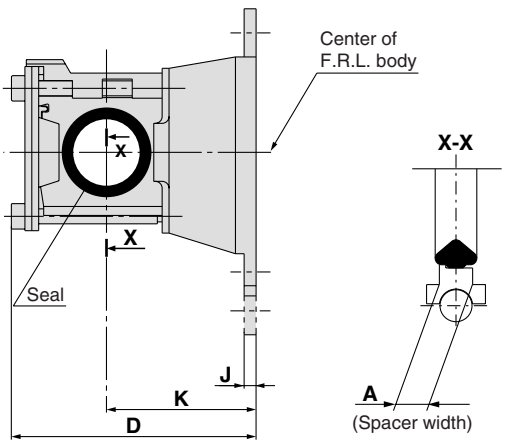

Model	A	B	BB	C	D	E	EE	F	G	øG	H	J	K	Applicable model
Y100T	6	—	56	24.5	40.5	20	27	6.8	4.5	4.5	14	2.8	25	**AC10□**
Y200T	3	—	67	29	53	24	33	12	5.5	5.5	19	3.2	30	**AC20□**
Y300T	4	82	—	41	68	35	—	14	7	7	21	4	41	**AC25□, AC30□**
Y400T	5	96	—	48	81.5	40	—	18	9	9	26	4	50	**AC40□**
Y500T	5	96	—	48	86	40	—	18	9	9	27	4.6	50	**AC40□-06**
Y600T	6	120	—	60	112	50	—	20	11	11	31	6.4	70	**AC50, AC55, AC60, AC50A, AC60A, AC50B, AC55B, AC60B**

Replacement Parts

Description	Material	Part no.					
		Y100T	**Y200T**	**Y300T**	**Y400T**	**Y500T**	**Y600T**
Seal	HNBR Note 2)	Y100P-060AS Note 1)	Y200P-061S	Y300P-060S	Y400P-060S	Y500P-060S	Y600P-060S

Note 1) Assembly of 2 O-rings
Note 2) NBR is used for Y100T spacer because of no direct contact with fluid.

Mounting Position for Spacer with Bracket

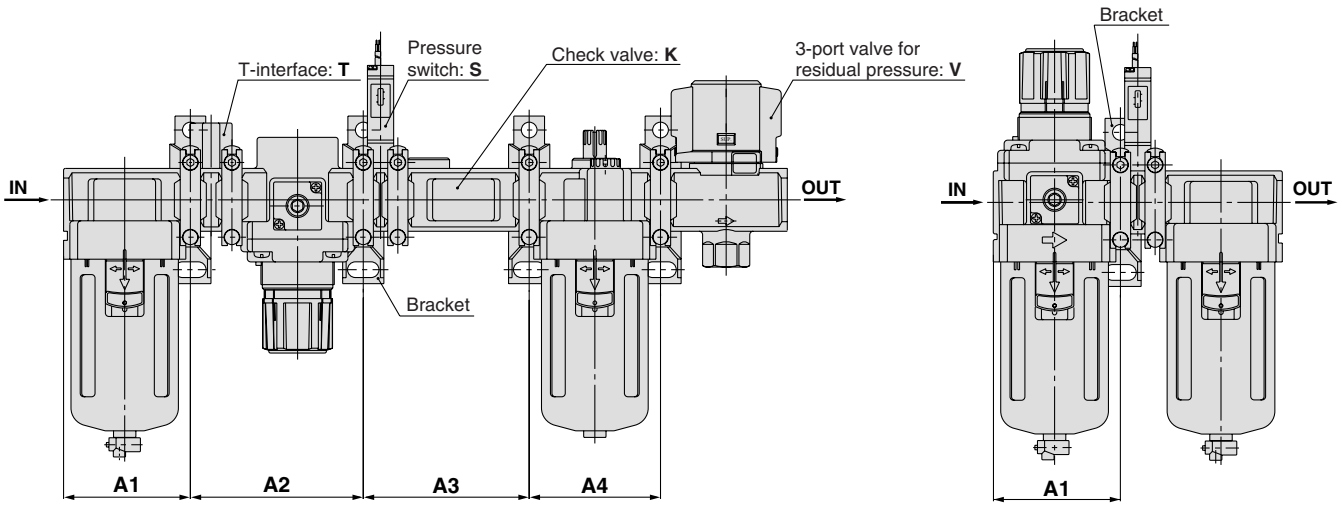

Attachment / Model	K			S		T		V			KS			KT			KV				KST		
	A1	A2	A3	A1	A2	A1	A2	A1	A2	A3	A1	A2	A3	A1	A2	A3	A1	A2	A3	A4	A1	A2	A3
AC10	—	—	—	—	—	28	48	—	—	—	—	—	—	—	—	—	—	—	—	—	—	—	—
AC20	41.5	43	43	41.5	43	41.5	61	41.5	43	43	41.5	43	57	41.5	61	43	41.5	43	43	43	41.5	61	57
AC25	55	57	57	55	57	55	76	55	57	57	55	57	74	55	76	57	55	57	57	57	55	76	74
AC30	55	57	57	55	57	55	76	55	57	57	55	57	74	55	76	57	55	57	57	57	55	76	74
AC40	72.5	75	75	72.5	75	72.5	99	72.5	75	75	72.5	75	95	72.5	99	75	72.5	75	75	75	72.5	99	95
AC40-06	—	—	—	77.5	80	77.5	104	77.5	80	80	—	—	—	—	—	—	—	—	—	—	—	—	—
AC50	—	—	—	93	96	93	124	93	96	96	—	—	—	—	—	—	—	—	—	—	—	—	—
AC55	—	—	—	98	96	98	124	—	—	—	—	—	—	—	—	—	—	—	—	—	—	—	—
AC60	—	—	—	98	101	98	129	—	—	—	—	—	—	—	—	—	—	—	—	—	—	—	—

Attachment / Model	KSV				KTV				KSTV				ST	SV			STV			TV		
	A1	A2	A3	A4	A1	A2	A3	A4	A1	A2	A3	A4	A1	A2	A1	A2	A3	A1	A2	A3	A1	A2	A3
AC10	—	—	—	—	—	—	—	—	—	—	—	—	—	—	—	—	—	—	—	—	—	—	—
AC20	41.5	43	57	43	41.5	61	43	43	41.5	61	57	43	41.5	61	41.5	43	57	41.5	61	57	41.5	61	43
AC25	55	57	74	57	55	76	57	57	55	76	74	57	55	76	55	57	74	55	76	74	55	76	57
AC30	55	57	74	57	55	76	57	57	55	76	74	57	55	76	55	57	74	55	76	74	55	76	57
AC40	72.5	75	95	75	72.5	99	75	75	72.5	99	95	75	72.5	99	72.5	75	95	72.5	99	95	72.5	99	75
AC40-06	—	—	—	—	—	—	—	—	—	—	—	—	77.5	104	77.5	80	102	77.5	104	102	77.5	104	80
AC50	—	—	—	—	—	—	—	—	—	—	—	—	93	124	93	96	124	93	124	124	93	124	96
AC55	—	—	—	—	—	—	—	—	—	—	—	—	98	124	—	—	—	—	—	—	—	—	—
AC60	—	—	—	—	—	—	—	—	—	—	—	—	98	129	—	—	—	—	—	—	—	—	—

Attachment / Model	K		S	V		KS		KV			KSV			SV	
	A1	A2	A1	A1	A2	A1	A2	A1	A2	A3	A1	A2	A3	A1	A2
AC20A	41.5	43	41.5	41.5	43	41.5	57	41.5	43	43	41.5	57	43	41.5	57
AC30A	55	57	55	55	57	55	74	55	57	57	55	74	57	55	74
AC40A	72.5	75	72.5	72.5	75	72.5	95	72.5	75	75	72.5	95	75	72.5	95
AC40A-06	—	—	77.5	77.5	80	—	—	—	—	—	—	—	—	77.5	102
AC50A	—	—	98	98	96	—	—	—	—	—	—	—	—	98	124
AC60A	—	—	98	—	—	—	—	—	—	—	—	—	—	—	—

Attachment / Model	S	T	V		V1		SV		SV1		TV		TV1	
	A1	A1	A1	A2	A1	A2	A1	A2	A1	A2	A1	A2	A1	A2
AC10B	—	28	—	—	—	—	—	—	—	—	—	—	—	—
AC20B	41.5	41.5	41.5	43	41.5	43	41.5	57	41.5	43	41.5	61	41.5	43
AC25B	55	55	55	57	55	57	55	74	55	57	55	76	55	57
AC30B	55	55	55	57	55	57	55	74	55	57	55	76	55	57
AC40B	72.5	72.5	72.5	75	72.5	75	72.5	95	72.5	75	72.5	99	72.5	75
AC40B-06	77.5	77.5	77.5	80	77.5	80	77.5	102	77.5	80	77.5	104	77.5	80
AC50B	93	93	93	96	93	96	93	124	93	96	93	124	93	96
AC55B	98	98	—	—	—	—	—	—	—	—	—	—	—	—
AC60B	98	98	—	—	—	—	—	—	—	—	—	—	—	—

Attachment / Model	S		T		V			V1			SV			SV1			TV			TV1		
	A1	A2	A1	A2	A1	A2	A3	A1	A2	A3	A1	A2	A3	A1	A2	A3	A1	A2	A3	A1	A2	A3
AC20C	41.5	43	41.5	43	41.5	43	43	41.5	43	43	41.5	43	57	41.5	43	43	41.5	43	61	41.5	43	43
AC25C	55	57	55	57	55	57	57	55	57	57	55	57	74	55	57	57	55	57	76	55	57	57
AC30C	55	57	55	57	55	57	57	55	57	57	55	57	74	55	57	57	55	57	76	55	57	57
AC40C	72.5	75	72.5	75	72.5	75	75	72.5	75	75	72.5	75	95	72.5	75	75	72.5	75	99	72.5	75	75
AC40C-06	77.5	80	77.5	80	77.5	80	80	77.5	80	80	77.5	80	102	77.5	80	80	77.5	80	104	77.5	80	80

Attachment / Model	S	V		V1		SV		SV1	
	A1	A1	A2	A1	A2	A1	A2	A1	A2
AC20D	41.5	41.5	43	41.5	43	41.5	57	41.5	43
AC30D	55	55	57	55	57	55	74	55	57
AC40D	72.5	72.5	75	72.5	75	72.5	95	72.5	75
AC40D-06	77.5	77.5	80	77.5	80	77.5	102	77.5	80

A1: Dimensions from the end of the IN side to the center of the mounting hole for the first bracket.
A2: Mounting hole pitch between the first and the second brackets.
A3: Mounting hole pitch between the second and the third brackets.
A4: Mounting hole pitch between the third and the fourth brackets.

Issued: Sep 2009

SMC Corporation of America
10100 SMC Boulevard
Noblesville, IN 46060
www.smcusa.com

P.G. Information

Epoxy Coated F.R.L. Units

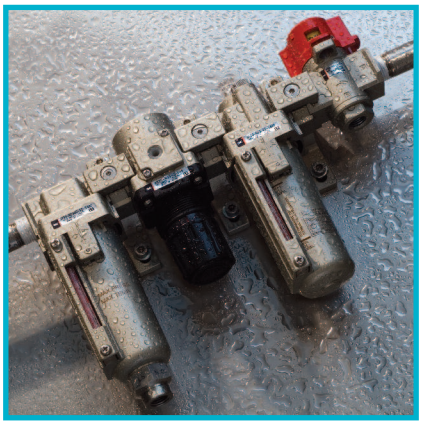

*AC21/31/41-***-*-X2217*
*AF20/30/40-***-*-X480*
*AR20/30/40-***-*-X48*
*AL20/30/40-***-*-X480*
*AW20/30/40-***-*-X48*
*VHS20/30/40-***-*-X513*
Y20/30/40-T4*

Application: Air preparation in an environment that requires enhanced corrosion protection.

Feature 1: Die cast aluminum components are epoxy coated for improved chemical resistance.

Feature 2: Steel external hardware is replaced with stainless steel for improved chemical resistance.

Comparison with Standard Product:

1) Functional performance is equivalent to standard product.
2) Product withstood salt spray testing per ASTM B117-07A with excellent results (See test results on page 12). Improved performance vs. other chemicals is anticipated but has not been verified.

Applications:

- Marine environments
- Water splash zone in various processes
- Washdown in food plants (non-food or splash zone only)

Related Products:

- KQG Series - 316 SUS One-touch Fittings - Coming Soon: KQG2
- KQB2 Series - Ni plated brass One-touch Fittings (Coming Soon)
- ASG Series - 316 SUS One-touch Speed Controls
- CG5 Series - repairable 304 SUS Cylinder
- NCM Series with X6009 option - crimped body 304 SUS Cylinder, domestic interchange
- CJ5 Series - crimped body 304 SUS Cylinder
- HY Series - Aluminum body Hygienic Design Actuators

How To Order

AC 31 B – N 03 D – V – 8 Y Z - X2217

- **AC** — Air Combination Unit
- **31** — Body Size

Symbol	Size
21	1/8
31	3/8
41	1/2

- **B** — Model Combination

Symbol	Model / Assembly Order
Nil	AF + AR + AL
A	AW + AL
B	AF + AR

- **N** — NPT Threads
- **03** — Port Size

Symbol	Port Size	Applicable Body Size
02	1/4	21
03	3/8	31
04	1/2	41

Note: Other sizes, thread forms, options, etc. may be possible, please contact SMC for availability.

- **D** — Accessories

Symbol	Description	Applicable Body Size
Nil	None	All
C	Float Auto Drain (N.C.)	31, 41
D	Float Auto Drain (N.O.)	31, 41

- **V** — Residual Pressure Relief Valve

Symbol	Description	Applicable Model Combo
Nil	Without Valve	All
V	With Downstream Valve	All

- **8** — Bowl

Symbol	Description	Applicable Body Size
2	Metal Bowl	21
8	Metal Bowl With Sight Glass	31, 41

- **Y** — Regulator Handle Orientation

Symbol	Description
Nil	Downward Handle
Y	Upward Handle

- **Z** — Name Plate, Caution Plate On Bowl in psi, °F
- **X2217** — With External Epoxy Coating, Stainless Fasteners



Specifications

Body size	21	31	41
Operating specifications	Same as standard - see catalog ES40-42D or NC160A		
Port size	1/4" NPT	3/8" NPT	1/2" NPT
Auto drain port (AF, AW)	N/A	1/4" NPT	
Bowl type (AF, AL, AW)	Metal	Metal with sight gauge	
Body material	Die cast aluminum		
Bowl material (AF, AL, AW)	Die cast aluminum		
Body, Bowl surface treatment	Epoxy resin coating		
Bonnet (AR, AW)	Polyacetal		
Manual drain (AF, AW)	POM		
External screws	Stainless steel 410		
Individual mounting brackets	Epoxy coated steel		
Panel mount nut (AR, AW)	POM		
Connector brackets (AC)	Die cast zinc (epoxy coated)		
Fill plug (AL)	Stainless steel 304		
Sight dome (AL)	Polycarbonate		
Sight glass hardware (AF, AL, AW)	Stainless steel 304		

Dimensions - Refer to drawings on page 3

mm

AC	A*	AA**	B	C	E	F	G	J	K	M	N	Q	U	V	W
AC21	140	190	160	73	—	45.5	40	26	5	30	51	24	5	33	—
AC31	181	245	220	86	30	58.5	55	29.5	3.5	41	64	35	7	45	34.5
AC41	238	322	239	92	38	75.5	80	37.5	1.5	50	81	40	7	50	41

* Without relief valve option ** With relief valve option

mm

AC-A	A*	AA**	B	C	E	F	G	J	K	M	N	Q	U	V	W
AC21A	90	140	160	73	—	45.5	40	26	5	30	51	24	5	33	—
AC31A	117	181	220	86	30	58.5	55	29.5	3.5	41	64	35	7	45	34.5
AC41A	154	238	239	92	38	75.5	80	37.5	1.5	50	81	40	7	50	41

* Without relief valve option ** With relief valve option

mm

AC-B	A*	AA**	B	C	E	F	G	J	K	M	N	Q	U	V	W
AC21B	90	140	160	73	—	45.5	40	26	5	30	51	24	5	33	—
AC31B	117	181	220	86	30	58.5	55	29.5	3.5	41	64	35	7	45	34.5
AC41B	154	238	239	92	38	75.5	80	37.5	1.5	50	81	40	7	50	41

* Without relief valve option ** With relief valve option

AC

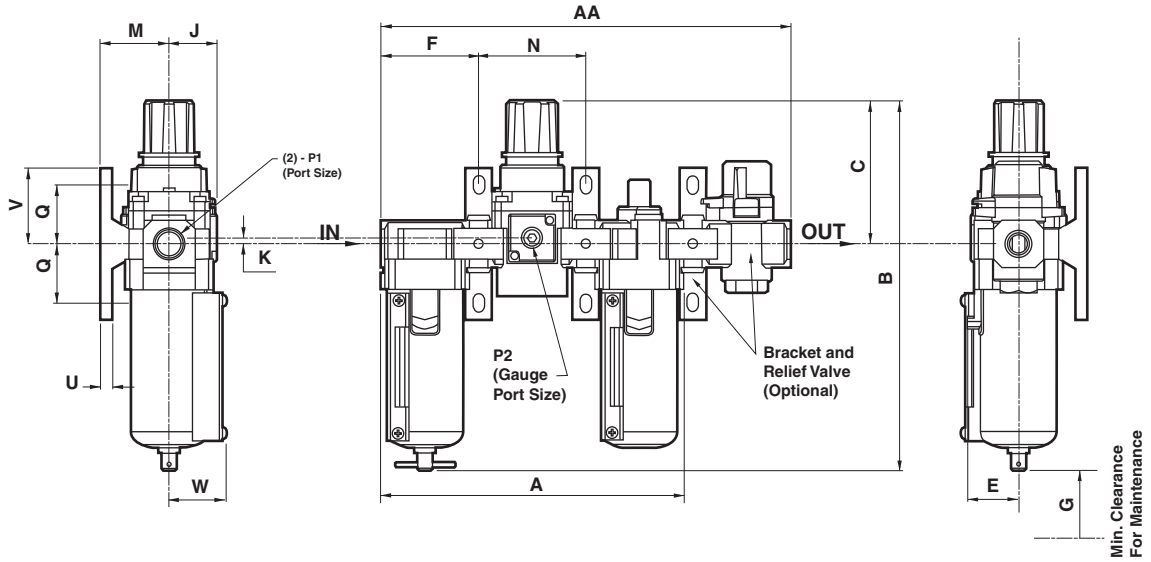

AC-A

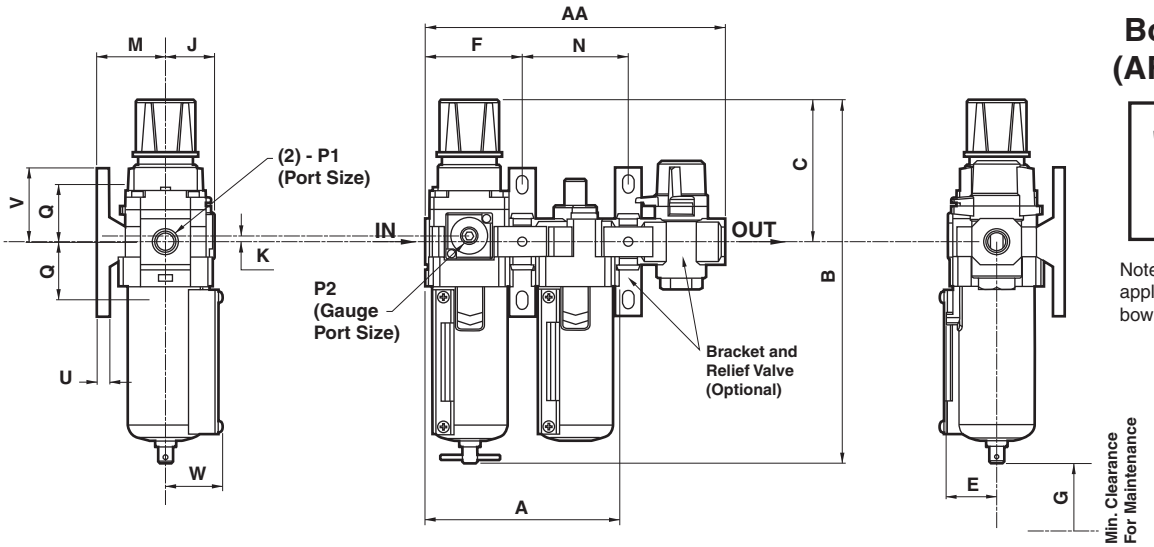

Bowl Detail (AF20/AW20)

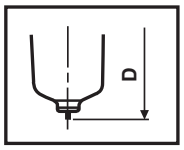

Note: Sight glass not applicable to all size 20 bowls.

AC-B

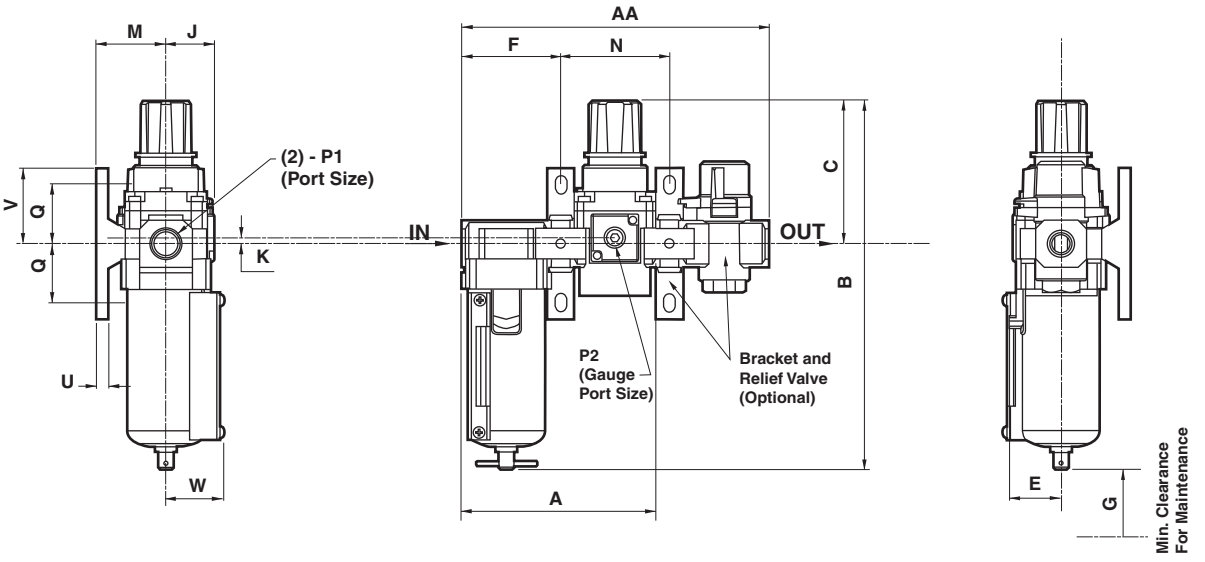

Notes: Filter & Filter Regulator Bowls depict manual drain, see individual sections for details with auto-drain options.

How To Order

AF 30 — N 03 D — 8 Z - X480

- **Filter**
- **Body Size**

Symbol	Size
20	1/8
30	3/8
40	1/2

- **NPT Threads**
- **Port Size**

Symbol	Port Size	Applicable Body Size
02	1/4	20
03	3/8	30
04	1/2	40

Note: Other sizes, thread forms, options, etc. may be possible, please contact SMC for availability.

- **Bowl**

Symbol	Description	Applicable Body Size
2	Metal Bowl	20
8	Metal Bowl With Sight Glass	30, 40

- **Accessories**

Symbol	Description	Applicable Body Size
Nil	None	All
B*	Mounting Bracket	All
C	Float Auto Drain (N.C.)	30, 40
D	Float Auto Drain (N.O.)	30, 40

*Note: Bracket is not assembled and is supplied loose at time of shipment.

- **Name Plate, Caution Plate On Bowl in psi, °F**
- **With External Epoxy Coating, Stainless Fasteners**



Specifications

Body size	20	30	40
Operating specifications	Same as standard - see catalog ES40-42D or NC160A		
Port size	1/4" NPT	3/8" NPT	1/2" NPT
Auto drain port	N/A	1/4" NPT	
Bowl type	Metal	Metal with sight gauge	
Body material	Die cast aluminum		
Bowl material	Die cast aluminum		
Body, Bowl surface treatment	Epoxy resin coating		
Manual drain (AF, AW)	POM		
External screws	Stainless steel 410		
Individual mounting brackets	Epoxy coated steel		
Sight glass hardware	Stainless steel 304		

Dimensions - Refer to drawings on page 5

Standard

mm

Model	Port Size	Dimensions																	Mounting Bracket Kit (Optional)
	A	C	D	E	F	G	H	J	K	L	M	N	P	Q	R	S	T	W	
AF20	NPT 1/4	40	97	10	40	—	18	30	27	22	5.4	8.4	40	2.3	26	32	M4 X 0.7	—	AF20P-050AS-X480
AF30	NPT 3/8	53	149	14	53	57	16	41	40	23	6.5	8	53	2.3	35	44	M4 X 0.7	34.5	AF30P-050AS-X480
AF40	NPT 1/2	70	185	18	70	73	17	50	54	26	8.5	10.5	70	2.3	47	60	M5 X 0.8	41	AF40P-050AS-X480

Auto Drain

mm

Model	Port Size	Dimensions																	Mounting Bracket Kit (Optional)
	A	C	D	E	F	G	H	J	K	L	M	N	P	Q	R	S	T	W	
AF30	NPT 3/8	53	158	14	53	57	16	41	40	23	6.5	8	53	2.3	35	44	M4 X 0.7	34.5	AF30P-050AS-X480
AF40	NPT 1/2	70	194	18	70	73	17	50	54	26	8.5	10.5	70	2.3	47	60	M5 X 0.8	41	AF40P-050AS-X480

Standard
(Manual Drain)

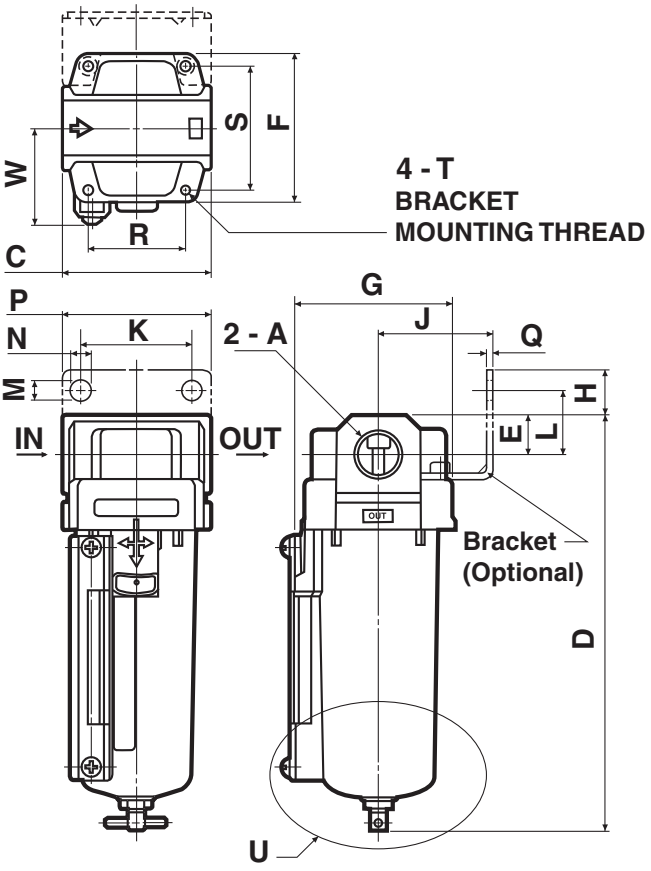

Bowl Detail U
(AF20)

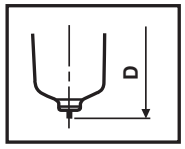

Note: Sight glass not applicable to AF20.

With Auto Drain

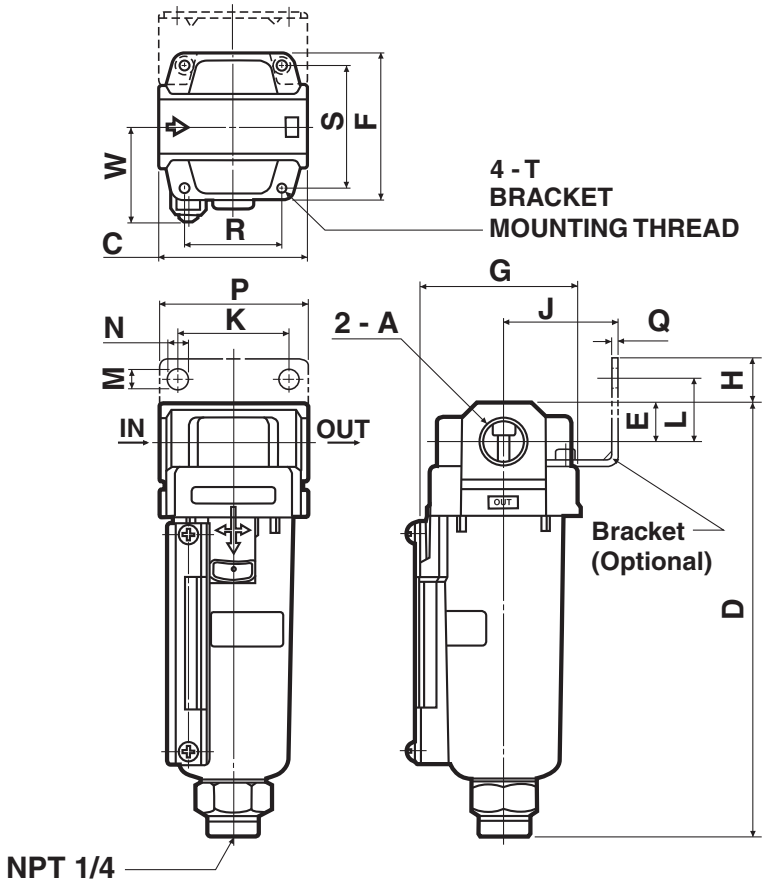

How To Order

AW 30 — N 03 D — 8 Z - X48

- AW: Filter - Regulator
- 30: Body Size

Symbol	Size
20	1/8
30	3/8
40	1/2

- N: NPT Threads
- 03: Port Size

Symbol	Port Size	Applicable Body Size
02	1/4	20
03	3/8	30
04	1/2	40

Note: Other sizes, thread forms, options, etc. may be possible, please contact SMC for availability.

- D: Accessories

Symbol	Description	Applicable Body Size
Nil	None	All
B*	Mounting Bracket	All
C	Float Auto Drain (N.C.)	30, 40
D	Float Auto Drain (N.O.)	30, 40
H*	Panel Mount Nut	All

*Note: Bracket and/or panel mount nut are not assembled and are supplied loose at time of shipment.

- 8: Bowl

Symbol	Description	Applicable Body Size
2	Metal Bowl	20
8	Metal Bowl With Sight Glass	30, 40

- Z: Name Plate, Caution Plate On Bowl in psi, °F
- X48: With External Epoxy Coating, Stainless Fasteners



Specifications

Body size	20	30	40
Operating specifications	Same as standard - see catalog ES40-42D or NC160A		
Port size	1/4" NPT	3/8" NPT	1/2" NPT
Auto drain port	N/A	1/4" NPT	
Bowl type	Metal	Metal with sight gauge	
Body material	Die cast aluminum		
Bowl material	Die cast aluminum		
Body, Bowl surface treatment	Epoxy resin coating		
Bonnet	Polyacetal		
Manual drain (AF, AW)	POM		
External screws	Stainless steel 410		
Individual mounting brackets	Epoxy coated steel		
Panel mount nut	POM		
Sight glass hardware	Stainless steel 304		

Accessories

Model	Mounting Bracket Kit (Optional)	Panel Mounting Nut (Optional)
AW20	AW20P-270AS-X480	AR20P-260S
AW30	AR30P-270AS-X480	AR30P-260S
AW40	AR40P-270AS-X480	AR40P-260S

Dimensions - Refer to drawings on page 7

Standard

mm

Model	Port Size	Gauge Port	Dimensions																		
	A	C	D	DD	E	F	H	J	K	L	Q	S	T	U	V	W	X	Y	Z	AA	CC
AW20	NPT 1/4	NPT 1/8	40	—	—	70(max.73)	5	157(max.160)	52	30	44	5.4	15.4	34	55	2.3	M28 X 1	30	6	14	28.5
AW30	NPT 3/8	NPT 1/8	53	34.5	30	83(max.86)	3.5	218(max.221)	59	41	46	6.5	8	40	53	2.3	M38 X 1.5	31	7	19	38.5
AW40	NPT 1/2	NPT 1/4	70	41	38	88(max.92)	1.5	255(max.259)	75	50	54	8.5	10.5	54	70	2.3	M42 X 1.5	35.5	7	21	42.5

Auto Drain

mm

Model	Port Size	Gauge Port	Dimensions																		
	A	C	D	DD	E	F	H	J	K	L	Q	S	T	U	V	W	X	Y	Z	AA	CC
AW30	NPT 3/8	NPT 1/8	53	34.5	30	83(max.86)	3.5	239(max.242)	59	41	46	6.5	8	40	53	2.3	M38 X 1.5	31	7	19	38.5
AW40	NPT 1/2	NPT 1/4	70	41	38	88(max.92)	1.5	276(max.280)	75	50	54	8.5	10.5	54	70	2.3	M42 X 1.5	35.5	7	21	42.5

Standard
(Manual Drain)

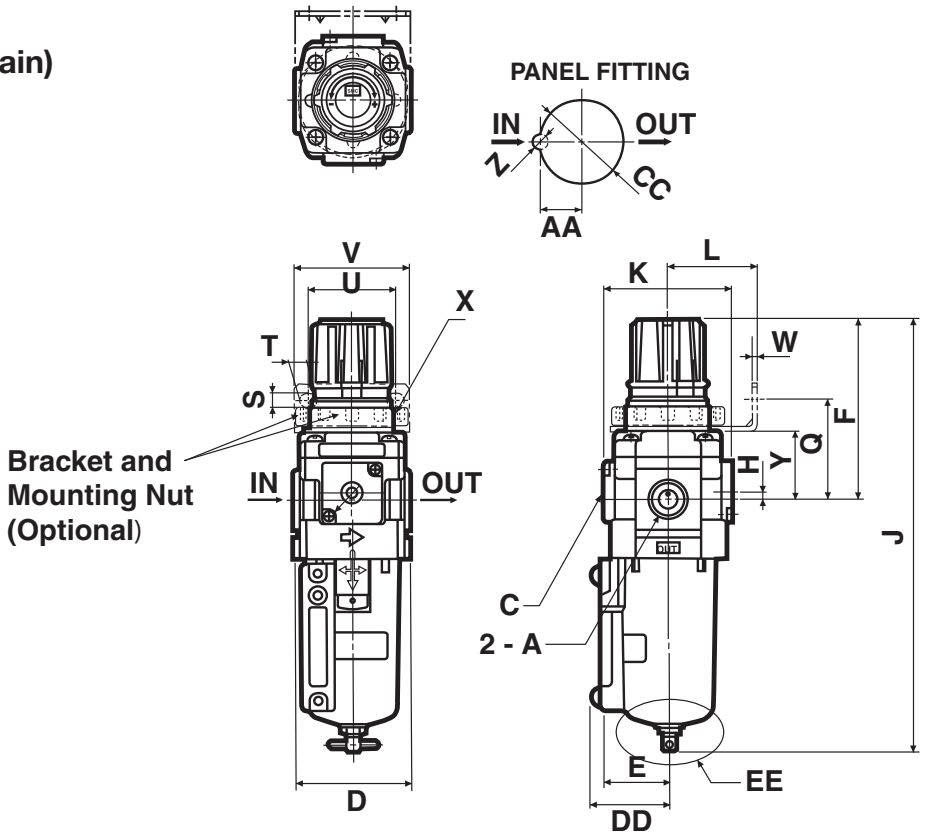

Bowl Detail EE
(AW20)

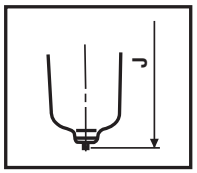

Note: Sight glass not applicable to AW20.

With Auto Drain

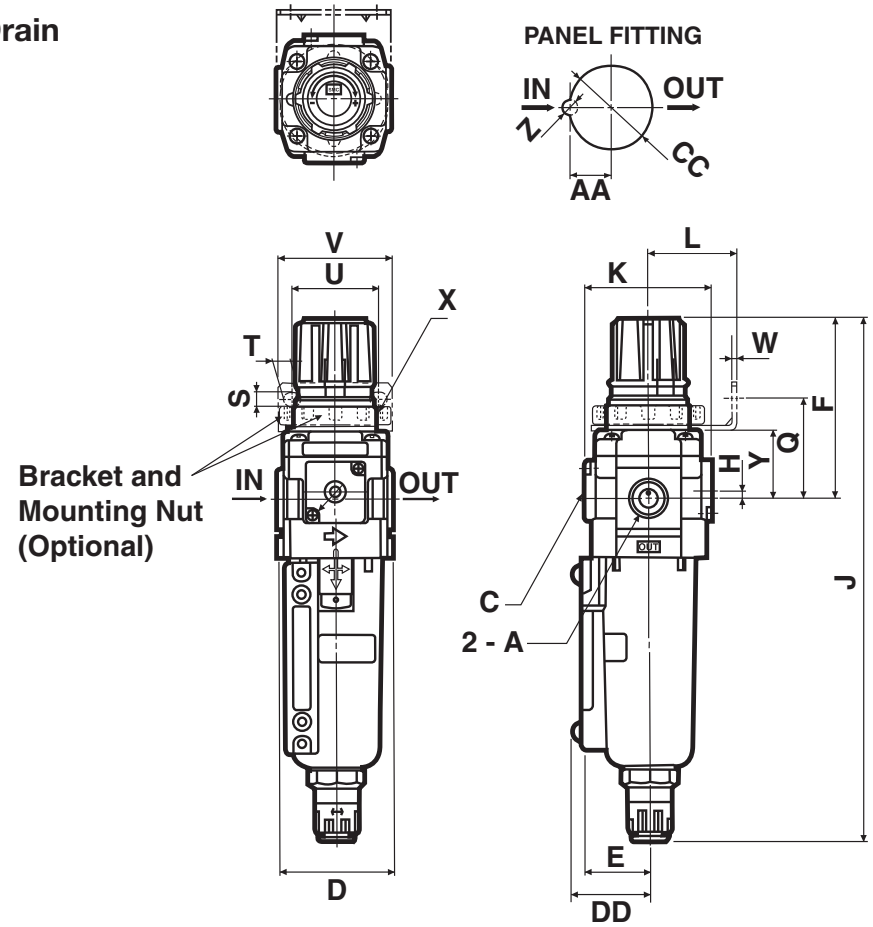

How To Order

AR 20 — N 02 B — Y Z - X48

- **AR** — Regulator
- **20** — Body Size

Symbol	Size
20	1/8
30	3/8
40	1/2

- **N** — NPT Threads
- **02** — Port Size

Symbol	Port Size	Applicable Body Size
02	1/4	20
03	3/8	30
04	1/2	40

- **B** — Accessories

Symbol	Description
Nil	None
B*	Mounting Bracket
H*	Panel Mount Nut

*Note: Bracket and/or panel mount nut are not assembled and are supplied loose at time of shipment.

- **Y** — Handle Orientation

Symbol	Description
Nil	Handle Down
Y	Handle Up

Note: Other sizes, thread forms, options, etc. may be possible, please contact SMC for availability.

- **Z** — Name Plate, Caution Plate On Bowl in psi, °F
- **X48** — With External Epoxy Coating, Stainless Fasteners



Specifications

Body size	20	30	40
Operating specifications	Same as standard - see catalog ES40-42D or NC160A		
Port size	1/4" NPT	3/8" NPT	1/2" NPT
Body material	Die cast aluminum		
Body, Bowl surface treatment	Epoxy resin coating		
Bonnet	Polyacetal		
Individual mounting brackets	Epoxy coated steel		
Panel mount nut	POM		

Dimensions

mm

Model	Port Size	Gauge Port	Dimensions																		
	A	C	D	E	F	H	J	K	L	M	P	Q	S	T	U	V	W	X	Y	Z	AA
AR20	NPT 1/4	NPT 1/8	40	57	26.5	-2	91(max.94)	30	65	37.5	44	5.4	15.4	34	55	2.3	M28 X 1	6	14	28.5	25
AR30	NPT 3/8	NPT 1/8	53	59	31	3.5	113(max.116)	41	66	37.5	46	6.5	8	40	53	2.3	M38 X 1.5	7	19	38.5	31
AR40	NPT 1/2	NPT 1/4	70	68	36	3.5	124(max.128)	50	74	42.5	54	8.5	10.5	54	70	2.3	M42 X 1.5	7	21	42.5	35.5

Accessories

Model	Mounting Bracket Kit (Optional)	Panel Mounting Nut (Optional)
AR20	AR20P-270AS-X48	AR20P-260S
AR30	AR30P-270AS-X48	AR30P-260S
AR40	AR40P-270AS-X48	AR40P-260S

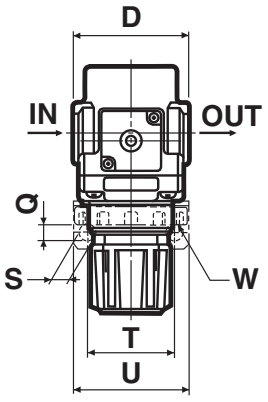

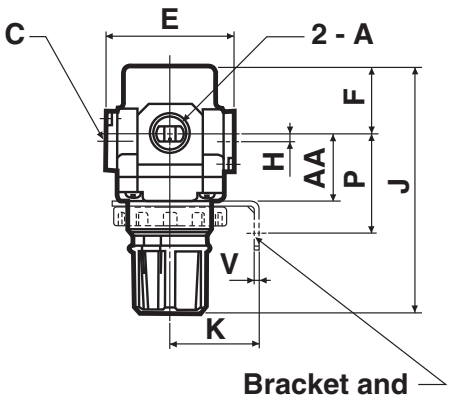

Bracket and Mounting Nut (Optional)

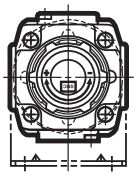

PANEL FITTING

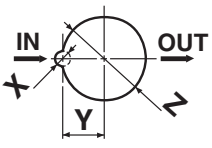

Plate Thickness
AR20, 30: Max 3.5
AR40: Max 5

How To Order

AL 20 — N 02 B — 2 Z - X480

- AL: Lubricator
- 20: Body Size

Symbol	Size
20	1/8
30	3/8
40	1/2

- N: NPT Threads
- 02: Port Size

Symbol	Port Size	Applicable Body Size
02	1/4	20
03	3/8	30
04	1/2	40

- B: Accessories

Symbol	Description	Applicable Body Size
Nil	None	All
B*	Mounting Bracket	All

*Note: Bracket is not assembled and is supplied loose at time of shipment.

- 2: Bowl

Symbol	Description	Applicable Body Size
2	Metal Bowl	20
8	Metal Bowl With Sight Glass	30, 40

- Z: Name Plate, Caution Plate On Bowl in psi, °F
- X480: With External Epoxy Coating, Stainless Fasteners

Note: Other sizes, thread forms, options, etc. may be possible, please contact SMC for availability.



Specifications

Body size	20	30	40
Operating specifications	Same as standard - see catalog ES40-42D or NC160A		
Port size	1/4" NPT	3/8" NPT	1/2" NPT
Bowl type	Metal	Metal with sight gauge	
Body material	Die cast zinc	Die cast aluminum	
Bowl material	Die cast aluminum		
Body, Bowl surface treatment	Epoxy resin coating		
Individual mounting brackets	Epoxy coated steel		
Fill plug	Stainless steel 304		
Sight dome	Polycarbonate		
Sight glass hardware	Stainless steel 304		

Dimensions

mm

Model	Port Size	Dimensions																	Mounting Bracket Kit (Optional)
	A	C	D	E	F	G	H	J	K	L	M	N	P	Q	R	S	T	W	
AL20	NPT 1/4	40	121	36	40	—	28	30	27	22	5.4	8.4	40	2.3	26	32	M4 X 0.7	—	AF20P-050AS-X480
AL30	NPT 3/8	53	162	38	53	57	30	41	40	23	6.5	8	53	2.3	35	44	M4 X 0.7	34.5	AF30P-050AS-X480
AL40	NPT 1/2	70	196	40	70	73	35	50	54	26	8.5	10.5	70	2.3	47	60	M5 X 0.8	41	AF40P-050AS-X480

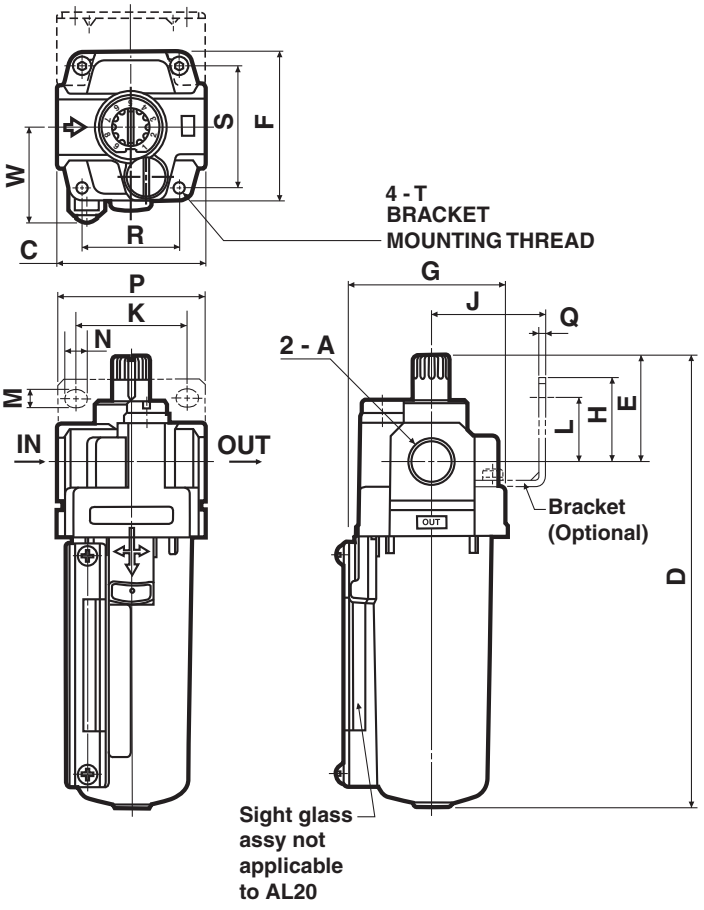

Residual Pressure Relief 3 Port Valve (V)

With the use of a 3 port valve for residual pressure release, pressure left in the line can be easily exhausted.





JIS Symbol

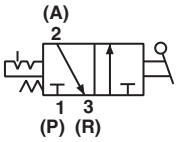

Model	Port Size		Effective area mm² (Cv)	
	IN, OUT	EXH	IN to OUT	OUT to EXH
VHS20	1/4	1/8	14 (0.76)	16 (0.87)
VHS30	3/8	1/4	31 (1.68)	29 (1.57)
VHS40	1/2	3/8	55 (2.98)	42 (2.28)

Paint color (Standard) Handle: Red Body: Platinum silver
Use an air filter on the IN side for operating protection.

How To Order

VHS 30 — N 02 — Z - X513

Residual Pressure Relief 3 Port Valve

Body Size

Symbol	Applicable Model
20	AC21
30	AC31
40	AC41

Thread Type

N	NPT

Body Size

Symbol	Port Size	Body Size		
		20	30	40
02	1/4	●		
03	3/8		●	
04	1/2			●

With External Epoxy Coating, Stainless Fasteners

Name Plate In Imperial Units (PSI, °F)

Note: Other sizes, thread forms, options, etc. may be possible, please contact SMC for availability.

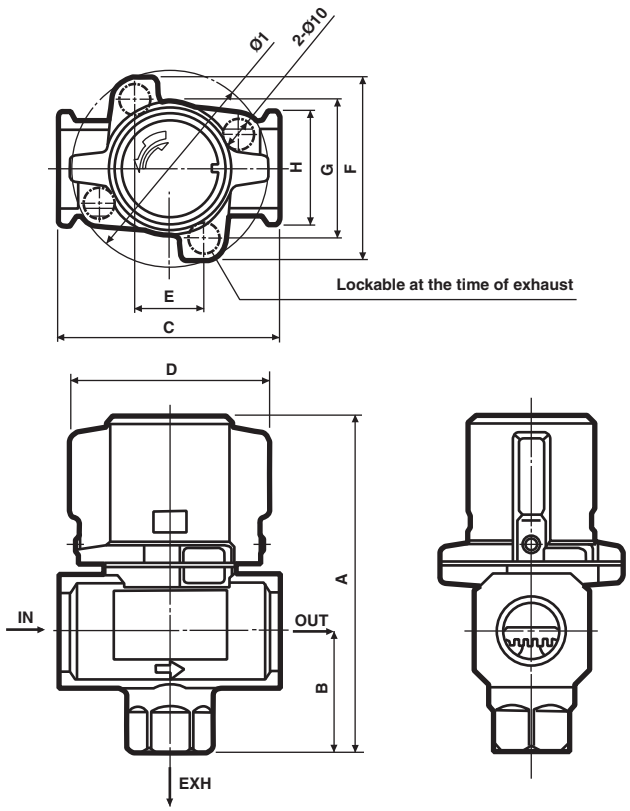

Dimensions

mm

Model	A	B	C	D	E	F	G	H	I
VHS20	59	20	40	34	—	45	33	28	45
VHS30	78	29	53	46	—	55	42	30	55
VHS40	107	39	70	63	22	58	44	36	63

Caution

- If a stop valve or a silencer is connected to the exhaust port of VHS20/30, the effective sectional area should be larger than the figure indicated in the following table, to prevent malfunction caused by back pressure. (This is not applicable to VHS40)

Model	Effective area (mm²)
VHS20	5
VHS30	5

- If unit is to be used in a washdown application, avoid directing fluid into the exhaust port.

Spacer

Epoxy Coated Aluminum,
Stainless Screws,
NBR Seals



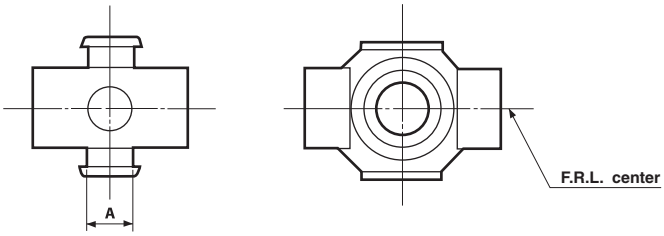

Dimensions

mm

Model	A
Y20-T4	10
Y30-T4	11
Y40-T4	14

Interface With T Bracket

Epoxy Coated Aluminum, Stainless Screws,
NBR Seals

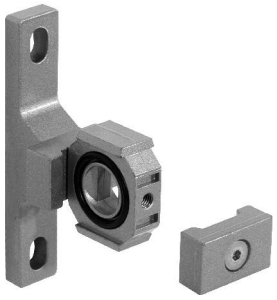

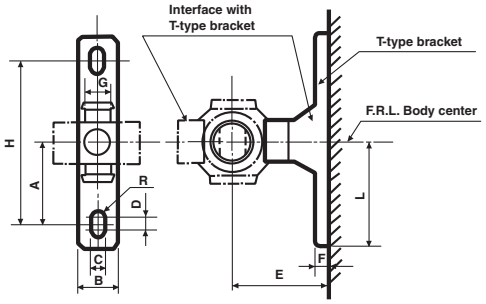

Dimensions

mm

Interface With T Bracket	A	B	C	D	E	F	G	H	R	L	Applicable Models
Y20T-T4	24	15	5.5	3	30	5	10	48	2.75	33	AC21*-X2217
Y30T-T4	35	16	7	4	41	7	11	70	3.5	45	AC31*-X2217
Y40T-T4	40	22	9	4	50	7	14	80	4.5	50	AC41*-X2217

Other Available Air Line Products with Epoxy Coating/Stainless Hardware

Series	Description	Option Code
(N)AV	Soft Start Valve	X480
AMG	Water Removal Filter	X229
AR20-60	Regulator with Stainless T-handle, aluminum bonnet for UV resistance	X480
AVL	Soft Start Valve with Pilot Lock-Out	X480
AW20-40	Filter-Regulator with Stainless T-handle, aluminum bonnet for UV resistance	X480
E*00	Piping Adapter	X480
Y*10	T Interface	X480
Y*4	Cross Interface	T3

Please contact SMC for ordering information

Salt Spray Test Results (for reference)

1. Test Conditions

1) Method: In compliance with ASTM B117-07a (JIS Z 2371), leave parts in a salt spray test chamber, and compare rust generation.

2) Conditions: Temperature: 95˚F (35˚C) Salt Water Concentration: 5%

3) Time: 1000 hours [Frequency: 0hr, 24hrs, 48hrs, 72hrs, 96hrs, 168hrs, 240hrs, 480hrs, 720hrs, 1000hrs]

4) Samples: Parts for AF and AW30 (See Figure 1.)

- Part descriptions: 4 parts (1) Body (2) Drain cock (3) Small screw for level gauge (4) Bonnet screw
- Types: 2 Types A) Standard B) Special X480 (Coated with epoxy resin [External metal parts are made of SUS])
- Refer to Table 1 for part materials and treatments. *Quantity; 2 pieces for each

2. Test Results Table 1 Salt spray resistance test results

No.	Description	Type		Material & Treatment	Results
1	Body	A	Standard	Material: Die Cast Aluminum Treatment: Platinum Coating	Rusted in 480hrs Part of coating swelled
		B	Special X480	Material: Die Cast Aluminum Treatment: Platinum & Epoxy Coating	Not rusted in 1000hrs Part of coating swelled
2	Drain cock	A	Standard	Material: Die Cast Aluminum Treatment: Zinc Chromate	Rusted in 24hrs
		B	Special X480	Material: SUS	Not rusted in 1000hrs
3	Cross recessed round head screw for metal bowl with level gauge	A	Standard	Material: Steel Treatment: Nickel Plating	Rusted in 24hrs
		B	Special X480	Material: SUS	Not rusted in 1000hrs
4	Self-tapping screw for AR and AW bonnet	A	Standard	Material: Steel Treatment: Zinc Chromate	Rusted in 24hrs
		B	Special X480	Material: SUS	Not rusted in 1000hrs

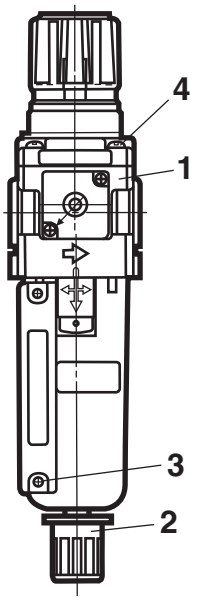

Figure 1

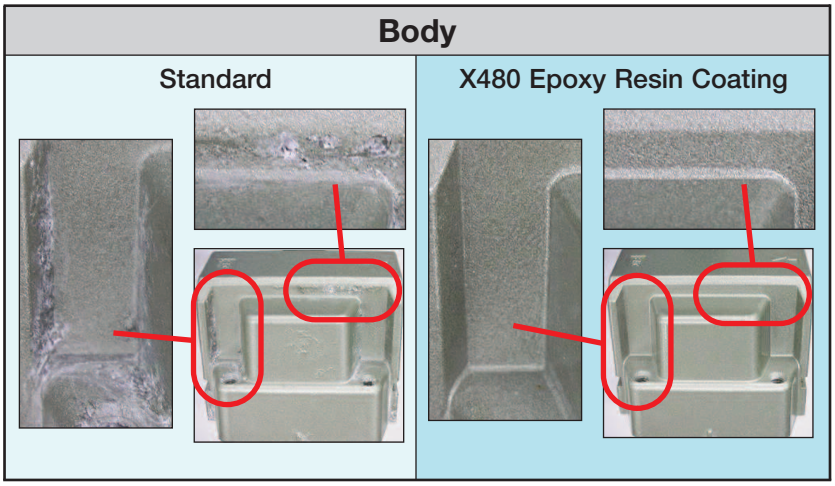

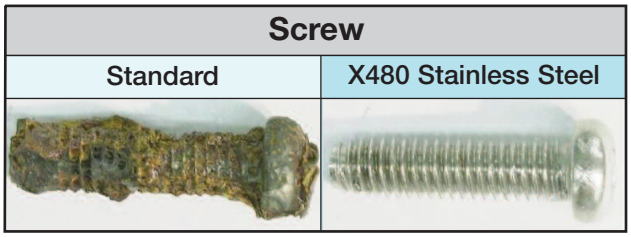

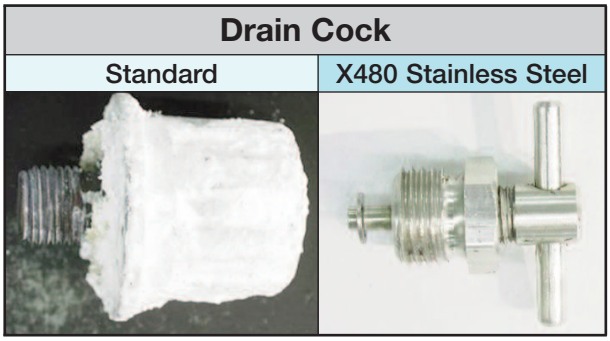

Caution! To ensure the safest possible operation of this product, please be sure to read thoroughly the “Safety Instructions” in our “Best Pneumatics” catalog before use.

©2009 SMC Corporation All Rights Reserved