Air Cylinder

Series CM2

ø20, ø25, ø32, ø40

Series Variations

Series	Action	Rod	Cushion	Basic	Standard variations: Built-in One-touch fitting	Standard variations: With rod boot	Standard variations: Air-hydro	Standard variations: Clean series	Standard variations: Copper/ Fluorine-free	Bore size (mm)	Page
Standard *Series CM2* 	Double acting	Single rod	Rubber	●	●	●	●	●	●	20, 25, 32, 40	128
			Air	●	●	●	●	●	●		
		Double rod	Rubber	●	●	●	●		●		146
			Air	●					●		
	Single acting	Single rod (Spring return/ Spring extend)	Rubber	●	●				●		156
Non-rotating Rod *Series CM2K* 	Double acting	Single rod	Rubber	●		●			●		171
			Air	●		●			●		
		Double rod	Rubber	●					●		176
			Air	●					●		
	Single acting	Single rod (Spring return/ Spring extend)	Rubber	●					●		181
Direct Mount *Series CM2R* 	Double acting	Single rod	Rubber	●			●	●	●		186
			Air	●					●		
Direct Mount, Non-rotating Rod *Series CM2RK* 	Double acting	Single rod	Rubber	●					●		193
Low Friction *Series CM2Q* 	Use the new **"Smooth Cylinder Series CM2Y"** to realize both-direction low friction and low-speed operation. (Refer to Best Pneumatics No. 3.)										198
Centralized Piping *Series CM2□P* 	Double acting	Single rod	Rubber	●		●			●	20, 25, 32, 40	199
With End Lock *Series CBM2* 	Double acting	Single rod	Rubber	●		●		● (Lock in head rod only)	●		204
			Air	●		●			●		

Low-speed cylinder *Series CM2X* 	Refer to Best Pneumatics No. 3.

Combinations of Standard Products and Made to Order Specifications

Use the new "**Smooth Cylinder Series CM2Y**" to realize both-direction low friction and low-speed operation. (Refer to Best Pneumatics No. 3.)

● : Standard
◎ : Made to Order specifications
○ : Special product (Contact SMC for details.)
— : Not available

Symbol	Specification	Applicable bore size	CM2 (Standard) Double acting Single rod Rubber	CM2 (Standard) Double acting Single rod Air	CM2 (Standard) Double acting Double rod Rubber	CM2 (Standard) Double acting Double rod Air	CM2 (Standard) Single acting Single rod Rubber	CM2K (Not-rotating) Double acting Single rod Rubber	CM2K (Not-rotating) Double acting Single rod Air	CM2K (Not-rotating) Double acting Double rod Rubber	CM2K (Not-rotating) Double acting Double rod Air	CM2K (Not-rotating) Single acting Single rod Rubber	CM2R (Direct mount) Double acting Single rod Rubber	CM2R (Direct mount) Double acting Single rod Air	CM2RK (Direct mount, Non-rotating) Double acting Single rod Rubber	CM2□P (Centralized Piping) Double acting Single rod Rubber	CM2□Q (Low Friction) Double acting Single rod Rubber	CBM2 (With end Lock) Double acting Single rod Rubber	CBM2 (With end Lock) Double acting Single rod Air	CM2X Low-speed cylinder Note 2) Double acting Single rod Rubber
			ø20 to ø40												ø20 to ø40					
Standard	Standard	ø20 to ø40	●	●	●	●	●	●	●	●	●	●	●	●	●	●	●	●	●	●
D	Built-in magnet		●	●	●	●	●	●	●	●	●	●	●	●	●	●	●	●	●	●
CM2□F	With one-touch fittings		●	●	●	●	●	●	●	●	●	●	○	○	○	○	○	○	○	○
CM2□-□ J K	With rod boot		●	●	●	●	○	●	●	○	○	○	○	○	○	●	○	●	—	○
CM2□H	Air-hydro type		●	—	●	—	—	—	—	—	—	—	●	—	—	—	—	—	—	—
10-, 11-	Clean series		●	●	●	●	○	—	—	—	—	—	●	○	—	○	○	● Note 3)	○	●
20-	Copper and Fluorine-free		●	●	●	●	●	●	●	●	●	●	●	●	●	○	—	●	○	—
CM2□ R V	Water resistant		●	●	●	○	○	—	—	—	—	—	○	○	—	○	—	● Note 3)	○	—
CM2□X	Low-speed cylinder		●	○	○	○	—	—	—	—	—	—	●	—	—	○	—	—	—	●
XB6	Heat-resistant cylinder (–10 to 150°C) Note 1)		◎	◎	◎	◎	○	◎	◎	◎	◎	○	◎	◎	◎	—	—	◎	○	—
XB7	Cold-resistant cylinder Note 1)		◎	○	◎	○	○	○	○	○	○	○	◎	○	○	—	—	—	—	—
XB9	Low-speed cylinder (5 to 50 mm/s)		◎	○	○	○	—	○	○	○	○	—	◎	○	○	○	○	◎	○	—
XB12	External stainless steel cylinder		◎	○	◎	○	◎	◎	○	○	○	◎	○	○	○	—	○	○	○	○
XB13	Low-speed cylinder (5 to 50 mm/s)		◎	○	○	○	—	○	○	○	○	—	◎	○	○	○	○	—	—	—
XC3	Special port position		◎	◎	◎	◎	◎	◎	◎	◎	◎	◎	◎	○	◎	○	◎	◎	○	◎
XC4	With heavy duty scraper		◎	◎	◎	◎	○	—	—	—	—	—	○	○	—	◎	—	◎ Note 3)	○	—
XC5	Heat-resistant cylinder (–10 to 110°C) Note 1)		◎	◎	◎	◎	○	○	○	○	○	○	◎	◎	○	—	—	○	○	—
XC6	Made of stainless steel		◎	◎	◎	◎	◎	◎	◎	◎	◎	◎	◎	◎	◎	◎	○	◎	○	○
XC8	Adjustable stroke cylinder/Adjustable extension type		◎	◎	—	—	○	◎	◎	—	—	○	◎	○	◎	—	○	◎ Note 3)	○ Note 3)	—
XC9	Adjustable stroke cylinder/Adjustable retraction type		◎	◎	—	—	○	◎	◎	—	—	○	◎	◎	◎	—	○	○ Note 4)	○ Note 4)	—
XC10	Dual stroke cylinder/Double rod type		◎	○	—	—	○	◎	○	—	—	○	○	○	○	—	○	○	○	—
XC11	Dual stroke cylinder/Single rod type	ø20 to ø40	◎	◎	—	—	—	◎	◎	—	—	—	◎	◎	◎	—	○	○	○	—
XC12	Tandem cylinder		◎	○	—	—	—	○	—	—	—	—	◎	—	○	—	—	—	—	—
XC13	Auto switch rail mounting		◎	◎	◎	◎	◎	◎	◎	◎	◎	◎	◎	◎	◎	○	○	◎	○	○
XC20	Head cover axial port		◎	○	—	—	◎	◎	○	—	—	◎	◎	○	◎	—	○	○ Note 4)	—	○
XC22	Fluororubber seal		◎	◎	◎	◎	○	◎	◎	◎	○	◎	◎	◎	◎	—	—	◎	◎	—
XC25	No fixed orifice of connecting port		◎	—	◎	—	◎	◎	—	◎	—	○	◎	—	◎	—	○	○	—	○
XC27	Double clevis pins made of stainless steel (Stainles steel 304)		◎	◎	—	—	◎	◎	◎	—	—	◎	—	—	—	○	○	◎	◎	○
XC29	Double knuckle joint with spring pin		◎	◎	◎	◎	◎	○	○	○	○	○	◎	◎	○	◎	○	◎	◎	○
XC35	With coil scraper		◎	○	◎	○	○	—	—	—	—	—	○	○	—	○	—	◎ Note 3)	◎	—
XC38	Vacuum specification (Rod through-hole)		—	—	◎	◎	—	—	—	○	○	—	—	—	—	—	—	—	—	—
XC52	Mounting nut with set screw		◎	◎	◎	◎	◎	◎	◎	◎	◎	◎	—	—	—	◎	○	◎	◎	○

Note 1) The products with an auto switch are not compatible.
Note 2) Refer to Best Pneumatics No. 3 for Low-speed cylinders.
Note 3) Available only for locking at head end.
Note 4) Available only for locking on rod side.

Air Cylinder: Standard Type
Double Acting, Single Rod
Series CM2
ø20, ø25, ø32, ø40

How to Order

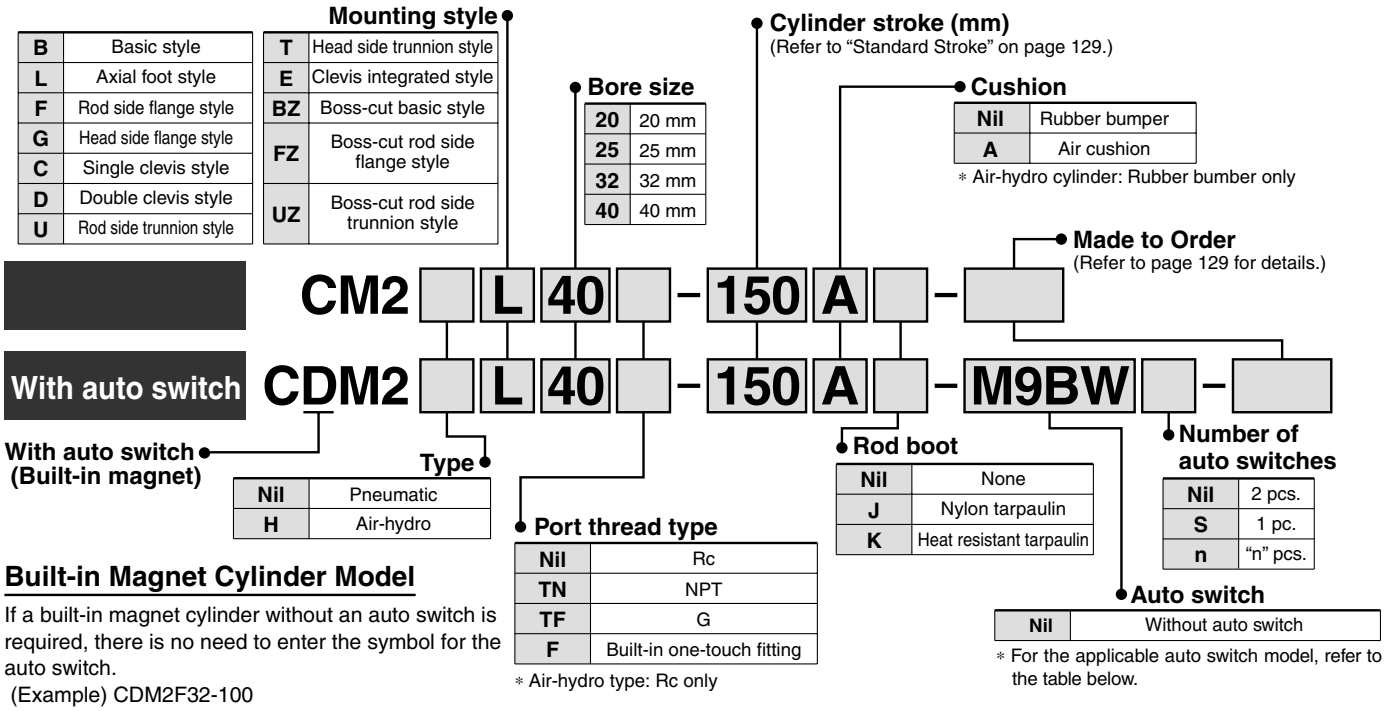

Built-in Magnet Cylinder Model

If a built-in magnet cylinder without an auto switch is required, there is no need to enter the symbol for the auto switch.
(Example) CDM2F32-100

Applicable Auto Switch/Refer to pages 1263 to 1371 for further information on auto switches.

Type	Special function	Electrical entry	Indicator light	Wiring (Output)	Load voltage DC	Load voltage DC	Load voltage AC	Auto switch model	Lead wire length (m) 0.5 (Nil)	1 (M)	3 (L)	5 (Z)	None (N)	Pre-wired connector	Applicable load	
Solid state switch	——	Grommet	Yes	3-wire (NPN)	24V	5V, 12V	—	**M9N**	●	●	●	○	—	○	IC circuit	Relay, PLC
				3-wire (PNP)				**M9P**	●	●	●	○	—	○		
				2-wire		12V		**M9B**	●	●	●	○	—	○	—	
		Connector						**H7C**	●	—	●	●	●	—		
		Terminal conduit		3-wire (NPN)		5V, 12V		**G39A** **	—	—	—	—	●	—	IC circuit	
				2-wire		12V		**K39A** **	—	—	—	—	●	—	—	
	Diagnostic indication (2-color indication)	Grommet		3-wire (NPN)		5V,12V		**M9NW**	●	●	●	○	—	○	IC circuit	
				3-wire (PNP)				**M9PW**	●	●	●	○	—	○		
				2-wire		12V		**M9BW**	●	●	●	○	—	○	—	
	Water resistant (2-color indication)							**H7BA**	—	—	●	○	—	○		
	With diagnostic output (2-color indication)			4-wire (NPN)		5V, 12V		**H7NF**	●	—	●	○	—	○	IC circuit	
Reed switch	——	Grommet	Yes	3-wire (NPN equivalent)	—	5V	—	**A96**	●	—	●	—	—	—	IC circuit	—
			No	2-wire	24V	12V	100V	**A93**	●	—	●	—	—	—	—	Relay, PLC
			Yes				100V or less	**A90**	●	—	●	—	—	—	IC circuit	
			No				100V, 200V	**B54** **	●	—	●	●	—	—	—	
		Connector	Yes				200V or less	**B64** **	●	—	●	—	—	—		
			No				—	**C73C**	●	—	●	●	●	—		
		Terminal conduit	Yes				24V or less	**C80C**	●	—	●	●	●	—	IC circuit	
							—	**A33A** **	—	—	—	—	●	—	—	PLC
		DIN terminal					100V, 200V	**A34A** **	—	—	—	—	●	—		Relay, PLC
								A44A **	—	—	—	—	●	—		
	Diagnostic indication (2-color indication)	Grommet				—	—	**B59W**	●	—	●	—	—	—		

* Lead wire length symbols: 0.5 m ·····Nil (Example) M9NW
1 m ····· M (Example) M9NWM
3 m ····· L (Example) M9NWL
5 m ····· Z (Example) M9NWZ
None ····· N (Example) H7CN

* Solid state auto switches marked with "○" are produced upon receipt of order.
* D-A9□V/M9□V/M9□WV and D-M9□A(V)L cannot be mounted.
* Do not indicate suffix "N" for no lead wire on D-A3□A/A44A/G39A/K39A models.
** D-A3□A/A44A/G39A/K39A/B54/B64 cannot be mounted on bore sizes ø20 and ø25 cylinder with air cushion.

* Since there are other applicable auto switches than listed above, refer to page 218 for details.
* For details about auto switches with pre-wired connector, refer to pages 1328 and 1329.
* D-A9□/M9□/M9□W auto switches are shipped together (not assembled). (However, auto switch mounting brackets are assembled when being shipped.)



Clevis integrated

JIS Symbol
Double acting,
Single rod

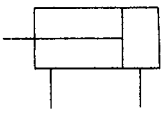



With air cushion

Specifications

Bore size (mm)		20	25	32	40
Type		Pneumatic			
Action		Double acting, Single rod			
Fluid		Air			
Proof pressure		1.5 MPa			
Maximum operating pressure		1.0 MPa			
Minimum operating pressure		0.05 MPa			
Ambient and fluid temperature		Without auto switch: −10 to +70°C (No freezing) With auto switch: −10 to +60°C (No freezing)			
Lubrication		Not required (Non-lube)			
Stroke length tolerance		$^{+1.4}_{0}$ mm			
Piston speed		Rubber bumper: 50 to 750 mm/s, Air cushion: 50 to 1000 mm/s			
Cushion		Rubber bumper, Air cushion			
Allowable kinetic energy	**Rubber bumper**	0.27 J	0.4 J	0.65 J	1.2 J
	Air cushion (Effective cushion length (mm))	0.54 J (11.0)	0.78 J (11.0)	1.27 J (11.0)	2.35 J (11.8)

Standard Stroke

Bore size (mm)	Standard stroke (1) (mm)	Maximum stroke (mm)
20	25, 50, 75, 100, 125, 150 200, 250, 300	1000
25		1500
32		2000
40		2000

Note 1) Other intermediate strokes can be manufactured upon receipt of order. Manufacture of intermediate strokes at 1 mm intervals is possible. (Spacers are not used.)
Note 2) When exceeding 300 strokes, the allowable maximum stroke length is determined by the stroke selection table (front matter 28).

Made to Order Specifications
(For details, refer to pages 1373 to 1498.)

Symbol	Specifications
—XA□	Change of rod end shape
—XB6	Heat resistant cylinder (150°C)
—XB7	Cold resistant cylinder
—XB9	Low speed cylinder (10 to 50 mm/s)
—XB12	External stainless steel cylinder
—XB13	Low speed cylinder (5 to 50 mm/s)
—XC3	Special port location
—XC4	With heavy duty scraper
—XC5	Heat resistant cylinder (110°C)
—XC6	Piston rod and rod end nut made of stainless steel
—XC8	Adjustable stroke cylinder/Adjustable extension type
—XC9	Adjustable stroke cylinder/Adjustable retraction type
—XC10	Dual stroke cylinder/Double rod type
—XC11	Dual stroke cylinder/Single rod type
—XC12	Tandem cylinder
—XC13	Auto switch mounting rail style
—XC20	Head cover axial port
—XC22	Fluororubber seals
—XC25	No fixed orifice of connecting port
—XC27	Double clevis pin and double knuckle pin made of stainless steel
—XC29	Double knuckle joint with spring pin
—XC35	With coil scraper
—XC52	Mounting nut with set screw

Rod Boot Material

Symbol	Rod boot material	Maximum ambient temperature
J	Nylon tarpaulin	70°C
K	Heat resistant tarpaulin	110°C *

* Maximum ambient temperature for the rod boot itself.

Refer to pages 214 to 218 for cylinders with auto switches.

- Minimum stroke for auto switch mounting
- Proper auto switch mounting position (detection at stroke end) and mounting height
- Operating range
- Switch mounting bracket: Part no.

Boss-cut style

Boss for the head side cover bracket is eliminated and the total length of cylinder is shortened.



Comparison of the Full Length Dimension (Versus standard type)

(mm)

ø20	ø25	ø32	ø40
▲13	▲13	▲13	▲16

Mounting style

■ Boss-cut basic style (BZ) ■ Boss-cut flange style (FZ)
■ Boss-cut trunnion style (UZ)

Mounting Bracket/Part No.

Mounting bracket	Min. order	Bore size (mm)				Description (for min. order)
		20	25	32	40	
Axial foot *	2	CM-L020B	CM-L032B		CM-L040B	2 foot, 1 mounting nut
Flange	1	CM-F020B	CM-F032B		CM-F040B	1 flange
Single clevis**	1	CM-C020B	CM-C032B		CM-C040B	1 single clevis, 3 liners
Double clevis**** (with pins)	1	CM-D020B	CM-D032B		CM-D040B	1 double clevis, 3 liners, 1 clevis pins, 2 retaining rings
Trunnion (with nuts)	1	CM-T020B	CM-T032B		CM-T040B	1 trunnion, 1 trunnion nut

* Order 2 foot brackets for each cylinder unit.
** 3 Liners are attached with a clevis bracket for adjusting the mounting angle.
*** Clevis pins and retaining rings (cotter pins for ø40) are attached.

Mounting Style and Accessory

Mounting \ Accessory	Standard equipment			Option					
	Mounting nut	Rod end nut	Clevis pin	Single knuckle joint	Double knuckle joint (3)	Clevis bracket (4)	Rod boot	Pivot bracket (6)	Pivot bracket pin (7)
Basic style	●(1 pc.)	●	—	●	●	—	●	—	—
Axial foot style	●(2)	●	—	●	●	—	●	—	—
Rod side flange style	●(1)	●	—	●	●	—	●	—	—
Head side flange style	●(1)	●	—	●	●	—	●	—	—
Clevis integrated style	—(1)	●	—	●	●	●	●	—	—
Single clevis style	—(1)	●	—	●	●	—	●	●	●
Double clevis style(3)	—(1)	●	●(5)	●	●	—	●	—	—
Rod side trunnion style	●(1)(2)	●	—	●	●	—	●	●	●
Head side trunnion style	●(1)(2)	●	—	●	●	—	●	●	●
Boss-cut basic style	●(1)	●	—	●	●	—	●	—	—
Boss-cut flange style	●(1)	●	—	●	●	—	●	—	—
Boss-cut trunnion style	●(1)	●	—	●	●	—	●	—	—

Note 1) Mounting nuts are not attached for clevis integrated style, single clevis, and double clevis styles.
Note 2) Trunnion nuts are attached for rod side trunnion and head side trunnion styles.
Note 3) Knuckle pin and snap ring (cotter pin for ø40) are shipped together with double clevis and double knuckle joint.
Note 4) Pin and snap ring are shipped together with clevis bracket.
Note 5) Clevis pins come with retaining rings (cotter pins for ø40).
Note 6) Pivot brackets do not come with pins and retaining rings.
Note 7) Pivot bracket pins come with retaining rings.

Mounting Bracket, Accessory/Material, Surface Treatment

Segment	Component parts	Material	Surface treatment
Mounting bracket	Foot	Rolled steel plate	Nickel plated
	Flange	Rolled steel plate	Nickel plated
	Single clevis	Rolled steel	Nickel plated
	Double clevis	Rolled steel	Nickel plated
	Trunnion	Cast iron	Electroless nickel plated
Accessory	Rod end nut	Carbon steel	Nickel plated
	Mounting nut	Carbon steel	Nickel plated
	Trunnion nut	Carbon steel	Nickel plated
	Clevis bracket	Rolled steel plate	Nickel plated
	Clevis pin	Carbon steel	(None)
	Single knuckle joint	Rolled steel ø40: Sulfur easy chipping steel	Electroless nickel plated
	Double knuckle joint	Rolled steel ø40: Cast iron	Electroless nickel plated Metallic bronze color painted for ø40
	Double clevis pin	Carbon steel	(None)
	Double knuckle joint pin	Carbon steel	(None)
	Pivot bracket	Rolled steel plate	Nickel plated
	Pivot bracket pin	Carbon steel	(None)

Mass

(kg)

Bore size (mm)		20	25	32	40
Basic mass	Basic style	0.14	0.21	0.28	0.56
	Axial foot style	0.29	0.37	0.44	0.83
	Flange style	0.20	0.30	0.37	0.68
	Clevis integrated style	0.12	0.19	0.27	0.52
	Single clevis style	0.18	0.25	0.32	0.65
	Double clevis style	0.19	0.27	0.33	0.69
	Trunnion style	0.18	0.28	0.34	0.66
	Boss-cut basic style	0.13	0.19	0.26	0.53
	Boss-cut flange style	0.19	0.28	0.35	0.65
	Boss-cut trunnion style	0.17	0.26	0.32	0.63
Additional mass per each 50 mm of stroke		0.04	0.06	0.08	0.13
Option bracket	Clevis bracket (With pin)	0.07	0.07	0.14	0.14
	Single knuckle joint	0.06	0.06	0.06	0.23
	Double knuckle joint (With pin)	0.07	0.07	0.07	0.20
	Pivot bracket	0.06	0.06	0.06	0.06
	Pivot bracket pin	0.02	0.02	0.02	0.03

Calculation: (Example) **CM2L32-100**
- Basic mass·····0.44 (Foot style, ø32)
- Additional mass·····0.08/50 stroke
- Cylinder stroke·····100 stroke

0.44 + 0.08 x 100/50 = 0.60 kg

⚠ Precautions

Be sure to read before handling. Refer to front matters 54 and 55 for Safety Instructions and pages 3 to 11 for Actuator and Auto Switch Precautions.

Operating Precautions

⚠ Warning

1. Do not rotate the cover.
If a cover is rotated when installing a cylinder or screwing a fitting into the port, it is likely to damage the junction part with cover.

2. Do not operate with the cushion needle in a fully closed condition.
Using it in the fully closed state will cause the cushion seal to be damaged. When adjusting the cushion needle, use the “Hexagon wrench key: nominal size 1.5”.

3. Do not open the cushion needle wide excessively.
If the cushion needle were set to be completely wide (more than 3 turns from fully closed), it would be equivalent to the cylinder with no cushion, thus making the impacts extremely high. Do not use it in such a way. Besides, using with fully open could give damage to the piston or cover.

⚠ Caution

1. Not able to disassemble.
Cover and cylinder tube are connected to each other by caulking method, thus making it impossible to disassemble. Therefore, internal parts of a cylinder other than rod seal are not replaceable.

2. Use caution to the popping of a retaining ring.
When replacing rod seals and removing and mounting a snap ring, use a proper tool (retaining ring plier: tool for installing a type C retaining ring). Even if a proper tool is used, it is likely to inflict damage to a human body or peripheral equipment, as a retaining ring may be flown out of the tip of a plier. Be much careful with the popping of a retaining ring. Besides, be certain that a retaining ring is placed firmly into the groove of rod cover before supplying air at the time of installment.

3. Do not touch the cylinder during operation.
Use caution when handling a cylinder, which is running at a high speed and a high frequency, because the surface of a cylinder tube could get so hot enough as to cause you get burned.

4. Do not use an air cylinder as an air-hydro cylinder.
If it uses turbine oil in place of fluids for cylinder, it may result in oil leakage.

5. Combine the rod end section, so that a rod boot might not be twisted.
If a rod boot is installed with being twisted when installing a cylinder, it will cause a rod boot to fail during operation.

Air-hydro

CM2H | **Mounting style** | **Bore size** | — | **Stroke** | **Rod boot**

Air-hydro

A low hydraulic pressure cylinder used at a pressures of 1.0 MPa or below.
Through the concurrent use of a CC series air-hydro unit, it is possible to operate at a constant or low speeds or to effect an intermediate stop, just like a hydraulic unit, while using pneumatic equipment such as a valve.



Specifications

Type	Air-hydro
Fluid	Turbine oil
Action	Double acting single rod
Bore size (mm)	ø20, ø25, ø32, ø40
Proof pressure	1.5 MPa
Max. operating pressure	1.0 MPa
Min. operating pressure	0.18 MPa
Piston speed	15 to 300 mm/s
Ambient and fluid temperature	+5 to +60°C
Stroke length tolerance	$^{+1.4}_{0}$ mm
Cushion	Rubber bumper (Standard equipment)
Mounting	Basic style, Axial foot style, Rod side flange style, Head side flange style, Single clevis style, Double clevis style, Rod side trunnion style, Head side trunnion style, Clevis integrated style, Boss-cut style

∗ Auto switch can be mounted. Dimensions are the same as standard type of series CM2.

- For construction, refer to page 134.
- Since the dimensions of mounting style is the same as pages 136 to 143, refer to those pages.

Built-in One-touch Fittings

CM2 | **Mounting style** | **Bore size** | **F** — **Stroke**

Built-in One-touch fittings

This type has the One-touch fitting integrated in a cylinder, which enables to reduce the piping labor and installing space dramatically.



Specifications

Action	Double acting, Single rod
Bore size (mm)	ø20, ø25, ø32, ø40
Max. operating pressure	1.0 MPa
Min. operating pressure	0.05 MPa
Cushion	Rubber bumper
Piping	One-touch fittings
Piston speed	50 to 750 mm/s
Mounting	Basic style, Axial foot style, Rod side flange style, Head side flange style, Single clevis style, Double clevis style, Rod side trunnion style, Head side trunnion style, Clevis integrated style, Boss-cut style

∗ Auto switch can be mounted.

Applicable Tubing O.D./I.D.

Bore size (mm)	**20**	**25**	**32**	**40**
Applicable tubing O.D./I.D. (mm)	6/4	6/4	6/4	8/6
Applicable tubing material	Can be used for either nylon, soft nylon or polyurethane tubing.			

⚠ Caution

1. One-touch fitting cannot be replaced.
   • One-touch fitting is press-fit into the cover, thus cannot be replaced.
2. Refer to Fittings and Tubing Precautions (Best Pneumatics No. 6) for handling one-touch fittings.

- For construction, refer to page 134.
- For dimensions of each mounting style, refer to pages 136 to 143.
- For other specifications, refer to page 129.

Clean Series

10-CM2 | Mounting style | Bore size | Stroke

- **Clean Series (With relief port)**

The type which is applicable for using inside the clean room graded Class 100 by making an actuator's rod section a double seal construction and discharging by relief port directly to the outside of clean room.



Specifications

Action	Double acting, Single rod
Bore size (mm)	ø20, ø25, ø32, ø40
Max. operating pressure	1.0 MPa
Min. operating pressure	0.05 MPa
Cushion	Rubber bumper, Air cushion
Relief port size	M5 x 0.8
Piston speed	30 to 400 mm/s
Mounting	Basic style, Axial foot style, Rod side flange style, Head side flange style, Boss-cut style

∗ Auto switch can be mounted.

Construction

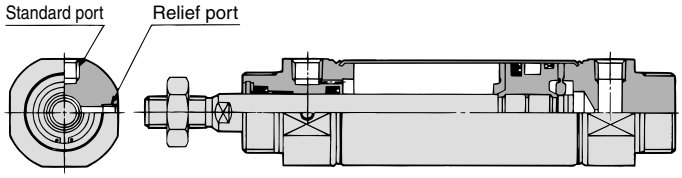

ø20, ø25

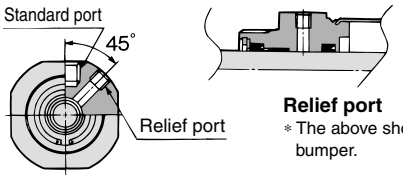

Relief port
∗ The above shows the case of rubber bumper.

ø32, ø40

For details, refer to the separate catalog, "Pneumatic Clean Series".

Copper/Fluorine-free

20-CM2 | Mounting style | Bore size | Stroke

- **Copper/fluorine-free**

The type which prevents copper based ions from generating by changing the copper based materials into electroless nickel plated treatment or non-copper materials in order to eliminate the effects by copper based ions or fluororesins over the color cathode ray tube.



Specifications

Action	Double acting, Single rod	
Bore size (mm)	ø20, ø25, ø32, ø40	
Max. operating pressure	1.0 MPa	
Min. operating pressure	0.05 MPa	
Cushion	Rubber bumper	Air cushion
Piston speed	50 to 750 mm/s	50 to 1000 mm/s
Mounting	Basic style, Axial foot style, Rod side flange style, Head side flange style, Single clevis style, Double clevis style, Rod side trunnion style, Head side trunnion style, Clevis integrated style, Boss-cut style	

∗ Auto switch can be mounted.

Construction

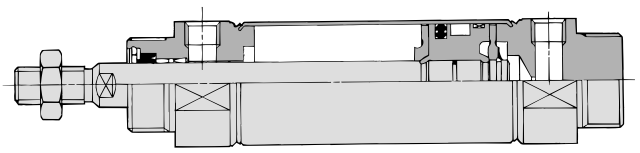

Water Resistant

CDM2 | Mounting style | Bore size | Port thread type | R | - | Stroke | A | - | H7BAL | -XC6

- With auto switch (Built-in magnet)
- Water resistant cylinder

R	NBR seals (Nitrile rubber)
V	FKM seals (Fluororubber)

- Cushion

Nil	Rubber bumper
A	Air cushion

- Water resistant 2-color indication solid state auto switch
- Made to Order

Ideal for use in a machine tool environment exposed to coolant mist.
Also suited for use in areas in which water splashes, such as food processing equipment or car washers.



⚠ Caution

Rod seal and scraper is not replaceable.
• Scraper is press-fit into the rod cover, thus cannot be replaced.

Details → Page 895

Specifications

Action	Double acting, Single rod
Bore size (mm)	20, 25, 32, 40
Cushion	Rubber bumper, Air cushion
Auto switch mounting	Band mounting
Made to Order	Piston rod, Rod end nut made of stainless steel (-XC6)

∗ Specifications other than the above are the same as the standard basic type.

Dimensions

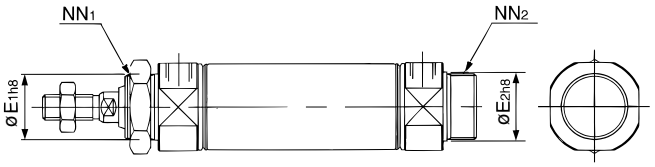

Bore size (mm)	E_1	E_2 ∗	NN_1	NN_2 ∗
20	$22^{0}_{-0.033}$	$20^{0}_{-0.033}$	M22 x 1.5	M20 x 1.5

∗ Other dimensions are the same as double acting, single rod, standard type. (∗: Same as the standard.)

Mounting Bracket/Part No.

Mounting bracket	Min. order	Bore size (mm)	Description (for min. order)
		20	
Axial foot ∗∗	2	CM-L020C	2 foot, 1 mounting nut
Flange	1	CM-F020C	1 flange
Trunnion (with nuts)	1	CM-T020C	1 trunnion, 1 trunnion nut

∗ ø25 to ø40: Same as the standard type
∗∗ Order 2 foot brackets for every cylinder.

Low-speed Cylinder

CM2 X | Mounting style | Bore size | — | Stroke

- Low-speed Cylinder

Smooth operation with a little sticking and slipping at low speed. Can start smoothly with a little ejection even after being rendered for hours.



The dimensions are the same as the double acting, single rod type.
Refer to Best Pneumatics No. 3 for details.

Specifications

Bore size (mm)	**20, 25, 32, 40**
Type	Pneumatic
Action	Double acting, Single rod
Fluid	Air
Proof pressure	1.5 MPa
Max. operating pressure	1.0 MPa
Min. operating pressure	0.025 MPa
Ambient and fluid temperature	Without auto switch: –10 to 70°C (No freezing) With auto switch: –10 to 60°C (No freezing)
Cushion	Rubber bumper

Piston Speed

Bore size (mm)	**20**	**25**	**32**	**40**
Piston speed (mm/s)	0.5 to 300			
Allowable kinetic energy (J)	0.27	0.4	0.65	1.2

Refer to Best Pneumatics No. 3 for details.

Rubber bumper

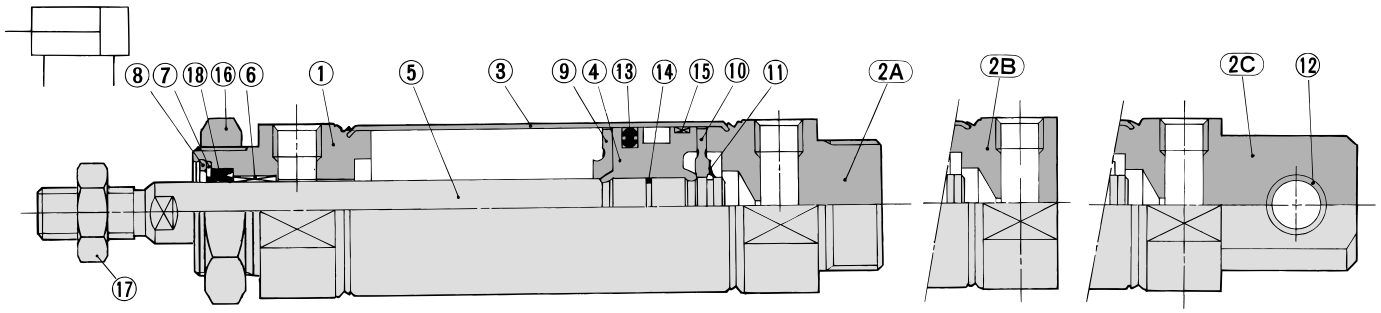

Boss-cut style Clevis integrated style

Air-hydro

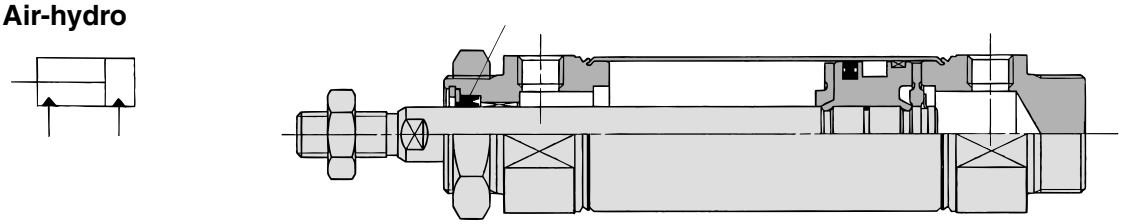

With air cushion

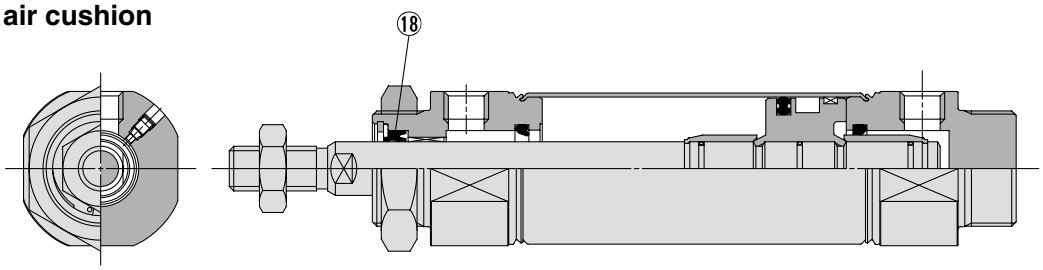

Built-in One-touch fittings

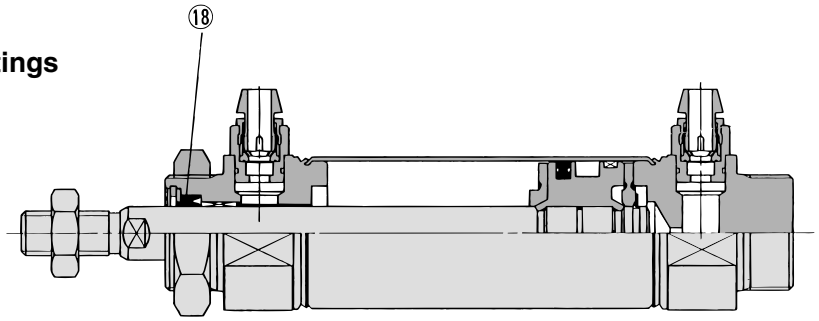

Component Parts

No.	Description	Material	Note
1	**Rod cover**	Aluminum alloy	Clear anodized
2A	**Head cover A**	Aluminum alloy	Clear anodized *
2B	**Head cover B**	Aluminum alloy	Clear anodized **
2C	**Head cover C**	Aluminum alloy	Clear anodized ***
3	**Cylinder tube**	Stainless steel	
4	**Piston**	Aluminum alloy	Chromated
5	**Piston rod**	Carbon steel	Hard chrome plated
6	**Bushing**	Copper oil-impregnated sintered alloy	
7	**Seal retainer**	Stainless steel	
8	**Retaining ring**	Carbon steel	Phosphate coated
9	**Bumper A**	Urethane	
10	**Bumper B**	Urethane	
11	**Retaining ring**	Stainless steel	

∗ Basic style, ∗∗ Boss-cut style, ∗∗∗ Clevis integrated style

No.	Description	Material	Note
12	**Clevis bushing**	Copper oil-impregnated sintered alloy	
13	**Piston seal**	NBR	
14	**Piston gasket**	NBR	
15	**Wear ring**	Resin	
16	**Mounting nut**	Carbon steel	Nickel plated
17	**Rod end nut**	Carbon steel	Nickel plated

Replacement Part: Seal

● With rubber bumper/With air cushion/Built-in One-touch fittings

No.	Description	Material	Part no.			
			20	**25**	**32**	**40**
18	**Rod seal**	NBR	PDU-8Z	PDU-10Z	PDU-12LZ	PDU-14LZ
● Air-hydro						
18	**Rod seal**	NBR	HDU-8	HDU-10	HDU-12L	HDU-14

∗ Since the seal kit does not include a grease pack, order it separately.
Grease pack part no.: GR-S-010 (10 g)

Basic Style (B)

CM2B Bore size — Stroke

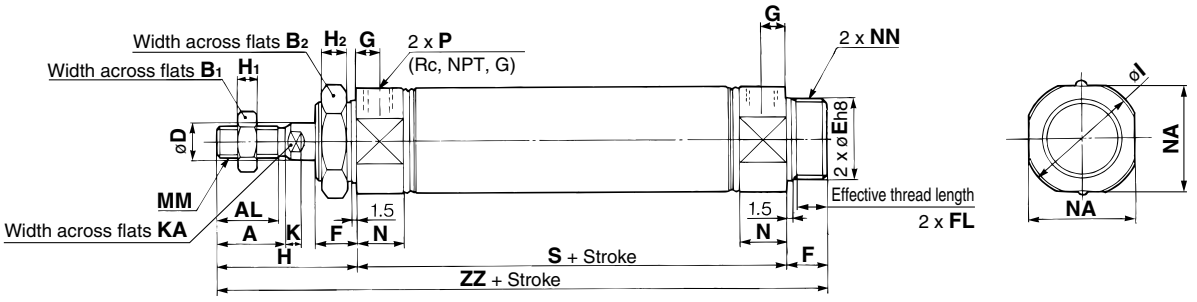

With rod boot

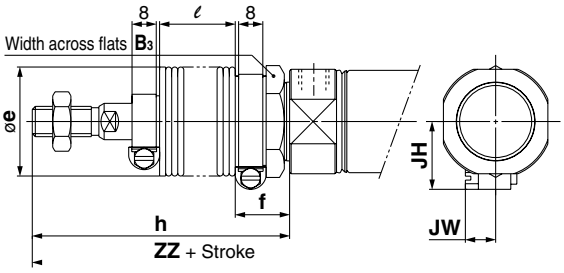

With air cushion

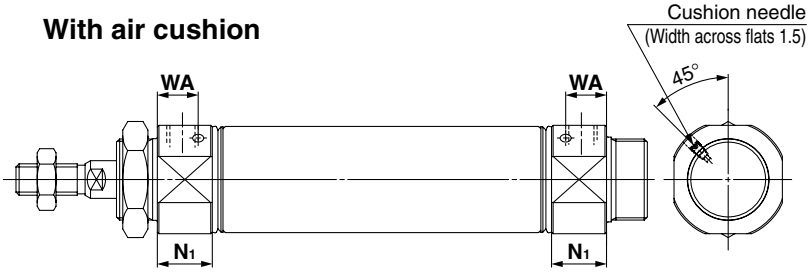

Boss-cut style

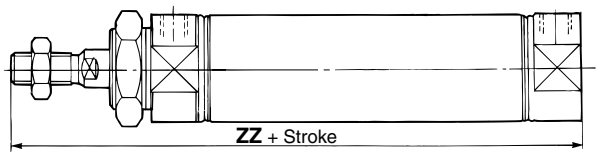

Built-in One-touch fittings

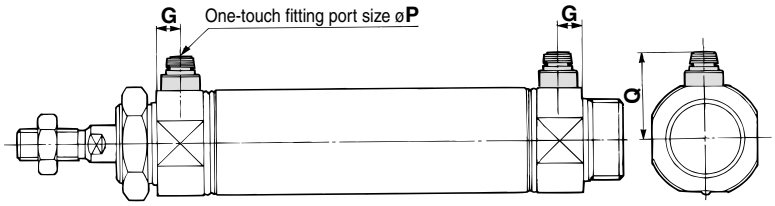

(mm)

Bore size	A	AL	B1	B2	D	E	F	FL	G	H	H1	H2	I	K	KA	MM	N	NA	NN	P	S	ZZ
20	18	15.5	13	26	8	$20^{0}_{-0.033}$	13	10.5	8	41	5	8	28	5	6	M8 x 1.25	15	24	M20 x 1.5	1/8	62	116
25	22	19.5	17	32	10	$26^{0}_{-0.033}$	13	10.5	8	45	6	8	33.5	5.5	8	M10 x 1.25	15	30	M26 x 1.5	1/8	62	120
32	22	19.5	17	32	12	$26^{0}_{-0.033}$	13	10.5	8	45	6	8	37.5	5.5	10	M10 x 1.25	15	34.5	M26 x 1.5	1/8	64	122
40	24	21	22	41	14	$32^{0}_{-0.039}$	16	13.5	11	50	8	10	46.5	7	12	M14 x 1.5	21.5	42.5	M32 x 2	1/4	88	154

With Rod Boot

(mm)

Bore size \ Symbol / Stroke	B3	e	f	h							ℓ							ZZ						
				1 to 50	51 to 100	101 to 150	151 to 200	201 to 300	301 to 400	401 to 500	1 to 50	51 to 100	101 to 150	151 to 200	201 to 300	301 to 400	401 to 500	1 to 50	51 to 100	101 to 150	151 to 200	201 to 300	301 to 400	401 to 500
20	30	36	18	68	81	93	106	131	156	181	12.5	25	37.5	50	75	100	125	143	156	168	181	206	231	256
25	32	36	18	72	85	97	110	135	160	185	12.5	25	37.5	50	75	100	125	147	160	172	185	210	235	260
32	32	36	18	72	85	97	110	135	160	185	12.5	25	37.5	50	75	100	125	149	162	174	187	212	237	262
40	41	46	20	77	90	102	115	140	165	190	12.5	25	37.5	50	75	100	125	181	194	206	219	244	269	294

With Rod Boot (mm)

Bore size	JH	JW
20	23.5	10.5
25	23.5	10.5
32	23.5	10.5
40	27	10.5

Boss-cut Style

(mm)

Bore size	ZZ							
	Without rod boot	With rod boot						
		1 to 50	51 to 100	101 to 150	151 to 200	201 to 300	301 to 400	401 to 500
20	103	130	143	155	168	193	218	243
25	107	134	147	159	172	197	222	247
32	109	136	149	161	174	199	224	249
40	138	165	178	190	203	228	253	278

With Air Cushion (mm)

Bore size	N1	WA
20	17.5	13
25	17.5	13
32	17.5	13
40	21.5	16

Built-in One-touch Fittings (mm)

Bore size	G	P	Q
20	8	6	21.5
25	8	6	24.5
32	8	6	27
40	11	8	32.5

Axial Foot Style (L)

CM2L Bore size — Stroke

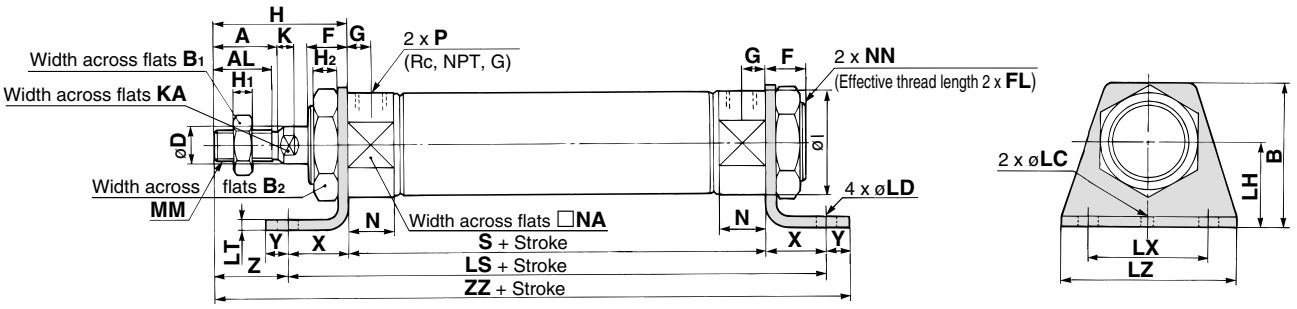

With rod boot

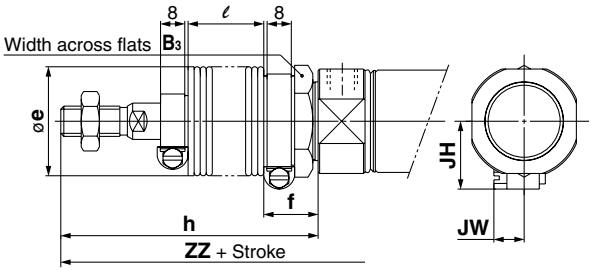

With air cushion

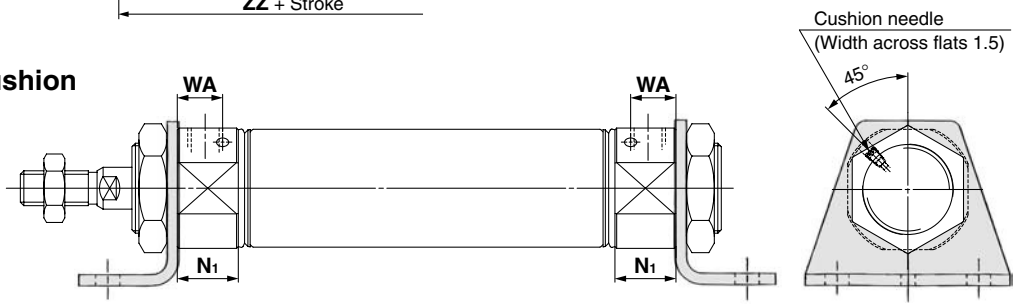

Built-in One-touch fittings

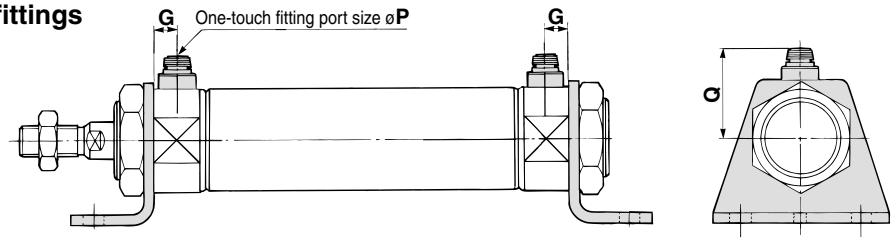

(mm)

Bore size	A	AL	B	B1	B2	D	F	FL	G	H	H1	H2	I	K	KA	LC	LD	LH	LS	LT	LX	LZ	MM	N	NA	NN	P	S	X	Y	Z	ZZ
20	18	15.5	40	13	26	8	13	10.5	8	41	5	8	28	5	6	4	6.8	25	102	3.2	40	55	M8 x 1.25	15	24	M20 x 1.5	1/8	62	20	8	21	131
25	22	19.5	47	17	32	10	13	10.5	8	45	6	8	33.5	5.5	8	4	6.8	28	102	3.2	40	55	M10 x 1.25	15	30	M26 x 1.5	1/8	62	20	8	25	135
32	22	19.5	47	17	32	12	13	10.5	8	45	6	8	37.5	5.5	10	4	6.8	28	104	3.2	40	55	M10 x 1.25	15	34.5	M26 x 1.5	1/8	64	20	8	25	137
40	24	21	54	22	41	14	16	13.5	11	50	8	10	46.5	7	12	4	7	30	134	3.2	55	75	M14 x 1.5	21.5	42.5	M32 x 2	1/4	88	23	10	27	171

With Rod Boot

(mm)

Bore size \ Symbol / Stroke	B3	e	f	h							ℓ							Z						
				1 to 50	51 to 100	101 to 150	151 to 200	201 to 300	301 to 400	401 to 500	1 to 50	51 to 100	101 to 150	151 to 200	201 to 300	301 to 400	401 to 500	1 to 50	51 to 100	101 to 150	151 to 200	201 to 300	301 to 400	401 to 500
20	30	36	19.2	68	81	93	106	131	156	181	12.5	25	37.5	50	75	100	125	48	61	73	86	111	136	161
25	32	36	19.2	72	85	97	110	135	160	185	12.5	25	37.5	50	75	100	125	52	65	77	90	115	140	165
32	32	36	19.2	72	85	97	110	135	160	185	12.5	25	37.5	50	75	100	125	52	65	77	90	115	140	165
40	41	46	21.2	77	90	102	115	140	165	190	12.5	25	37.5	50	75	100	125	54	67	79	92	117	142	167

With Rod Boot

(mm)

Bore size \ Symbol / Stroke	ZZ							JH	JW
	1 to 50	51 to 100	101 to 150	151 to 200	201 to 300	301 to 400	401 to 500		
20	158	171	183	196	221	246	271	23.5	10.5
25	162	175	187	200	225	250	275	23.5	10.5
32	164	177	189	202	227	252	277	23.5	10.5
40	198	211	223	236	261	286	311	27	10.5

With Air Cushion

(mm)

Bore size	N1	WA
20	17.5	13
25	17.5	13
32	17.5	13
40	21.5	16

Built-in One-touch Fittings

(mm)

Bore size	G	P	Q
20	8	6	21.5
25	8	6	24.5
32	8	6	27
40	11	8	32.5

Rod Side Flange Style (F)

CM2F Bore size — Stroke

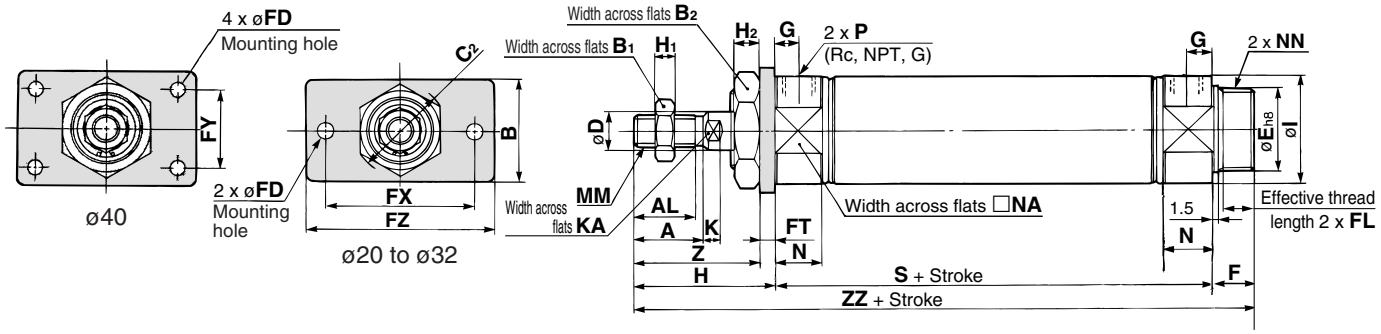

With rod boot

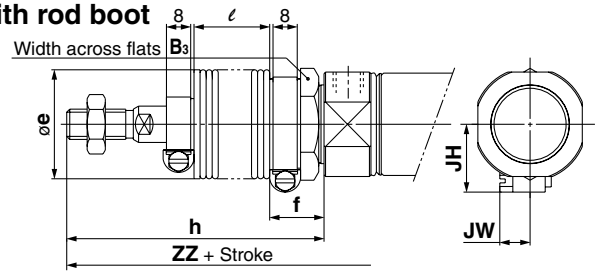

Boss-cut style

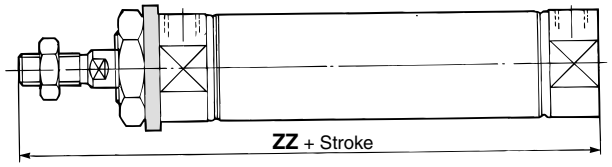

With air cushion

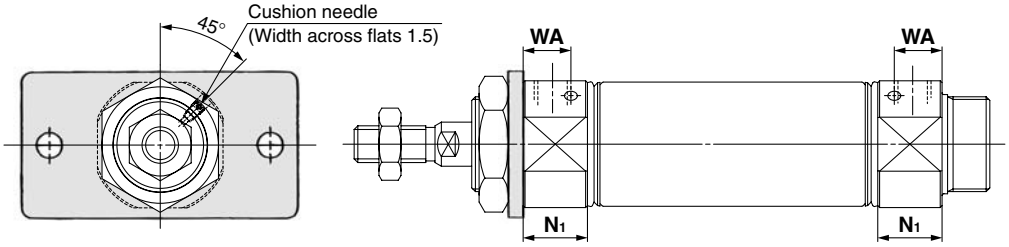

Built-in One-touch fittings

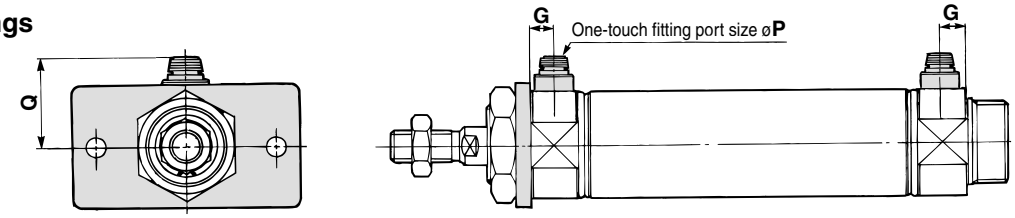

(mm)

Bore size	A	AL	B	B1	B2	C2	D	E	F	FL	FD	FT	FX	FY	FZ	G	H	H1	H2	I	K	KA	MM	N	NA	NN	P	S	Z	ZZ
20	18	15.5	34	13	26	30	8	$20^{0}_{-0.033}$	13	10.5	7	4	60	—	75	8	41	5	8	28	5	6	M8 x 1.25	15	24	M20 x 1.5	1/8	62	37	116
25	22	19.5	40	17	32	37	10	$26^{0}_{-0.033}$	13	10.5	7	4	60	—	75	8	45	6	8	33.5	5.5	8	M10 x 1.25	15	30	M26 x 1.5	1/8	62	41	120
32	22	19.5	40	17	32	37	12	$26^{0}_{-0.033}$	13	10.5	7	4	60	—	75	8	45	6	8	37.5	5.5	10	M10 x 1.25	15	34.5	M26 x 1.5	1/8	64	41	122
40	24	21	52	22	41	47.3	14	$32^{0}_{-0.039}$	16	13.5	7	5	66	36	82	11	50	8	10	46.5	7	12	M14 x 1.5	21.5	42.5	M32 x 2	1/4	88	45	154

With Rod Boot

(mm)

Bore size \ Symbol / Stroke	B3	e	f	h							ℓ								ZZ							
				1 to 50	51 to 100	101 to 150	151 to 200	201 to 300	301 to 400	401 to 500	1 to 50	51 to 100	101 to 150	151 to 200	201 to 300	301 to 400	401 to 500	1 to 50	51 to 100	101 to 150	151 to 200	201 to 300	301 to 400	401 to 500
20	30	36	20	68	81	93	106	131	156	181	12.5	25	37.5	50	75	100	125	143	156	168	181	206	231	256
25	32	36	20	72	85	97	110	135	160	185	12.5	25	37.5	50	75	100	125	147	160	172	185	210	235	260
32	32	36	20	72	85	97	110	135	160	185	12.5	25	37.5	50	75	100	125	149	162	174	187	212	237	262
40	41	46	23	77	90	102	115	140	165	190	12.5	25	37.5	50	75	100	125	181	194	206	219	244	269	294

With Rod Boot (mm)

Bore size	JH	JW
20	23.5	10.5
25	23.5	10.5
32	23.5	10.5
40	27	10.5

Boss-cut Style

(mm)

Bore size	ZZ							
	Without rod boot	With rod boot						
		1 to 50	51 to 100	101 to 150	151 to 200	201 to 300	301 to 400	401 to 500
20	103	130	143	155	168	193	218	243
25	107	134	147	159	172	197	222	247
32	109	136	149	161	174	199	224	249
40	138	165	178	190	203	228	253	278

With Air Cushion (mm)

Bore size	N1	WA
20	17.5	13
25	17.5	13
32	17.5	13
40	21.5	16

Built-in One-touch Fittings (mm)

Bore size	G	P	Q
20	8	6	21.5
25	8	6	24.5
32	8	6	27
40	11	8	32.5

Head Side Flange Style (G)

CM2G Bore size — Stroke

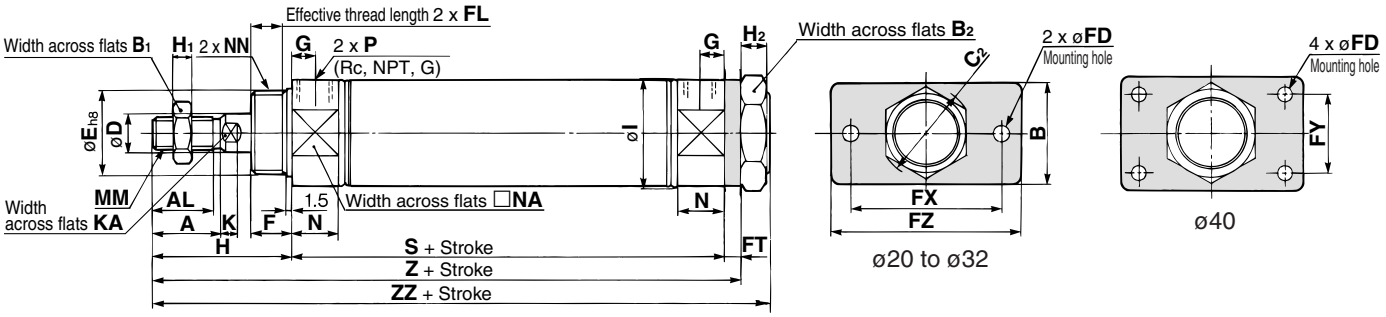

With rod boot

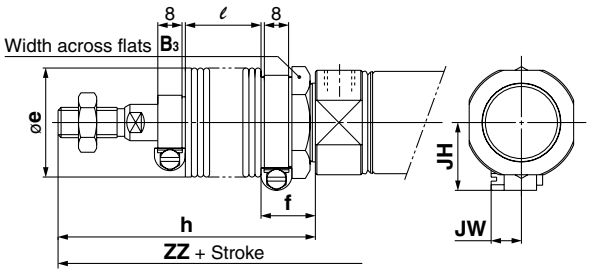

With air cushion

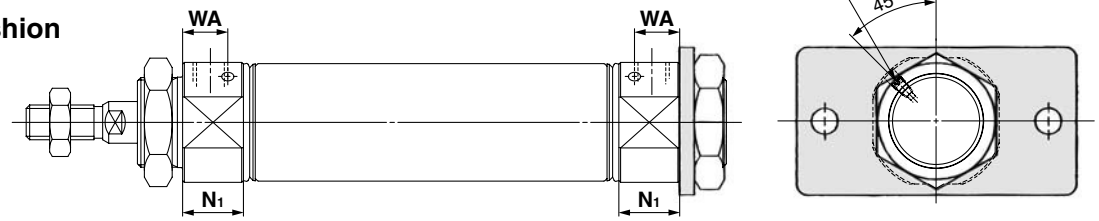

Built-in One-touch fittings

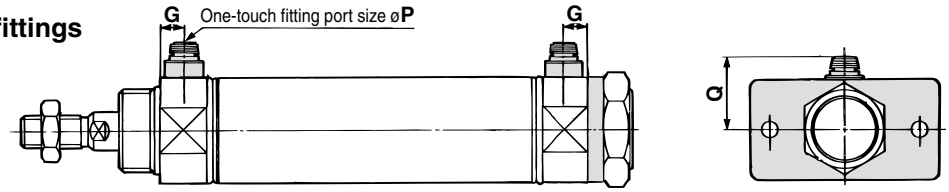

(mm)

Bore size	A	AL	B	B1	B2	C2	D	E	F	FL	FD	FT	FX	FY	FZ	G	H	H1	H2	I
20	18	15.5	34	13	26	30	8	$20^{0}_{-0.033}$	13	10.5	7	4	60	—	75	8	41	5	8	28
25	22	19.5	40	17	32	37	10	$26^{0}_{-0.033}$	13	10.5	7	4	60	—	75	8	45	6	8	33.5
32	22	19.5	40	17	32	37	12	$26^{0}_{-0.033}$	13	10.5	7	4	60	—	75	8	45	6	8	37.5
40	24	21	52	22	41	47.3	14	$32^{0}_{-0.039}$	16	13.5	7	5	66	36	82	11	50	8	10	46.5

(mm)

Bore size	K	KA	MM	N	NA	NN	P	S	Z	ZZ
20	5	6	M8 x 1.25	15	24	M20 x 1.5	1/8	62	107	116
25	5.5	8	M10 x 1.25	15	30	M26 x 1.5	1/8	62	111	120
32	5.5	10	M10 x 1.25	15	34.5	M26 x 1.5	1/8	64	113	122
40	7	12	M14 x 1.5	21.5	42.5	M32 x 2	1/4	88	143	154

With Air Cushion (mm)

Bore size	N1	WA
20	17.5	13
25	17.5	13
32	17.5	13
40	21.5	16

Built-in One-touch Fittings (mm)

Bore size	G	P	Q
20	8	6	21.5
25	8	6	24.5
32	8	6	27
40	11	8	32.5

With Rod Boot

(mm)

Bore size \ Symbol / Stroke	B3	e	f	h							ℓ								ZZ						
				1 to 50	51 to 100	101 to 150	151 to 200	201 to 300	301 to 400	401 to 500	1 to 50	51 to 100	101 to 150	151 to 200	201 to 300	301 to 400	401 to 500	1 to 50	51 to 100	101 to 150	151 to 200	201 to 300	301 to 400	401 to 500
20	30	36	18	68	81	93	106	131	156	181	12.5	25	37.5	50	75	100	125	143	156	168	181	206	231	256
25	32	36	18	72	85	97	110	135	160	185	12.5	25	37.5	50	75	100	125	147	160	172	185	210	235	260
32	32	36	18	72	85	97	110	135	160	185	12.5	25	37.5	50	75	100	125	149	162	174	187	212	237	262
40	41	46	20	77	90	102	115	140	165	190	12.5	25	37.5	50	75	100	125	181	194	206	219	244	269	294

With Rod Boot (mm)

Bore size	JH	JW
20	23.5	10.5
25	23.5	10.5
32	23.5	10.5
40	27	10.5

Single Clevis Style (C)

CM2C Bore size — Stroke

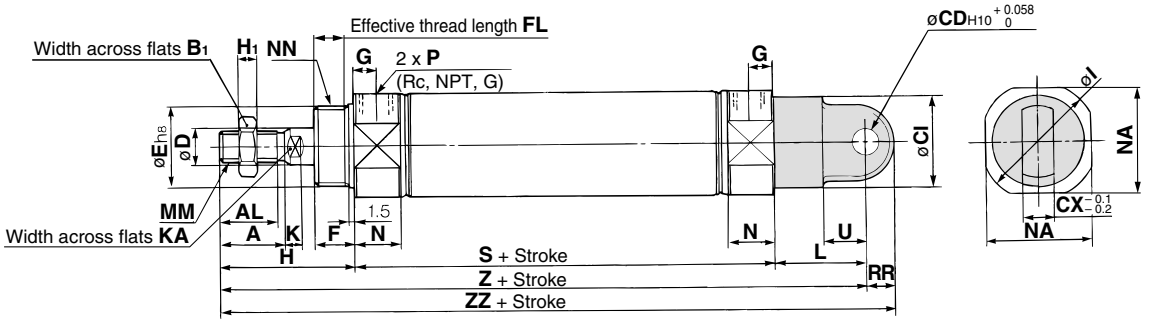

With rod boot

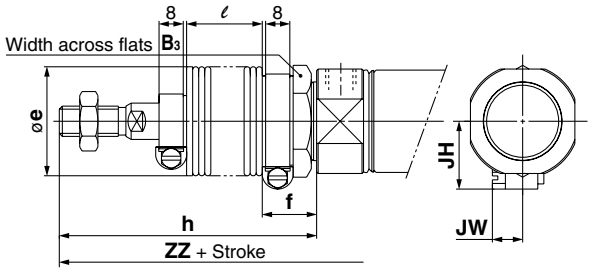

With air cushion

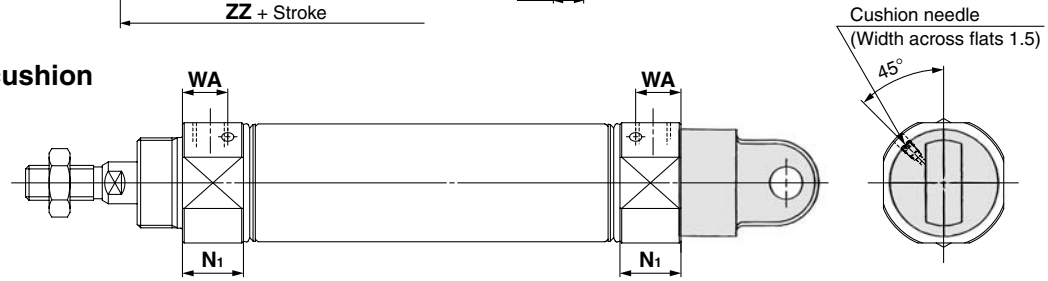

Built-in One-touch fittings

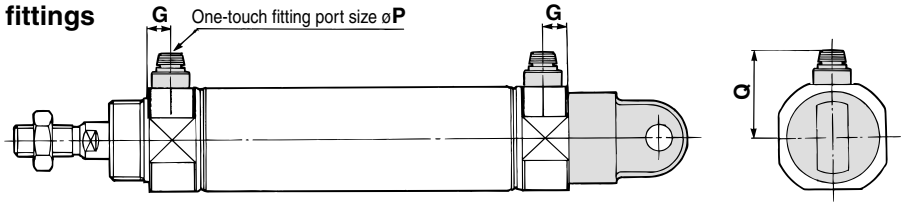

(mm)

Bore size	A	AL	B1	CI	CD	CX	D	E	F	FL	G	H	H1	I	K	KA	L	MM	N	NA	NN	P	RR	S	U	Z	ZZ
20	18	15.5	13	24	9	10	8	20 -0.033 0	13	10.5	8	41	5	28	5	6	30	M8 x 1.25	15	24	M20 x 1.5	1/8	9	62	14	133	142
25	22	19.5	17	30	9	10	10	26 -0.033 0	13	10.5	8	45	6	33.5	5.5	8	30	M10 x 1.25	15	30	M26 x 1.5	1/8	9	62	14	137	146
32	22	19.5	17	30	9	10	12	26 -0.033 0	13	10.5	8	45	6	37.5	5.5	10	30	M10 x 1.25	15	34.5	M26 x 1.5	1/8	9	64	14	139	148
40	24	21	22	38	10	15	14	32 -0.039 0	16	13.5	11	50	8	46.5	7	12	39	M14 x 1.5	21.5	42.5	M32 x 2	1/4	11	88	18	177	188

With Rod Boot

(mm)

Bore size \ Symbol / Stroke	B3	e	f	h							ℓ								Z							
				1 to 50	51 to 100	101 to 150	151 to 200	201 to 300	301 to 400	401 to 500	1 to 50	51 to 100	101 to 150	151 to 200	201 to 300	301 to 400	401 to 500	1 to 50	51 to 100	101 to 150	151 to 200	201 to 300	301 to 400	401 to 500
20	30	36	18	68	81	93	106	131	156	181	12.5	25	37.5	50	75	100	125	160	173	185	198	223	248	273
25	32	36	18	72	85	97	110	135	160	185	12.5	25	37.5	50	75	100	125	164	177	189	202	227	252	277
32	32	36	18	72	85	97	110	135	160	185	12.5	25	37.5	50	75	100	125	166	179	191	204	229	254	279
40	41	46	20	77	90	102	115	140	165	190	12.5	25	37.5	50	75	100	125	204	217	229	242	267	292	317

With Rod Boot

(mm)

Bore size \ Symbol / Stroke	ZZ							JH	JW
	1 to 50	51 to 100	101 to 150	151 to 200	201 to 300	301 to 400	401 to 500		
20	169	182	194	207	232	257	282	23.5	10.5
25	173	186	198	211	236	261	286	23.5	10.5
32	175	188	200	213	238	263	288	23.5	10.5
40	215	228	240	253	278	303	328	27	10.5

With Air Cushion

(mm)

Bore size	N1	WA
20	17.5	13
25	17.5	13
32	17.5	13
40	21.5	16

Built-in One-touch Fittings

(mm)

Bore size	G	P	Q
20	8	6	21.5
25	8	6	24.5
32	8	6	27
40	11	8	32.5

Double Clevis Style (D)

CM2D Bore size — Stroke

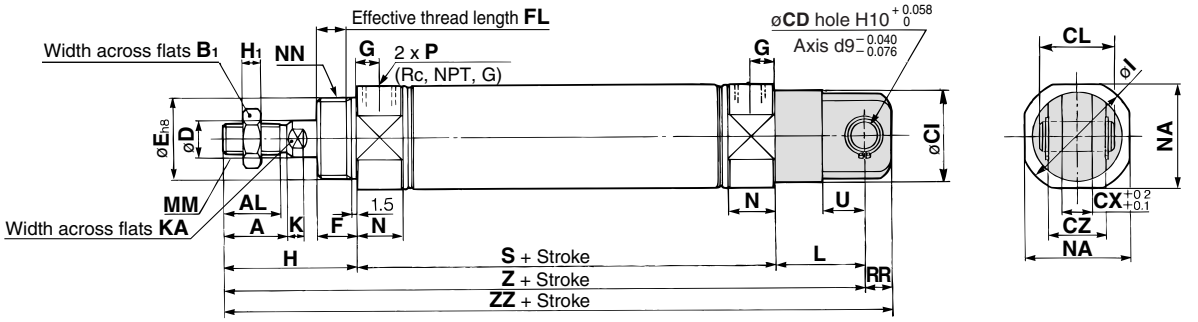

With rod boot

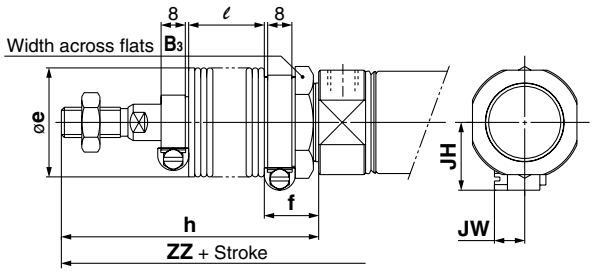

With air cushion

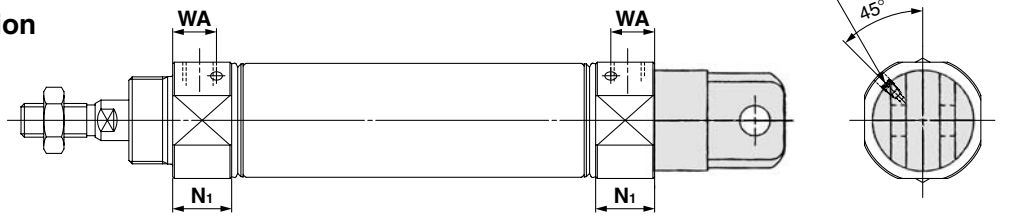

Built-in One-touch fittings

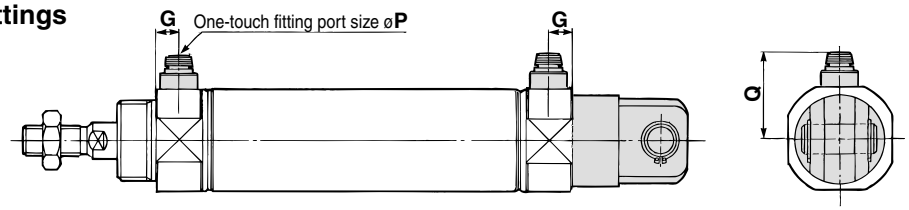

(mm)

Bore size	A	AL	B1	CD	CI	CL	CX	CZ	D	E	F	FL	G	H	H1	I	K	KA	L	MM	N	NA	NN	P	RR	S	U	Z	ZZ
20	18	15.5	13	9	24	25	10	19	8	20 −0.033 0	13	10.5	8	41	5	28	5	6	30	M8 x 1.25	15	24	M20 x 1.5	1/8	9	62	14	133	142
25	22	19.5	17	9	30	25	10	19	10	26 −0.033 0	13	10.5	8	45	6	33.5	5.5	8	30	M10 x 1.25	15	30	M26 x 1.5	1/8	9	62	14	137	146
32	22	19.5	17	9	30	25	10	19	12	26 −0.033 0	13	10.5	8	45	6	37.5	5.5	10	30	M10 x 1.25	15	34.5	M26 x 1.5	1/8	9	64	14	139	148
40	24	21	22	10	38	41.2	15	30	14	32 −0.039 0	16	13.5	11	50	8	46.5	7	12	39	M14 x 1.5	21.5	42.5	M32 x 2	1/4	11	88	18	177	188

∗ Clevis pin and snap ring (cotter pin for bore size ø40) are shipped together.

With Rod Boot

(mm)

Bore size \ Symbol / Stroke	B3	e	f	h							ℓ								Z							
				1 to 50	51 to 100	101 to 150	151 to 200	201 to 300	301 to 400	401 to 500	1 to 50	51 to 100	101 to 150	151 to 200	201 to 300	301 to 400	401 to 500	1 to 50	51 to 100	101 to 150	151 to 200	201 to 300	301 to 400	401 to 500
20	30	36	18	68	81	93	106	131	156	181	12.5	25	37.5	50	75	100	125	160	173	185	198	223	248	273
25	32	36	18	72	85	97	110	135	160	185	12.5	25	37.5	50	75	100	125	164	177	189	202	227	252	277
32	32	36	18	72	85	97	110	135	160	185	12.5	25	37.5	50	75	100	125	166	179	191	204	229	254	279
40	41	46	20	77	90	102	115	140	165	190	12.5	25	37.5	50	75	100	125	204	217	229	242	267	292	317

With Rod Boot

(mm)

Bore size \ Symbol / Stroke	ZZ							JH	JW
	1 to 50	51 to 100	101 to 150	151 to 200	201 to 300	301 to 400	401 to 500		
20	169	182	194	207	232	257	282	23.5	10.5
25	173	186	198	211	236	261	286	23.5	10.5
32	175	188	200	213	238	263	288	23.5	10.5
40	215	228	240	253	278	303	328	27	10.5

With Air Cushion

(mm)

Bore size	N1	WA
20	17.5	13
25	17.5	13
32	17.5	13
40	21.5	16

Built-in One-touch Fittings

(mm)

Bore size	G	P	Q
20	8	6	21.5
25	8	6	24.5
32	8	6	27
40	11	8	32.5

Rod Side Trunnion Style (U)

CM2U Bore size — Stroke

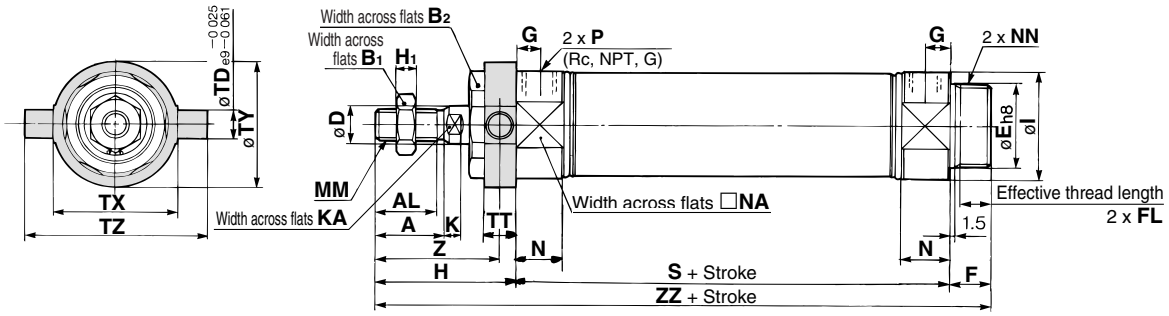

With rod boot

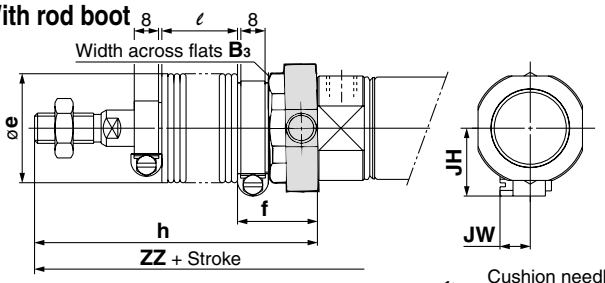

Boss-cut style

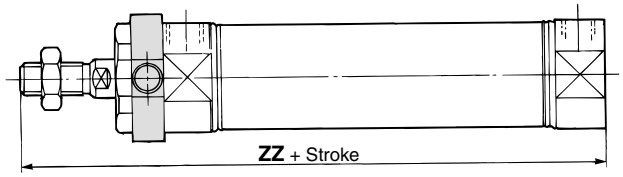

With air cushion

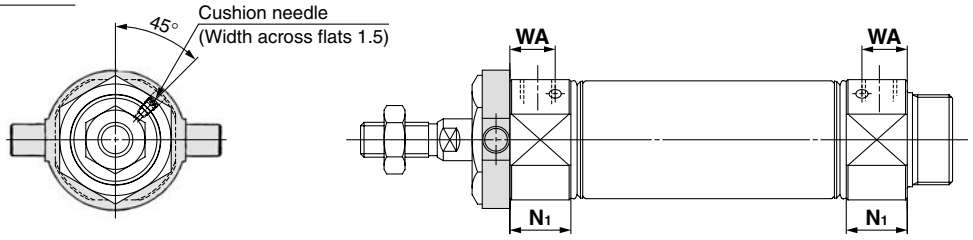

Built-in One-touch fittings

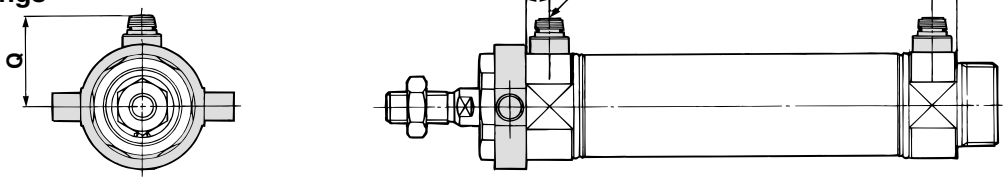

(mm)

Bore size	A	AL	B_1	B_2	D	E	F	FL	G	H	H_1	I	K	KA	MM	N	NA	NN	P
20	18	15.5	13	26	8	$20^{0}_{-0.033}$	13	10.5	8	41	5	28	5	6	M8 x 1.25	15	24	M20 x 1.5	1/8
25	22	19.5	17	32	10	$26^{0}_{-0.033}$	13	10.5	8	45	6	33.5	5.5	8	M10 x 1.25	15	30	M26 x 1.5	1/8
32	22	19.5	17	32	12	$26^{0}_{-0.033}$	13	10.5	8	45	6	37.5	5.5	10	M10 x 1.25	15	34.5	M26 x 1.5	1/8
40	24	21	22	41	14	$32^{0}_{-0.039}$	16	13.5	11	50	8	46.5	7	12	M14 x 1.5	21.5	42.5	M32 x 2	1/4

(mm)

Bore size	S	TD	TT	TX	TY	TZ	Z	ZZ
20	62	8	10	32	32	52	36	116
25	62	9	10	40	40	60	40	120
32	64	9	10	40	40	60	40	122
40	88	10	11	53	53	77	44.5	154

With Rod Boot

(mm)

Bore size \ Symbol / Stroke	B_3	e	f	h						
				1 to 50	51 to 100	101 to 150	151 to 200	201 to 300	301 to 400	401 to 500
20	30	36	25	68	81	93	106	131	156	181
25	32	36	25	72	85	97	110	135	160	185
32	32	36	25	72	85	97	110	135	160	185
40	41	46	26	77	90	102	115	140	165	190

With Rod Boot

(mm)

Bore size \ Symbol / Stroke	ℓ							Z							ZZ							JH	JW
	1 to 50	51 to 100	101 to 150	151 to 200	201 to 300	301 to 400	401 to 500	1 to 50	51 to 100	101 to 150	151 to 200	201 to 300	301 to 400	401 to 500	1 to 50	51 to 100	101 to 150	151 to 200	201 to 300	301 to 400	401 to 500		
20	12.5	25	37.5	50	75	100	125	63	76	88	101	126	151	176	143	156	168	181	206	231	256	23.5	10.5
25	12.5	25	37.5	50	75	100	125	67	80	92	105	130	155	180	147	160	172	185	210	235	260	23.5	10.5
32	12.5	25	37.5	50	75	100	125	67	80	92	105	130	155	180	149	162	174	187	212	237	262	23.5	10.5
40	12.5	25	37.5	50	75	100	125	71.5	84.5	96.5	109.5	134.5	159.5	184.5	181	194	206	219	244	269	294	27	10.5

Boss-cut Style

(mm)

Bore size	ZZ							
	Without rod boot	With rod boot						
		1 to 50	51 to 100	101 to 150	151 to 200	201 to 300	301 to 400	401 to 500
20	103	130	143	155	168	193	218	243
25	107	134	147	159	172	197	222	247
32	109	136	149	161	174	199	224	249
40	138	165	178	190	203	228	253	278

With Air Cushion

(mm)

Bore size	N_1	WA
20	17.5	13
25	17.5	13
32	17.5	13
40	21.5	16

Built-in One-touch Fittings

(mm)

Bore size	G	P	Q
20	8	6	21.5
25	8	6	24.5
32	8	6	27
40	11	8	32.5

Head Side Trunnion Style (T)

CM2T Bore size — Stroke

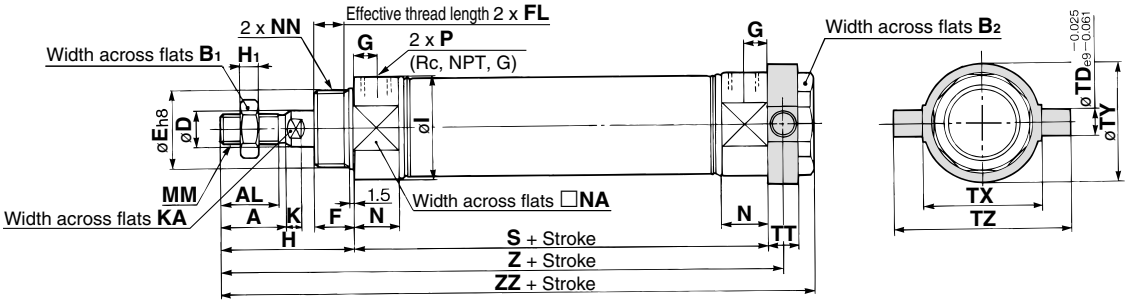

With rod boot

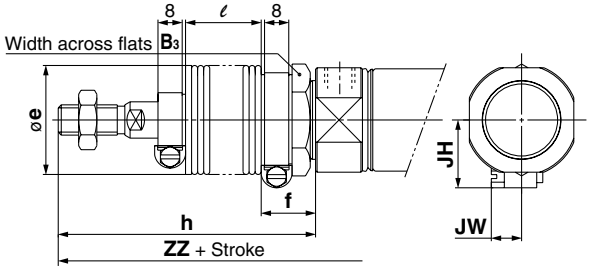

With air cushion

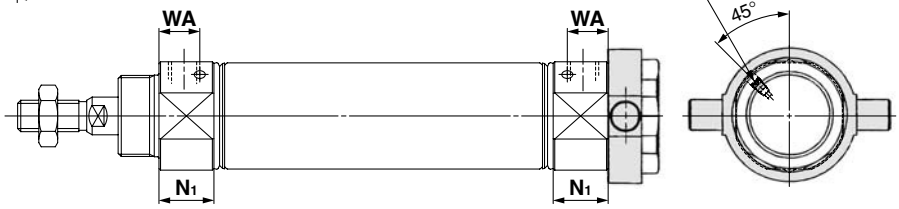

Built-in One-touch fittings

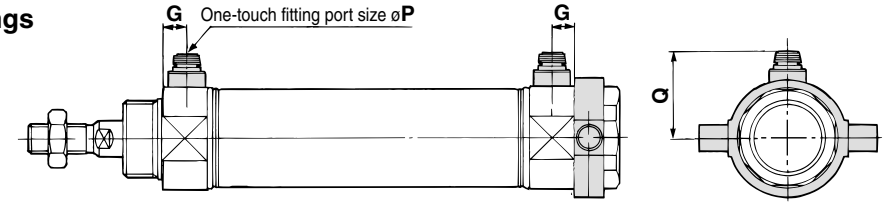

(mm)

Bore size	A	AL	B1	B2	D	E	F	FL	G	H	H1	I	K	KA	MM	N	NA	NN	P
20	18	15.5	13	26	8	$20^{0}_{-0.033}$	13	10.5	8	41	5	28	5	6	M8 x 1.25	15	24	M20 x 1.5	1/8
25	22	19.5	17	32	10	$26^{0}_{-0.033}$	13	10.5	8	45	6	33.5	5.5	8	M10 x 1.25	15	30	M26 x 1.5	1/8
32	22	19.5	17	32	12	$26^{0}_{-0.033}$	13	10.5	8	45	6	37.5	5.5	10	M10 x 1.25	15	34.5	M26 x 1.5	1/8
40	24	21	22	41	14	$32^{0}_{-0.039}$	16	13.5	11	50	8	46.5	7	12	M14 x 1.5	21.5	42.5	M32 x 2	1/4

(mm)

Bore size	S	TD	TT	TX	TY	TZ	Z	ZZ
20	62	8	10	32	32	52	108	118
25	62	9	10	40	40	60	112	122
32	64	9	10	40	40	60	114	124
40	88	10	11	53	53	77	143.5	154

With Rod Boot

(mm)

Symbol / Stroke / Bore size	B3	e	f	h						
				1 to 50	51 to 100	101 to 150	151 to 200	201 to 300	301 to 400	401 to 500
20	30	36	18	68	81	93	106	131	156	181
25	32	36	18	72	85	97	110	135	160	185
32	32	36	18	72	85	97	110	135	160	185
40	41	46	20	77	90	102	115	140	165	190

With Rod Boot

(mm)

Symbol / Stroke / Bore size	ℓ							Z							ZZ							JH	JW
	1 to 50	51 to 100	101 to 150	151 to 200	201 to 300	301 to 400	401 to 500	1 to 50	51 to 100	101 to 150	151 to 200	201 to 300	301 to 400	401 to 500	1 to 50	51 to 100	101 to 150	151 to 200	201 to 300	301 to 400	401 to 500		
20	12.5	25	37.5	50	75	100	125	135	148	160	173	198	223	248	145	158	170	183	208	233	258	23.5	10.5
25	12.5	25	37.5	50	75	100	125	139	152	164	177	202	227	252	149	162	174	187	212	237	262	23.5	10.5
32	12.5	25	37.5	50	75	100	125	141	154	166	179	204	229	254	151	164	176	189	214	239	264	23.5	10.5
40	12.5	25	37.5	50	75	100	125	170.5	183.5	195.5	208.5	233.5	258.5	283.5	181	194	206	219	244	269	294	27	10.5

With Air Cushion

(mm)

Bore size	N1	WA
20	17.5	13
25	17.5	13
32	17.5	13
40	21.5	16

Built-in One-touch Fittings

(mm)

Bore size	G	P	Q
20	8	6	21.5
25	8	6	24.5
32	8	6	27
40	11	8	32.5

Clevis Integrated Style (E)

CM2E Bore size — Stroke

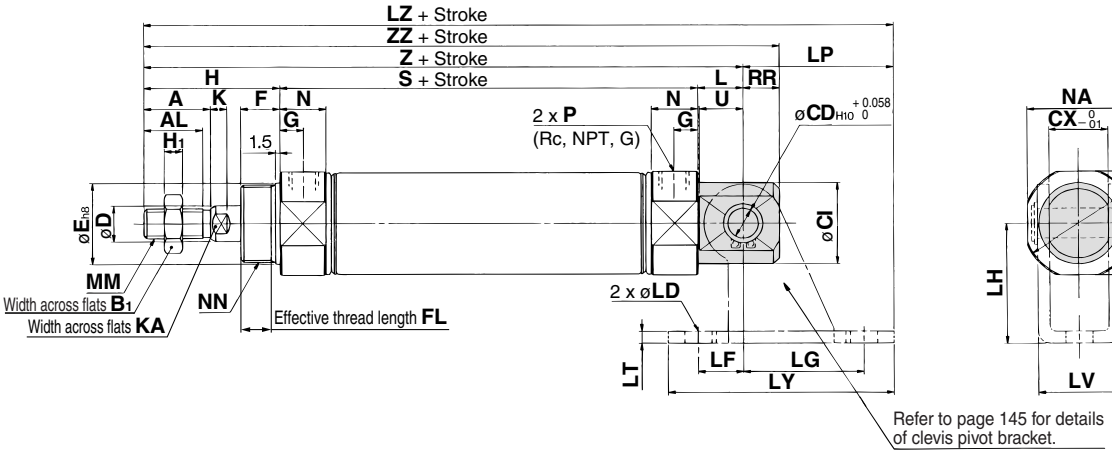

With rod boot

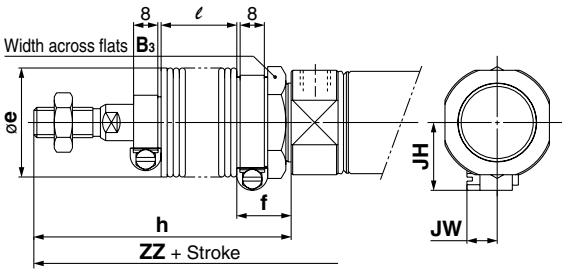

With air cushion

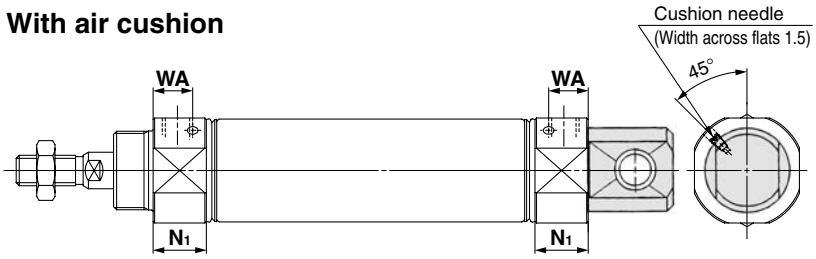

Built-in One-touch fittings

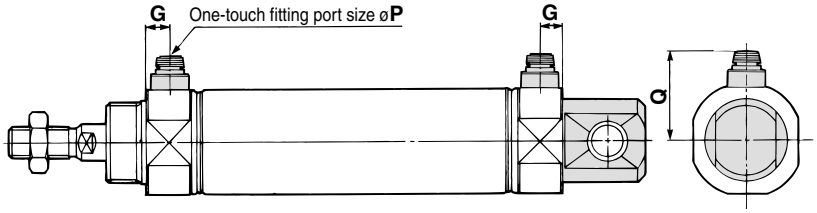

(mm)

Bore size	A	AL	B1	CD	CI	CX	D	E	F	FL	G	H	H1	I	K	KA	L	MM	N	NA	NN
20	18	15.5	13	8	20	12	8	$20^{0}_{-0.033}$	13	10.5	8	41	5	28	5	6	12	M8 x 1.25	15	24	M20 x 1.5
25	22	19.5	17	8	22	12	10	$26^{0}_{-0.033}$	13	10.5	8	45	6	33.5	5.5	8	12	M10 x 1.25	15	30	M26 x 1.5
32	22	19.5	17	10	27	20	12	$26^{0}_{-0.033}$	13	10.5	8	45	6	37.5	5.5	10	15	M10 x 1.25	15	34.5	M26 x 1.5
40	24	21	22	10	33	20	14	$32^{0}_{-0.039}$	16	13.5	11	50	8	46.5	7	12	15	M14 x 1.5	21.5	42.5	M32 x 2

(mm)

Bore size	P	RR	S	U	Z	ZZ
20	1/8	9	62	11.5	115	124
25	1/8	9	62	11.5	119	128
32	1/8	12	64	14.5	124	136
40	1/4	12	88	14.5	153	165

With Rod Boot

(mm)

Bore size \ Symbol / Stroke	B3	e	f	h						
				1 to 50	51 to 100	101 to 150	151 to 200	201 to 300	301 to 400	401 to 500
20	30	36	18	68	81	93	106	131	156	181
25	32	36	18	72	85	97	110	135	160	185
32	32	36	18	72	85	97	110	135	160	185
40	41	46	20	77	90	102	115	140	165	190

With Rod Boot

(mm)

Bore size \ Symbol / Stroke	ℓ							Z							ZZ							JH	JW
	1 to 50	51 to 100	101 to 150	151 to 200	201 to 300	301 to 400	401 to 500	1 to 50	51 to 100	101 to 150	151 to 200	201 to 300	301 to 400	401 to 500	1 to 50	51 to 100	101 to 150	151 to 200	201 to 300	301 to 400	401 to 500		
20	12.5	25	37.5	50	75	100	125	142	155	167	180	205	230	255	151	164	176	189	214	239	264	23.5	10.5
25	12.5	25	37.5	50	75	100	125	146	159	171	184	209	234	259	155	168	180	193	218	243	268	23.5	10.5
32	12.5	25	37.5	50	75	100	125	151	164	176	189	214	239	264	163	176	188	201	226	251	276	23.5	10.5
40	12.5	25	37.5	50	75	100	125	180	193	205	218	243	268	293	192	205	217	230	255	280	319	27	10.5

With Air Cushion

(mm)

Bore size	N1	WA
20	17.5	13
25	17.5	13
32	17.5	13
40	21.5	16

Built-in One-touch Fittings

(mm)

Bore size	G	P	Q
20	8	6	21.5
25	8	6	24.5
32	8	6	27
40	11	8	32.5

Clevis Pivot Bracket

(mm)

Bore size	LD	LF	LG	LH	LP	LT	LV	LY	LZ
20	6.8	15	30	30	37	3.2	18.4	59	152
25	6.8	15	30	30	37	3.2	18.4	59	156
32	9	15	40	40	50	4	28	75	174
40	9	15	40	40	50	4	28	75	203

Accessory Bracket Dimensions

Single Knuckle Joint (mm)

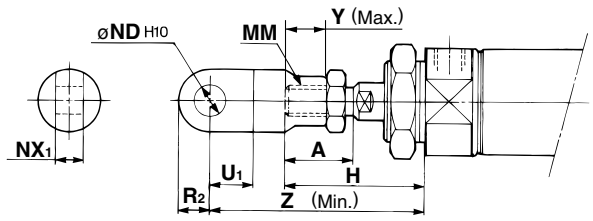

Bore size	A	H	MM	ND H10	NX1	U1	R2	Y	Z
20	18	41	M8 x 1.25	$9^{+0.058}_{0}$	$9^{-0.1}_{-0.2}$	14	10	11	66
25, 32	22	45	M10 x 1.25	$9^{+0.058}_{0}$	$9^{-0.1}_{-0.2}$	14	10	14	69
40	24	50	M14 x 1.5	$12^{+0.070}_{0}$	$16^{-0.1}_{-0.3}$	20	14	13	92

Single Knuckle Joint (mm)

I-020B/032B Material: Rolled steel **I-040B** Material: Free cutting sulfur steel

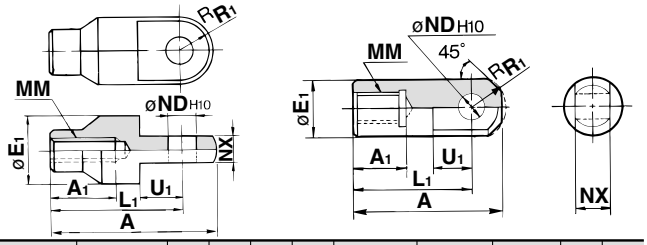

Part no.	Applicable bore size	A	A1	E1	L1	MM	ND H10	NX	R1	U1
I-020B	**20**	46	16	20	36	M8 x 1.25	$9^{+0.058}_{0}$	$9^{-0.1}_{-0.2}$	10	14
I-032B	**25, 32**	48	18	20	38	M10 x 1.25	$9^{+0.058}_{0}$	$9^{-0.1}_{-0.2}$	10	14
I-040B	**40**	69	22	24	55	M14 x 1.5	$12^{+0.070}_{0}$	$16^{-0.1}_{-0.3}$	15.5	20

Double Knuckle Joint (mm)

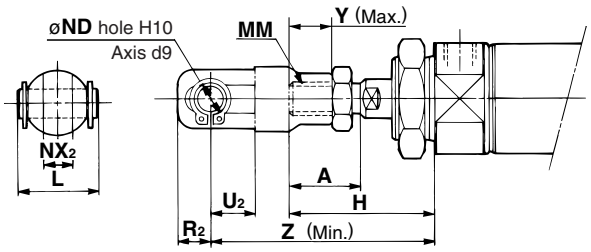

Bore size	A	H	L	MM	ND	NX2	R2	U2	Y	Z
20	18	41	25	M8 x 1.25	9	$9^{+0.2}_{+0.1}$	10	14	11	66
25, 32	22	45	25	M10 x 1.25	9	$9^{+0.2}_{+0.1}$	10	14	14	69
40	24	50	49.7	M14 x 1.5	12	$16^{+0.3}_{+0.1}$	13	25	13	92

Double Knuckle Joint (mm)

Y-020B/Y-032B Material: Rolled steel **Y-040B** Material: Cast iron

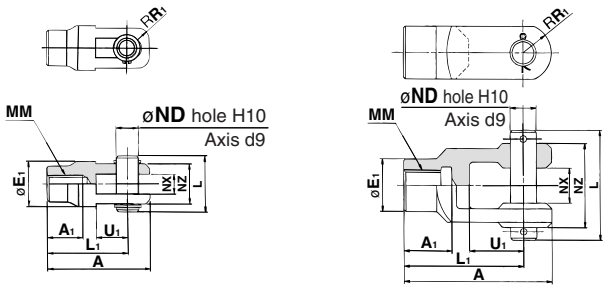

Part no.	Applicable bore size	A	A1	E1	L	L1	MM	ND	NX	NZ	R1	U1	Applicable pin part number	Retaining ring Cotter pin size
Y-020B	20	46	16	20	25	36	M8 x 1.25	9	$9^{+0.2}_{+0.1}$	18	5	14	CDP-1	Type C 9 for axis
Y-032B	25, 32	48	18	20	25	38	M10 x 1.25	9	$9^{+0.2}_{+0.1}$	18	5	14	CDP-1	Type C 9 for axis
Y-040B	40	68	22	24	49.7	55	M14 x 1.5	12	$16^{+0.3}_{+0.1}$	38	13	25	CDP-3	ø3 x 18ℓ

∗ Clevis pin and retaining ring (cotter pin for 40) are attached.

Double Clevis Pin/Material: Carbon steel (mm)

Bore size/ø20, ø25, ø32
CDP-1

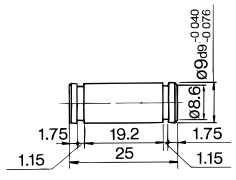

Retaining ring: Type C9 for axis

Bore size/ø40
CDP-2

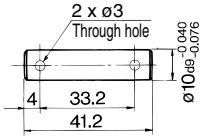

Cotter pin
ø3 x 18ℓ

∗ Retaining rings (cotter pins for ø40) are attached.

Double Knuckle Pin/Material: Carbon steel (mm)

Bore size/ø20, ø25, ø32
CDP-1

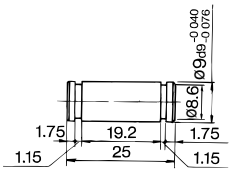

Retaining ring: Type C9 for axis

Bore size/ø40
CDP-3

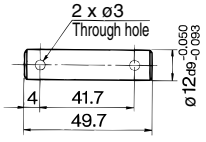

Cotter pin
ø3 x 18ℓ

∗ Retaining rings (cotter pins for ø40) are attached.

Rod End Nut (mm)

Material: Carbon steel

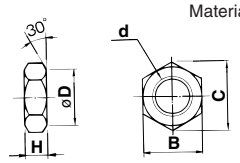

Part no.	Applicable bore size	B	C	D	d	H
NT-02	**20**	13	15.0	12.5	M8 x 1.25	5
NT-03	**25, 32**	17	19.6	16.5	M10 x 1.25	6
NT-04	**40**	22	25.4	21.0	M14 x 1.5	8

Mounting Nut (mm)

Material: Carbon steel

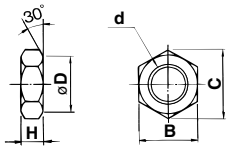

Part no.	Applicable bore size	B	C	D	d	H
SN-020B	**20**	26	30	25.5	M20 x 1.5	8
SN-032B	**25, 32**	32	37	31.5	M26 x 1.5	8
SN-040B	**40**	41	47.3	40.5	M32 x 2.0	10

Trunnion Nut (mm)

Material: Carbon steel

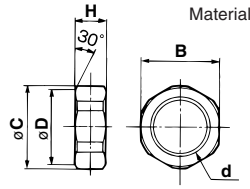

Part no.	Applicable bore size	B	C	D	d	H
TN-020B	**20**	26	28	25.5	M20 x 1.5	10
TN-032B	**25, 32**	32	34	31.5	M26 x 1.5	10
TN-040B	**40**	41	45	40.5	M32 x 2	10

Clevis Pivot Bracket (For CM2E) (mm)

Material: Rolled steel plate

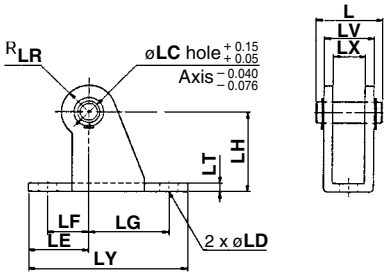

Part no.	Applicable bore size	L	LC	LD	LE	LF	LG	LH	LR	LT	LX	LY	LV	Applicable pin part no.
CM-E020B	**20, 25**	24.5	8	6.8	22	15	30	30	10	3.2	12	59	18.4	CD-S02
CM-E032B	**32, 40**	34	10	9	25	15	40	40	13	4	20	75	28	CD-S03

Note 1) Clevis pins and retaining rings (cotter pins for ø40) are attached.
Note 2) It cannot be used for single clevis style (CM2C) and double clevis style (CM2D).

Clevis Pin (For CM2E) (mm)

Material: Carbon steel

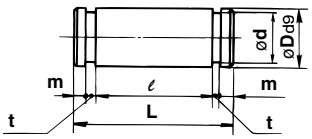

Part no.	Applicable bore size	D_{d9}	d	L	ℓ	m	t	Applicable retaining ring part no.
CD-S02	**20, 25**	$8^{-0.040}_{-0.076}$	7.6	24.5	19.5	1.6	0.9	Type C 8 for axis
CD-S03	**32, 40**	$10^{-0.040}_{-0.076}$	9.6	34	29	1.35	1.15	Type C 10 for axis

Note) Retaining rings are attached.

Regarding mounting bracket, accessory made of stainless steel (Some are not available.), refer to page 1408 for -XB12, External stainless steel cylinder.

Single Clevis

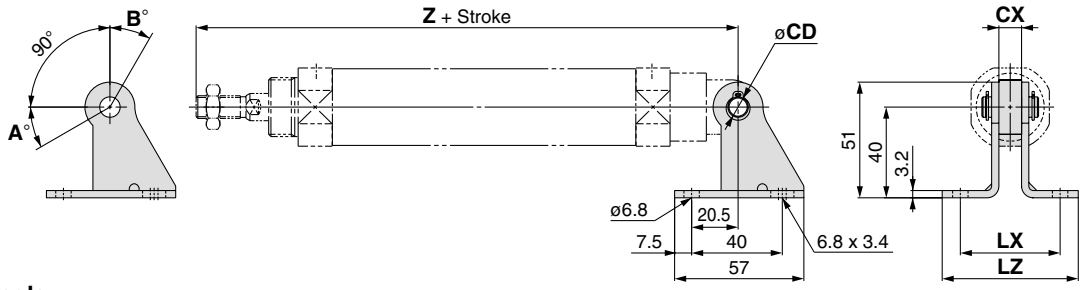

Rotation Angle

Bore size (mm)	A°	B°	A° + B° + 90°
20	25	85	200
25, 32	21	81	192
40	26	86	202

(mm)

Mounting	Part no.	Applicable bore size	CX	Z + Stroke	CD	LX	LZ
CM2C (Single clevis style)	CM-B032	**20**	10	133	9	44	60
		25		137			
		32		139			
	CM-B040	**40**	15	177	10	49	65

Note) Pivot brackets do not come with pivot bracket pins and retaining rings.

Rod Side Trunnion

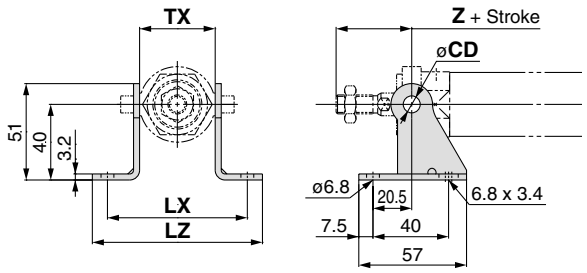

Head Side Trunnion

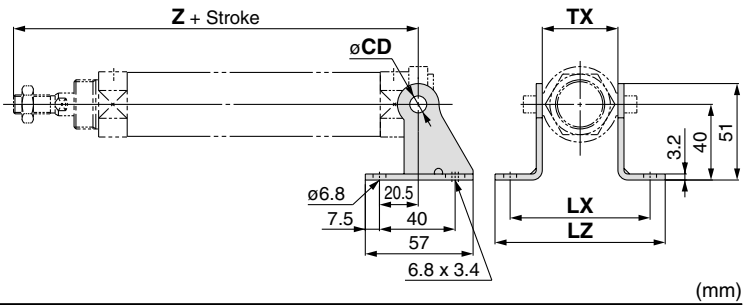

(mm)

Mounting	Part no.	Applicable bore size	TX	Rod side trunnion Z + Stroke	Head side trunnion Z + Stroke	CD	LX	LZ
CM2U/CM2T (Rod side/Head side trunnion)	CM-B020	**20**	32	36	108	8	66	82
	CM-B032	**25**	40	40	112	9	74	90
		32			114			
	CM-B040	**40**	53	44.5	143.5	10	87	103

Note) Pivot brackets do not come with pivot bracket pins and retaining rings.

Pivot Bracket

∗ 2 brackets per set

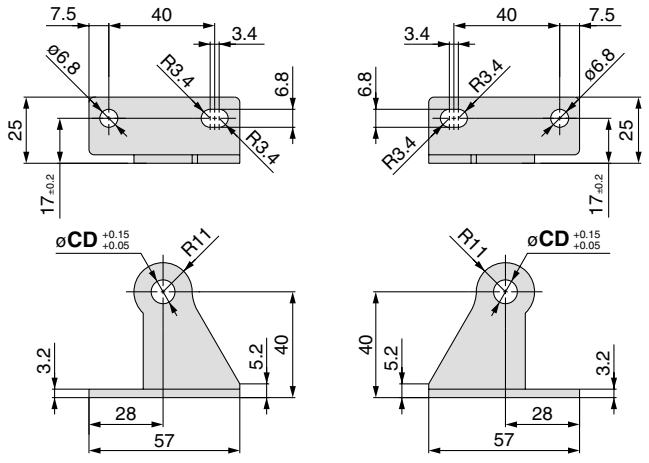

(mm)

Part no.	CD
CM-B020 (2)	8
CM-B032	9
CM-B040	10

Note 1) Pivot brackets do not come with pivot bracket pins and retaining rings.
Note 2) Only for trunnion type

Pivot Bracket Pin (For CM2C)

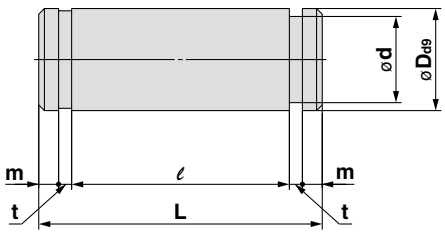

(mm)

Applicable bore size	Part no.	D_{d9}	d	L	ℓ	m	t	Applicable retaining ring part no.
20 to 32	CDP-1	$9^{-0.040}_{-0.076}$	8.6	25	19.2	1.75	1.15	Type C 9 for axis
40	CD-S03	$10^{-0.040}_{-0.076}$	9.6	34	29	1.75	1.15	Type C 10 for axis

Note) Pivot bracket pins come with retaining rings.

Air Cylinder: Standard Type
Double Acting, Double Rod
Series CM2W
ø20, ø25, ø32, ø40

How to Order

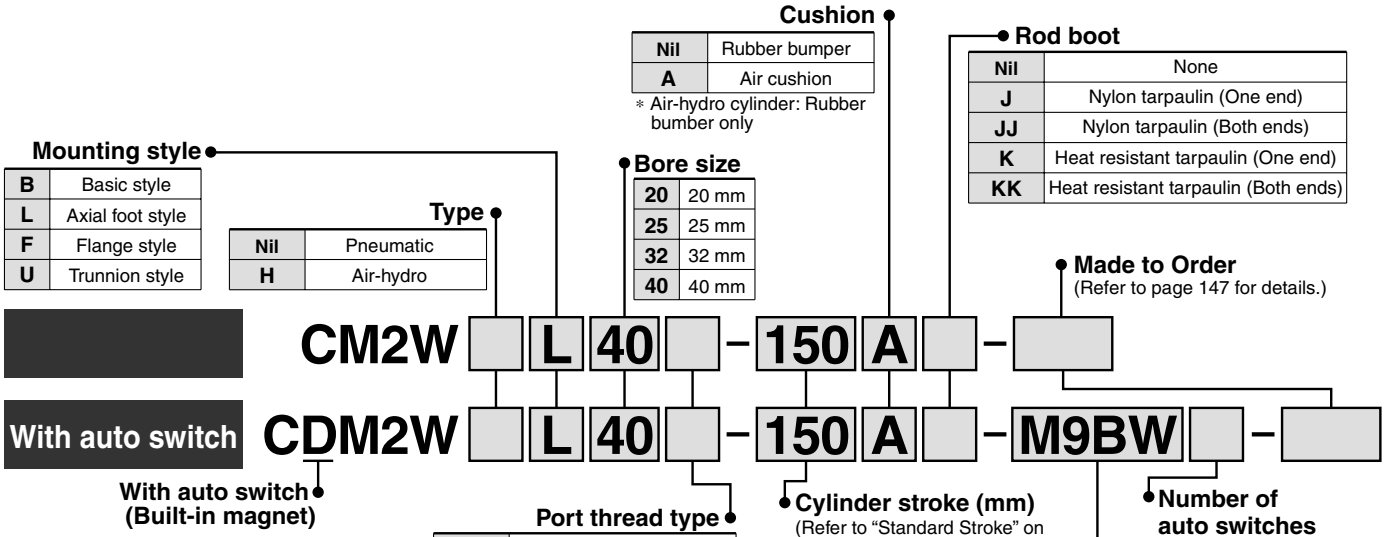

Built-in Magnet Cylinder Model

If a built-in magnet cylinder without an auto switch is required, there is no need to enter the symbol for the auto switch.
(Example) CDM2WF32-100

Applicable Auto Switch/Refer to pages 1263 to 1371 for further information on auto switches.

Type	Special function	Electrical entry	Indicator light	Wiring (Output)	Load voltage DC		Load voltage AC	Auto switch model	Lead wire length (m) 0.5 (Nil)	1 (M)	3 (L)	5 (Z)	None (N)	Pre-wired connector	Applicable load	
Solid state switch	——	Grommet	Yes	3-wire (NPN)	24V	5V, 12V	—	M9N	●	●	●	○	—	○	IC circuit	Relay, PLC
				3-wire (PNP)				M9P	●	●	●	○	—	○		
				2-wire		12V		M9B	●	●	●	○	—	○	—	
		Connector						H7C	●	—	●	●	●	—		
		Terminal conduit		3-wire (NPN)		5V, 12V		G39A **	—	—	—	—	●	—	IC circuit	
				2-wire		12V		K39A **	—	—	—	—	●	—	—	
	Diagnostic indication (2-color indication)	Grommet		3-wire (NPN)		5V,12V		M9NW	●	●	●	○	—	○	IC circuit	
				3-wire (PNP)				M9PW	●	●	●	○	—	○		
				2-wire		12V		M9BW	●	●	●	○	—	○	—	
	Water resistant (2-color indication)							H7BA	—	—	●	○	—	○		
	With diagnostic output (2-color indication)			4-wire (NPN)		5V, 12V		H7NF	●	—	●	○	—	○	IC circuit	
Reed switch	——	Grommet	Yes	3-wire (NPN equivalent)	—	5V	—	A96	●	—	●	—	—	—	IC circuit	—
			No	2-wire	24V	12V	100V	A93	●	—	●	—	—	—	—	Relay, PLC
							100V or less	A90	●	—	●	—	—	—	IC circuit	
			Yes				100V, 200V	B54 **	●	—	●	●	—	—	—	
			No				200V or less	B64 **	●	—	●	—	—	—		
		Connector	Yes				—	C73C	●	—	●	●	●	—		
			No				24V or less	C80C	●	—	●	●	●	—	IC circuit	
		Terminal conduit	Yes				—	A33A **	—	—	—	—	●	—	—	PLC
							100V, 200V	A34A **	—	—	—	—	●	—		Relay, PLC
		DIN terminal						A44A **	—	—	—	—	●	—		
	Diagnostic indication (2-color indication)	Grommet				—	—	B59W	●	—	●	—	—	—		

* Lead wire length symbols: 0.5 m ·····Nil (Example) M9NW
1 m ····· M (Example) M9NWM
3 m ····· L (Example) M9NWL
5 m ····· Z (Example) M9NWZ
None ····· N (Example) H7CN

* Solid state auto switches marked with "○" are produced upon receipt of order.
* D-A9□V/M9□V/M9□WV and D-M9□A(V)L cannot be mounted.
* Do not indicate suffix "N" for no lead wire on D-A3□A/A44A/G39A/K39A models.
** D-A3□A/A44A/G39A/K39A/B54/B64 cannot be mounted on bore sizes ø20 and ø25 cylinder with air cushion.

* Since there are other applicable auto switches than listed above, refer to page 218 for details.
* For details about auto switches with pre-wired connector, refer to pages 1328 and 1329.
* D-A9□/M9□/M9□W auto switches are shipped together (not assembled). (However, auto switch mounting brackets are assembled when being shipped.)



Specifications

Bore size (mm)		20	25	32	40
Action		Double acting, Double rod			
Fluid		Air			
Proof pressure		1.5 MPa			
Maximum operating pressure		1.0 MPa			
Minimum operating pressure		0.08 MPa			
Ambient and fluid temperature		Without auto switch: −10 to 70°C (No freezing) With auto switch: −10 to 60°C (No freezing)			
Lubrication		Not required (Non-lube)			
Stroke length tolerance		$^{+1.4}_{0}$ mm			
Piston speed		Rubber bumper: 50 to 750 mm/s, Air cushion: 50 to 1000 mm/s			
Cushion		Rubber bumper, Air cushion			
Allowable kinetic energy	**Rubber bumper**	0.27 J	0.4 J	0.65 J	1.2 J
	Air cushion (Effective cushion length (mm))	0.54 J (11.0)	0.78 J (11.0)	1.27 J (11.0)	2.35 J (11.8)

Standard Stroke

Bore size (mm)	Standard stroke (1) (mm)	Maximum stroke (mm)
20	25, 50, 75, 100, 125, 150 200, 250, 300	500
25		
32		
40		

Note 1) Other intermediate strokes can be manufactured upon receipt of order. Manufacture of intermediate strokes at 1 mm intervals is possible. (Spacers are not used.)
Note 2) When exceeding 300 strokes, the allowable maximum stroke length is determined by the stroke selection table (front matter 28).

JIS Symbol
Double acting

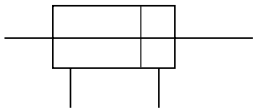

Made to Order Specifications
(For details, refer to pages 1373 to 1498.)

Symbol	Specifications
—XA□	Change of rod end shape
—XB6	Heat resistant cylinder (150°C)
—XB7	Cold resistant cylinder
—XB12	External stainless steel cylinder
—XC3	Special port location
—XC4	With heavy duty scraper
—XC5	Heat resistant cylinder (110°C)
—XC6	Piston rod and rod end nut made of stainless steel
—XC13	Auto switch mounting rail style
—XC22	Fluororubber seals
—XC25	No fixed orifice of connecting port
—XC29	Double knuckle joint with spring pin
—XC35	With coil scraper
—XC38	Vacuum (Rod through-hole)
—XC52	Mounting nut with set screw

Accessory Bracket

For mounting brackets, refer to pages 144 and 145.

Rod Boot Material

Symbol		Rod boot material	Maximum ambient temperature
One side	Both sides		
J	**JJ**	Nylon tarpaulin	70°C
K	**KK**	Heat resistant tarpaulin	110°C *

* Maximum ambient temperature for the rod boot itself.

Mounting Bracket/Part No.

Mounting bracket	Min. order	Bore size (mm)				Description (for min. order)
		20	**25**	**32**	**40**	
Axial foot	2	CM-L020B	CM-L032B		CM-L040B	2 foot, 1 mounting nut
Flange	1	CM-F020B	CM-F032B		CM-F040B	1 flange
Trunnion (with nuts)	1	CM-T020B	CM-T032B		CM-T040B	1 trunnion, 1 trunnion nut

* Order 2 foot brackets for each cylinder unit.

Refer to pages 214 to 218 for cylinders with auto switches.

- Minimum stroke for auto switch mounting
- Proper auto switch mounting position (detection at stroke end) and mounting height
- Operating range
- Switch mounting bracket: Part no.

Mounting Style and Accessory

Mounting \ Accessory	Standard equipment		Option		
	Mounting nut	Rod end nut	Single knuckle joint	Double knuckle joint (2)	Rod boot
Basic style	● (1 pc.)	● (2 pcs.)	●	●	●
Axial foot style	● (2)	● (2)	●	●	●
Flange style	● (1)	● (2)	●	●	●
Trunnion style	● (1) (1)	● (2)	●	●	●
Note					One/Both side(s)

Note 1) Trunnion nuts are attached for trunnion style.
Note 2) Pin and retaining ring (cotter pin for bore size ø40) are shipped together with double knuckle joint.

Mass

(kg)

Bore size (mm)		20	25	32	40
Basic mass	Basic style	0.16	0.25	0.32	0.65
	Axial foot style	0.31	0.41	0.48	0.92
	Flange style	0.22	0.34	0.41	0.77
	Trunnion style	0.20	0.32	0.38	0.75
Additional mass per each 50 mm of stroke		0.06	0.09	0.13	0.19
Option bracket	Single knuckle joint	0.06	0.06	0.06	0.23
	Double knuckle joint (With pin)	0.07	0.07	0.07	0.20

Calculation: (Example) **CM2WL32-100**
- Basic mass·····0.48 (Foot style, ø32)
- Additional mass·····0.13/50 st
- Cylinder stroke·····100 st

0.48 + 0.13 x 100/50 = 0.74 kg

⚠ Precautions

Be sure to read before handling. Refer to front matters 54 and 55 for Safety Instructions and pages 3 to 11 for Actuator and Auto Switch Precautions.

Operating Precautions

⚠ Warning

1. Do not rotate the cover.
If a cover is rotated when installing a cylinder or screwing a fitting into the port, it is likely to damage the junction part with cover.

2. Do not operate with the cushion needle in a fully closed condition.
Using it in the fully closed state will cause the cushion seal to be damaged. When adjusting the cushion needle, use the “Hexagon wrench key: nominal size 1.5”.

3. Do not open the cushion needle wide excessively.
If the cushion needle were set to be completely wide (more than 3 turns from fully closed), it would be equivalent to the cylinder with no cushion, thus making the impacts extremely high. Do not use it in such a way. Besides, using with fully open could give damage to the piston or cover.

⚠ Caution

1. Not able to disassemble.
Cover and cylinder tube are connected to each other by caulking method, thus making it impossible to disassemble. Therefore, internal parts of a cylinder other than rod seal are not replaceable.

2. Use caution to the popping of a retaining ring.
When replacing rod seals and removing and mounting a retaining ring, use a proper tool (retaining ring plier: tool for installing a type C retaining ring). Even if a proper tool is used, it is likely to inflict damage to a human body or peripheral equipment, as a retaining ring may be flown out of the tip of a plier. Be much careful with the popping of a retaining ring. Besides, be certain that a retaining ring is placed firmly into the groove of rod cover before supplying air at the time of installment.

3. Do not touch the cylinder during operation.
Use caution when handling a cylinder, which is running at a high speed and a high frequency, because the surface of a cylinder tube could get so hot enough as to cause you get burned.

4. Do not use an air cylinder as an air-hydro cylinder.
If it uses turbine oil in place of fluids for cylinder, it may result in oil leakage.

5. Combine the rod end section, so that a rod boot might not be twisted.
If a rod boot is installed with being twisted when installing a cylinder, it will cause a rod boot to fail during operation.

Air-hydro

CM2WH Mounting style | Bore size — Stroke | Rod boot

Air-hydro

A low hydraulic pressure cylinder used at a pressures of 1.0 MPa or below.
Through the concurrent use of a CC series air-hydro unit, it is possible to operate at a constant or low speeds or to effect an intermediate stop, just like a hydraulic unit, while using pneumatic equipment such as a valve.



Specifications

Type	Air-hydro type
Fluid	Turbine oil
Action	Double acting, Double rod
Bore size (mm)	ø20, ø25, ø32, ø40
Proof pressure	1.5 MPa
Max. operating pressure	1.0 MPa
Min. operating pressure	0.18 MPa
Piston speed	15 to 300 mm/s
Ambient and fluid temperature	+5 to +60°C
Thread tolerance **Stroke length tolerance**	+1.4 0 mm
Cushion	Rubber bumper (Standard equipment)
Mounting	Basic style, Axial foot style, Flange style, Trunnion style

∗ Auto switch can be mounted.

- For construction, refer to page 151.
- Since the dimensions of mounting style is the same as pages 153 to 155, refer to those pages.

Built-in One-touch Fittings

CM2W Mounting style | Bore size **F** — Stroke

Built-in One-touch fittings

This type has the One-touch fitting integrated in a cylinder, which enables to reduce the piping labor and installing space dramatically.

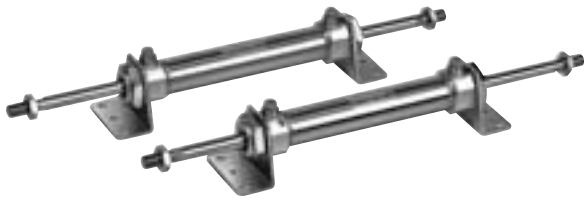

Specifications

Action	Double acting, Double rod
Bore size (mm)	ø20, ø25, ø32, ø40
Max. operating pressure	1.0 MPa
Min. operating pressure	0.08 MPa
Cushion	Rubber bumper
Piping	One-touch fitting
Piston speed	50 to 750 mm/s
Mounting	Basic style, Axial foot style, Flange style, Trunnion style

∗ Auto switch can be mounted.

Applicable Tubing O.D./I.D.

Bore size (mm)	20	25	32	40
Applicable tubing O.D./I.D. (mm)	6/4	6/4	6/4	8/6
Applicable tubing material	Can be used for either nylon, soft nylon or polyurethane tube.			

⚠ Caution

1. One-touch fitting cannot be replaced.
   - One-touch fitting is press-fit into the cover, thus cannot be replaced.
2. Refer to Fittings and Tubing Precautions (Best Pneumatics No. 6) for handling one-touch fittings.

- For construction, refer to page 151.
- For dimensions of each mounting style, refer to pages 153 to 155.
- For other specifications, refer to page 147.

Clean Series

10-CM2W | **Mounting style** | **Bore size** — **Stroke**

Clean Series (With relief port)

The type which is applicable for using inside the clean room graded Class 100 by making an actuator's rod section a double seal construction and discharging by relief port directly to the outside of clean room.



Specifications

Action	Double acting, Double rod
Bore size (mm)	ø20, ø25, ø32, ø40
Max. operating pressure	1.0 MPa
Min. operating pressure	0.08 MPa
Cushion	Rubber bumper
Relief port size	M5 x 0.8
Piston speed	30 to 400 mm/s
Mounting	Basic style, Axial foot style, Flange style

∗ Auto switch can be mounted.

Construction

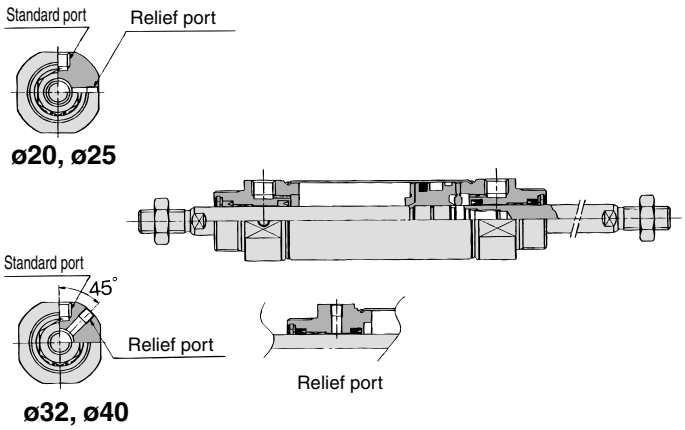

For details, refer to the separate catalog, "Pneumatic Clean Series".

Copper/Fluorine-free

20-CM2W | **Mounting style** | **Bore size** — **Stroke**

Copper/fluorine-free

The type which prevents copper based ions from generating by changing the copper based materials into electroless nickel plated treatment or non-copper materials in order to eliminate the effects by copper based ions or fluororesins over the color cathode ray tube.



Specifications

Action	Double acting, Double rod	
Bore size (mm)	ø20, ø25, ø32, ø40	
Max. operating pressure	1.0 MPa	
Min. operating pressure	0.08 MPa	
Cushion	Rubber bumper	Air cushion
Piston speed	50 to 750 mm/s	50 to 1000 mm/s
Mounting	Basic style, Axial foot style, Flange style, Trunnion style	

∗ Auto switch can be mounted.

Construction

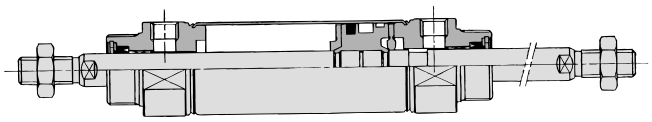

The above shows the case of rubber bumper.

Construction

Rubber bumper

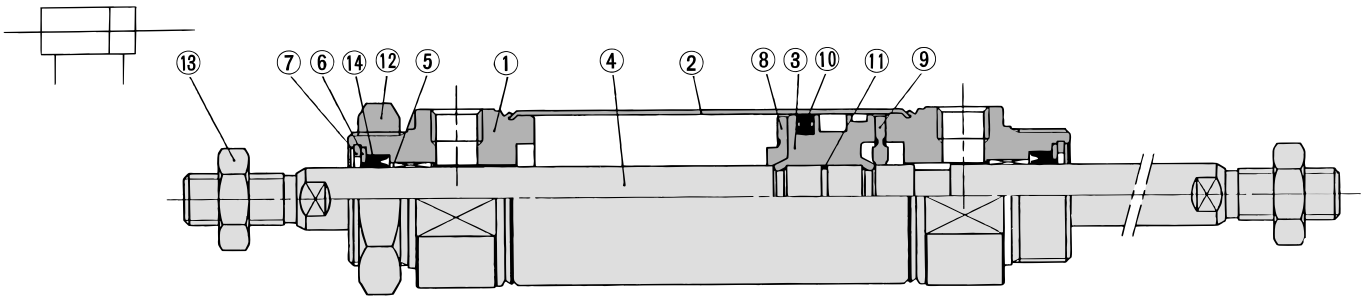

Air-hydro

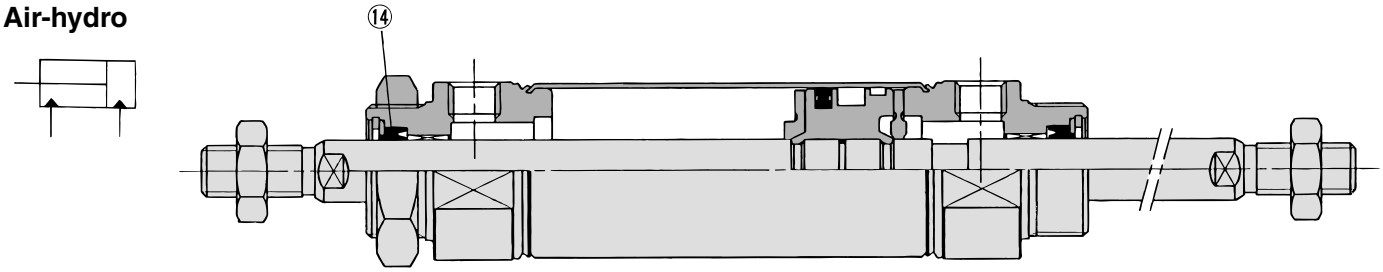

With air cushion

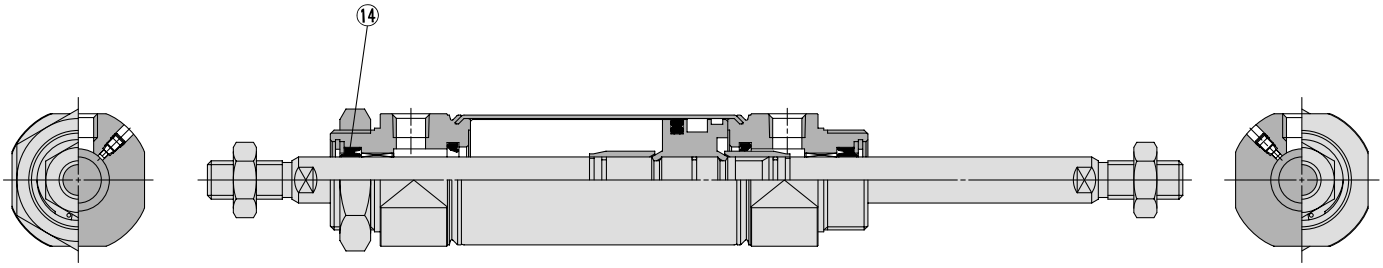

Built-in One-touch fittings

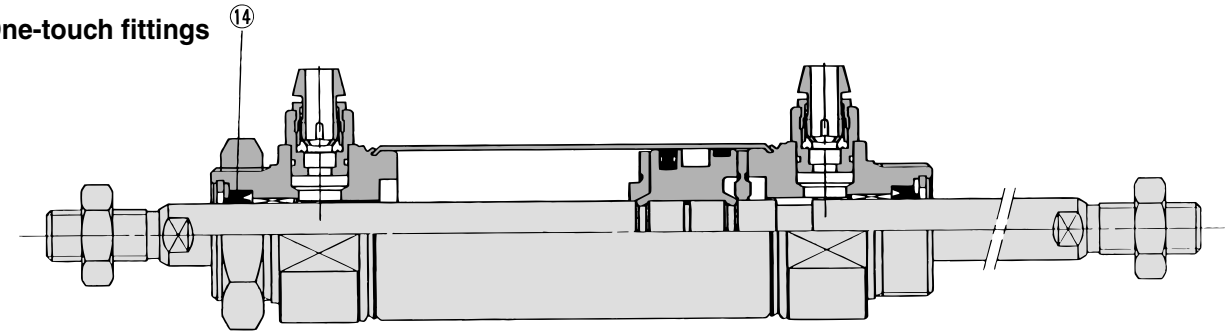

Component Parts

No.	Description	Material	Note
1	**Rod cover**	Aluminum alloy	Clear anodized
2	**Cylinder tube**	Stainless steel	
3	**Piston**	Aluminum alloy	Chromated
4	**Piston rod**	Carbon steel	Hard chrome plated
5	**Bushing**	Copper oil-impregnated sintered alloy	
6	**Seal retainer**	Stainless steel	
7	**Retaining ring**	Carbon steel	Phosphate coated
8	**Bumper A**	Urethane	
9	**Bumper B**	Urethane	
10	**Piston seal**	NBR	
11	**Piston gasket**	NBR	
12	**Mounting nut**	Carbon steel	Nickel plated
13	**Rod end nut**	Carbon steel	Nickel plated

Replacement Part: Seal

●With rubber bumper/Air Cushion/Built-in One-touch Fittings

No.	Description	Material	Part no.			
			20	**25**	**32**	**40**
14	**Rod seal**	NBR	PDU-8Z	PDU-10Z	PDU-12LZ	PDU-14LZ

●Air-hydro

No.	Description	Material	Part no.			
			20	**25**	**32**	**40**
14	**Rod seal**	NBR	HDU-8	HDU-10	HDU-12L	HDU-14

∗ Since the seal kit does not include a grease pack, order it separately.
Grease pack part no.: GR-S-010 (10 g)

Basic Style (B)

CM2WB Bore size — Stroke

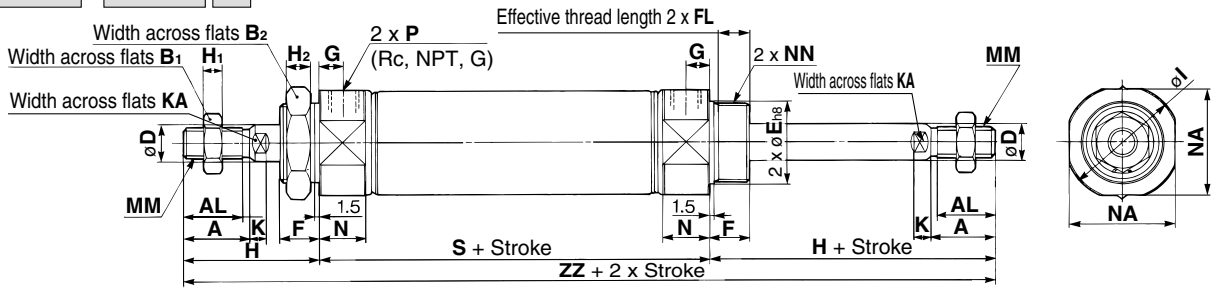

With rod boot (One side)

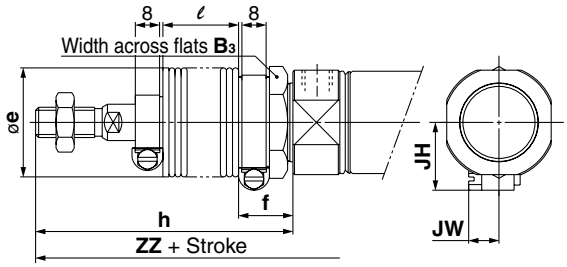

With rod boot (Both sides)

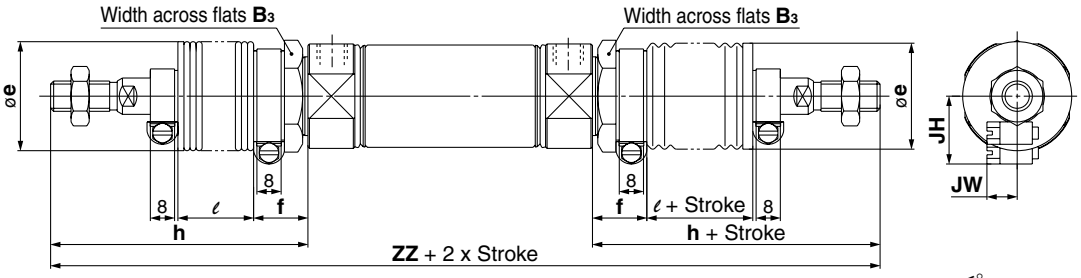

With air cushion

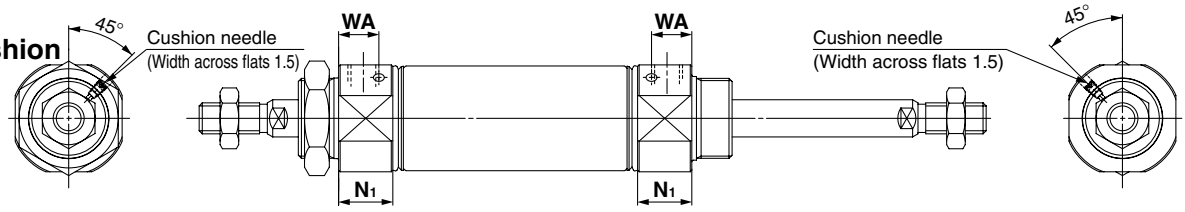

Built-in One-touch fittings

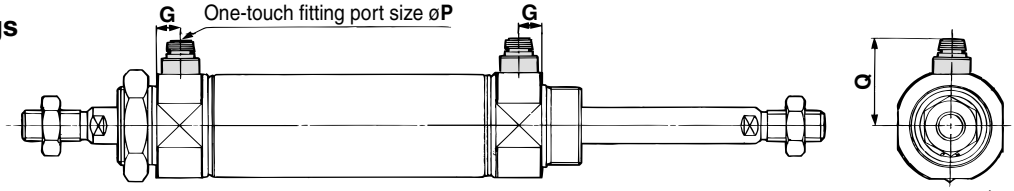

(mm)

Bore size (mm)	A	AL	B_1	B_2	D	E	F	FL	G	H	H_1	H_2	I	K	KA	MM	N	NA	NN	P	S	ZZ
20	18	15.5	13	26	8	$20^{0}_{-0.033}$	13	10.5	8	41	5	8	28	5	6	M8 x 1.25	15	24	M20 x 1.5	1/8	62	144
25	22	19.5	17	32	10	$26^{0}_{-0.033}$	13	10.5	8	45	6	8	33.5	5.5	8	M10 x 1.25	15	30	M26 x 1.5	1/8	62	152
32	22	19.5	17	32	12	$26^{0}_{-0.033}$	13	10.5	8	45	6	8	37.5	5.5	10	M10 x 1.25	15	34.5	M26 x 1.5	1/8	64	154
40	24	21	22	41	14	$32^{0}_{-0.039}$	16	13.5	11	50	8	10	46.5	7	12	M14 x 1.5	21.5	42.5	M32 x 2	1/4	88	188

With Rod Boot

(mm)

Bore size (mm)	B_3	e	f	h					ℓ					ZZ (Both sides)				
				1 to 50	51 to 100	101 to 150	151 to 200	201 to 300	1 to 50	51 to 100	101 to 150	151 to 200	201 to 300	1 to 50	51 to 100	101 to 150	151 to 200	201 to 300
20	30	36	18	68	81	93	106	131	12.5	25	37.5	50	75	198	224	248	274	324
25	32	36	18	72	85	97	110	135	12.5	25	37.5	50	75	206	232	256	282	332
32	32	36	18	72	85	97	110	135	12.5	25	37.5	50	75	208	234	258	284	334
40	41	46	20	77	90	102	115	140	12.5	25	37.5	50	75	242	268	292	318	368

With Rod Boot

(mm)

Bore size (mm)	ZZ (One side)					JH	JW
	1 to 50	51 to 100	101 to 150	151 to 200	201 to 300		
20	171	184	196	209	234	23.5	10.5
25	179	192	204	217	242	23.5	10.5
32	181	194	206	219	244	23.5	10.5
40	215	228	240	253	278	27	10.5

With Air Cushion

(mm)

Bore size (mm)	N_1	WA
20	17.5	13
25	17.5	13
32	17.5	13
40	21.5	16

Built-in One-touch Fittings

(mm)

Bore size (mm)	G	P	Q
20	8	6	21.5
25	8	6	24.5
32	8	6	27
40	11	8	32.5

Axial Foot Style (L)

CM2WL Bore size — Stroke

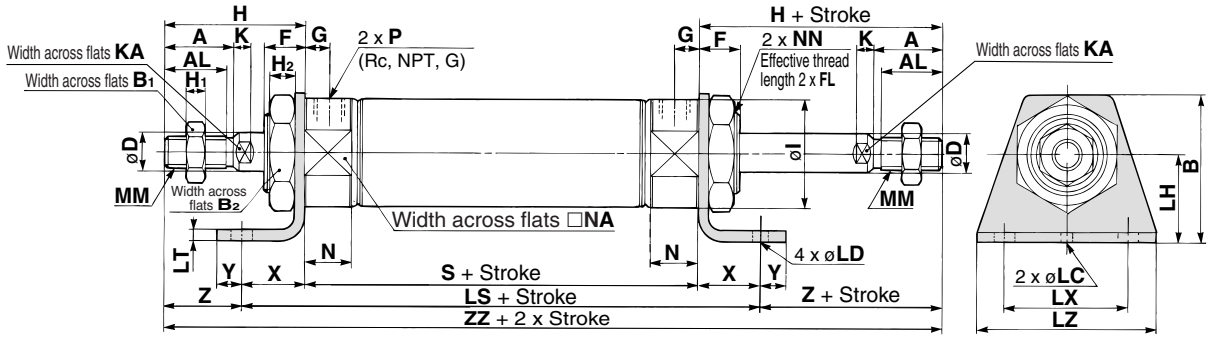

With air cushion

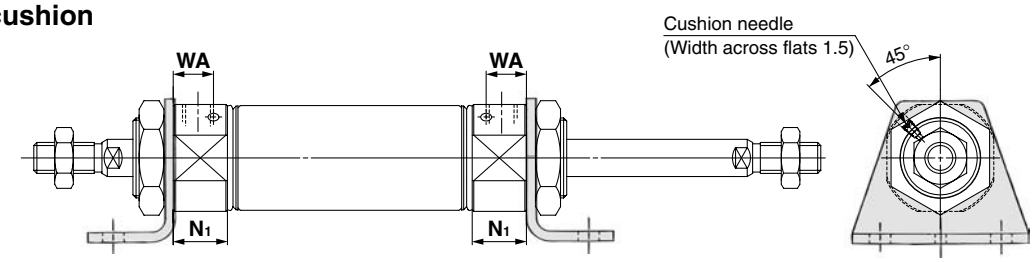

Built-in One-touch fittings

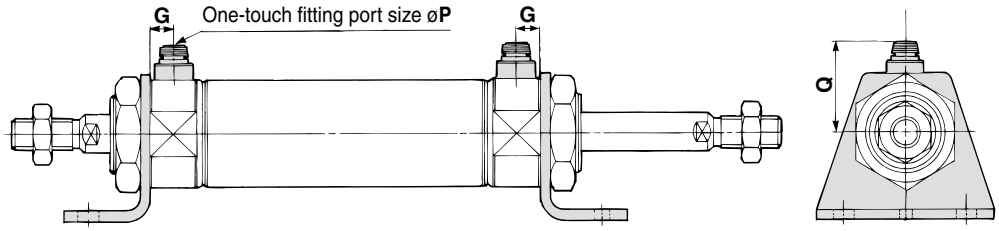

(mm)

Bore size (mm)	A	AL	B	B1	B2	D	F	FL	G	H	H1	H2	I	K	KA	LC	LD	LH	LS	LT	LX	LZ	MM	N	NA	NN	P	S	X	Y	Z	ZZ
20	18	15.5	40	13	26	8	13	10.5	8	41	5	8	28	5	6	4	6.8	25	102	3.2	40	55	M8 x 1.25	15	24	M20 x 1.5	1/8	62	20	8	21	144
25	22	19.5	47	17	32	10	13	10.5	8	45	6	8	33.5	5.5	8	4	6.8	28	102	3.2	40	55	M10 x 1.25	15	30	M26 x 1.5	1/8	62	20	8	25	152
32	22	19.5	47	17	32	12	13	10.5	8	45	6	8	37.5	5.5	10	4	6.8	28	104	3.2	40	55	M10 x 1.25	15	34.5	M26 x 1.5	1/8	64	20	8	25	154
40	24	21	54	22	41	14	16	13.5	11	50	8	10	46.5	7	12	4	7	30	134	3.2	55	75	M14 x 1.5	21.5	42.5	M32 x 2	1/4	88	23	10	27	188

With Air Cushion (mm)

Bore size (mm)	N1	WA
20	17.5	13
25	17.5	13
32	17.5	13
40	21.5	16

Built-in One-touch Fittings (mm)

Bore size (mm)	G	P	Q
20	8	6	21.5
25	8	6	24.5
32	8	6	27
40	11	8	32.5

* In the case of with rod boot, refer to basic style on page 152 and f dimension on page 136.

Series CM2W

Flange Style (F)

CM2WF Bore size — Stroke

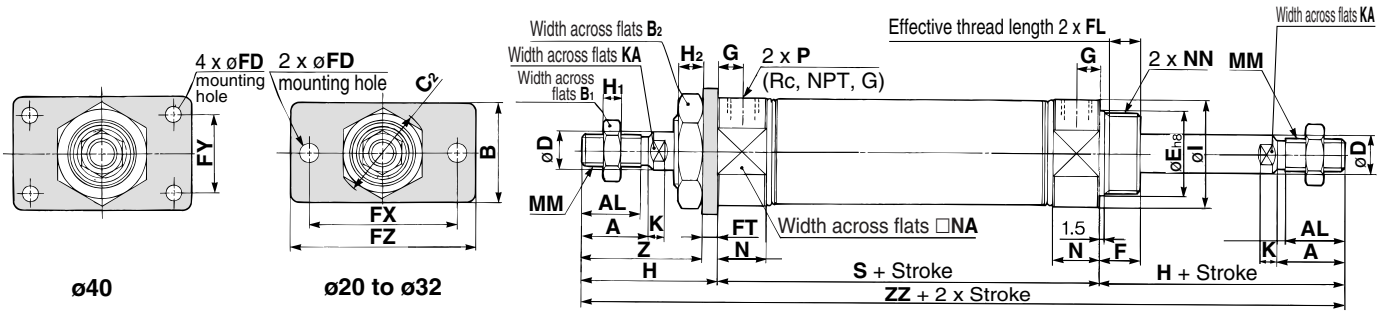

With air cushion

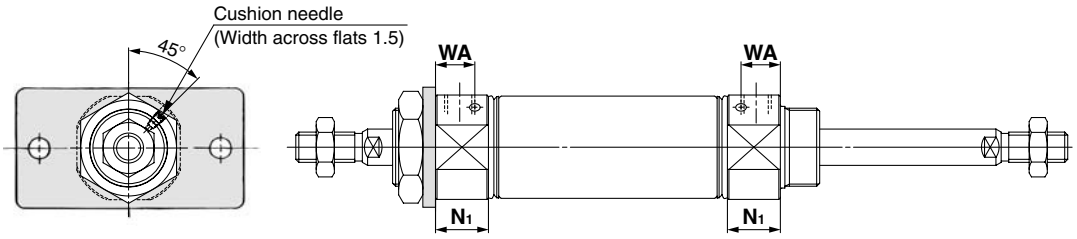

Built-in One-touch fittings

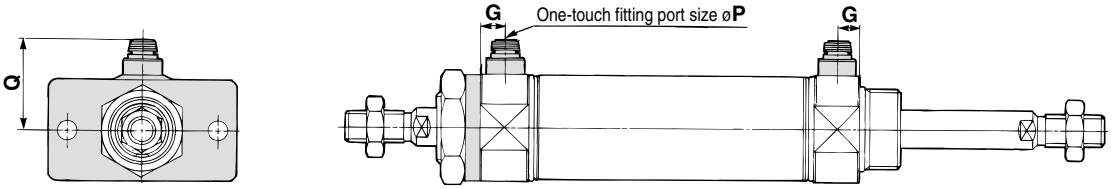

(mm)

Bore size (mm)	A	AL	B	B_1	B_2	C_2	D	E	F	FD	FL	FT	FX	FY	FZ	G	H	H_1	H_2	I	K	KA	MM
20	18	15.5	34	13	26	30	8	$20^{0}_{-0.033}$	13	7	10.5	4	60	—	75	8	41	5	8	28	5	6	M8 x 1.25
25	22	19.5	40	17	32	37	10	$26^{0}_{-0.033}$	13	7	10.5	4	60	—	75	8	45	6	8	33.5	5.5	8	M10 x 1.25
32	22	19.5	40	17	32	37	12	$26^{0}_{-0.033}$	13	7	10.5	4	60	—	75	8	45	6	8	37.5	5.5	10	M10 x 1.25
40	24	21	52	22	41	47.3	14	$32^{0}_{-0.039}$	16	7	13.5	5	66	36	82	11	50	8	10	46.5	7	12	M14 x 1.5

(mm)

Bore size (mm)	N	NA	NN	P	S	Z	ZZ
20	15	24	M20 x 1.5	1/8	62	37	144
25	15	30	M26 x 1.5	1/8	62	41	152
32	15	34.5	M26 x 1.5	1/8	64	41	154
40	21.5	42.5	M32 x 2	1/4	88	45	188

With Air Cushion (mm)

Bore size (mm)	N_1	WA
20	17.5	13
25	17.5	13
32	17.5	13
40	21.5	16

Built-in One-touch Fittings (mm)

Bore size (mm)	G	P	Q
20	8	6	21.5
25	8	6	24.5
32	8	6	27
40	11	8	32.5

* In the case of with rod boot, refer to basic style on page 152 and f dimension on page 137.

Trunnion Style (U)

CM2WU Bore size — Stroke

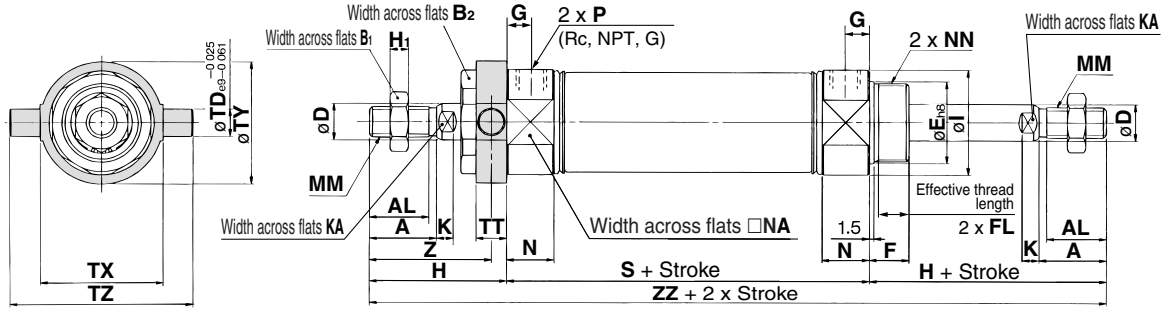

With air cushion

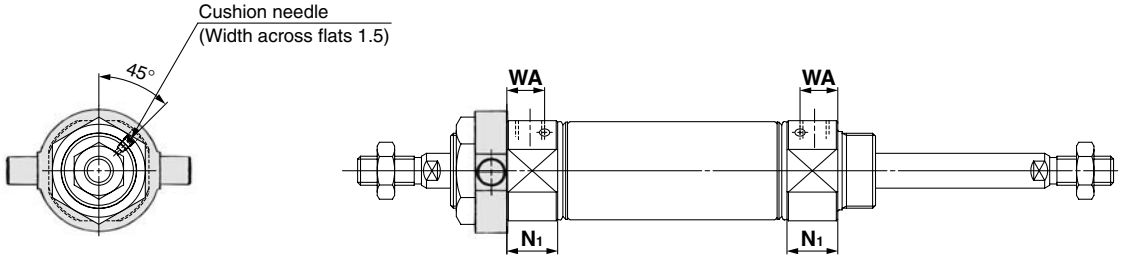

Built-in One-touch fittings

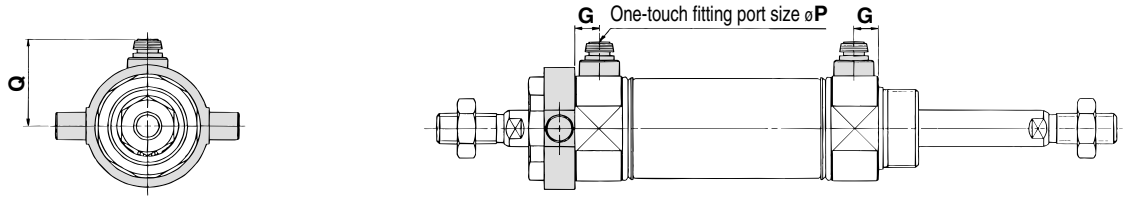

(mm)

Bore size (mm)	A	AL	B_1	B_2	D	E	F	FL	G	H	H_1	I	K	KA	MM	N	NA	NN	P	S
20	18	15.5	13	26	8	$20^{\ 0}_{-0.033}$	13	10.5	8	41	5	28	5	6	M8 x 1.25	15	24	M20 x 1.5	1/8	62
25	22	19.5	17	32	10	$26^{\ 0}_{-0.033}$	13	10.5	8	45	6	33.5	5.5	8	M10 x 1.25	15	30	M26 x 1.5	1/8	62
32	22	19.5	17	32	12	$26^{\ 0}_{-0.033}$	13	10.5	8	45	6	37.5	5.5	10	M10 x 1.25	15	34.5	M26 x 1.5	1/8	64
40	24	21	22	41	14	$32^{\ 0}_{-0.039}$	16	13.5	11	50	8	46.5	7	12	M14 x 1.5	21.5	42.5	M32 x 2	1/4	88

(mm)

Bore size (mm)	TD	TT	TX	TY	TZ	Z	ZZ
20	8	10	32	32	52	36	144
25	9	10	40	40	60	40	152
32	9	10	40	40	60	40	154
40	10	11	53	53	77	44.5	188

With Air Cushion (mm)

Bore size (mm)	N_1	WA
20	17.5	13
25	17.5	13
32	17.5	13
40	21.5	16

Built-in One-touch Fittings (mm)

Bore size (mm)	G	P	Q
20	8	6	21.5
25	8	6	24.5
32	8	6	27
40	11	8	32.5

∗ In the case of with rod boot, refer to basic style on page 152 and f dimension on page 141.

Air Cylinder: Standard Type
Single Acting, Spring Return/Extend
Series CM2
ø20, ø25, ø32, ø40

How to Order

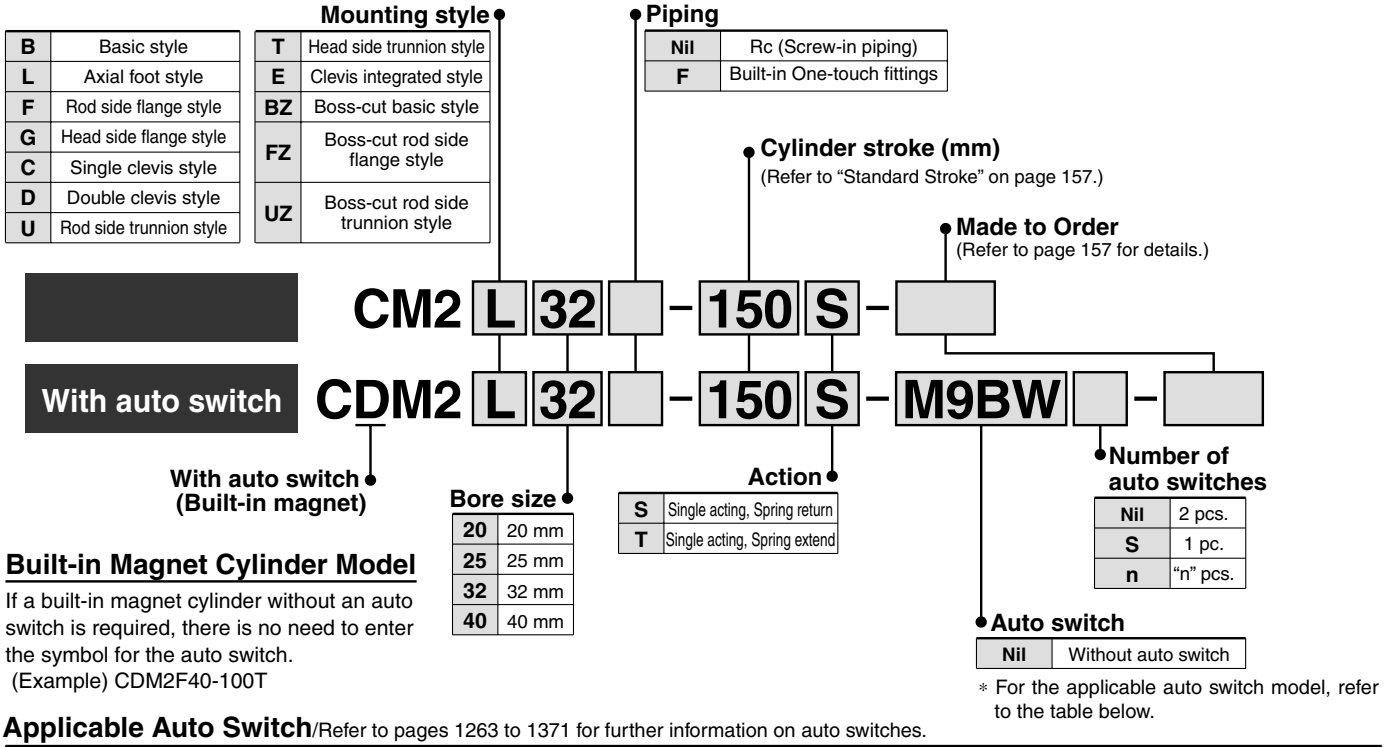

Built-in Magnet Cylinder Model

If a built-in magnet cylinder without an auto switch is required, there is no need to enter the symbol for the auto switch.
(Example) CDM2F40-100T

∗ For the applicable auto switch model, refer to the table below.

Applicable Auto Switch/Refer to pages 1263 to 1371 for further information on auto switches.

Type	Special function	Electrical entry	Indicator light	Wiring (Output)	Load voltage DC	Load voltage AC	Auto switch model	Lead wire length (m) 0.5 (Nil)	1 (M)	3 (L)	5 (Z)	None (N)	Pre-wired connector	Applicable load	
Solid state switch	——	Grommet	Yes	3-wire (NPN)	5V, 12V	—	M9N	●	●	●	○	○	○	IC circuit	Relay, PLC
				3-wire (PNP)			M9P	●	●	●	○	○	○		
				2-wire	12V		M9B	●	●	●	○	○	○	—	
		Connector					H7C	●	—	●	●	●	—		
		Terminal conduit		3-wire (NPN)	5V, 12V		G39A	—	—	—	—	●	—	IC circuit	
				2-wire	12V		K39A	—	—	—	—	●	—	—	
	Diagnostic indication (2-color indication)	Grommet		3-wire (NPN)	5V,12V		M9NW	●	●	●	○	○	○	IC circuit	
				3-wire (PNP)			M9PW	●	●	●	○	○	○		
				2-wire	12V		M9BW	●	●	●	○	○	○	—	
	Water resistant (2-color indication)						H7BA	—	—	●	○	○	○		
	With diagnostic output (2-color indication)			4-wire (NPN)	5V, 12V		H7NF	●	—	●	○	○	○	IC circuit	
Reed switch	——	Grommet	Yes	3-wire (NPN equivalent)	—	5V	A96	●	—	●	—	—	—	IC circuit	—
			No	2-wire	24V	100V	A93	●	—	●	—	—	—	—	Relay, PLC
			Yes			100V or less	A90	●	—	●	—	—	—	IC circuit	
			No			100V, 200V	B54	●	—	●	●	—	—	—	
		Connector	Yes			200V or less	B64	●	—	●	—	—	—		
			No			—	C73C	●	—	●	●	●	—		
						24V or less	C80C	●	—	●	●	●	—	IC circuit	
		Terminal conduit	Yes			—	A33A	—	—	—	—	●	—	—	PLC
						100V, 200V	A34A	—	—	—	—	●	—	—	Relay, PLC
		DIN terminal					A44A	—	—	—	—	●	—		
	Diagnostic indication (2-color indication)	Grommet			—	—	B59W	●	—	●	—	—	—		

∗ Lead wire length symbols: 0.5 m ·····Nil (Example) M9NW
1 m ·····M (Example) M9NWM
3 m ····· L (Example) M9NWL
5 m ····· Z (Example) M9NWZ
None ····· N (Example) H7CN

∗ Solid state auto switches marked with "○" are produced upon receipt of order.
∗ D-A9□V/M9□V/M9□WV and D-M9□A(V)L cannot be mounted.
∗ Do not indicate suffix "N" for no lead wire on D-A3□A/A44A/G39A/K39A models.

∗ Since there are other applicable auto switches than listed above, refer to page 218 for details.
∗ For details about auto switches with pre-wired connector, refer to pages 1328 and 1329.
∗ D-A9□/M9□/M9□W auto switches are shipped together (not assembled). (However, auto switch mounting brackets are assembled when being shipped.)



Specifications

Bore size (mm)		20	25	32	40
Action		Single acting, Spring return/Single acting, Spring extend			
Type		Pneumatic			
Cushion		Rubber bumper			
Fluid		Air			
Proof pressure		1.5 MPa			
Maximum operating pressure		1.0 MPa			
Minimum operating pressure	Single acting, Spring return	0.18 MPa			
	Single acting, Spring extend	0.23 MPa			
Ambient and fluid temperature		Without auto switch: –10 to 70°C (No freezing) With auto switch: –10 to 60°C (No freezing)			
Lubrication		Not required (Non-lube)			
Stroke length tolerance		$^{+1.4}_{0}$ mm			
Piston speed		50 to 750 mm/s			
Allowable kinetic energy (J)		0.27	0.4	0.65	1.2

Standard Stroke

Bore size (mm)	Standard stroke (mm) (1)
20	25, 50, 75, 100, 125, 150
25	25, 50, 75, 100, 125, 150
32	25, 50, 75, 100, 125, 150, 200
40	25, 50, 75, 100, 125, 150, 200, 250

Note 1) Other intermediate strokes can be manufactured upon receipt of order.
Manufacture of intermediate strokes at 1 mm intervals is possible.
(Spacers are not used.)
Note 2) Please contact SMC for longer strokes.

Mounting Bracket

For the mounting bracket part numbers other than basic style, refer to page 158.

Theoretical Output

Refer to "Theoretical Output 1" on page 1573.

Spring Reaction Force

Refer to page 1570 (Table 3: Spring Reaction Force).

JIS Symbol

Single acting, Spring return

Spring extend

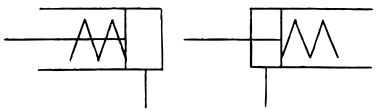

Made to Order Specifications

(For details, refer to pages 1373 to 1498.)

Symbol	Specifications
—XA□	Change of rod end shape
—XB12	External stainless steel cylinder
—XC3	Special port location
—XC6	Piston rod and rod end nut made of stainless steel
—XC13	Auto switch mounting rail style
—XC20	Head cover axial port
—XC25	No fixed orifice of connecting port
—XC27	Double clevis pin and double knuckle pin made of stainless steel
—XC29	Double knuckle joint with spring pin
—XC52	Mounting nut with set screw

Refer to pages 214 to 218 for cylinders with auto switches.

- Minimum stroke for auto switch mounting
- Proper auto switch mounting position (detection at stroke end) and mounting height
- Operating range
- Switch mounting bracket: Part no.

Boss-cut style

Boss for the head side cover bracket is eliminated and the total length of cylinder is shortened.



Comparison of the Full Length Dimension (Versus standard type) (mm)

ø20	ø25	ø32	ø40
▲13	▲13	▲13	▲16

Mounting style

■ Boss-cut basic style (BZ) ■ Boss-cut flange style (FZ)
■ Boss-cut trunnion style (UZ)

Mounting Style and Accessory

Mounting \ Accessory	Standard equipment			Option		
	Mounting nut	Rod end nut	Clevis pin	Single knuckle joint	Double knuckle joint [3]	Clevis bracket [4]
Basic style	● (1 pc.)	●	—	●	●	—
Axial foot style	● (2)	●	—	●	●	—
Rod side flange style	● (1)	●	—	●	●	—
Head side flange style	● (1)	●	—	●	●	—
Clevis integrated style	— [1]	●	—	●	●	●
Single clevis style	— [1]	●	—	●	●	—
Double clevis style [3]	— [1]	●	● [5]	●	●	—
Rod side trunnion style	● (1) [2]	●	—	●	●	—
Head side trunnion style	● (1) [2]	●	—	●	●	—
Boss-cut basic style	● (1)	●	—	●	●	—
Boss-cut flange style	● (1)	●	—	●	●	—
Boss-cut trunnion style	● (1)	●	—	●	●	—

Note 1) Mounting nuts are not attached for clevis integrated style, single clevis, and double clevis styles.
Note 2) Trunnion nuts are attached for rod side trunnion and head side trunnion styles.
Note 3) Pin and retaining ring (cotter pin for bore size ø40) are shipped together with double clevis and double knuckle joint.
Note 4) Pin and retaining ring are shipped together with clevis pivot bracket.
Note 5) Clevis pins and retaining rings (cotter pins for ø40) are attached.

Mounting Bracket/Part No.

Mounting bracket	Min. order	Bore size (mm)				Description (for min. order)
		20	25	32	40	
Axial foot *	2	CM-L020B	CM-L032B		CM-L040B	2 foot, 1 mounting nut
Flange	1	CM-F020B	CM-F032B		CM-F040B	1 flange
Single clevis	1	CM-C020B	CM-C032B		CM-C040B	1 single clevis, 3 liners
Double clevis ** *** (with pins)	1	CM-D020B	CM-D032B		CM-D040B	1 double clevis, 3 liners, 1 clevis pins, 2 retaining rings
Trunnion (with nuts)	1	CM-T020B	CM-T032B		CM-T040B	1 trunnion, 1 trunnion nut

* Order 2 foot brackets for each cylinder unit.
** 3 Liners are attached with a clevis bracket for adjusting the mounting angle.
*** Clevis pins and retaining rings (cotter pins for ø40) are attached.

Accessory Bracket

For mounting brackets, refer to pages 144 and 145

Mass

Spring Return

(kg)

Bore size (mm)		20	25	32	40
Basic mass	25 stroke	0.20	0.30	0.42	0.77
	50 stroke	0.22	0.33	0.46	0.84
	75 stroke	0.27	0.42	0.58	1.03
	100 stroke	0.29	0.45	0.63	1.09
	125 stroke	0.35	0.54	0.76	1.29
	150 stroke	0.37	0.57	0.80	1.36
	200 stroke	—	—	0.97	1.61
	250 stroke	—	—	—	1.87
Mounting bracket mass	Foot style	0.15	0.16	0.16	0.27
	Flange style	0.06	0.09	0.09	0.12
	Single clevis style	0.04	0.04	0.04	0.09
	Double clevis style	0.05	0.06	0.06	0.13
	Trunnion style	0.04	0.07	0.07	0.10
	Clevis integrated style	–0.02	–0.02	–0.01	–0.04
	Boss-cut basic style	–0.01	–0.02	–0.02	–0.03
	Boss-cut flange style	0.05	0.07	0.07	0.09
	Boss-cut trunnion style	0.03	0.05	0.05	0.07
	Pivot bracket (With pin)	0.07	0.07	0.14	0.14
Option bracket	Single knuckle joint	0.06	0.06	0.06	0.23
	Double knuckle joint (With pin)	0.07	0.07	0.07	0.20

Calculation: (Example) **CM2L32-100S** (Bore size ø32, Foot style, 100 stroke)
0.63 (Basic mass) + 0.16 (Mounting bracket mass) = 0.79 kg

Spring Extend

(kg)

Bore size (mm)		20	25	32	40
Basic mass	25 stroke	0.19	0.29	0.40	0.74
	50 stroke	0.21	0.32	0.44	0.81
	75 stroke	0.25	0.39	0.54	0.97
	100 stroke	0.27	0.42	0.58	1.03
	125 stroke	0.32	0.49	0.69	1.20
	150 stroke	0.34	0.52	0.73	1.27
	200 stroke	—	—	0.88	1.49
	250 stroke	—	—	—	1.72
Mounting bracket mass	Foot style	0.15	0.16	0.16	0.27
	Flange style	0.06	0.09	0.09	0.12
	Single clevis style	0.04	0.04	0.04	0.09
	Double clevis style	0.05	0.06	0.06	0.13
	Trunnion style	0.04	0.07	0.07	0.10
	Clevis integrated style	–0.02	–0.02	–0.01	–0.04
	Boss-cut basic style	–0.01	–0.02	–0.02	–0.03
	Boss-cut flange style	0.05	0.07	0.07	0.09
	Boss-cut trunnion style	0.03	0.05	0.05	0.07
	Pivot bracket (With pin)	0.07	0.07	0.14	0.14
Option bracket	Single knuckle joint	0.06	0.06	0.06	0.23
	Double knuckle joint (With pin)	0.07	0.07	0.07	0.20

Built-in One-touch Fitting

CM2 [Mounting style] [Bore size] **F** – [Stroke] [Action]

F: Built-in One-touch fitting

This type has the One-touch fitting integrated in a cylinder, which enables to reduce the piping labor and installing space dramatically.



- For construction, refer to page 161.
- For dimensions of each mounting style, refer to pages 163 to 170.
- For other specifications, refer to page 157.

Specifications

Action	Single acting, Spring return	Single acting, Spring extend
Bore size (mm)	ø20, ø25, ø32, ø40	
Max. operating pressure	1.0 MPa	
Min. operating pressure	0.18 MPa	0.23 MPa
Cushion	Rubber bumper	
Piping	Built-in One-touch fitting	
Piston speed	50 to 750 mm/s	
Mounting	Basic style, Axial foot style, Rod side flange style, Head side flange style, Single clevis style, Double clevis style, Rod side trunnion style, Head side trunnion style, Clevis integrated style, Boss-cut style	

∗ Auto switch can be mounted.

Applicable Tubing O.D./I.D.

Bore size (mm)	20	25	32	40
Applicable tubing O.D./I.D. (mm)	6/4	6/4	6/4	8/6
Applicable tubing material	Can be used for either nylon, soft nylon or polyurethane tubing.			

⚠ Caution

1. One-touch fitting cannot be replaced.
   • One-touch fitting is press-fit into the cover, thus cannot be replaced.
2. Refer to Fittings and Tubing Precautions (Best Pneumatics No. 6) for handling one-touch fittings.

Copper/Fluorine-free

20-CM2 | **Mounting style** | **Bore size** – **Stroke** | **Action**

Copper/fluorine-free

The type which prevents copper based ions from generating by changing the copper based materials into electroless nickel plated treatment or non-copper materials in order to eliminate the effects by copper based ions or fluororesins over the color cathode ray tube.



Specifications

Action	Single acting, Spring return	Single acting, Spring extend
Bore size (mm)	ø20, ø25, ø32, ø40	
Max. operating pressure	1.0 MPa	
Min. operating pressure	0.18 MPa	0.23 MPa
Cushion	Rubber bumper	
Piston speed	50 to 750 mm/s	
Mounting	Basic style, Axial foot style, Rod side flange style, Head side flange style, Single clevis style, Double clevis style, Rod side trunnion style, Head side trunnion style, Clevis integrated style, Boss-cut style	

∗ Auto switch can be mounted.

Construction



∗ The above shows the case of single acting, spring return type.

⚠ Precautions

Be sure to read before handling. Refer to front matters 54 and 55 for Safety Instructions and pages 3 to 11 for Actuator and Auto Switch Precautions.

Operating Precoutions

⚠Warning

1. Do not rotate the cover.
If a cover is rotated when installing a cylinder or screwing a fitting into the port, it is likely to damage the junction part with cover.

⚠Caution

1. Not able to disassemble.
Cover and cylinder tube are connected to each other by caulking method, thus making it impossible to disassemble. Therefore, internal parts of a cylinder other than rod seal are not replaceable.

2. Use caution to the popping of a retaining ring.
When replacing rod seals and removing and mounting a retaining ring, use a proper tool (retaining ring plier: tool for installing a type C retaining ring). Even if a proper tool is used, it is likely to inflict damage to a human body or peripheral equipment, as a retaining ring may be flown out of the tip of a plier. Be much careful with the popping of a retaining ring. Besides, be certain that a retaining ring is placed firmly into the groove of rod cover before supplying air at the time of installment.

3. Do not touch the cylinder during operation.
Use caution when handling a cylinder, which is running at a high speed and a high frequency, because the surface of a cylinder tube could get so hot enough as to cause you get burned.

4. One-touch fitting cannot be replaced.
One-touch fitting is press-fit into the cover, thus cannot be replaced.

Construction

Spring return

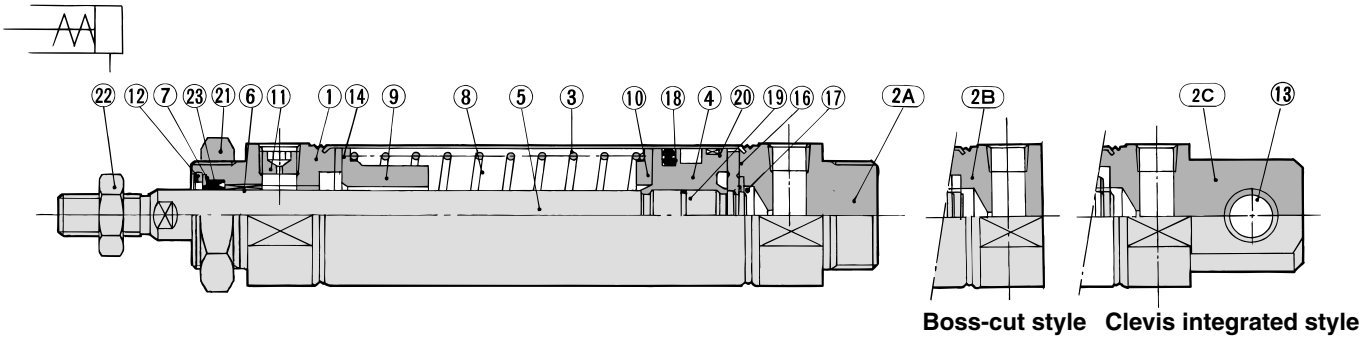

Spring return, Built-in One-touch fitting

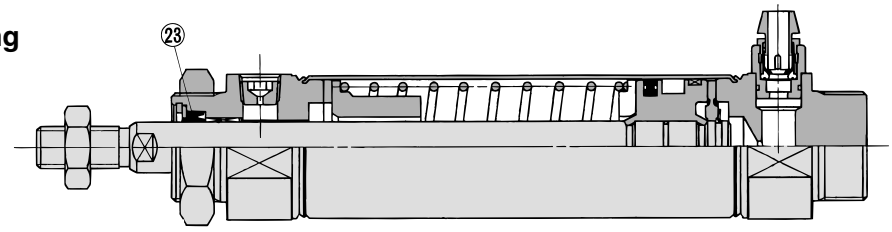

Spring extend

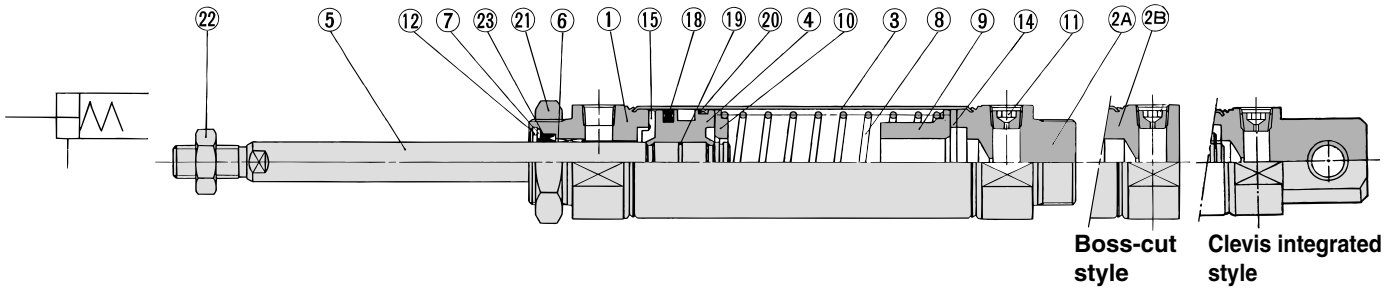

Spring extend, Built-in One-touch fitting

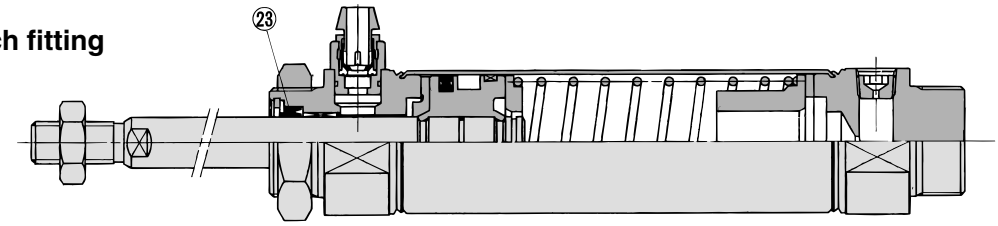

Component Parts

No.	Description	Material	Note
1	**Rod cover**	Aluminum alloy	Clear anodized
2A	**Head cover A**	Aluminum alloy	Clear anodized *
2B	**Head cover B**	Aluminum alloy	Clear anodized **
2C	**Head cover C**	Aluminum alloy	Clear anodized ***
3	**Cylinder tube**	Stainless steel	
4	**Piston**	Aluminum alloy	Chromated
5	**Piston rod**	Carbon steel	Hard chromium electroplated
6	**Bushing**	Copper oil-impregnated sintered alloy	
7	**Seal retainer**	Stainless steel	
8	**Return spring**	Steel wire	Zinc chromated
9	**Spring guide**	Aluminum alloy	Chromated
10	**Spring seat**	Aluminum alloy	Chromated
11	**Plug with fixed orifice**	Alloy steel	Black zinc chromated
12	**Retaining ring**	Carbon steel	Phosphate coated

* Basic style, ** Boss-cut style, *** Clevis integrated style

No.	Description	Material	Note
13	**Clevis bushing**	Copper oil-impregnated sintered alloy	
14	**Bumper**	Urethane	
15	**Bumper A**	Urethane	
16	**Bumper B**	Urethane	
17	**Retaining ring**	Stainless steel	
18	**Piston seal**	NBR	
19	**Piston gasket**	NBR	
20	**Wear ring**	Resin	
21	**Mounting nut**	Carbon steel	Nickel plated
22	**Rod end nut**	Carbon steel	Nickel plated

Replacement Part: Seal

●With Rubber Bumper, Built-in One-touch Fitting

No.	Description	Material	Part no.			
			20	25	32	40
23	**Rod seal**	NBR	PDU-8Z	PDU-10Z	PDU-12LZ	PDU-14LZ

* Since the seal kit does not include a grease pack, order it separately.
Grease pack part no.: GR-S-010 (10 g)

Basic Style (B)

CM2B Bore size — Stroke S T

Spring return

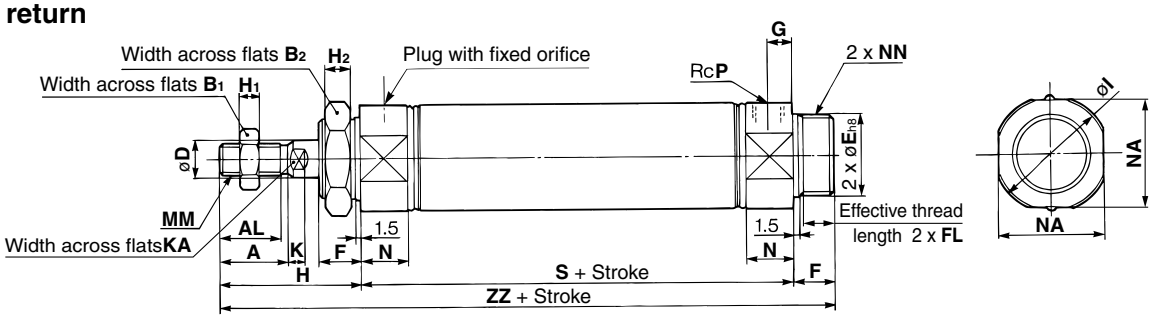

Spring extend

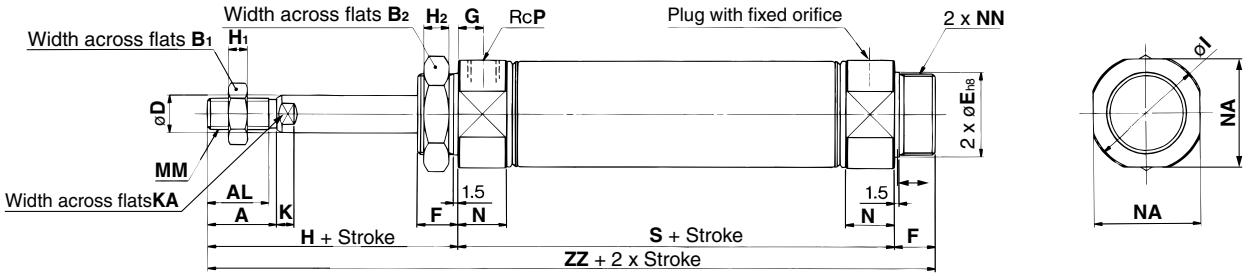

Boss-cut style

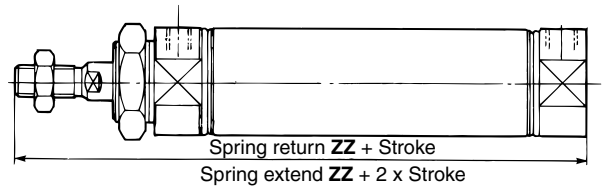

Built-in One-touch fittings

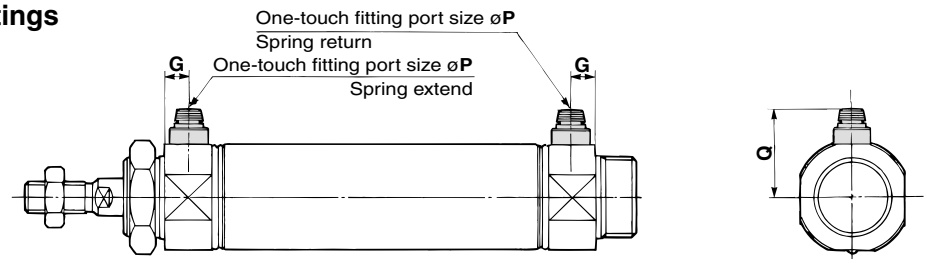

(mm)

Bore size (mm)	A	AL	B1	B2	D	E	F	FL	G	H	H1	H2	I	K	KA	MM	N	NA	NN	P
20	18	15.5	13	26	8	$20^{0}_{-0.033}$	13	10.5	8	41	5	8	28	5	6	M8 x 1.25	15	24	M20 x 1.5	1/8
25	22	19.5	17	32	10	$26^{0}_{-0.033}$	13	10.5	8	45	6	8	33.5	5.5	8	M10 x 1.25	15	30	M26 x 1.5	1/8
32	22	19.5	17	32	12	$26^{0}_{-0.033}$	13	10.5	8	45	6	8	37.5	5.5	10	M10 x 1.25	15	34.5	M26 x 1.5	1/8
40	24	21	22	41	14	$32^{0}_{-0.039}$	16	13.5	11	50	8	10	46.5	7	12	M14 x 1.5	21.5	42.5	M32 x 2	1/4

Dimensions by Stroke

(mm)

Bore size (mm) \ Stroke / Symbol	1 to 50		51 to 100		101 to 150		151 to 200		201 to 250	
	S	**ZZ**	**S**	**ZZ**	**S**	**ZZ**	**S**	**ZZ**	**S**	**ZZ**
20	87	141	112	166	137	191	—	—	—	—
25	87	145	112	170	137	195	—	—	—	—
32	89	147	114	172	139	197	164	222	—	—
40	113	179	138	204	163	229	188	254	213	279

Boss-cut Style

(mm)

Bore size (mm) \ Stroke / Symbol	1 to 50	51 to 100	101 to 150	151 to 200	201 to 250
	ZZ	**ZZ**	**ZZ**	**ZZ**	**ZZ**
20	128	153	178	—	—
25	132	157	182	—	—
32	134	159	184	209	—
40	163	188	213	238	263

Built-in One-touch Fittings (mm)

Bore size (mm)	G	P	Q
20	8	6	21.5
25	8	6	24.5
32	8	6	27
40	11	8	32.5

Axial Foot Style (L)

CM2L **Bore size** — **Stroke** S T

Spring return

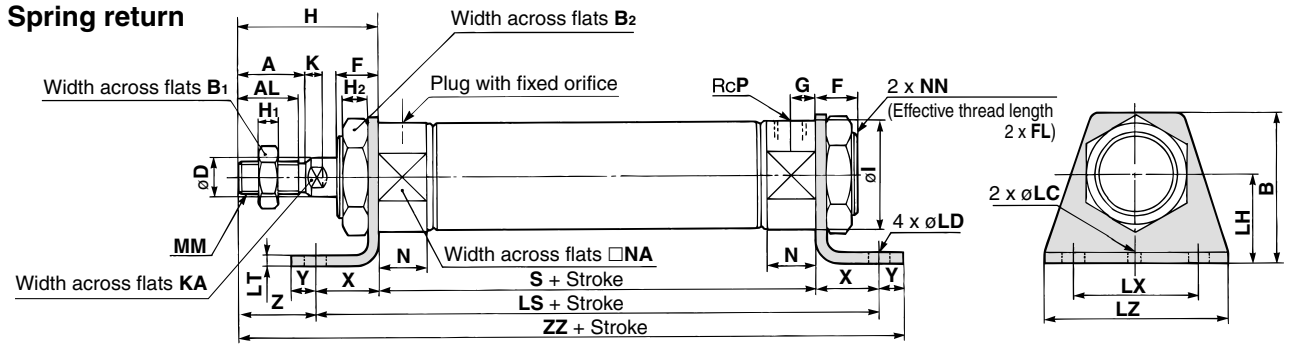

Spring extend

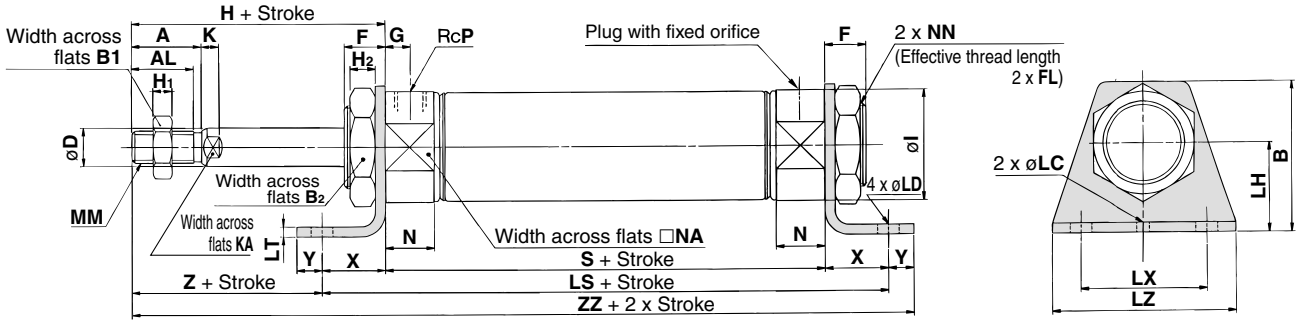

Built-in One-touch fittings

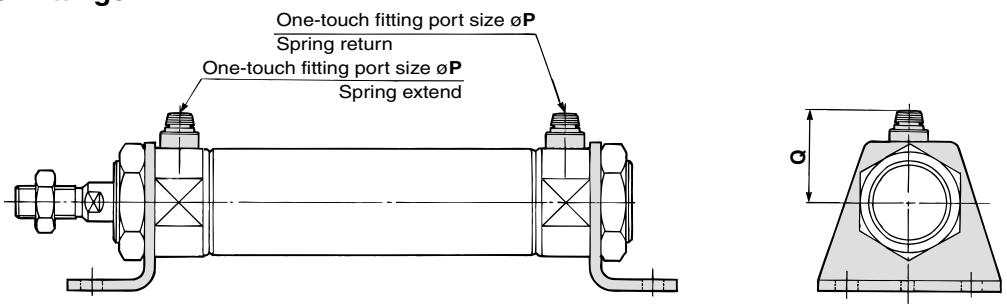

(mm)

Bore size (mm)	A	AL	B	B_1	B_2	D	F	FL	G	H	H_1	H_2	I	K	KA	LC	LD	LH	LT	LX	LZ	MM	N	NA	NN	P	X	Y	Z
20	18	15.5	40	13	26	8	13	10.5	8	41	5	8	28	5	6	4	6.8	25	3.2	40	55	M8 x 1.25	15	24	M20 x 1.5	1⁄8	20	8	21
25	22	19.5	47	17	32	10	13	10.5	8	45	6	8	33.5	5.5	8	4	6.8	28	3.2	40	55	M10 x 1.25	15	30	M26 x 1.5	1⁄8	20	8	25
32	22	19.5	47	17	32	12	13	10.5	8	45	6	8	37.5	5.5	10	4	6.8	28	3.2	40	55	M10 x 1.25	15	34.5	M26 x 1.5	1⁄8	20	8	25
40	24	21	54	22	41	14	16	13.5	11	50	8	10	46.5	7	12	4	7	30	3.2	55	75	M14 x 1.5	21.5	42.5	M32 x 2	1⁄4	23	10	27

Dimensions by Stroke

(mm)

Bore size (mm) \ Stroke / Symbol	1 to 50			51 to 100			101 to 150			151 to 200			201 to 250		
	LS	***S***	**ZZ**	**LS**	**S**	**ZZ**	**LS**	**S**	**ZZ**	**LS**	**S**	**ZZ**	**LS**	**S**	**ZZ**
20	127	87	156	152	112	181	177	137	206	—	—	—	—	—	—
25	127	87	160	152	112	185	177	137	210	—	—	—	—	—	—
32	129	89	162	154	114	187	179	139	212	204	164	237	—	—	—
40	159	113	196	184	138	221	209	163	246	234	188	271	259	213	296

Built-in One-touch Fittings (mm)

Bore size (mm)	P	Q
20	6	21.5
25	6	24.5
32	6	27
40	8	32.5

Rod Side Flange Style (F)

CM2F Bore size — Stroke S T

Spring return

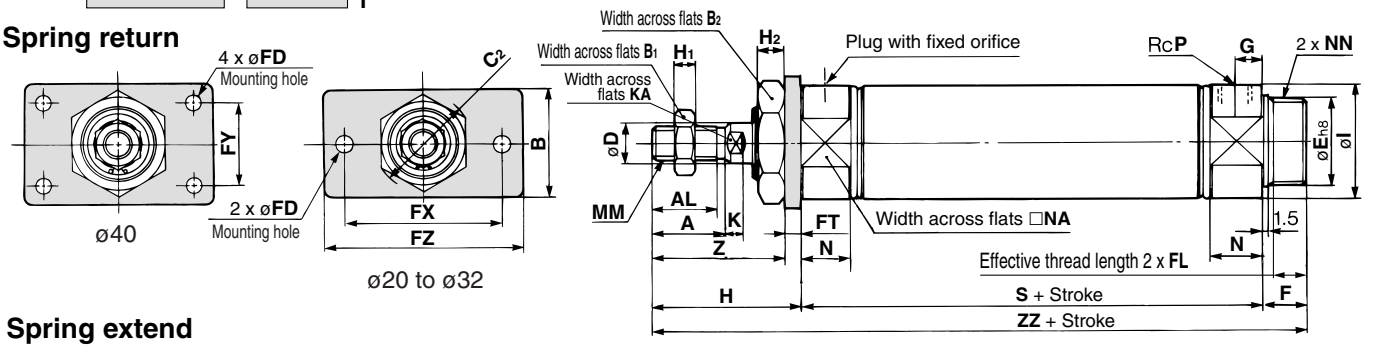

Spring extend

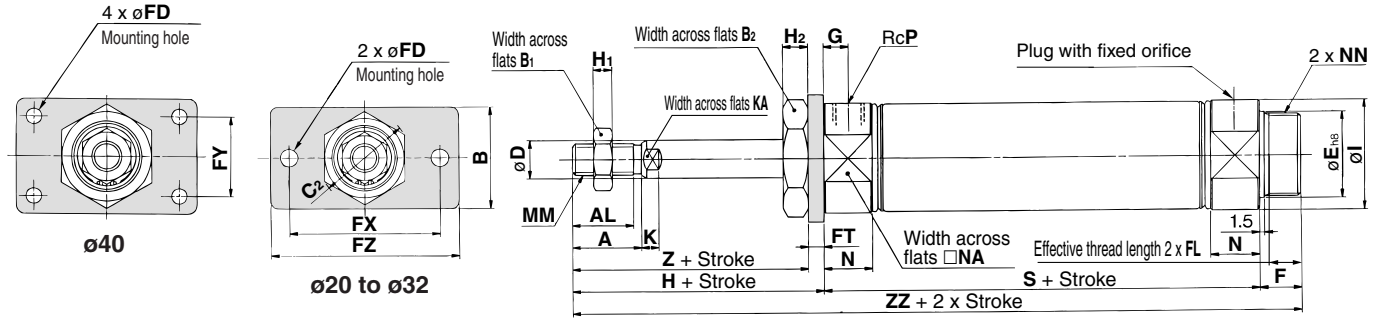

Boss-cut style

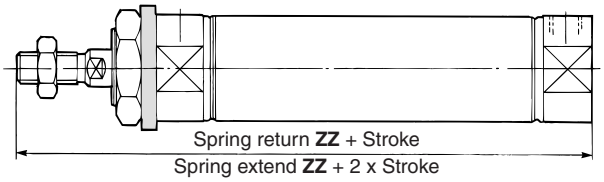

Built-in One-touch fittings

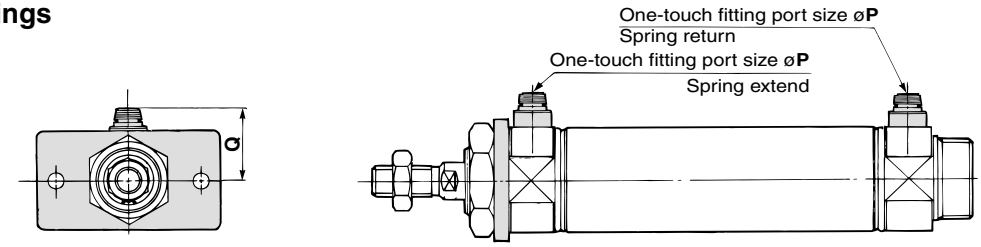

(mm)

Bore size (mm)	A	AL	B	B_1	B_2	C_2	D	E	F	FD	FL	FT	FX	FY	FZ	G	H	H_1	H_2	I	K	KA	MM	N	NA	NN	P	Z
20	18	15.5	34	13	26	30	8	$20^{0}_{-0.033}$	13	7	10.5	4	60	—	75	8	41	5	8	28	5	6	M8 x 1.25	15	24	M20 x 1.5	1/8	37
25	22	19.5	40	17	32	37	10	$26^{0}_{-0.033}$	13	7	10.5	4	60	—	75	8	45	6	8	33.5	5.5	8	M10 x 1.25	15	30	M26 x 1.5	1/8	41
32	22	19.5	40	17	32	37	12	$26^{0}_{-0.033}$	13	7	10.5	4	60	—	75	8	45	6	8	37.5	5.5	10	M10 x 1.25	15	34.5	M26 x 1.5	1/8	41
40	24	21	52	22	41	47.3	14	$32^{0}_{-0.039}$	16	7	13.5	5	66	36	82	11	50	8	10	46.5	7	12	M14 x 1.5	21.5	42.5	M32 x 2	1/4	45

Dimensions by Stroke

(mm)

Bore size (mm) \ Stroke / Symbol	1 to 50		51 to 100		101 to 150		151 to 200		201 to 250	
	S	**ZZ**	**S**	**ZZ**	**S**	**ZZ**	**S**	**ZZ**	**S**	**ZZ**
20	87	141	112	166	137	191	—	—	—	—
25	87	145	112	170	137	195	—	—	—	—
32	89	147	114	172	139	197	164	222	—	—
40	113	179	138	204	163	229	188	254	213	279

Boss-cut Style

(mm)

Bore size (mm) \ Stroke / Symbol	1 to 50	51 to 100	101 to 150	151 to 200	201 to 250
	ZZ	**ZZ**	**ZZ**	**ZZ**	**ZZ**
20	128	153	178	—	—
25	132	157	182	—	—
32	134	159	184	209	—
40	163	188	213	238	263

Built-in One-touch Fittings (mm)

Bore size (mm)	P	Q
20	6	21.5
25	6	24.5
32	6	27
40	8	32.5

Head Side Flange Style (G)

CM2G **Bore size** — **Stroke** S T

Spring return

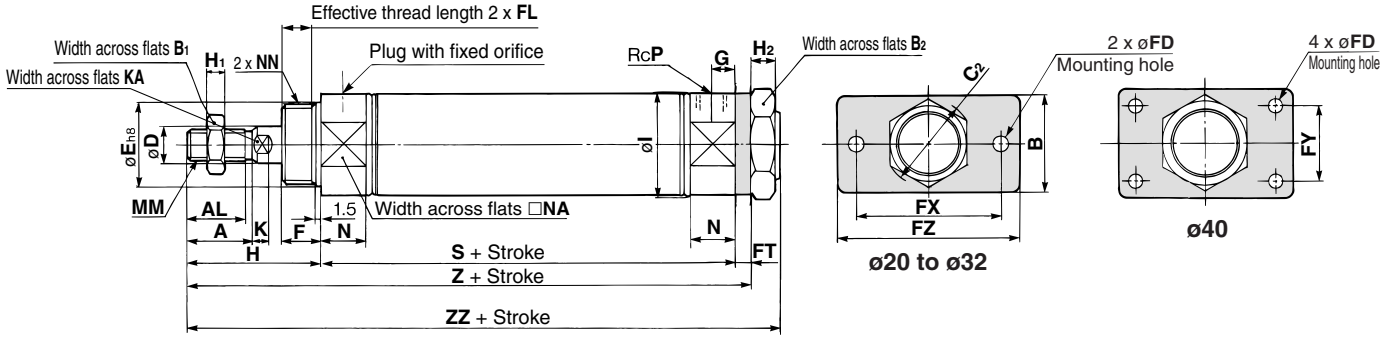

Spring extend

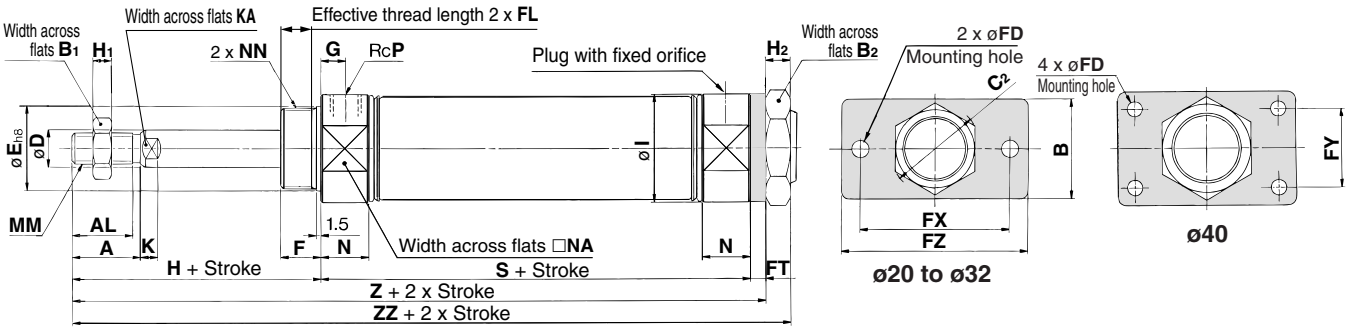

Built-in One-touch fittings

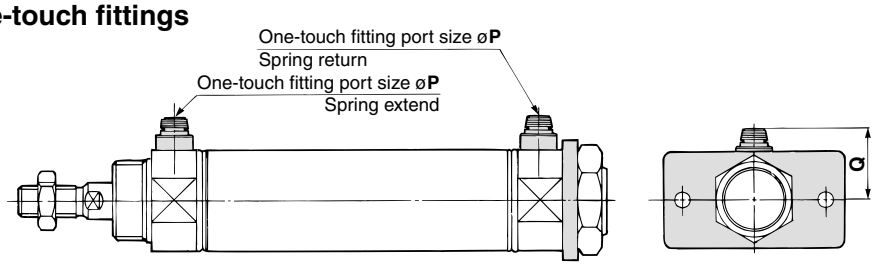

(mm)

Bore size (mm)	A	AL	B	B_1	B_2	C_2	D	E	F	FD	FL	FT	FX	FY	FZ	G	H	H_1	H_2	I	K	KA	MM	N	NA	NN	P
20	18	15.5	34	13	26	30	8	$20^{0}_{-0.033}$	13	7	10.5	4	60	—	75	8	41	5	8	28	5	6	M8 x 1.25	15	24	M20 x 1.5	1/8
25	22	19.5	40	17	32	37	10	$26^{0}_{-0.033}$	13	7	10.5	4	60	—	75	8	45	6	8	33.5	5.5	8	M10 x 1.25	15	30	M26 x 1.5	1/8
32	22	19.5	40	17	32	37	12	$26^{0}_{-0.033}$	13	7	10.5	4	60	—	75	8	45	6	8	37.5	5.5	10	M10 x 1.25	15	34.5	M26 x 1.5	1/8
40	24	21	52	22	41	47.3	14	$32^{0}_{-0.039}$	16	7	13.5	5	66	36	82	11	50	8	10	46.5	7	12	M14 x 1.5	21.5	42.5	M32 x 2	1/4

Dimensions by Stroke

(mm)

Bore size (mm) \ Stroke / Symbol	1 to 50			51 to 100			101 to 150			151 to 200			201 to 250		
	S	**Z**	**ZZ**	**S**	**Z**	**ZZ**	**S**	**Z**	**ZZ**	**S**	**Z**	**ZZ**	**S**	**Z**	**ZZ**
20	87	132	141	112	157	166	137	182	191	—	—	—	—	—	—
25	87	136	145	112	161	170	137	186	195	—	—	—	—	—	—
32	89	138	147	114	163	172	139	188	197	164	213	222	—	—	—
40	113	168	179	138	193	204	163	218	229	188	243	254	213	268	279

Built-in One-touch Fittings (mm)

Bore size (mm)	P	Q
20	6	21.5
25	6	24.5
32	6	27
40	8	32.5

Single Clevis Style (C)

CM2C **Bore size** — **Stroke** S T

Spring return

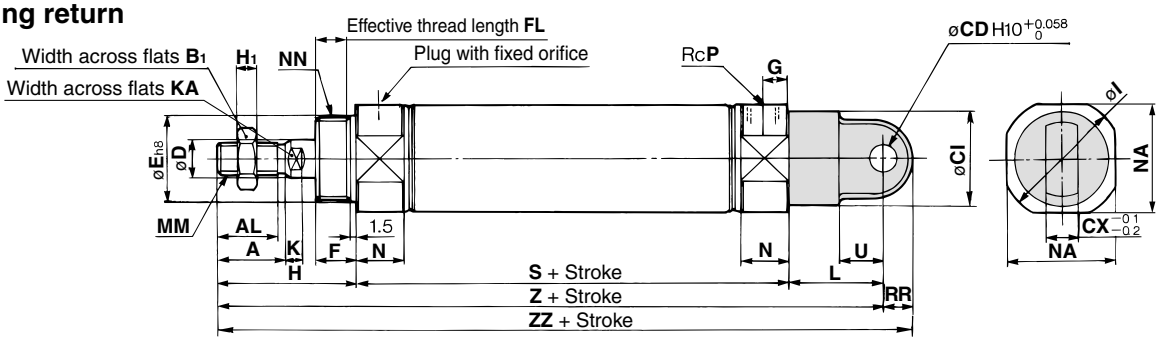

Spring extend

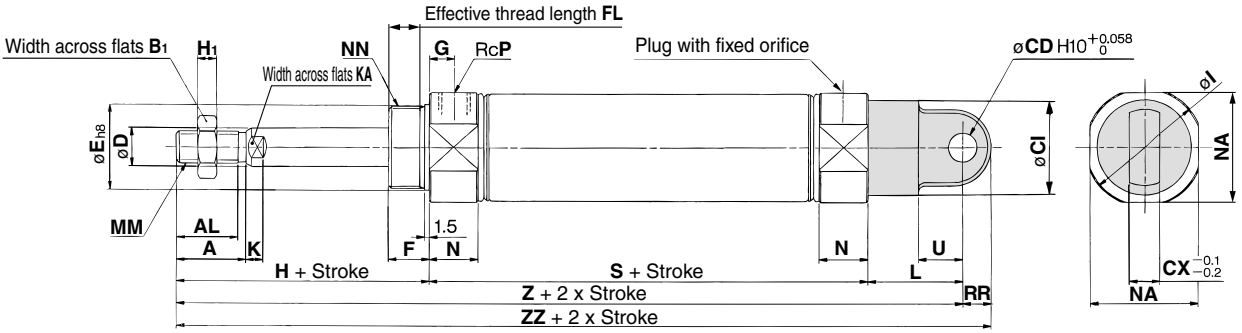

Built-in One-touch fittings

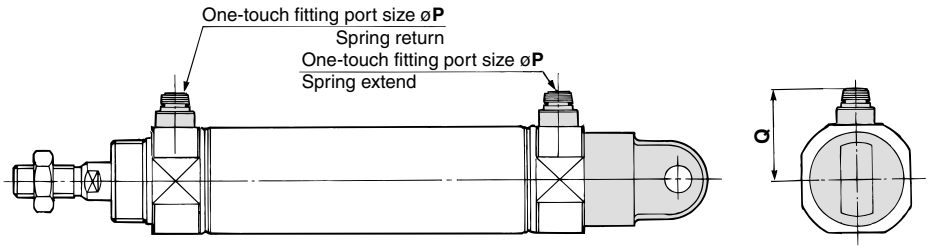

(mm)

Bore size (mm)	A	AL	B1	CD	CI	CX	D	E	F	FL	G	H	H1	I	K	KA	L	MM	N	NA	NN	P	RR	U
20	18	15.5	13	9	24	10	8	20 0 −0.033	13	10.5	8	41	5	28	5	6	30	M8 x 1.25	15	24	M20 x 1.5	1/8	9	14
25	22	19.5	17	9	30	10	10	26 0 −0.033	13	10.5	8	45	6	33.5	5.5	8	30	M10 x 1.25	15	30	M26 x 1.5	1/8	9	14
32	22	19.5	17	9	30	10	12	26 0 −0.033	13	10.5	8	45	6	37.5	5.5	10	30	M10 x 1.25	15	34.5	M26 x 1.5	1/8	9	14
40	24	21	22	10	38	15	14	32 0 −0.039	16	13.5	11	50	8	46.5	7	12	39	M14 x 1.5	21.5	42.5	M32 x 2	1/4	11	18

Dimensions by Stroke

(mm)

Bore size (mm) \ Stroke / Symbol	1 to 50			51 to 100			101 to 150			151 to 200			201 to 250		
	S	Z	ZZ	S	Z	ZZ	S	Z	ZZ	S	Z	ZZ	S	Z	ZZ
20	87	158	167	112	183	192	137	208	217	—	—	—	—	—	—
25	87	162	171	112	187	196	137	212	221	—	—	—	—	—	—
32	89	164	173	114	189	198	139	214	223	164	239	248	—	—	—
40	113	202	213	138	227	238	163	252	263	188	277	288	213	302	313

Built-in One-touch Fittings (mm)

Bore size (mm)	P	Q
20	6	21.5
25	6	24.5
32	6	27
40	8	32.5

Double Clevis Style (D)

CM2D **Bore size** — **Stroke** S T

Spring return

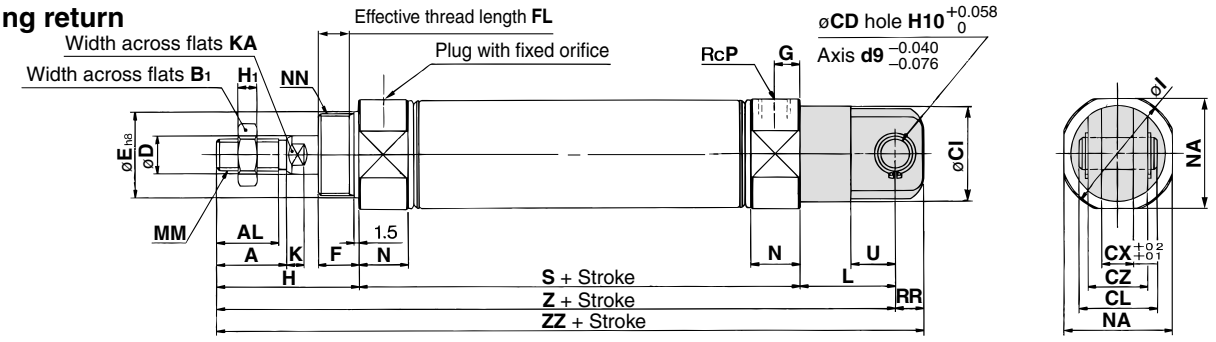

Spring extend

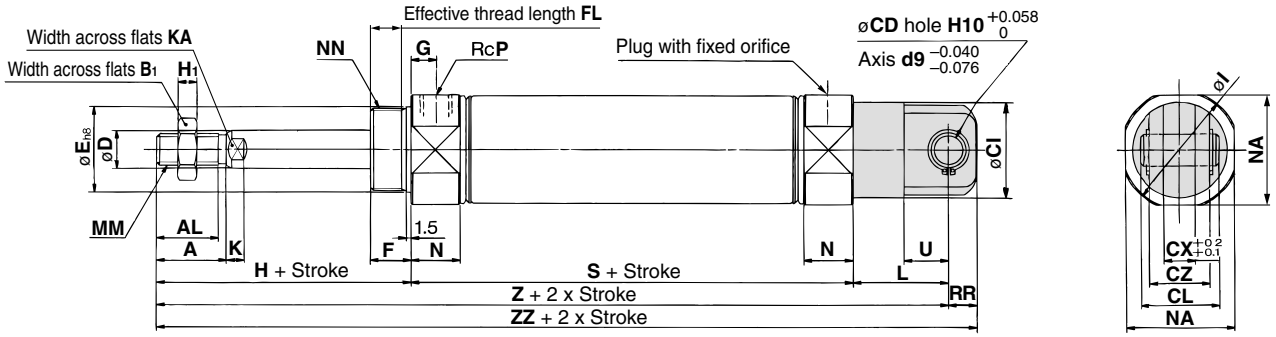

Built-in One-touch fittings

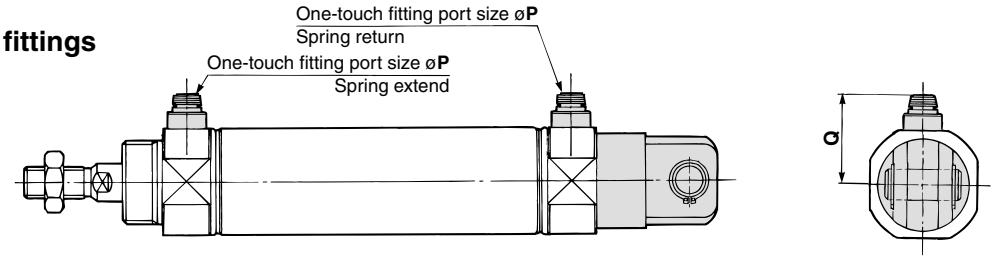

(mm)

Bore size (mm)	A	AL	B1	CD	CI	CL	CX	CZ	D	E	F	FL	G	H	H1	I	K	KA	L	MM	N	NA	NN	P	RR	U
20	18	15.5	13	9	24	25	10	19	8	20 0 −0.033	13	10.5	8	41	5	28	5	6	30	M8 x 1.25	15	24	M20 x 1.5	1/8	9	14
25	22	19.5	17	9	30	25	10	19	10	26 0 −0.033	13	10.5	8	45	6	33.5	5.5	8	30	M10 x 1.25	15	30	M26 x 1.5	1/8	9	14
32	22	19.5	17	9	30	25	10	19	12	26 0 −0.033	13	10.5	8	45	6	37.5	5.5	10	30	M10 x 1.25	15	34.5	M26 x 1.5	1/8	9	14
40	24	21	22	10	38	41.2	15	30	14	32 0 −0.039	16	13.5	11	50	8	46.5	7	12	39	M14 x 1.5	21.5	42.5	M32 x 2	1/4	11	18

Dimensions by Stroke

(mm)

Bore size (mm) \ Stroke / Symbol	1 to 50			51 to 100			101 to 150			151 to 200			201 to 250		
	S	**Z**	**ZZ**	**S**	**Z**	**ZZ**	**S**	**Z**	**ZZ**	**S**	**Z**	**ZZ**	**S**	**Z**	**ZZ**
20	87	158	167	112	183	192	137	208	217	—	—	—	—	—	—
25	87	162	171	112	187	196	137	212	221	—	—	—	—	—	—
32	89	164	173	114	189	198	139	214	223	164	239	248	—	—	—
40	113	202	213	138	227	238	163	252	263	188	277	288	213	302	313

Built-in One-touch Fittings (mm)

Bore size (mm)	P	Q
20	6	21.5
25	6	24.5
32	6	27
40	8	32.5

Rod Side Trunnion Style (U)

CM2U **Bore size** — **Stroke** S T

Spring return

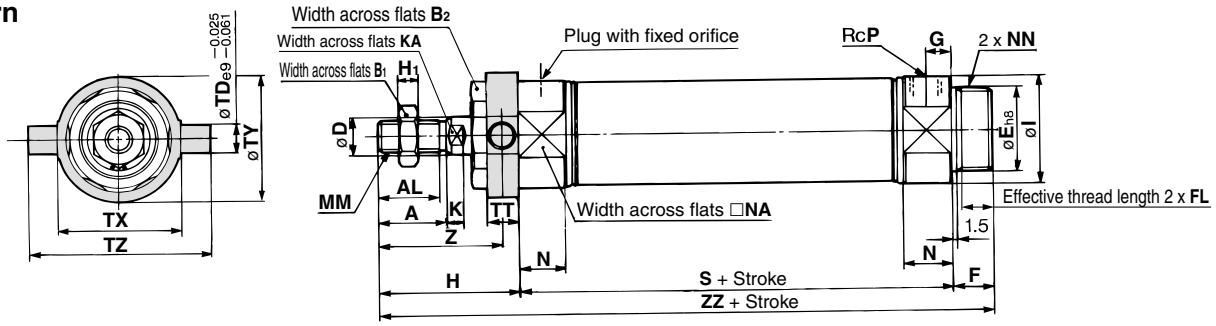

Spring extend

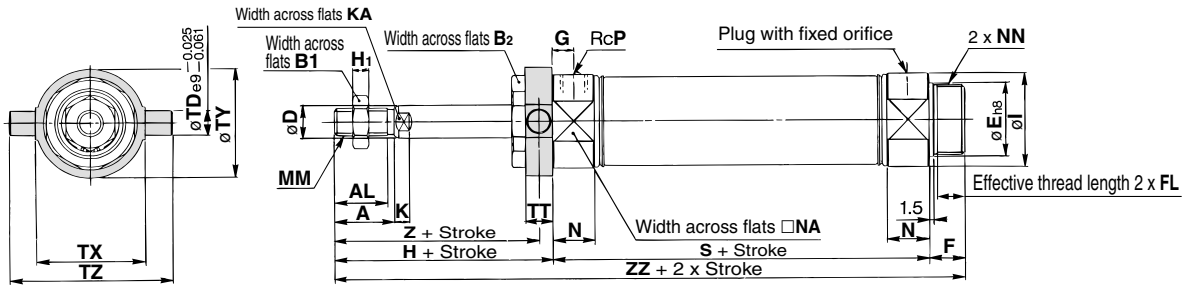

Boss-cut style

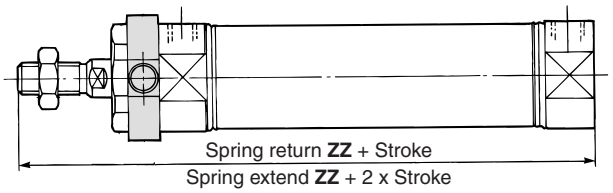

Built-in One-touch fittings

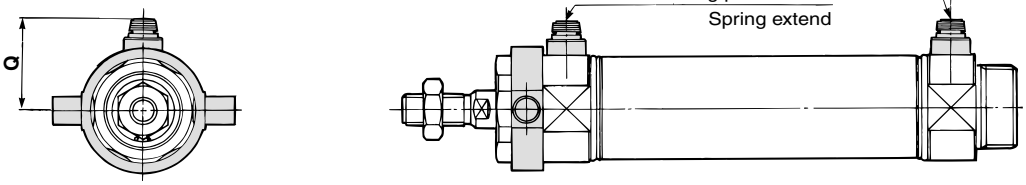

(mm)

Bore size (mm)	A	AL	B_1	B_2	D	E	F	FL	G	H	H_1	I	K	KA	MM	N	NA	NN	P	TD	TT	TX	TY	TZ	Z
20	18	15.5	13	26	8	$20^{0}_{-0.033}$	13	10.5	8	41	5	28	5	6	M8 x 1.25	15	24	M20 x 1.5	1/8	8	10	32	32	52	36
25	22	19.5	17	32	10	$26^{0}_{-0.033}$	13	10.5	8	45	6	33.5	5.5	8	M10 x 1.25	15	30	M26 x 1.5	1/8	9	10	40	40	60	40
32	22	19.5	17	32	12	$26^{0}_{-0.033}$	13	10.5	8	45	6	37.5	5.5	10	M10 x 1.25	15	34.5	M26 x 1.5	1/8	9	10	40	40	60	40
40	24	21	22	41	14	$32^{0}_{-0.039}$	16	13.5	11	50	8	46.5	7	12	M14 x 1.5	21.5	42.5	M32 x 2	1/4	10	11	53	53	77	44.5

Dimensions by Stroke

(mm)

Bore size (mm) \ Stroke / Symbol	1 to 50		51 to 100		101 to 150		151 to 200		201 to 250	
	S	**ZZ**	**S**	**ZZ**	**S**	**ZZ**	**S**	**ZZ**	**S**	**ZZ**
20	87	141	112	166	137	191	—	—	—	—
25	87	145	112	170	137	195	—	—	—	—
32	89	147	114	172	139	197	164	222	—	—
40	113	179	138	204	163	229	188	254	213	279

Boss-cut Style

(mm)

Bore size (mm) \ Stroke / Symbol	1 to 50	51 to 100	101 to 150	151 to 200	201 to 250
	ZZ	**ZZ**	**ZZ**	**ZZ**	**ZZ**
20	128	153	178	—	—
25	132	157	182	—	—
32	134	159	184	209	—
40	163	188	213	238	263

Built-in One-touch Fittings

(mm)

Bore size (mm)	P	Q
20	6	21.5
25	6	24.5
32	6	27
40	8	32.5

Head Side Trunnion Style (T)

CM2T **Bore size** — **Stroke** S T

Spring return

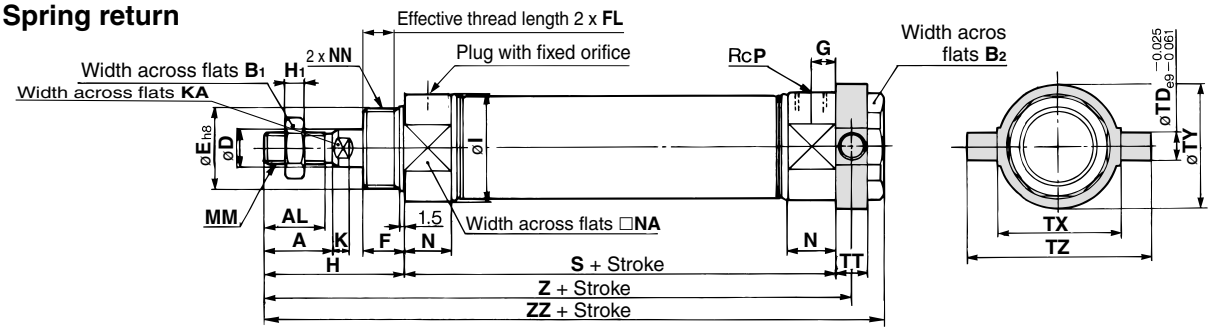

Spring extend

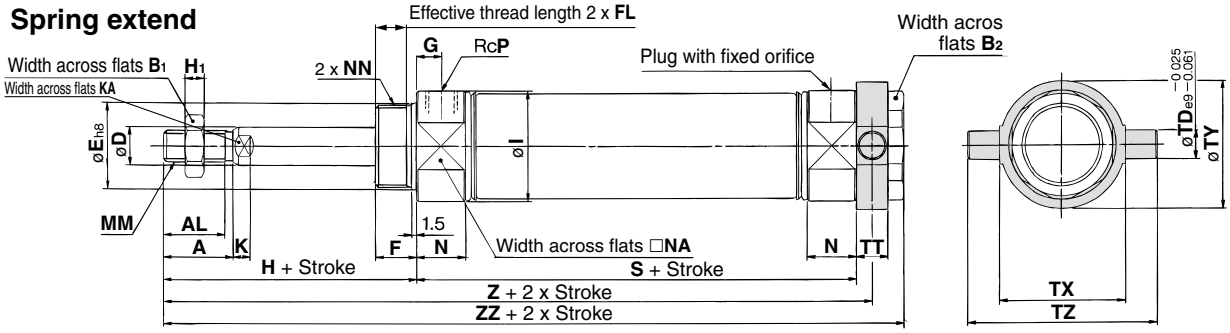

Built-in One-touch fittings

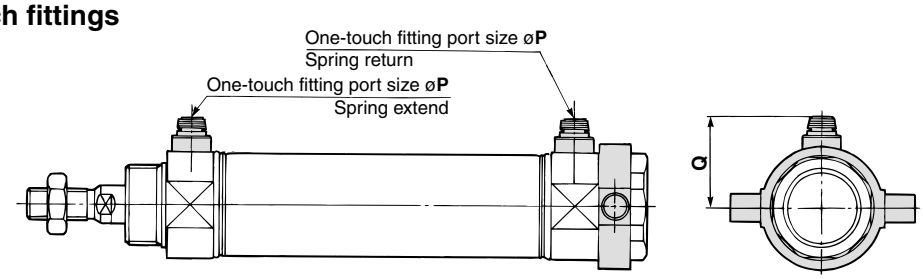

(mm)

Bore size (mm)	A	AL	B1	B2	D	E	F	FL	G	H	H1	I	K	KA	MM	N	NA	NN	P	TD	TT	TX	TY	TZ
20	18	15.5	13	26	8	$20^{0}_{-0.033}$	13	10.5	8	41	5	28	5	6	M8 x 1.25	15	24	M20 x 1.5	1/8	8	10	32	32	52
25	22	19.5	17	32	10	$26^{0}_{-0.033}$	13	10.5	8	45	6	33.5	5.5	8	M10 x 1.25	15	30	M26 x 1.5	1/8	9	10	40	40	60
32	22	19.5	17	32	12	$26^{0}_{-0.033}$	13	10.5	8	45	6	37.5	5.5	10	M10 x 1.25	15	34.5	M26 x 1.5	1/8	9	10	40	40	60
40	24	21	22	41	14	$32^{0}_{-0.039}$	16	13.5	11	50	8	46.5	7	12	M14 x 1.5	21.5	42.5	M32 x 2	1/4	10	11	53	53	77

Dimensions by Stroke

(mm)

Bore size (mm) \ Stroke / Symbol	1 to 50			51 to 100			101 to 150			151 to 200			201 to 250		
	S	**Z**	**ZZ**	**S**	**Z**	**ZZ**	**S**	**Z**	**ZZ**	**S**	**Z**	**ZZ**	**S**	**Z**	**ZZ**
20	87	133	143	112	158	168	137	183	193	—	—	—	—	—	—
25	87	137	147	112	162	172	137	187	197	—	—	—	—	—	—
32	89	139	149	114	164	174	139	189	199	164	214	224	—	—	—
40	113	168.5	179	138	193.5	204	163	218.5	229	188	243.5	254	213	268.5	279

Built-in One-touch Fittings

(mm)

Bore size (mm)	P	Q
20	6	21.5
25	6	24.5
32	6	27
40	8	32.5

Clevis Integrated Style (E)

CM2E **Bore size** — **Stroke** S T

Spring return

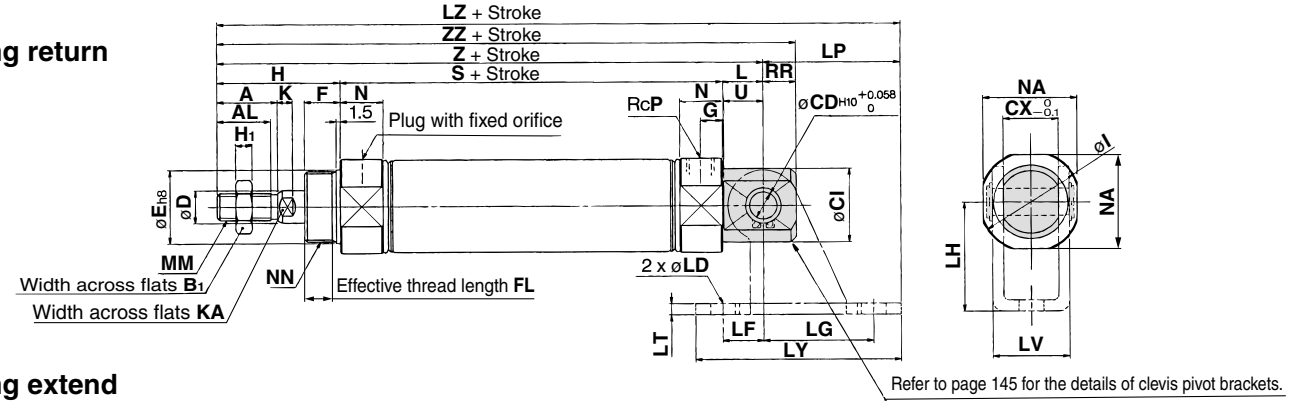

Refer to page 145 for the details of clevis pivot brackets.

Spring extend

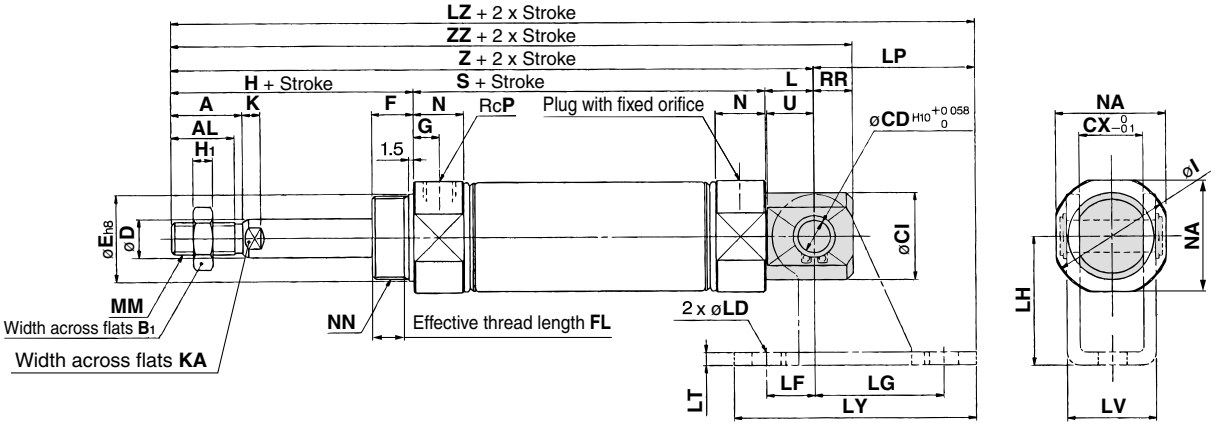

Built-in One-touch fittings

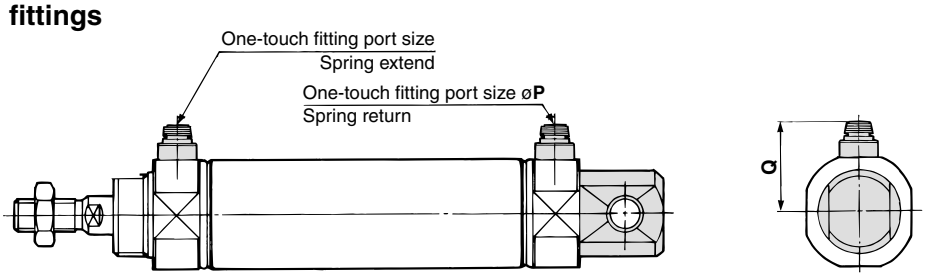

(mm)

Bore size (mm)	A	AL	B1	CD	CI	CX	D	E	F	FL	G	H	H1	I	K	KA	L	MM	N	NA	NN	P	RR	U
20	18	15.5	13	8	20	12	8	20 0 −0.033	13	10.5	8	41	5	28	5	6	12	M8 x 1.25	15	24	M20 x 1.5	1/8	9	11.5
25	22	19.5	17	8	22	12	10	26 0 −0.033	13	10.5	8	45	6	33.5	5.5	8	12	M10 x 1.25	15	30	M26 x 1.5	1/8	9	11.5
32	22	19.5	17	10	27	20	12	26 0 −0.033	13	10.5	8	45	6	37.5	5.5	10	15	M10 x 1.25	15	34.5	M26 x 1.5	1/8	12	14.5
40	24	21	22	10	33	20	14	32 0 −0.039	16	13.5	11	50	8	46.5	7	12	15	M14 x 1.5	21.5	42.5	M32 x 2	1/4	12	14.5

Dimensions by Stroke

(mm)

Bore size (mm) \ Stroke / Symbol	1 to 50			51 to 100			101 to 150			151 to 200			201 to 250		
	S	**Z**	**ZZ**	**S**	**Z**	**ZZ**	**S**	**Z**	**ZZ**	**S**	**Z**	**ZZ**	**S**	**Z**	**ZZ**
20	87	140	149	112	165	174	137	190	199	—	—	—	—	—	—
25	87	144	153	112	169	178	137	194	203	—	—	—	—	—	—
32	89	149	161	114	174	186	139	199	211	164	224	236	—	—	—
40	113	178	190	138	203	215	163	228	240	188	253	265	213	278	290

Clevis Pivot Bracket

(mm)

Bore size (mm)	LD	LF	LG	LH	LP	LT	LV	LY	1 to 50	51 to 100	101 to 150	151 to 200	201 to 250
									LZ	**LZ**	**LZ**	**LZ**	**LZ**
20	6.8	15	30	30	37	3.2	18.4	59	177	202	227	—	—
25	6.8	15	30	30	37	3.2	18.4	59	181	206	231	—	—
32	9	15	40	40	50	4	28	75	199	224	249	274	—
40	9	15	40	40	50	4	28	75	228	253	278	303	328

Built-in One-touch Fittings

(mm)

Bore size (mm)	P	Q
20	6	21.5
25	6	24.5
32	6	27
40	8	32.5

Air Cylinder: Non-rotating Rod Type
Double Acting, Single Rod
Series CM2K
ø20, ø25, ø32, ø40



How to Order

Mounting style

B	Basic style
L	Axial foot style
F	Rod side flange style
G	Head side flange style
C	Single clevis style
D	Double clevis style
U	Rod side trunnion style

T	Head side trunnion style
E	Clevis integrated style
BZ	Boss-cut basic style
FZ	Boss-cut rod side flange style
UZ	Boss-cut rod side trunnion style

Bore size

20	20 mm
25	25mm
32	32 mm
40	40 mm

Cylinder stroke (mm)
(Refer to "Standard Stroke" on page 172.)

Cushion

Nil	Rubber bumper
A	Air cushion

Made to Order
(Refer to page 172 for details.)

CM2K L 40 – 150 A □ – □

With auto switch

CDM2K L 40 – 150 A □ – M9BW □ – □

With auto switch (Built-in magnet)

Rod boot

Nil	None
J	Nylon tarpaulin
K	Heat resistant tarpaulin

Number of auto switches

Nil	2 pcs.
S	1 pc.
n	"n" pcs.

Auto switch

Nil	Without auto switch

∗ For the applicable auto switch model, refer to the table below.

Built-in Magnet Cylinder Model

If a built-in magnet cylinder without an auto switch is required, there is no need to enter the symbol for the auto switch.
(Example) CDM2KF32-100

Applicable Auto Switch/Refer to pages 1263 to 1371 for further information on auto switches.

Type	Special function	Electrical entry	Indicator light	Wiring (Output)	Load voltage DC	Load voltage AC	Auto switch model	Lead wire length (m) 0.5 (Nil)	1 (M)	3 (L)	5 (Z)	None (N)	Pre-wired connector	Applicable load	
Solid state switch	——	Grommet	Yes	3-wire (NPN)	5V, 12V	—	M9N	●	●	●	○	—	○	IC circuit	Relay, PLC
				3-wire (PNP)			M9P	●	●	●	○	—	○		
				2-wire	12V		M9B	●	●	●	○	—	○	—	
		Connector					H7C	●	—	●	●	●	—		
		Terminal conduit		3-wire (NPN)	5V, 12V		G39A **	—	—	—	—	●	—	IC circuit	
				2-wire	12V		K39A **	—	—	—	—	●	—	—	
	Diagnostic indication (2-color indication)	Grommet		3-wire (NPN)	5V,12V		M9NW	●	●	●	○	—	○	IC circuit	
				3-wire (PNP)			M9PW	●	●	●	○	—	○		
				2-wire	12V		M9BW	●	●	●	○	—	○	—	
	Water resistant (2-color indication)						H7BA	—	—	●	○	—	○		
	With diagnostic output (2-color indication)			4-wire (NPN)	5V, 12V		H7NF	●	—	●	○	—	○	IC circuit	
Reed switch	——	Grommet	Yes	3-wire (NPN equivalent)	—	5V	—	A96	●	—	●	—	—	—	IC circuit	—
			No	2-wire	24V	12V	100V	A93	●	—	●	—	—	—	—	Relay, PLC
			Yes				100V or less	A90	●	—	●	—	—	—	IC circuit	
			No				100V, 200V	B54 **	●	—	●	●	—	—	—	
		Connector	Yes				200V or less	B64 **	●	—	●	—	—	—		
			No				—	C73C	●	—	●	●	●	—		
							24V or less	C80C	●	—	●	●	●	—	IC circuit	
		Terminal conduit	Yes				—	A33A **	—	—	—	—	●	—	—	PLC
							100V, 200V	A34A **	—	—	—	—	●	—		Relay, PLC
		DIN terminal						A44A **	—	—	—	—	●	—		
	Diagnostic indication (2-color indication)	Grommet			—	—		B59W	●	—	●	—	—	—		

∗ Lead wire length symbols: 0.5 m ·····Nil (Example) M9NW
1 m ····· M (Example) M9NWM
3 m ····· L (Example) M9NWL
5 m ····· Z (Example) M9NWZ
None ····· N (Example) H7CN

∗ Solid state auto switches marked with "○" are produced upon receipt of order.
∗ D-A9□V/M9□V/M9□WV and D-M9□A(V)L cannot be mounted.
∗ Do not indicate suffix "N" for no lead wire on D-A3□A/A44A/G39A/K39A models.
∗∗ D-A3□A/A44A/G39A/K39A/B54/B64 cannot be mounted on bore sizes ø20 and ø25 cylinder with air cushion.

∗ Since there are other applicable auto switches than listed above, refer to page 218 for details.
∗ For details about auto switches with pre-wired connector, refer to pages 1328 and 1329.
∗ D-A9□/M9□/M9□W auto switches are shipped together (not assembled). (However, auto switch mounting brackets are assembled when being shipped.)

A cylinder which rod does not rotate because of the hexagonal rod shape.

Non-rotating accuracy
ø20, ø25—±0.7°
ø32, ø40—±0.5°

Can operate without lubrication.

The same installation dimensions as the standard cylinder.

Auto switches can also be mounted.

It can be installed with auto switches to simplify the detection of the stroke position of the cylinder.

JIS Symbol

Double acting,
Single rod

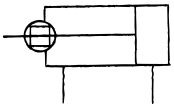

Specifications

Bore size (mm)		20	25	32	40
Rod non-rotating accuracy		±0.7°		±0.5°	
Type		Pneumatic			
Action		Double acting, Single rod			
Fluid		Air			
Cushion		Rubber bumper			
Proof pressure		1.5 MPa			
Maximum operating pressure		1.0 MPa			
Minimum operating pressure		0.05 MPa			
Ambient and fluid temperature		Without auto switch: –10 to 70°C (No freezing) With auto switch: –10 to 60°C (No freezing)			
Lubrication		Not required (Non-lube)			
Stroke length tolerance		$^{+1.4}_{0}$ mm			
Piston speed		50 to 500 mm/s			
Cusion		Rubber bumper, Air cushion			
Allowable kinetic energy	**Rubber bumper**	0.27 J	0.4 J	0.65 J	1.2 J
	Air cushion (Effective cushion length (mm))	0.54 J (11.0)	0.78 J (11.0)	1.27 J (11.0)	2.35 J (11.8)

Standard Stroke

Bore size (mm)	Standard stroke Note) (mm)
20	25, 50, 75, 100, 125, 150 200, 250, 300
25	
32	
40	

Note 1) Other intermediate strokes can be manufactured upon receipt of order.
Manufacture of intermediate strokes at 1 mm intervals is possible. (Spacers are not used.)
Note 2) The maximum limit is 1000 stroke, but the products that exceed the standard stroke might not be able to fulfill the specifications.

Rod Boot Material

Symbol	Rod boot material	Max. ambient temperature
J	Nylon tarpaulin	70°C
K	Heat resistant tarpaulin	110°C *

* Maximum ambient temperature for the rod boot itself.

Made to Order Specifications
(For details, refer to pages 1373 to 1498.)

Symbol	Specifications
—XA□	Change of rod end shape
—XB6	Heat resistant cylinder (150°C)
—XB12	External stainless steel cylinder
—XC3	Special port location
—XC6	Piston rod and rod end nut made of stainless steel
—XC8	Adjustable stroke cylinder/Adjustable extention type
—XC9	Adjustable stroke cylinder/Adjustable retraction type
—XC10	Dual stroke cylinder/Double rod type
—XC11	Dual stroke cylinder/Single rod type
—XC13	Auto switch mounting rail style
—XC20	Head cover axial port
—XC22	Fluororubber seals
—XC25	No fixed orifice of connecting port
—XC27	Double clevis pin and double knuckle pin made of stainless steel
—XC52	Mounting nut with set screw

Mounting Bracket/Part No.

Mounting bracket	Min. order	Bore size (mm) 20	25	32	40	Description (for min. order)
Axial foot *	2	CM-L020B	CM-L032B		CM-L040B	2 foot, 1 mounting nut
Flange	1	CM-F020B	CM-F032B		CM-F040B	1 flange
Single clevis**	1	CM-C020B	CM-C032B		CM-C040B	1 single clevis, 3 liners
Double clevis**** (with pins)	1	CM-D020B	CM-D032B		CM-D040B	1 double clevis, 3 liners, 1 clevis pins, 2 retaining rings
Trunnion (with nuts)	1	CM-T020B	CM-T032B		CM-T040B	1 trunnion, 1 trunnion nut

* Order 2 foot brackets for each cylinder unit.
** 3 Liners are attached with a clevis bracket for adjusting the mounting angle.
*** Clevis pins and retaining rings (cotter pins for ø40) are attached.

Boss-cut style

Boss for the head side cover bracket is eliminated and the total length of cylinder is shortened.



Comparison of the Full Length Dimension (Versus standard type) (mm)

ø20	ø25	ø32	ø40
▲13	▲13	▲13	▲16

Mounting style

■ Boss-cut basic style (BZ) ■ Boss-cut flange style (FZ)
■ Boss-cut trunnion style (UZ)

Refer to pages 214 to 218 for cylinders with auto switches.

- Minimum stroke for auto switch mounting
- Proper auto switch mounting position (detection at stroke end) and mounting height
- Operating range
- Switch mounting bracket: Part no.

Copper/Fluorine-free

20-CM2K **Mounting style** **Bore size** — **Stroke**

Copper/fluorine-free

The type which prevents copper based ions from generating by changing the copper based materials into electroless nickel plated treatment or non-copper materials in order to eliminate the effects by copper based ions or fluororesins over the color cathode ray tube.



Specifications

Action	Double acting, Single rod
Bore size (mm)	ø20, ø25, ø32, ø40
Max. operating pressure	1.0 MPa
Min. operating pressure	0.05 MPa
Cushion	Rubber bumper
Piston speed	50 to 500 mm/s
Mounting	Basic style, Axial foot style, Rod side flange style, Head side flange style, Single clevis style, Double clevis style, Head side trunnion style, Rod side trunnion style, Clevis integrated style, Boss-cut style

Mounting Style and Accessory

Accessory / Mounting	Standard equipment			Option			
	Mounting nut	Rod end nut	Clevis pin	Single knuckle joint	Double knuckle joint (3)	Clevis bracket (4)	Rod boot
Basic style	● (1 pc.)	●	—	●	●	—	●
Axial foot style	● (2)	●	—	●	●	—	●
Rod side flange style	● (1)	●	—	●	●	—	●
Head side flange style	● (1)	●	—	●	●	—	●
Clevis integrated style	— (1)	●	—	●	●	●	●
Single clevis style	— (1)	●	—	●	●	—	●
Double clevis style (3)	— (1)	●	● (5)	●	●	—	●
Rod side trunnion style	● (1) (2)	●	—	●	●	—	●
Head side trunnion style	● (1) (2)	●	—	●	●	—	●
Boss-cut basic style	● (1)	●	—	●	●	—	●
Boss-cut flange style	● (1)	●	—	●	●	—	●
Boss-cut trunnion style	● (1)	●	—	●	●	—	●

Note 1) Mounting nuts are not attached for clevis integrated style, single clevis, and double clevis styles.
Note 2) Trunnion nuts are attached for rod side trunnion and head side trunnion styles.
Note 3) Pin and retaining ring (cotter pin for bore size ø40) are shipped together with double clevis and double knuckle joint.
Note 4) Pin and retaining ring are shipped together with clevis pivot bracket.
Note 5) Clevis pins come with retaining rings (cotter pins for ø40).

Mass

(kg)

	Bore size (mm)	20	25	32	40
Basic mass	Basic style	0.14	0.21	0.28	0.57
	Axial foot style	0.29	0.37	0.44	0.84
	Flange style	0.20	0.30	0.37	0.69
	Clevis integrated style	0.12	0.19	0.27	0.53
	Single clevis style	0.18	0.25	0.32	0.66
	Double clevis style	0.19	0.27	0.33	0.70
	Trunnion style	0.18	0.28	0.34	0.67
	Boss-cut basic style	0.13	0.19	0.26	0.53
	Boss-cut flange style	0.19	0.28	0.35	0.66
	Boss-cut trunnion style	0.17	0.26	0.32	0.63
Additional mass per each 50 mm of stroke		0.04	0.07	0.09	0.14
Option bracket	Clevis bracket (With pin)	0.07	0.07	0.14	0.14
	Single knuckle joint	0.06	0.06	0.06	0.23
	Double knuckle joint (With pin)	0.07	0.07	0.07	0.20

Calculation: (Example) **CM2KL32-100**
- Basic mass·····0.44 (Foot style, ø32)
- Additional mass·····0.09/0.50 stroke
- Cylinder stroke····· 100 stroke

0.44 + 0.09 x 100/50 = 0.62 kg

⚠ Precautions

Be sure to read before handling. Refer to front matters 54 and 55 for Safety Instructions and pages 3 to 11 for Actuator and Auto Switch Precautions.

Operating Precautions

⚠Warning

1. Do not rotate the cover.
If a cover is rotated when installing a cylinder or screwing a fitting into the port, it is likely to damage the junction part with cover.

2. Do not operate with the cushion needle in a fully closed condition.
Using it in the fully closed state will cause the cushion seal to be damaged. When adjusting the cushion needle, use the "Hexagon wrench key: nominal size 1.5".

3. Do not open the cushion needle wide excessively.
If the cushion needle were set to be completely wide (more than 3 turns from fully closed), it would be equivalent to the cylinder with no cushion, thus making the impacts extremely high. Do not use it in such a way. Besides, using with fully open could give damage to the piston or cover.

⚠Caution

1. Avoid using the air cylinder in such a way that rotational torque would be applied to the piston rod.
If rotational torque is applied, the non-rotating guide will become deformed, thus affecting the non-rotating accuracy.
Refer to the table below for the approximate values of the allowable range of rotational torque.

Allowable rotational torque	ø20	ø25	ø32	ø40
(N·m or less)	0.2	0.25	0.25	0.44

To screw a bracket or a nut onto the threaded portion at the tip of the piston rod, make sure to retract the piston rod entirely, and place a wrench over the flat portion of the rod that protrudes.

Tighten it by giving consideration to prevent the tightening torque from being applied to the non-rotating guide.



2. When replacing rod seals, please contact SMC.
Air leakage may be happened, depending on the position in which a rod seal is fitted. Thus, please contact SMC when replacing them.

3. Not able to disassemble.
Cover and cylinder tube are connected to each other by caulking method, thus making it impossible to disassemble. Therefore, internal parts of a cylinder other than rod seal are not replaceable.

4. Do not touch the cylinder during operation.
Use caution when handling a cylinder, which is running at a high speed and a high frequency, because the surface of a cylinder tube could get so hot enough as to cause you get burned.

5. Combine the rod end section, so that a rod boot might not be twisted.
If a rod boot is installed with being twisted when installing a cylinder, it will cause a rod boot to fail during operation.

Construction

Rubber bumper

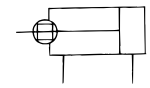

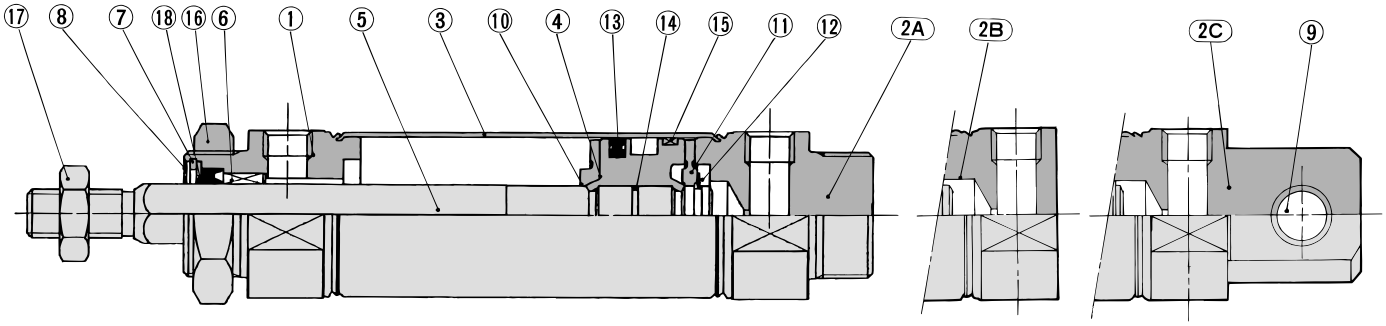

Boss-cut style Clevis integrated style



Rod section

With air cushion

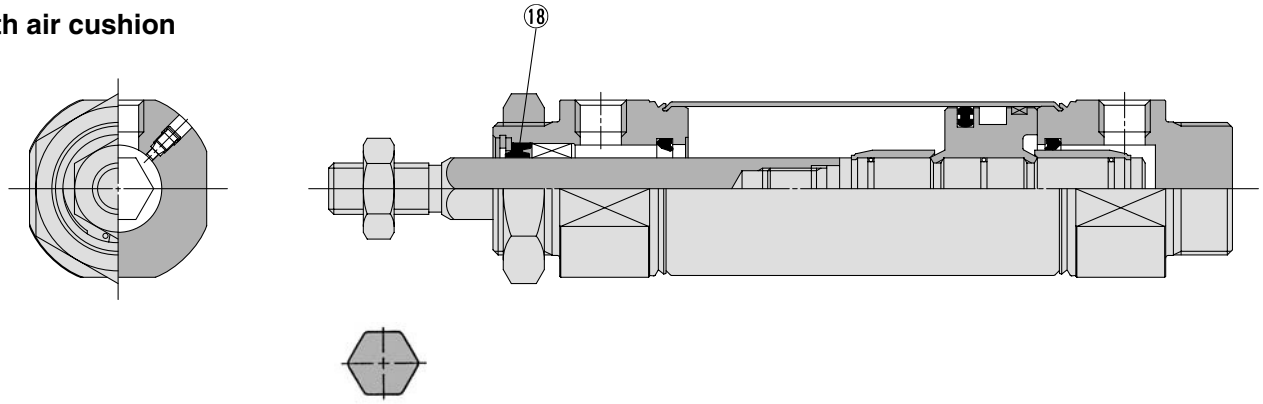

Rod section

Component Parts

No.	Description	Material	Note
1	**Rod cover**	Aluminum alloy	Clear anodized
2A	**Head cover A**	Aluminum alloy	Clear anodized *
2B	**Head cover B**	Aluminum alloy	Clear anodized **
2C	**Head cover C**	Aluminum alloy	Clear anodized ***
3	**Cylinder tube**	Stainless steel	
4	**Piston**	Aluminum alloy	Chromated
5	**Piston rod**	Stainless steel	
6	**Non-rotating guide**	Copper oil-impregnated sintered alloy	
7	**Seal retainer**	Carbon steel	Nickel plated
8	**Retaining ring**	Carbon steel	Phosphate coated
9	**Clevis bushing**	Copper oil-impregnated sintered alloy	
10	**Bumper A**	Urethane	
11	**Bumper B**	Urethane	

∗ Basic style, ∗∗ Boss-cut style, ∗∗∗ Clevis integrated style

No.	Description	Material	Note
12	**Retaining ring**	Stainless steel	
13	**Piston seal**	NBR	
14	**Piston gasket**	NBR	
15	**Wear ring**	Resin	
16	**Mounting nut**	Carbon steel	Nickel plated
17	**Rod end nut**	Carbon steel	Nickel plated

Replacement Part: Seal

With rubber bumper / With air cushion

No.	Description	Material	Part no.			
			20	**25**	**32**	**40**
18	**Rod seal**	NBR	PDR-8W	PDR-10W	PDR-12W	PDR-14W

∗ Since the seal kit does not include a grease pack, order it separately.
Grease pack part no.: **GR-S-010** (10 g)

Basic Style (B)

CM2KB **Bore size** — **Stroke** ☐

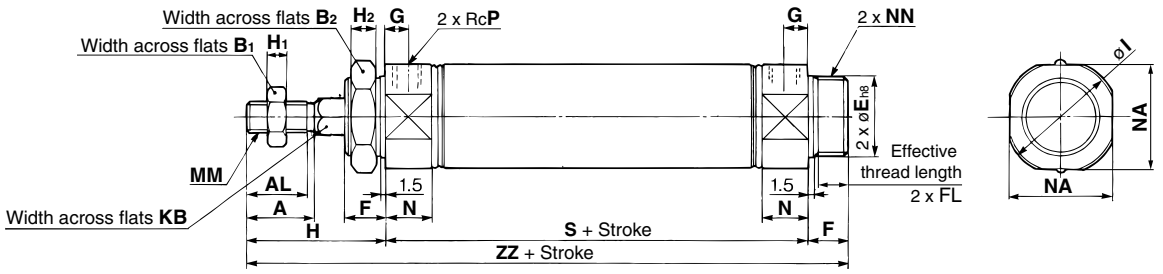

With rod boot

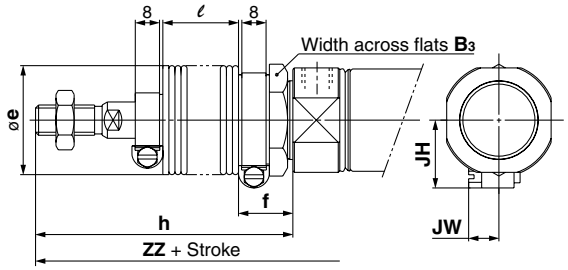

Boss-cut style

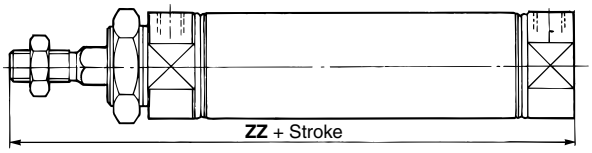

With air cushion

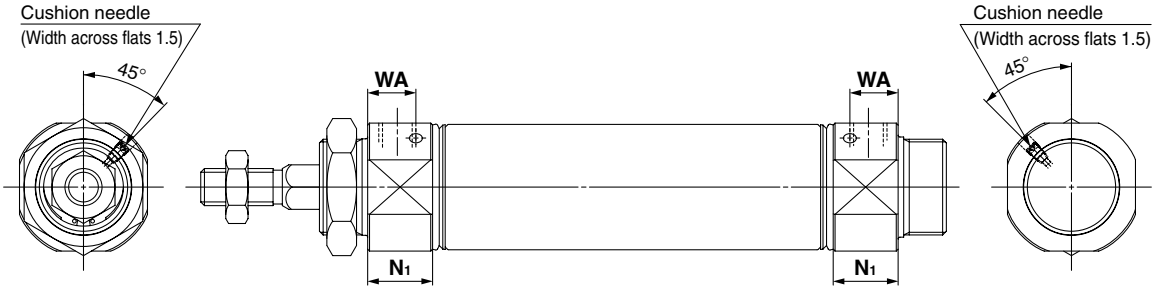

(mm)

Bore size (mm)	A	AL	B1	B2	E	F	FL	G	H	H1	H2	I	KB	MM	N	NA	NN	P	S	ZZ
20	18	15.5	13	26	$20^{0}_{-0.033}$	13	10.5	8	41	5	8	28	8.2	M8 x 1.25	15	24	M20 x 1.5	1/8	62	116
25	22	19.5	17	32	$26^{0}_{-0.033}$	13	10.5	8	45	6	8	33.5	10.2	M10 x 1.25	15	30	M26 x 1.5	1/8	62	120
32	22	19.5	17	32	$26^{0}_{-0.033}$	13	10.5	8	45	6	8	37.5	12.2	M10 x 1.25	15	34.5	M26 x 1.5	1/8	64	122
40	24	21	22	41	$32^{0}_{-0.039}$	16	13.5	11	50	8	10	46.5	14.2	M14 x 1.5	21.5	42.5	M32 x 2	1/4	88	154

With Rod Boot

(mm)

Symbol / Stroke / Bore size (mm)	B3	e	f	h					ℓ					ZZ					JH	JW
				1 to 50	51 to 100	101 to 150	151 to 200	201 to 300	1 to 50	51 to 100	101 to 150	151 to 200	201 to 300	1 to 50	51 to 100	101 to 150	151 to 200	201 to 300		
20	30	36	18	68	81	93	106	131	12.5	25	37.5	50	75	143	156	168	181	206	23.5	10.5
25	32	36	18	72	85	97	110	135	12.5	25	37.5	50	75	147	160	172	185	210	23.5	10.5
32	32	36	18	72	85	97	110	135	12.5	25	37.5	50	75	149	162	174	187	212	23.5	10.5
40	41	46	20	77	90	102	115	140	12.5	25	37.5	50	75	181	194	206	219	244	27	10.5

Boss-cut Style

(mm)

Bore size (mm)	ZZ					
	Without rod boot	With rod boot				
		1 to 50	51 to 100	101 to 150	151 to 200	201 to 300
20	103	130	143	155	168	193
25	107	134	147	159	172	197
32	109	136	149	161	174	199
40	138	165	178	190	203	228

With Air Cushion (mm)

Bore size (mm)	N1	WA
20	17.5	13
25	17.5	13
32	17.5	13
40	21.5	16

Dimensions of Each Mounting Bracket

The dimensions are the same as standard type, double acting, single rod, except the configuration of the piston rod. Refer to pages 136 to 143. Specifications for the auto switch equipped type are the same as Series CDM2 standard type.

Air Cylinder: Non-rotating Rod Type
Double Acting, Double Rod
Series CM2KW
ø20, ø25, ø32, ø40

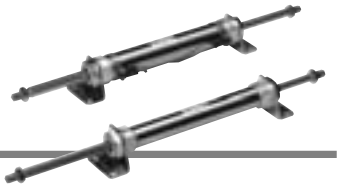

How to Order

Mounting style

B	Basic style
L	Axial foot style
F	Flange style
U	Trunnion style

Cylinder stroke (mm)
(Refer to "Standard Stroke" on page 177.)

Cushion

Nil	Rubber bumper
A	Air cushion

Made to Order
(Refer to page 177 for details.)

CM2KW **L** **40** – **150** **A** – ☐

With auto switch: CDM2KW **L** **40** – **150** **A** – **M9BW** ☐ – ☐

With auto switch (Built-in magnet)

Non-rotating rod type

Bore size

20	20 mm
25	25 mm
32	32 mm
40	40 mm

Number of auto switches

Nil	2 pcs.
S	1 pc.
n	"n" pcs.

Auto switch

Nil	Without auto switch

∗ For the applicable auto switch model, refer to the table below.

Built-in Magnet Cylinder Model

If a built-in magnet cylinder without an auto switch is required, there is no need to enter the symbol for the auto switch.
(Example) CDM2KWF32-100

Applicable Auto Switch/Refer to pages 1263 to 1371 for further information on auto switches.

Type	Special function	Electrical entry	Indicator light	Wiring (Output)	Load voltage DC	Load voltage AC	Auto switch model	Lead wire length (m) 0.5 (Nil)	1 (M)	3 (L)	5 (Z)	None (N)	Pre-wired connector	Applicable load	
Solid state switch	——	Grommet	Yes	3-wire (NPN)	5V, 12V		**M9N**	●	●	●	○	—	○	IC circuit	Relay, PLC
				3-wire (PNP)			**M9P**	●	●	●	○	—	○		
				2-wire	12V		**M9B**	●	●	●	○	—	○	—	
		Connector					**H7C**	●	—	●	●	●	—		
		Terminal conduit		3-wire (NPN)	5V, 12V		**G39A** **	—	—	—	—	●	—	IC circuit	
				2-wire	12V		**K39A** **	—	—	—	—	●	—	—	
	Diagnostic indication (2-color indication)	Grommet		3-wire (NPN)	5V,12V		**M9NW**	●	●	●	○	—	○	IC circuit	
				3-wire (PNP)			**M9PW**	●	●	●	○	—	○		
				2-wire	12V		**M9BW**	●	●	●	○	—	○	—	
	Water resistant (2-color indication)						**H7BA**	—	—	●	○	—	○		
	With diagnostic output (2-color indication)			4-wire (NPN)	5V, 12V		**H7NF**	●	—	●	○	—	○	IC circuit	
Reed switch	——	Grommet	Yes	3-wire (NPN equivalent)	—	5V	—	**A96**	●	—	●	—	—	—	IC circuit	—
				2-wire	24V	12V	100V	**A93**	●	—	●	—	—	—	—	Relay, PLC
			No				100V or less	**A90**	●	—	●	—	—	—	IC circuit	
			Yes				100V, 200V	**B54** **	●	—	●	●	—	—	—	
			No				200V or less	**B64** **	●	—	●	—	—	—		
		Connector	Yes				—	**C73C**	●	—	●	●	●	—	—	
			No				24V or less	**C80C**	●	—	●	●	●	—	IC circuit	
		Terminal conduit	Yes				—	**A33A** **	—	—	—	—	●	—	—	PLC
							100V, 200V	**A34A** **	—	—	—	—	●	—		
		DIN terminal						**A44A** **	—	—	—	—	●	—		Relay, PLC
	Diagnostic indication (2-color indication)	Grommet				—	—	**B59W**	●	—	●	—	—	—		

∗ Lead wire length symbols: 0.5 m ·····Nil (Example) M9NW
1 m ····· M (Example) M9NWM
3 m ····· L (Example) M9NWL
5 m ····· Z (Example) M9NWZ
None ····· N (Example) H7CN

∗ Solid state auto switches marked with "○" are produced upon receipt of order.
∗ D-A9□V/M9□V/M9□WV and D-M9□A(V)L cannot be mounted.
∗ Do not indicate suffix "N" for no lead wire on D-A3□A/A44A/G39A/K39A models.
∗∗ D-A3□A/A44A/G39A/K39A/B54/B64 cannot be mounted on bore sizes ø20 and ø25 cylinder with air cushion.

∗ Since there are other applicable auto switches than listed above, refer to page 218 for details.
∗ For details about auto switches with pre-wired connector, refer to pages 1328 and 1329.
∗ D-A9□/M9□/M9□W auto switches are shipped together (not assembled). (However, auto switch mounting brackets are assembled when being shipped.)

A cylinder which rod does not rotate because of the hexagonal rod shape.

Non-rotating accuracy
ø20, ø25—±0.7°
ø32, ø40—±0.5°

Can operate without lubrication.

The same installation dimensions as the standard cylinder.

Auto switches can also be mounted.
It can be installed with auto switches to simplify the detection of the stroke position of the cylinder.

JIS Symbol
Double acting,
Double rod

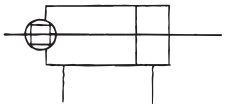

Made to Order Specifications
(For details, refer to pages 1395 to 1498.)

Symbol	Specifications
—XB6	Heat resistant cylinder (150°C)
—XC3	Special port location
—XC6	Piston rod and rod end nut made of stainless steel
—XC13	Auto switch mounting rail style
—XC22	Fluororubber seals
—XC52	Mounting nut with set screw

Specifications

Bore size (mm)	20	25	32	40
Rod non-rotating accuracy	±0.7°		±0.5°	
Action	Pneumatic			
Cushion	Rubber bumper			
Action	Double acting, Double rod			
Fluid	Air			
Proof pressure	1.5 MPa			
Maximum operating pressure	1.0 MPa			
Minimum operating pressure	0.08 MPa			
Ambient and fluid temperature	Without auto switch: –10 to +70°C (No freezing) With auto switch: –10 to +60°C (No freezing)			
Lubrication	Not required (Non-lube)			
Stroke length tolerance	$^{+1.4}_{0}$ mm			
Piston speed	50 to 500 mm/s			
Allowable kinetic energy	0.27 J	0.4 J	0.65 J	1.2 J

Standard Stroke

Bore size (mm)	Standard stroke Note) (mm)
20	25, 50, 75, 100, 125, 150 200, 250, 300
25	
32	
40	

Note 1) Other intermediate strokes can be manufactured upon receipt of order. Manufacture of intermediate strokes at 1 mm intervals is possible. (Spacers are not used.)
Note 2) The maximum limit is 500 stroke, but the products that exceed the standard stroke might not be able to fulfill the specifications.

Accessory Bracket
Refer to pages 144 and 145 for accessory bracket, since it is the same as standard type, double acting, single rod.

Mounting Style and Accessory

Mounting \ Accessory	Standard equipment		Option	
	Mounting nut	Rod end nut	Single knuckle joint	Double knuckle joint (2)
Basic style	● (1 pc.)	● (2 pcs.)	●	●
Axial foot style	● (2)	● (2)	●	●
Flange style	● (1)	● (2)	●	●
Trunnion style	● (1) (1)	● (2)	●	●

Note 1) Trunnion nuts are attached for trunnion style.
Note 2) Pin and retaining ring (cotter pin for bore size ø40) are shipped together with double knuckle joint.

Refer to pages 214 to 218 for cylinders with auto switches.

- Minimum stroke for auto switch mounting
- Proper auto switch mounting position (detection at stroke end) and mounting height
- Operating range
- Switch mounting bracket: Part no.

Mass

(kg)

Bore size (mm)		20	25	32	40
Basic mass	Basic style	0.16	0.25	0.32	0.66
	Axial foot style	0.31	0.41	0.48	0.93
	Flange style	0.22	0.34	0.41	0.78
	Trunnion style	0.20	0.32	0.38	0.76
Additional mass per each 50 mm of stroke		0.06	0.1	0.14	0.20
Option bracket	Single knuckle joint	0.06	0.06	0.06	0.23
	Double knuckle joint (With pin)	0.07	0.07	0.07	0.20

Calculation: (Example) **CM2KWL32-100**

- Basic mass ——— 0.48 (Foot, ø32)
- Additional mass ——— 0.14/50 st
- Cylinder stroke: 100 st

0.48 + 0.14 x 100/50 = 0.76 kg

Mounting Bracket/Part No.

Mounting bracket	Min. order	Bore size (mm)				Description (for min. order)
		20	25	32	40	
Axial foot *	2	CM-L020B	CM-L032B		CM-L040B	2 foot, 1 mounting nut
Flange	1	CM-F020B	CM-F032B		CM-F040B	1 flange
Trunnion (with nuts)	1	CM-T020B	CM-T032B		CM-T040B	1 trunnion, 1 trunnion nut

* Order 2 foot brackets for each cylinder unit.

⚠ Precautions

Be sure to read before handling. Refer to front matters 54 and 55 for Safety Instructions and pages 3 to 11 for Actuator and Auto Switch Precautions.

Operating Precautions

⚠ Warning

1. Do not rotate the cover.
If a cover is rotated when installing a cylinder or screwing a fitting into the port, it is likely to damage the junction part with cover.

2. Do not operate with the cushion needle in a fully closed condition.
Using it in the fully closed state will cause the cushion seal to be damaged. When adjusting the cushion needle, use the “Hexagon wrench key: nominal size 1.5”.

3. Do not open the cushion needle wide excessively.
If the cushion needle were set to be completely wide (more than 3 turns from fully closed), it would be equivalent to the cylinder with no cushion, thus making the impacts extremely high. Do not use it in such a way. Besides, using with fully open could give damage to the piston or cover.

⚠ Caution

1. Avoid using the air cylinder in such a way that rotational torque would be applied to the piston rod.
If rotational torque is applied, the non-rotating guide will become deformed, thus affecting the non-rotating accuracy.
Refer to the table below for the approximate values of the allowable range of rotational torque.

Allowable rotational torque (N·m or less)	ø20	ø25	ø32	ø40
	0.2	0.25	0.25	0.44

To screw a bracket or a nut onto the threaded portion at the tip of the piston rod, make sure to retract the piston rod entirely, and place a wrench over the flat portion of the rod that protrudes.
Tighten it by giving consideration to prevent the tightening torque from being applied to the non-rotating guide.

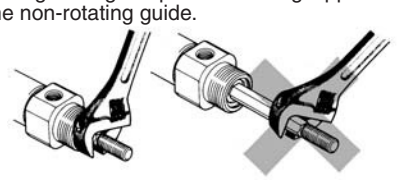

2. When replacing rod seals, please contact SMC.
Air leakage may be happened, depending on the position in which a rod seal is fitted. Thus, please contact SMC when replacing them.

3. Not able to disassemble.
Cover and cylinder tube are connected to each other by caulking method, thus making it impossible to disassemble. Therefore, internal parts of a cylinder other than rod seal are not replaceable.

4. Do not touch the cylinder during operation.
Use caution when handling a cylinder, which is running at a high speed and a high frequency, because the surface of a cylinder tube could get so hot enough as to cause you get burned.

5. Combine the rod end section, so that a rod boot might not be twisted.
If a rod boot is installed with being twisted when installing a cylinder, it will cause a rod boot to fail during operation.

With Air Cushion

CM2KW Mounting style | Bore size | Stroke | **A** | Rod boot

With air cushion

The cushion mechanism is provided for covers in both sides to absorb the impacts when operating at a high speed, thus giving no vibrations to a surrounding area and a long service life brought to cylinder.

Refer to page 147 for the specifications and allowable kinetic energy since this cylinder has the same specification as the double acting double rod model.

Copper/Fluorine-free

20-CM2KW Mounting style | Bore size | Stroke

Copper/fluorine-free

The type which prevents copper based ions from generating by changing the copper based materials into electroless nickel plated treatment or non-copper materials in order to eliminate the effects by copper based ions or fluororesins over the color

Refer to page 147 for the specifications since this cylinder has the same specification as the double acting double rod model.

Construction

Rubber bumper

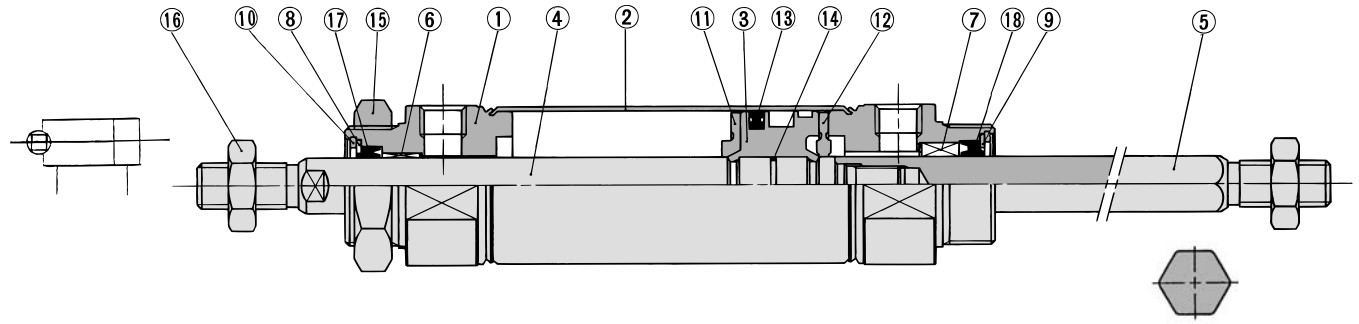

Rod section

With air cushion

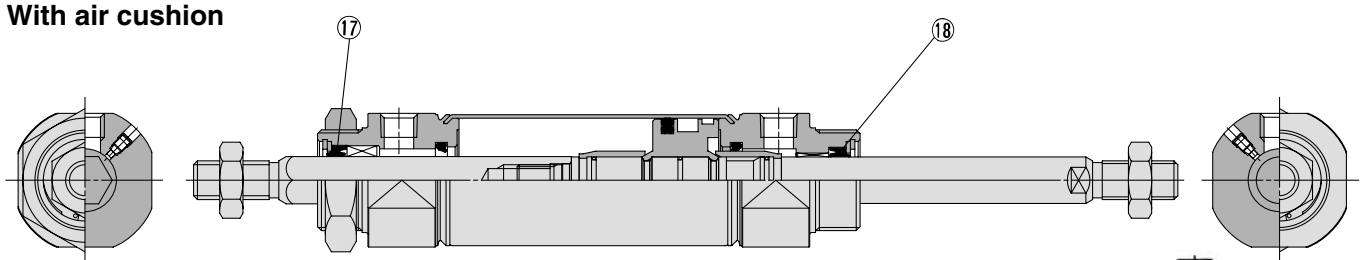

Rod section

Component Parts

No.	Description	Material	Note
1	**Rod cover**	Aluminum alloy	Clear anodized
2	**Cylinder tube**	Stainless steel	
3	**Piston**	Aluminum alloy	Chromated
4	**Piston rod A**	Carbon steel	Hard chrome plated
5	**Piston rod B**	Stainless steel	
6	**Bushing**	Copper oil-impregnated sintered alloy	
7	**Non-rotating guide**	Copper oil-impregnated sintered alloy	
8	**Seal retainer A**	Stainless steel	
9	**Seal retainer B**	Carbon steel	Nickel plated
10	**Retaining ring**	Carbon steel	Phosphate coated
11	**Bumper A**	Urethane	
12	**Bumper B**	Urethane	
13	**Piston seal**	NBR	
14	**Piston gasket**	NBR	
15	**mounting nut**	Carbon steel	Nickel plated
16	**Rod end nut**	Carbon steel	Nickel plated

Replacement Part: Seal

● With Rubber Bumper, With Air Cushion, Built-in One-touch Fittings

No.	Description	Material	Bore size (mm)			
			20	**25**	**32**	**40**
17	**Rod seal A**	NBR	PDU-8Z	PDU-10Z	PDU-12LZ	PDU-14LZ
18	**Rod seal B**	NBR	PDR-8W	PDR-10W	PDR-12W	PDR-14W

∗ Since the seal kit does not include a grease pack, order it separately.
Grease pack part no.: **GR-S-010** (10 g)

Basic Style (B)

CM2KWB Bore size — Stroke

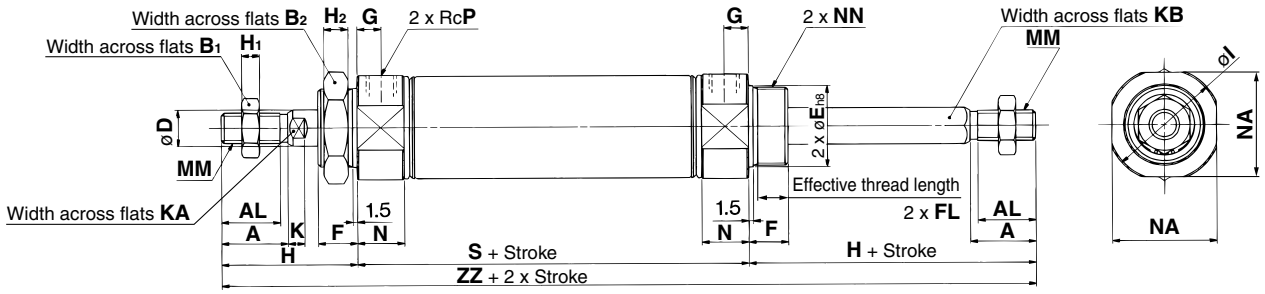

With air cushion

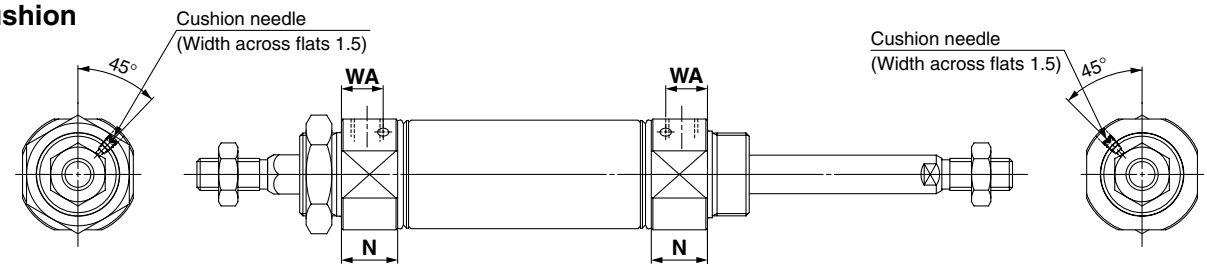

(mm)

Bore size	A	AL	B_1	B_2	D	E	F	FL	G	H	H_1	H_2	I	K	KA	KB	MM	N	NA	NN	P	S	ZZ
20	18	15.5	13	26	8	$20^{0}_{-0.033}$	13	10.5	8	41	5	8	28	5	6	8.2	M8 x 1.25	15	24	M20 x 1.5	1/8	62	144
25	22	19.5	17	32	10	$26^{0}_{-0.033}$	13	10.5	8	45	6	8	33.5	5.5	8	10.2	M10 x 1.25	15	30	M26 x 1.5	1/8	62	152
32	22	19.5	17	32	12	$26^{0}_{-0.033}$	13	10.5	8	45	6	8	37.5	5.5	10	12.2	M10 x 1.25	15	34.5	M26 x 1.5	1/8	64	154
40	24	21	22	41	14	$32^{0}_{-0.033}$	16	13.5	11	50	8	10	46.5	7	12	14.2	M14 x 1.5	21.5	42.5	M32 x 2	1/4	88	188

With Air Cushion

(mm)

Bore size	N	WA
20	17.5	13
25	17.5	13
32	17.5	13
40	21.5	16

Dimensions of Each Mounting Bracket

External dimensions of each mounting bracket other than basic style are the same as standard type, double acting, double rod (except KA dimensions). Refer to pages 153 to 155.

Air Cylinder: Non-rotating Rod Type Single Acting, Spring Return/Extend

Series CM2K

ø20, ø25, ø32, ø40

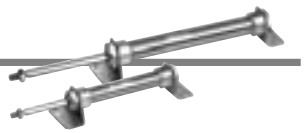

How to Order

Mounting style

B	Basic style
L	Axial foot style
F	Rod side flange style
G	Head side flange style
C	Single clevis style
D	Double clevis style
U	Rod side trunnion style

T	Head side trunnion style
E	Clevis integrated style
BZ	Boss-cut basic style
FZ	Boss-cut rod side flange style
UZ	Boss-cut rod side trunnion style

Cylinder stroke (mm)
(Refer to "Standard Stroke" on page 182.)

Action

S	Single acting, Spring return
T	Single acting, Spring extend

Made to Order
(Refer to page 182 for details.)

CM2K L 32 – 150 S – ☐

With auto switch **CDM2K L 32 – 150 S – M9BW ☐ – ☐**

With auto switch (Built-in magnet)

Bore size

20	20 mm
25	25 mm
32	32 mm
40	40 mm

Number of auto switches

Nil	2 pcs.
S	1 pc.
n	"n" pcs.

Auto switch

Nil	Without auto switch

∗ For the applicable auto switch model, refer to the table below.

Built-in Magnet Cylinder Model

If a built-in magnet cylinder without an auto switch is required, there is no need to enter the symbol for the auto switch.
(Example) CDM2KF32-100T

Applicable Auto Switch/Refer to pages 1263 to 1371 for further information on auto switches.

Type	Special function	Electrical entry	Indicator light	Wiring (Output)	Load voltage DC		Load voltage AC	Auto switch model	Lead wire length (m) 0.5 (Nil)	1 (M)	3 (L)	5 (Z)	None (N)	Pre-wired connector	Applicable load	
Solid state switch	—	Grommet	Yes	3-wire (NPN)	24 V	5 V, 12 V	—	M9N	●	●	●	○	—	○	IC circuit	Relay, PLC
				3-wire (PNP)				M9P	●	●	●	○	—	○		
				2-wire		12 V		M9B	●	●	●	○	—	○	—	
		Connector						H7C	●	—	●	●	●	—		
		Terminal conduit		3-wire (NPN)		5 V, 12 V		G39A	—	—	—	—	●	—	IC circuit	
				2-wire		12 V		K39A	—	—	—	—	●	—	—	
	Diagnostic indication (2-color indication)	Grommet		3-wire (NPN)		5 V, 12 V		M9NW	●	●	●	○	—	○	IC circuit	
				3-wire (PNP)				M9PW	●	●	●	○	—	○		
				2-wire		12 V		M9BW	●	●	●	○	—	○	—	
	Water resistant (2-color indication)							H7BA	—	—	●	○	—	○		
	With diagnostic output (2-color indication)			4-wire (NPN)		5 V, 12 V		H7NF	●	—	●	○	—	○	IC circuit	
Reed switch	—	Grommet	Yes	3-wire (NPN equivalent)	—	5 V	—	A96	●	—	●	—	—	—	IC circuit	—
				2-wire	24 V	12 V	100 V	A93	●	—	●	—	—	—	—	Relay, PLC
			No				100 V or less	A90	●	—	●	—	—	—	IC circuit	
			Yes				100 V, 200 V	B54	●	—	●	●	—	—	—	
			No				200 V or less	B64	●	—	●	—	—	—		
		Connector	Yes				—	C73C	●	—	●	●	●	—		
			No				24 V or less	C80C	●	—	●	●	●	—	IC circuit	
		Terminal conduit	Yes				—	A33A	—	—	—	—	●	—	—	PLC
							100 V, 200 V	A34A	—	—	—	—	●	—		Relay, PLC
		DIN terminal						A44A	—	—	—	—	●	—		
	Diagnostic indication (2-color indication)	Grommet				—	—	B59W	●	—	●	—	—	—		

∗ Lead wire length symbols: 0.5 m ·····Nil (Example) M9NW
1 m ····· M (Example) M9NWM
3 m ····· L (Example) M9NWL
5 m ····· Z (Example) M9NWZ
None ····· N (Example) H7CN

∗ Solid state auto switches marked with "○" are produced upon receipt of order.
∗ D-A9□V□/M9□V□/M9□WV□ and D-M9□A(V)L cannot be mounted.
∗ Do not indicate suffix "N" for no lead wire on D-A3□A/A44A/G39A/K39A models.

∗ Since there are other applicable auto switches than listed above, refer to page 218 for details.
∗ For details about auto switches with pre-wired connector, refer to pages 1328 and 1329.
∗ D-A9□/M9□/M9□W auto switches are shipped together (not assembled). (However, auto switch mounting brackets are assembled when being shipped.)

A cylinder which rod does not rotate because of the hexagonal rod shape.

Non-rotating accuracy
ø20, ø25—±0.7°
ø32, ø40—±0.5°

Can operate without lubrication.

The same installation dimensions as the standard cylinder.

Auto switches can also be mounted.

It can be installed with auto switches to simplify the detection of the stroke position of the cylinder.

JIS Symbol

Single acting, Spring return

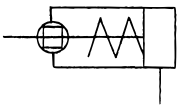

Spring extend

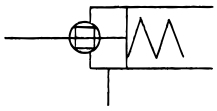

Made to Order Specifications
(For details, refer to pages 1395 to 1498.)

Symbol	Specifications
—XB12	External stainless steel cylinder
—XC3	Special port location
—XC6	Piston rod and rod end nut made of stainless steel
—XC13	Auto switch mounting rail style
—XC20	Head cover axial port
—XC27	Double clevis pin and double knuckle pin made of stainless steel
—XC52	Mounting nut with set screw

⚠ Precautions

Be sure to read before handling. Refer to front matters 54 and 55 for Safety Instructions and pages 3 to 11 for Actuator and Auto Switch Precautions.

Refer to pages 214 to 218 for cylinders with auto switches.

- Minimum stroke for auto switch mounting
- Proper auto switch mounting position (detection at stroke end) and mounting height
- Operating range
- Switch mounting bracket: Part no.

Specifications

Bore size (mm)		20	25	32	40
Rod non-rotating accuracy		±0.7		±0.5	
Action		Spring acting, Spring return/Spring extend			
Fluid		Air			
Cushion		Rubber bumper			
Proof pressure		1.5 MPa			
Maximum operating pressure		1.0 MPa			
Minimum operating pressure	Spring return	0.18 MPa			
	Spring extend	0.23 MPa			
Ambient and fluid temperature		Without auto switch: –10 to 70°C (No freezing) With auto switch: –10 to 60°C (No freezing)			
Lubrication		Not required (Non-lube)			
Stroke length tolerance		$^{+1.4}_{0}$ mm			
Piston speed		50 to 500 mm/s			
Allowable kinetic energy		0.27 J	0.4 J	0.65 J	1.2 J

Standard Stroke

Bore size (mm)	Standard stroke (mm) Note)
20	25, 50, 75, 100, 125, 150
25	25, 50, 75, 100, 125, 150
32	25, 50, 75, 100, 125, 150, 200
40	25, 50, 75, 100, 125, 150, 200, 250

Note 1) Other intermediate strokes can be manufactured upon receipt of order.
Manufacture of intermediate strokes at 1 mm intervals is possible.
(Spacers are not used.)
Note 2) Please contact SMC for longer strokes.

Mounting Bracket Part No.

Mounting bracket	Min. order	Bore size (mm) 20	25	32	40	Description (for min. order)
Axial foot *	2	CM-L020B	CM-L032B		CM-L040B	2 foot, 1 mounting nut
Flange	1	CM-F020B	CM-F032B		CM-F040B	1 flange
Single clevis**	1	CM-C020B	CM-C032B		CM-C040B	1 single clevis, 3 liners
Double clevis*** (with pins)	1	CM-D020B	CM-D032B		CM-D040B	1 double clevis, 3 liners, 1 clevis pin, 2 retaining rings
Trunnion (with nuts)	1	CM-T020B	CM-T032B		CM-T040B	1 trunnion, 1 trunnion nut

* Order 2 foot brackets for each cylinder unit.
** 3 Liners are attached with a clevis bracket for adjusting the mounting angle.
*** Clevis pins and retaining rings (cotter pins for ø40) are attached.

Theoretical Output

Refer to “Theoretical Output 1” on page 1573.

Spring Reaction Force

Refer to “Spring Reaction Force 3” on page 1570.

Boss-cut style

Boss for the head side cover bracket is eliminated and the total length of cylinder is shortened.



Comparison of the Full Length Dimension (Versus standard type) (mm)

ø20	ø25	ø32	ø40
▲13	▲13	▲13	▲16

Mounting style

- ■ Boss-cut basic style (BZ)
- ■ Boss-cut flange style (FZ)
- ■ Boss-cut trunnion style (UZ)

Mounting Style and Accessory

Mounting \ Accessory	Standard equipment			Option		
	Mounting nut	Rod end nut	Clevis pin	Single knuckle joint	Double knuckle joint (3)	Clevis bracket (4)
Basic style	● (1 pc.)	●	—	●	●	—
Axial foot style	● (2)	●	—	●	●	—
Rod side flange style	● (1)	●	—	●	●	—
Head side flange style	● (1)	●	—	●	●	—
Clevis integrated style	— (1)	●	—	●	●	●
Single clevis style	— (1)	●	—	●	●	—
Double clevis style (3)	— (1)	●	● (5)	●	●	—
Rod side trunnion style	● (1) (2)	●	—	●	●	—
Head side trunnion style	● (1) (2)	●	—	●	●	—
Boss-cut basic style	● (1)	●	—	●	●	—
Boss-cut flange style	● (1)	●	—	●	●	—
Boss-cut trunnion style	● (1)	●	—	●	●	—

Note 1) Mounting nuts are not attached for clevis integrated style, single clevis, and double clevis styles.
Note 2) Trunnion nuts are attached for rod side trunnion and head side trunnion styles.
Note 3) Pin and retaining ring (cotter pin for bore size ø40) are shipped together with double clevis and double knuckle joint.
Note 4) Pin and retaining ring are shipped together with clevis pivot bracket.
Note 5) Clevis pins come with retaining rings (cotter pins for ø40).

Mass

Spring Return/( ): Denotes Spring Extend.

(kg)

Bore size (mm)		20	25	32	40
Basic mass	25 stroke	0.20 (0.19)	0.31 (0.30)	0.43 (0.41)	0.78 (0.75)
	50 stroke	0.23 (0.21)	0.34 (0.33)	0.48 (0.45)	0.86 (0.83)
	75 stroke	0.29 (0.25)	0.43 (0.41)	0.61 (0.56)	1.08 (0.99)
	100 stroke	0.31 (0.27)	0.47 (0.44)	0.66 (0.60)	1.14 (1.06)
	125 stroke	0.37 (0.32)	0.56 (0.52)	0.81 (0.72)	1.34 (1.23)
	150 stroke	0.39 (0.34)	0.59 (0.55)	0.85 (0.76)	1.39 (1.31)
	200 stroke	— (—)	— (—)	1.04 (0.92)	1.71 (1.54)
	250 stroke	— (—)	— (—)	— (—)	2.00 (1.78)
Mounting bracket mass	Foot style	0.15 (0.15)	0.16 (0.16)	0.16 (0.16)	0.27 (0.27)
	Flange style	0.06 (0.06)	0.09 (0.09)	0.09 (0.09)	0.12 (0.12)
	Single clevis style	0.04 (0.04)	0.04 (0.04)	0.04 (0.04)	0.09 (0.09)
	Double clevis style	0.05 (0.05)	0.06 (0.06)	0.06 (0.06)	0.13 (0.13)
	Trunnion style	0.04 (0.04)	0.07 (0.07)	0.07 (0.07)	0.10 (0.10)
	Integral clevis style	–0.02 (–0.02)	–0.02 (–0.02)	–0.01 (–0.01)	–0.04 (–0.04)
	Boss-cut basic style	–0.01 (–0.01)	–0.02 (–0.02)	–0.02 (–0.02)	–0.03 (–.03)
	Boss-cut flange style	0.05 (0.05)	0.07 (0.07)	0.07 (0.07)	0.09 (0.09)
	Boss-cut trunnion style	0.03 (0.03)	0.05 (0.05)	0.05 (0.05)	0.07 (0.07)
	Clevis bracket (With pin)	0.07 (0.07)	0.07 (0.07)	0.14 (0.14)	0.14 (0.14)
Option bracket	Single knuckle joint	0.06 (0.06)	0.06 (0.06)	0.06 (0.06)	0.23 (0.23)
	Double knuckle joint (With pin)	0.07 (0.07)	0.07 (0.07)	0.07 (0.07)	0.20 (0.20)

Calculation:
(Example) **CM2KL32-100S** (Bore size ø32, Foot style, 100 stroke)
0.66 (Basic mass) + 0.16 (Mounting bracket mass) = 0.82 kg

Copper/Fluorine-free

20-CM2K | Mounting style | Bore size | – | Stroke | Action

Copper/fluorine-free

The type which prevents copper based ions from generating by changing the copper based materials into electroless nickel plated treatment or non-copper materials in order to eliminate the effects by copper based ions or fluororesins over the color cathode ray tube.

Specifications

Action	Single acting, Spring return	Single acting, Spring extend
Bore size (mm)	ø20, ø25, ø32, ø40	
Max. operating pressure	1.0 MPa	
Min. operating pressure	0.18 MPa	0.23 MPa
Cushion	Rubber bumper	
Piston speed	50 to 500 mm/s	
Mounting	Basic style, Axial foot style, Rod side flange style, Head side flange style, Single clevis style, Double clevis style, Rod side trunnion style, Head side trunnion style, Clevis integrated style, Boss-cut style	

∗ Auto switch can be mounted.

Construction

Spring return

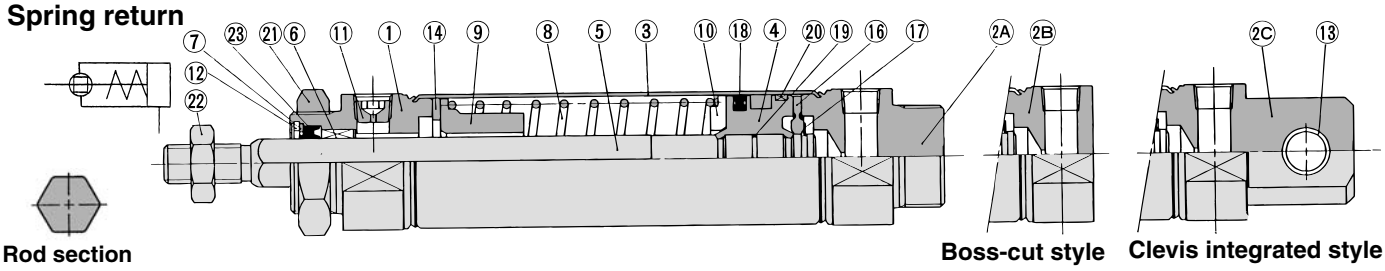

Rod section

Boss-cut style

Clevis integrated style

Spring extend

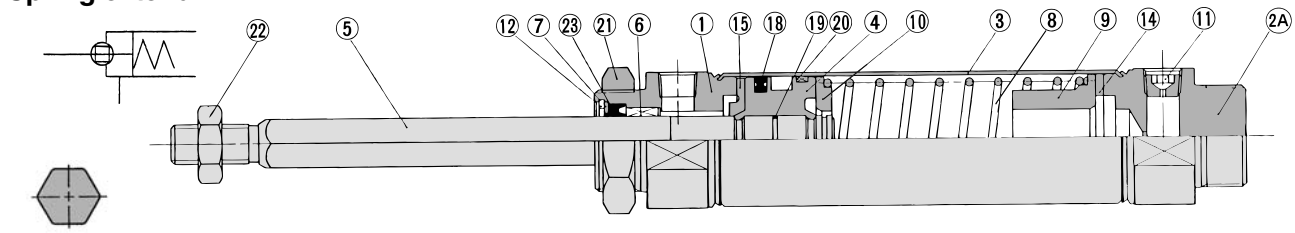

Rod section

Component Parts

No.	Description	Material	Note
1	**Rod cover**	Aluminum alloy	Clear anodized
2A	**Head cover A**	Aluminum alloy	Clear anodized *
2B	**Head cover B**	Aluminum alloy	Clear anodized **
2C	**Head cover C**	Aluminum alloy	Clear anodized ***
3	**Cylinder tube**	Stainless steel	
4	**Piston**	Aluminum alloy	Chromated
5	**Piston rod**	Stainless steel	
6	**Non-rotating guide**	Copper oil-impregnated sintered alloy	
7	**Seal retainer**	Carbon steel	Nickel plated
8	**Return spring**	Steel wire	Zinc chromated
9	**Spring guide**	Aluminum alloy	Chromated
10	**Spring seat**	Aluminum alloy	Chromated
11	**Plug with fixed orifice**	Alloy steel	Black zinc chromated

∗ Basic style, ∗∗ Boss-cut style, ∗∗∗ Clevis integrated style

No.	Description	Material	Note
12	**Retaining ring**	Carbon steel	Phosphate coated
13	**Clevis bushing**	Copper oil-impregnated sintered alloy	
14	**Bumper**	Urethane	
15	**Bumper A**	Urethane	
16	**Bumper B**	Urethane	
17	**Retaining ring**	Stainless steel	
18	**Piston seal**	NBR	
19	**Piston gasket**	NBR	
20	**Wear ring**	Resin	
21	**Mounting nut**	Carbon steel	Nickel plated
22	**Rod end nut**	Carbon steel	Nickel plated

Replacement Parts: Seal

No.	Description	Material	Part no.			
			20	**25**	**32**	**40**
23	**Rod seal**	NBR	PDR-8W	PDR-10W	PDR-12W	PDR-14W

*Since the seal kit does not include a grease pack, order it separately.

Grease pack part no.:GR-S-010(10g)

Basic Style (B)

CM2KB Bore size — Stroke S/T

Spring return

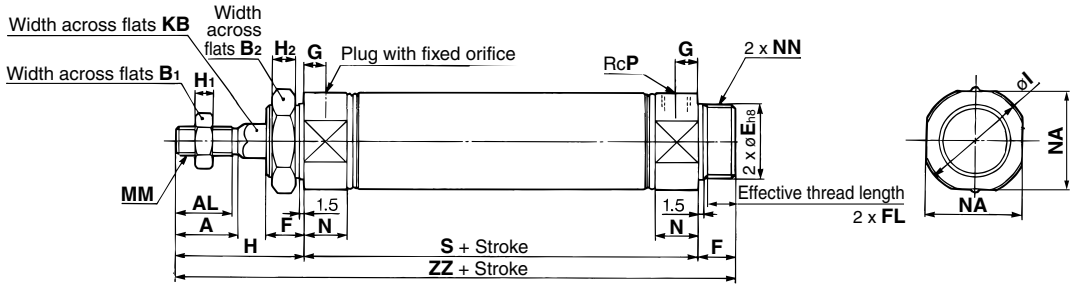

Spring extend

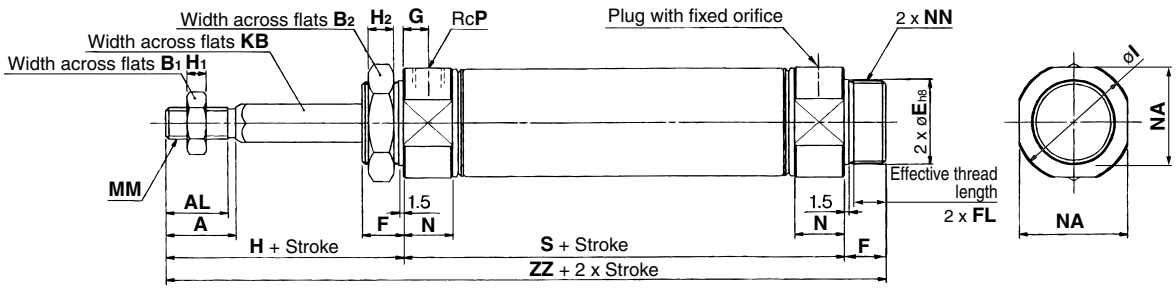

Boss-cut style

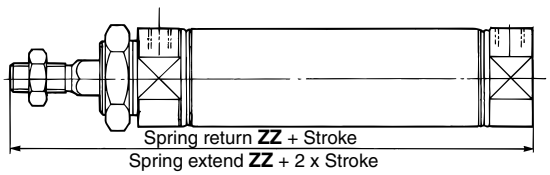

(mm)

Bore size	A	AL	B_1	B_2	E	F	FL	G	H	H_1	H_2	I	KB	MM	N	NA	NN	P
20	18	15.5	13	26	$20^{0}_{-0.033}$	13	10.5	8	41	5	8	28	8.2	M8 x 1.25	15	24	M20 x 1.5	1/8
25	22	19.5	17	32	$26^{0}_{-0.033}$	13	10.5	8	45	6	8	33.5	10.2	M10 x 1.25	15	30	M26 x 1.5	1/8
32	22	19.5	17	32	$26^{0}_{-0.033}$	13	10.5	8	45	6	8	37.5	12.2	M10 x 1.25	15	34.5	M26 x 1.5	1/8
40	24	21	22	41	$32^{0}_{-0.039}$	16	13.5	11	50	8	10	46.5	14.2	M14 x 1.5	21.5	42.5	M32 x 2	1/4

Dimensions by Stroke

(mm)

Bore size \ Stroke / Symbol	1 to 50		51 to 100		101 to 150		151 to 200		201 to 250	
	S	**ZZ**	**S**	**ZZ**	**S**	**ZZ**	**S**	**ZZ**	**S**	**ZZ**
20	87	141	112	166	137	191	—	—	—	—
25	87	145	112	170	137	195	—	—	—	—
32	89	147	114	172	139	197	164	222	—	—
40	113	179	138	204	163	229	188	254	213	279

Boss-cut Style

(mm)

Bore size \ Stroke / Symbol	1 to 50	51 to 100	101 to 150	151 to 200	201 to 250
	ZZ	**ZZ**	**ZZ**	**ZZ**	**ZZ**
20	128	153	178	—	—
25	132	157	182	—	—
32	134	159	184	209	—
40	163	188	213	238	263

External dimensions of each mounting bracket other than basic style are the same as standard type, single acting, spring return/spring extend (except piston rod configuration). Refer to pages 163 to 170.
Specifications with auto switch are the same as standard type (CDM2- □S/T).

Air Cylinder: Direct Mount Type Double Acting, Single Rod

Series CM2R

ø20, ø25, ø32, ø40



How to Order

Cylinder stroke (mm)
(Refer to "Standard Stroke" on page 187.)

Cushion

Nil	Rubber bumper
A	Air cushion

∗ Air-hydro cylinder: Rubber bumper only

Type

Nil	Pneumatic
H	Air-hydro

Made to Order
(Refer to page 187 for details.)

CM2 □ R A 20 – 100 A – □

With auto switch **CDM2 □ R A 20 – 100 A – M9BW □ – □**

With auto switch (Built-in magnet)

Mounting style

A	Bottom mounting style
B	Front mounting style

Number of auto switches

Nil	2 pcs.
S	1 pc.
n	"n" pcs.

Bore size

20	20 mm
25	25 mm
32	32 mm
40	40 mm

Auto switch

Nil	Without auto switch

∗ For the applicable auto switch model, refer to the table below.

Built-in Magnet Cylinder Model

If a built-in magnet cylinder without an auto switch is required, there is no need to enter the symbol for the auto switch.
(Example) CDM2RB32-100

Applicable Auto Switch/Refer to pages 1263 to 1371 for further information on auto switches.

Type	Special function	Electrical entry	Indicator light	Wiring (Output)	Load voltage DC		Load voltage AC	Auto switch model	Lead wire length (m) 0.5 (Nil)	1 (M)	3 (L)	5 (Z)	None (N)	Pre-wired connector	Applicable load	
Solid state switch	—	Grommet	Yes	3-wire (NPN)	24V	5V, 12V	—	M9N	●	●	●	○	—	○	IC circuit	Relay, PLC
				3-wire (PNP)				M9P	●	●	●	○	—	○		
				2-wire		12V		M9B	●	●	●	○	—	○	—	
		Connector						H7C	●	—	●	●	●	—		
		Terminal conduit		3-wire (NPN)		5V, 12V		G39A **	—	—	—	—	●	—	IC circuit	
				2-wire		12V		K39A **	—	—	—	—	●	—	—	
	Diagnostic indication (2-color indication)	Grommet		3-wire (NPN)		5V,12V		M9NW	●	●	●	○	—	○	IC circuit	
				3-wire (PNP)				M9PW	●	●	●	○	—	○		
				2-wire		12V		M9BW	●	●	●	○	—	○	—	
	Water resistant (2-color indication)							H7BA	—	—	●	○	—	○		
	With diagnostic output (2-color indication)			4-wire (NPN)		5V, 12V		H7NF	●	—	●	○	—	○	IC circuit	
Reed switch	—	Grommet	Yes	3-wire (NPN equivalent)	—	5V	—	A96	●	—	●	—	—	—	IC circuit	—
				2-wire	24V	12V	100V	A93	●	—	●	—	—	—	—	Relay, PLC
			No				100V or less	A90	●	—	●	—	—	—	IC circuit	
			Yes				100V, 200V	B54 **	●	—	●	●	—	—	—	
			No				200V or less	B64 **	●	—	●	—	—	—		
		Connector	Yes				—	C73C	●	—	●	●	●	—		
			No				24V or less	C80C	●	—	●	●	●	—	IC circuit	
		Terminal conduit	Yes				—	A33A **	—	—	—	—	●	—	—	PLC
							100V, 200V	A34A **	—	—	—	—	●	—		Relay, PLC
		DIN terminal						A44A **	—	—	—	—	●	—		
	Diagnostic indication (2-color indication)	Grommet				—	—	B59W	●	—	●	—	—	—		

∗ Lead wire length symbols: 0.5 m ·····Nil (Example) M9NW
1 m ····· M (Example) M9NWM
3 m ····· L (Example) M9NWL
5 m ····· Z (Example) M9NWZ
None ····· N (Example) H7CN

∗ Solid state auto switches marked with "○" are produced upon receipt of order.
∗ D-A9□V/M9□V/M9□WV and D-M9□A(V)L cannot be mounted.
∗ Do not indicate suffix "N" for no lead wire on D-A3□A/A44A/G39A/K39A models.
∗∗ D-A3□A/A44A/G39A/K39A/B54/B64 cannot be mounted on bore sizes ø20 and ø25 cylinder with air cushion.

∗ Since there are other applicable auto switches than listed above, refer to page 218 for details.
∗ For details about auto switches with pre-wired connector, refer to pages 1328 and 1329.
∗ D-A9□/M9□/M9□W auto switches are shipped together (not assembled). (However, auto switch mounting brackets are assembled when being shipped.)

Series CM2R direct mount cylinder can be installed directly through the use of a square rod cover.

Space saving has been realized.
Because it is a directly mounted style without using brackets, its overall length is shorter, and its installation pitch can be made smaller. Thus, the space that is required for installation has been dramatically reduced.

Improved installation accuracy and strength
A centering boss has been provided to improve the installation accuracy. Also, because it is the directly mounted style, the strength has been increased.

Two styles of installation
Two styles of installations are available and can be selected according to the purpose: the front mounting style or the bottom mounting style.

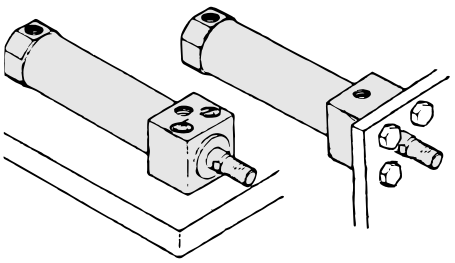

Bottom mounting style **Front mounting style**

JIS Symbol
Double acting

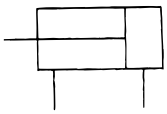

Specifications

Bore size (mm)		20	25	32	40
Action		Double acting, Single rod			
Fluid		Air			
Proof pressure		1.5 MPa			
Maximum operating pressure		1.0 MPa			
Minimum operating pressure		0.05 MPa			
Ambient and fluid temperature		Without auto switch: –10 to 70°C (No freezing) With auto switch: –10 to 60°C (No freezing)			
Lubrication		Not required (Non-lube)			
Stroke length tolerance		$^{+1.4}_{0}$ mm			
Piston speed		Rubber bumper: 50 to 750 mm/s, Air cusion: 50 to 1000 mm/s			
Cushion		Rubber bumper, Air cushion			
Allowable kinetic energy	**Rubber bumper**	0.27 J	0.4 J	0.65 J	1.2 J
	Air cushion (Effective cushion length (mm))	0.54 J (11.0)	0.78 J (11.0)	1.27 J (11.0)	2.35 J (11.8)

Standard Stroke

Bore size (mm)	Standard stroke (mm) (1)	Maximum manufacturable stroke (mm)(2)
20	25, 50, 75, 100, 125, 150	1000
25	25, 50, 75, 100, 125, 150, 200	1500
32	25, 50, 75, 100, 125, 150, 200	2000
40	25, 50, 75, 100, 125, 150, 200, 250, 300	2000

Note 1) Other intermediate strokes can be manufactured upon receipt of order.
Manufacture of intermediate strokes at 1 mm intervals is possible.
(Spacers are not used.)
Note 2) Refer to next page for Precations.

Tightening Torque: Tighten the cylinder mounting bolts for the bottom mounting Style (Series CM2RA) with the following tightening torque.

Bore size (mm)	Hexagon socket head cap screw size	Tightening torque(N·m)
20	M5 x 0.8	2.4 to 3.6
25	M6	4.2 to 6.2
32	M8	10.0 to 15.0
40	M10	19.6 to 29.4

Refer to pages 214 to 218 for cylinders with auto switches.

- Minimum stroke for auto switch mounting
- Proper auto switch mounting position (detection at stroke end) and mounting height
- Operating range
- Switch mounting bracket: Part no.

Made to Order Specifications
(For details, refer to pages 1373 to 1498.)

Symbol	Specifications
—XA□	Change of rod end shape
—XB6	Heat resistant cylinder (150°C)
—XB7	Cold resistant cylinder
—XB9	Low speed cylinder (10 to 50 mm/s)
—XB13	Low speed cylinder (5 to 50 mm/s)
—XC3	Special port location
—XC5	Heat resistant cylinder (110°C)
—XC6	Piston rod and rod end nut made of stainless steel
—XC8	Adjustable stroke cylinder/Adjustable extension type
—XC9	Adjustable stroke cylinder/Adjustable retraction type
—XC11	Dual stroke cylinder/Single rod type
—XC12	Tandem cylinder
—XC13	Auto switch mounting rail style
—XC20	Head cover axial port
—XC22	Fluororubber seals
—XC25	No fixed orifice of connecting port
—XC29	Double knuckle joint with spring pin

Accessory

Accessory / Mounting	Standard equipment	Option	
	Rod end nut	Single knuckle joint	Double knuckle joint (With pin) *
Bottom mounting style	●	●	●
Front mounting style	●	●	●

* Knuckle pin and retaining ring (cotter pin for ø40) are shipped together.

Mass

(kg)

Bore size (mm)		20	25	32	40
Basic mass	Bottom mounting style	0.14	0.23	0.32	0.62
	Front mounting style	0.14	0.22	0.32	0.61
Additional mass per each 50 mm of stroke		0.04	0.06	0.08	0.13

Calculation: (Example)**CM2RA32-100**
(ø32, 100 stroke, Bottom mounting)
- Basic mass·····0.32kg
- Additional mass·····0.08kg
- Cylinder stroke·····100mm

0.32 + 0.08 x 100/50 = 0.48kg

⚠ Precautions

Be sure to read before handling. Refer to front matters 54 and 55 for Safety Instructions and pages 3 to 11 for Actuator and Auto Switch Precautions.

Operating Precautions

⚠Warning

1. Do not rotate the cover.
If a cover is rotated when installing a cylinder or screwing a fitting into the port, it is likely to damage the junction part with cover.

2. Do not operate with the cushion needle in a fully closed condition.
Using it in the fully closed state will cause the cushion seal to be damaged. When adjusting the cushion needle, use the "Hexagon wrench key: nominal size 1.5".

3. Do not open the cushion needle wide excessively.
If the cushion needle were set to be completely wide (more than 3 turns from fully closed), it would be equivalent to the cylinder with no cushion, thus making the impacts extremely high. Do not use it in such a way. Besides, using with fully open could give damage to the piston or cover.

4. In the case of exceeding the standard stroke length, implement an intermediate support.
When using cylinder with longer stroke, implement an intermediate support for preventing the joint of rod cover and cylinder tube from being broken by vibration or external load.

⚠Caution

1. Not able to disassemble.
Cover and cylinder tube are connected to each other by caulking method, thus making it impossible to disassemble. Therefore, internal parts of a cylinder other than rod seal are not replaceable.

2. Use caution to the popping of a retaining ring.
When replacing rod seals and removing and mounting a retaining ring, use a proper tool (retaining ring plier: tool for installing a type C retaining ring). Even if a proper tool is used, it is likely to inflict damage to a human body or peripheral equipment, as a retaining ring may be flown out of the tip of a plier. Be much careful with the popping of a retaining ring. Besides, be certain that a retaining ring is placed firmly into the groove of rod cover before supplying air at the time of installment.

3. Do not touch the cylinder during operation.
Use caution when handling a cylinder, which is running at a high speed and a high frequency, because the surface of a cylinder tube could get so hot enough as to cause you get burned.

4. Do not use an air cylinder as an air-hydro cylinder.
If it uses turbine oil in place of fluids for cylinder, it may result in oil leakage.

Clean Series

10-CM2R | **Mounting style** | **Bore size** | **Stroke**

Clean Series (with relief port)

The type which is applicable for using inside the clean room graded Class 100 by making an actuator's rod section a double seal construction and discharging by relief port directly to the outside of clean room.



Specifications

Action	Double acting, Single rod
Bore size (mm)	ø20, ø25, ø32, ø40
Max. operating pressure	1.0 MPa
Min. operating pressure	0.05 MPa
Cushion	Rubber bumper (Standard equipment)
Relief port size	M5 x 0.8
Piston speed	30 to 400 mm/s
Mounting	Bottom mounting style, Front mounting style

* Auto switch can be mounted.

Construction

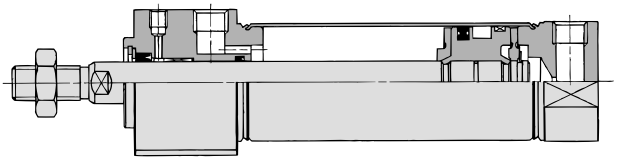

Front mounting style

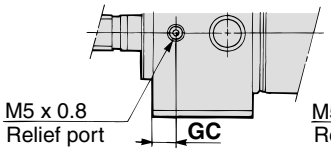

Bottom mounting style

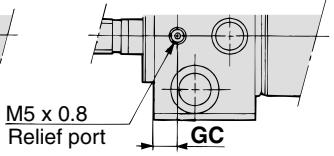

(mm)

Bore size (mm)	GC
20	6
25	6
32	7
40	9

For details, refer to the separate catalog, "Pneumatic Clean Series".

Air-hydro

CM2HR | **Mounting style** | **Bore size** — **Stroke**

• **Air-hydro**

A low hydraulic pressure cylinder used at a pressures of 1.0 MPa or below.
Through the concurrent use of a CC series air-hydro unit, it is possible to operate at a constant or low speeds or to effect an intermediate stop, just like a hydraulic unit, while using pneumatic equipment such as a valve.



Specifications

Type	Air-hydro
Fluid	Turbine oil
Action	Double acting, Single rod
Bore size (mm)	ø20, ø25, ø32, ø40
Proof pressure	1.5 MPa
Max. operating pressure	1.0 MPa
Min. operating pressure	0.18 MPa
Piston speed	15 to 300 mm/s
Cushion	Rubber bumper
Ambient and fluid temperature	+5 to +60°C
Thread tolerance **Stroke length tolerance**	$^{+1.4}_{0}$ mm
Mounting	Bottom mounting style, Front mounting style

∗ Auto switches can be mounted. Dimensions are the same as the standard type of Series CM2R.

• For construction, refer to page 190.
• Since the dimensions of mounting style is the same as pages 191and 192, refer to those pages.

Copper/Fluorine-free

20-CM2R | **Mounting style** | **Bore size** — **Stroke**

• **Copper/fluorine-free**

The type which prevents copper based ions from generating by changing the copper based materials into electroless nickel plated treatment or non-copper materials in order to eliminate the effects by copper based ions or fluororesins over the color cathode ray tube.

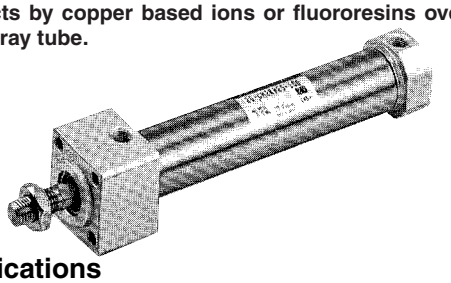

Specifications

Action	Double acting, Single rod
Bore size (mm)	ø20, ø25, ø32, ø40
Max. operating pressure	1.0 MPa
Min. operating pressure	0.05 MPa
Cushion	Rubber bumper
Piston speed	50 to 750 mm/s
Mounting	Bottom mounting style Front mounting style

∗ Auto switch can be mounted.

Construction

Rubber bumper

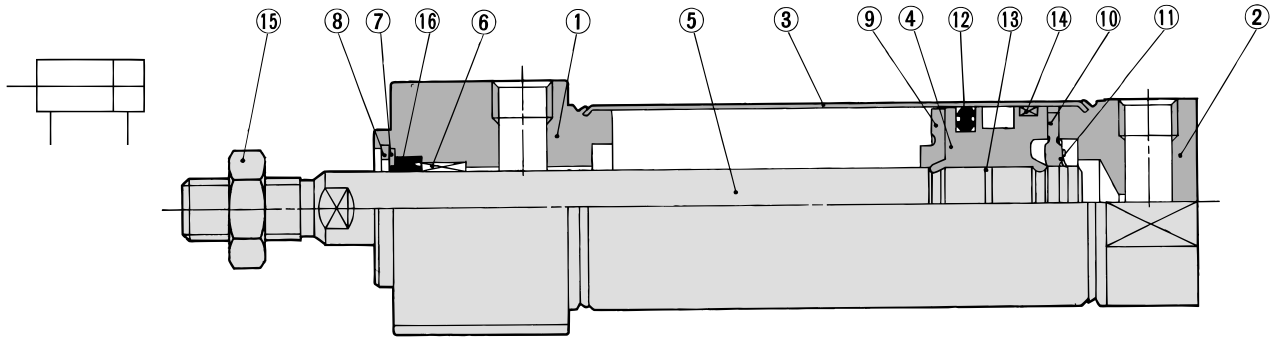

Air-hydro

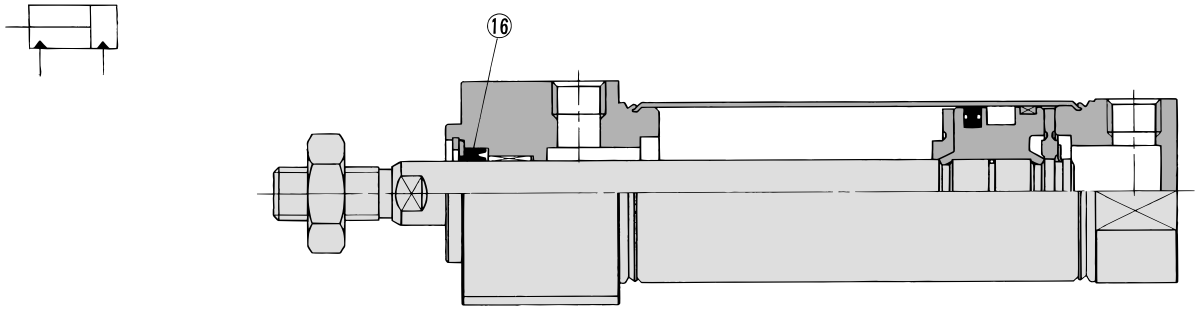

With air cushion

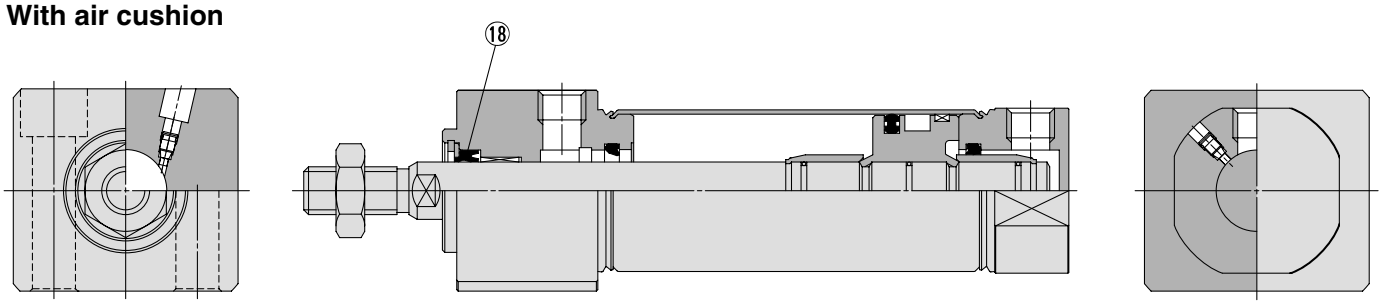

Component Parts

No.	Description	Material	Note
1	**Rod cover**	Aluminum alloy	Clear anodized
2	**Head cover**	Aluminum alloy	Clear anodized
3	**Cylinder tube**	Stainless steel	
4	**Piston**	Aluminum alloy	Chromated
5	**Piston rod**	Carbon steel	Hard chrome plated
6	**Bushing**	Copper oil-impregnated sintered alloy	
7	**Seal retainer**	Stainless steel	
8	**Retaining ring**	Carbon steel	Phosphate coated
9	**Bumper A**	Urethane	
10	**Bumper B**	Urethane	
11	**Retaining ring**	Stainless steel	
12	**Piston seal**	NBR	
13	**Piston gasket**	NBR	
14	**Wear ring**	Resin	
15	**Rod end nut**	Carbon steel	Nickel plated

Replacement Part: Seal

● **With Rubber Bumper, With Air Cushion**

No.	Description	Material	Part no.			
			20	**25**	**32**	**40**
16	**Rod seal**	NBR	PDU-8Z	PDU-10Z	PDU-12LZ	PDU-14LZ

● **Air-hydro**

No.	Description	Material	Part no.			
			20	**25**	**32**	**40**
16	**Rod seal**	NBR	HDU-8	HDU-10	HDU-12L	HDU-14

∗ Since the seal kit does not include a grease pack, order it separately.
Grease pack part no.: GR-S-010 (10 g)

For proper auto switch mounting position (at stroke end), refer to pages 215 to 217, since the operating range is the same as standard type, single rod.

Bottom Mounting Style

CM2RA Bore size — Stroke

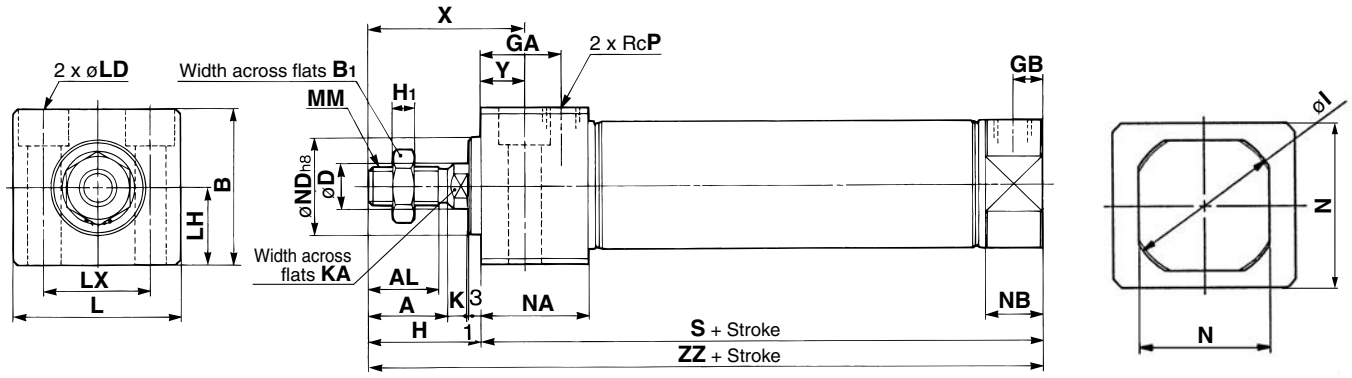

With air cushion

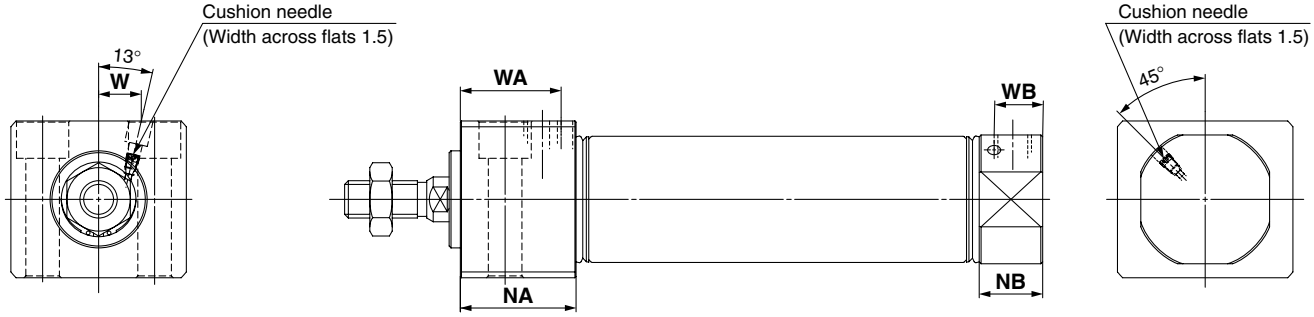

(mm)

Bore size	Stroke range
20	1 to 150
25	1 to 200
32	1 to 200
40	1 to 300

(mm)

Bore size	A	AL	B	B_1	D	GA	GB	H	H_1	I	K	KA	L	LD	LH	LX	MM	N	NA	NB	ND	P	S	X	Y	ZZ
20	18	15.5	30.3	13	8	22	8	27	5	28	5	6	33.5	ø5.5, ø9.5 counterbore depth 6.5	15	21	M8 x 1.25	24	29	15	$20^{0}_{-0.033}$	1/8	76	39	12	103
25	22	19.5	36.3	17	10	22	8	31	6	33.5	5.5	8	39	ø6.6, ø11 counterbore depth 7.5	18	25	M10 x 1.25	30	29	15	$26^{0}_{-0.033}$	1/8	76	43	12	107
32	22	19.5	42.3	17	12	22	8	31	6	37.5	5.5	10	47	ø9, ø14 counterbore depth 10	21	30	M10 x 1.25	34.5	29	15	$26^{0}_{-0.033}$	1/8	78	43	12	109
40	24	21	52.3	22	14	27	11	34	8	46.5	7	12	58.5	ø11, ø17.5 counterbore depth 12.5	26	38	M14 x 1.5	42.5	37.5	21.5	$32^{0}_{-0.039}$	1/4	104	49	15	138

With Air Cushion

(mm)

Bore size	NA	NB	WA	WB	W
20	31.5	17.5	27	13	8.5
25	31.5	17.5	27	13	10.5
32	31.5	17.5	27	13	11.5
40	37.5	21.5	32	16	15

Front Mounting Style

CM2RB Bore size – Stroke

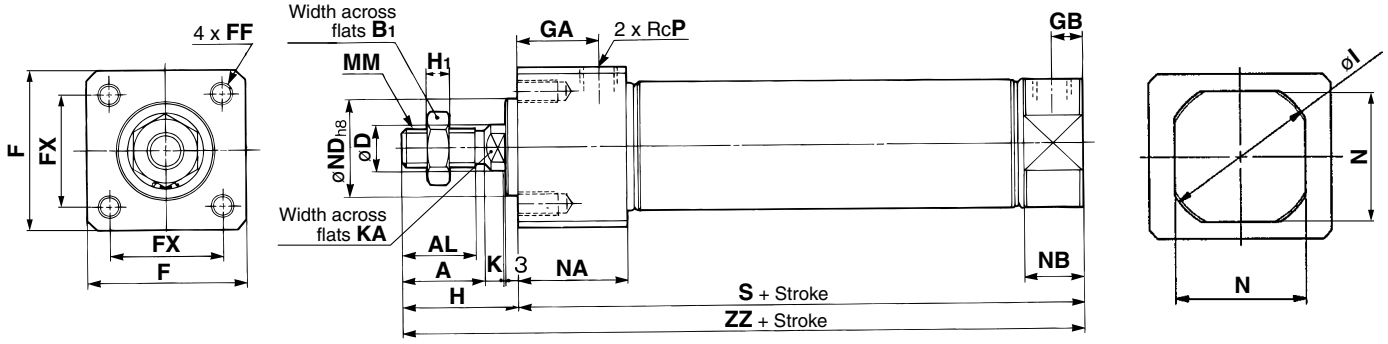

With air cushion

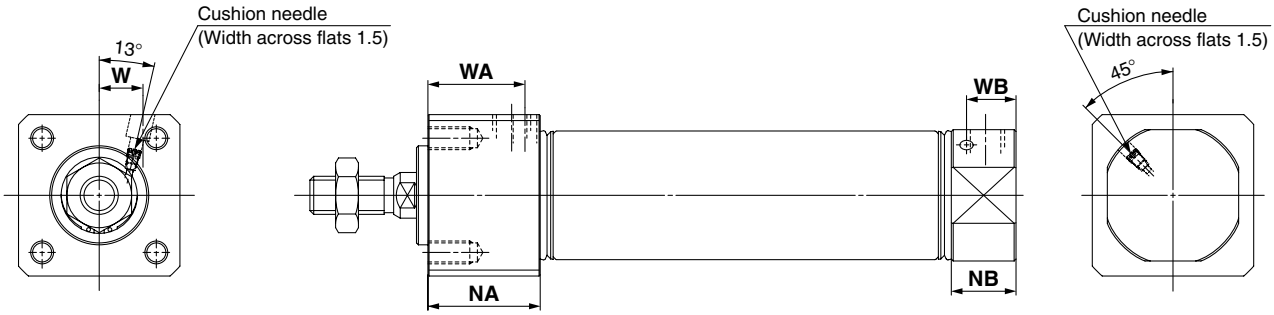

(mm)

Bore size	Stroke range
20	1 to 150
25	1 to 200
32	1 to 200
40	1 to 300

(mm)

Bore size	A	AL	B_1	D	F	FF	FX	GA	GB	H	H_1	I	K	KA	MM	N	NA	NB	ND	P	S	ZZ
20	18	15.5	13	8	30.4	M5 x 0.8 depth 9	22	22	8	27	5	28	5	6	M8 x 1.25	24	29	15	$20^{0}_{-0.033}$	1/8	76	103
25	22	19.5	17	10	36.4	M6 x 1 depth 11	26	22	8	31	6	33.5	5.5	8	M10 x 1.25	30	29	15	$26^{0}_{-0.033}$	1/8	76	107
32	22	19.5	17	12	42.4	M6 x 1 depth 11	30	22	8	31	6	37.5	5.5	10	M10 x 1.25	34.5	29	15	$26^{0}_{-0.033}$	1/8	78	109
40	24	21	22	14	52.4	M8 x 1.25 depth 14	36	27	11	34	8	46.5	7	12	M14 x 1.5	42.5	37.5	21.5	$32^{0}_{-0.039}$	1/4	104	138

With Air Cushion

(mm)

Bore size	NA	NB	WA	WB	W
20	31.5	17.5	27	13	8.5
25	31.5	17.5	27	13	10.5
32	31.5	17.5	27	13	11.5
40	37.5	21.5	32	16	15

Air Cylinder: Direct Mount, Non-rotating Rod Type
Double Acting, Single Rod
Series CM2RK
ø20, ø25, ø32, ø40



How to Order

Cylinder stroke (mm)
(Refer to "Standard Stroke" on page 194.)

Made to Order
(Refer to page 194 for details.)

CM2RK **A** **20** – **100** – ☐

With auto switch **CDM2RK** **A** **20** – **100** – **M9BW** ☐ – ☐

With auto switch (Built-in magnet)

Mounting style

A	Bottom mounting style
B	Front mounting style

Bore size

20	20 mm
25	25 mm
32	32 mm
40	40 mm

Auto switch

Nil	Without auto switch

∗ For the applicable auto switch model, refer to the table below.

Number of auto switches

Nil	2 pcs.
S	1 pc.
n	"n" pcs.

Built-in Magnet Cylinder Model

If a built-in magnet cylinder without an auto switch is required, there is no need to enter the symbol for the auto switch.
(Example) CDM2RKB32-100

Applicable Auto Switch/Refer to pages 1263 to 1371 for further information on auto switches.

Type	Special function	Electrical entry	Indicator light	Wiring (Output)	Load voltage DC		Load voltage AC	Auto switch model	Lead wire length (m) 0.5 (Nil)	1 (M)	3 (L)	5 (Z)	None (N)	Pre-wired connector	Applicable load	
Solid state switch	——	Grommet	Yes	3-wire (NPN)	24V	5V, 12V	—	**M9N**	●	●	●	○	—	○	IC circuit	Relay, PLC
				3-wire (PNP)				**M9P**	●	●	●	○	—	○		
				2-wire		12V		**M9B**	●	●	●	○	—	○	—	
		Connector						**H7C**	●	—	●	●	●	—		
		Terminal conduit		3-wire (NPN)		5V, 12V		**G39A**	—	—	—	—	●	—	IC circuit	
				2-wire		12V		**K39A**	—	—	—	—	●	—	—	
	Diagnostic indication (2-color indication)	Grommet		3-wire (NPN)		5V,12V		**M9NW**	●	●	●	○	—	○	IC circuit	
				3-wire (PNP)				**M9PW**	●	●	●	○	—	○		
				2-wire		12V		**M9BW**	●	●	●	○	—	○	—	
	Water resistant (2-color indication)							**H7BA**	—	—	●	○	—	○		
	With diagnostic output (2-color indication)			4-wire (NPN)		5V, 12V		**H7NF**	●	—	●	○	—	○	IC circuit	
Reed switch	——	Grommet	Yes	3-wire (NPN equivalent)	—	5V	—	**A96**	●	—	●	—	—	—	IC circuit	—
			No	2-wire	24V	12V	100V	**A93**	●	—	●	—	—	—	—	Relay, PLC
			Yes				100V or less	**A90**	●	—	●	—	—	—	IC circuit	
			No				100V, 200V	**B54**	●	—	●	●	—	—	—	
		Connector	Yes				200V or less	**B64**	●	—	●	—	—	—		
			No				—	**C73C**	●	—	●	●	●	—		
		Terminal conduit	Yes				24V or less	**C80C**	●	—	●	●	●	—	IC circuit	
							—	**A33A**	—	—	—	—	●	—	—	PLC
		DIN terminal					100V, 200V	**A34A**	—	—	—	—	●	—		Relay, PLC
								A44A	—	—	—	—	●	—		
	Diagnostic indication (2-color indication)	Grommet			—		—	**B59W**	●	—	●	—	—	—		

∗ Lead wire length symbols: 0.5 m ·····Nil (Example) M9NW
1 m ····· M (Example) M9NWM
3 m ····· L (Example) M9NWL
5 m ····· Z (Example) M9NWZ
None ····· N (Example) H7CN

∗ Solid state auto switches marked with "○" are produced upon receipt of order.
∗ D-A9□V□/M9□V□/M9□WV□ and D-M9□A(V)L cannot be mounted.
∗ Do not indicate suffix "N" for no lead wire on D-A3□A/A44A/G39A/K39A models.

∗ Since there are other applicable auto switches than listed above, refer to page 218 for details.
∗ For details about auto switches with pre-wired connector, refer to pages 1328 and 1329.
∗ D-A9□/M9□/M9□W auto switches are shipped together (not assembled). (However, auto switch mounting brackets are assembled when being shipped.)

Series CM2R direct mount cylinder can be installed directly through the use of a square rod cover.

Non-rotating accuracy
A type of cylinder in which the rod does not rotate because of its hexagonal shape Cylinder

ø20, ø25—±0.7°
ø32, ø40—±0.5°

Space-saving configuration
Because it is a directly mounted style without using brackets, its overall length is shorter, and its installation pitch can be made smaller. Thus, the space that is required for installation has been dramatically reduced.

Improved installation accuracy and strength
A centering boss has been provided to improve the installation accuracy. Also, because it is the directly mounted style, the strength has been increased.

Two styles of installation
Two styles of installations are available and can be selected according to the purpose: the front mounting style or the bottom mounting style.

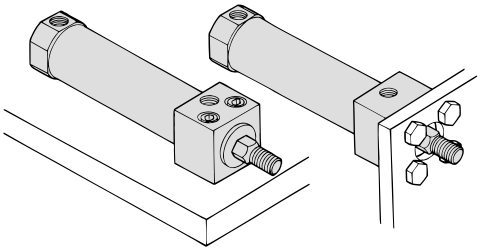

Bottom mounting style **Front mounting style**

JIS Symbol
Double acting

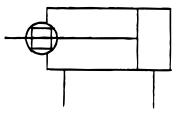

Made to Order Specifications
(For details, refer to pages 1373 to 1498.)

Symbol	Specifications
—XA□	Change of rod end shape
—XB6	Heat resistant cylinder (150°C)
—XC3	Special port location
—XC6	Piston rod and rod end nut made of stainless steel
—XC8	Adjustable stroke cylinder/Adjustable extension type
—XC9	Adjustable stroke cylinder/Adjustable retraction type
—XC11	Dual stroke cylinder/Single rod type
—XC13	Auto switch mounting rail style
—XC20	Head cover axial port
—XC22	Fluororubber seals
—XC25	No fixed orifice of connecting port

Specifications

Bore size (mm)	20	25	32	40
Rod non-rotating accuracy	±0.7°		±0.5°	
Action	Double acting, Single rod			
Fluid	Air			
Proof pressure	1.5 MPa			
Maximum operating pressure	1.0 MPa			
Minimum operating pressure	0.05 MPa			
Ambient and fluid temperature	Without auto switch: −10 to 70°C (No freezing) With auto switch: −10 to 60°C (No freezing)			
Lubrication	Not required (Non-lube)			
Stroke length tolerance	$^{+1.4}_{0}$ mm			
Piston speed	50 to 500 mm/s			
Cushion	Rubber bumper			
Allowable kinetic energy	0.27 J	0.4 J	0.65 J	1.2 J

Standard Stroke

Bore size (mm)	Standard stroke (mm) (1)
20	25, 50, 75, 100, 125, 150
25	25, 50, 75, 100, 125, 150, 200
32	25, 50, 75, 100, 125, 150, 200
40	25, 50, 75, 100, 125, 150, 200, 250, 300

Note 1) Other intermediate strokes can be manufactured upon receipt of order.
∗ Manufacture of intermediate strokes at 1 mm intervals is possible. (Spacers are not used.)
Note 2) The maximum limit is 1000 stroke, but the products that exceed the standard stroke might not be able to fulfill the specifications.

Tightening Torque: Tighten the cylinder mounting bolts for the bottom mounting Style (Series CM2RA) with the following tightening torque.

Bore size (mm)	Hexagon socket head cap bolt size	Tightening torque(N·m)
20	M5 x 0.8	2.4 to 3.6
25	M6	4.2 to 6.2
32	M8	10.0 to 15.0
40	M10	19.6 to 29.4

Refer to pages 214 to 218 for cylinders with an auto switch.

- Minimum stroke for auto switch mounting
- Proper auto switch mounting position (detection at stroke end) and mounting height
- Operating range
- Switch mounting bracket: Part no.

Copper/Fluorine-free

20-CM2RK Mounting style | Bore size — Stroke

Copper/fluorine-free

The type which prevents copper based ions from generating by changing the copper based materials into electroless nickel plated treatment or non-copper materials in order to eliminate the effects by copper based ions or fluororesins over the color cathode ray tube.



Specifications

Action	Double acting, Single rod
Bore size (mm)	ø20, ø25, ø32, ø40
Max. operating pressure	1.0 MPa
Min. operating pressure	0.05 MPa
Cushion	Rubber bumper
Piston speed	50 to 500 mm/s
Mounting	Bottom mounting style, Front mounting style

∗ Auto switch can be mounted.

Accessory

Accessory / Mounting	Standard equipment	Option	
	Rod end nut	Single knuckle joint	Double knuckle joint (With pin)∗
Bottom mounting style	●	●	●
Front mounting style	●	●	●

∗ Knuckle pin and retaining ring (cotter pin for bore size ø40) are shipped together.

Mass

(kg)

Bore size (mm)		20	25	32	40
Basic mass	Bottom mounting style	0.14	0.23	0.32	0.63
	Front mounting style	0.14	0.22	0.32	0.62
Additional mass per each 50 mm of stroke		0.04	0.07	0.09	0.14

Calculation: (Example) **CM2RKA32-100** (ø32, 100 stroke, Bottom mounting)
- Basic mass·····0.32 kg
- Additional mass·····0.09 kg
- Cylinder stroke·····100 mm
  0.32 + 0.09 x 100/50 = 0.50 kg

⚠ Precautions

Be sure to read before handling. Refer to front matters 54 and 55 for Safety Instructions and pages 3 to 11 for Actuator and Auto Switch Precautions.

Caution on Handling/Disassembly

⚠ Warning

1. **Do not rotate the cover.**
   If a cover is rotated when installing a cylinder or screwing a fitting into the port, it is likely to damage the junction part with cover.
2. **Do not operate with the cushion needle in a fully closed condition.**
   Using it in the fully closed state will cause the cushion seal to be damaged. When adjusting the cushion needle, use the “Hexagon wrench key: nominal size 1.5”.
3. **Do not open the cushion needle wide excessively.**
   If the cushion needle were set to be completely wide (more than 3 turns from fully closed), it would be equivalent to the cylinder with no cushion, thus making the impacts extremely high. Do not use it in such a way. Besides, using with fully open could give damage to the piston or cover.
4. **In the case of exceeding the standard stroke length, implement an intermediate support.**
   When using cylinder with longer stroke, implement an intermediate support for preventing the joint of rod cover and cylinder tube from being broken by vibration or external load.

⚠ Caution

1. **Avoid using the air cylinder in such a way that rotational torque would be applied to the piston rod.**
   If rotational torque is applied, the non-rotating guide will become deformed, thus affecting the non-rotating accuracy.
   Refer to the table below for the approximate values of the allowable range of rotational torque.

Allowable rotational torque (N·m or less)	ø20	ø25	ø32	ø40
	0.2	0.25	0.25	0.44

   To screw a bracket or a nut onto the threaded portion at the tip of the piston rod, make sure to retract the piston rod entirely, and place a wrench over the flat portion of the rod that protrudes.
   Tighten it by giving consideration to prevent the tightening torque from being applied to the non-rotating guide.

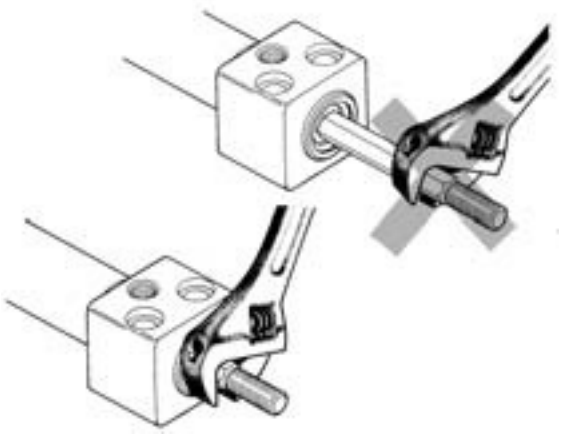

2. **When replacing rod seals, please contact SMC.**
   Air leakage may be happened, depending on the position in which a rod seal is fitted. Thus, please contact SMC when replacing them.
3. **Not able to disassemble.**
   Cover and cylinder tube are connected to each other by caulking method, thus making it impossible to disassemble. Therefore, internal parts of a cylinder other than rod seal are not replaceable.
4. **Do not touch the cylinder during operation.**
   Use caution when handling a cylinder, which is running at a high speed and a high frequency, because the surface of a cylinder tube could get so hot enough as to cause you get burned.

Construction

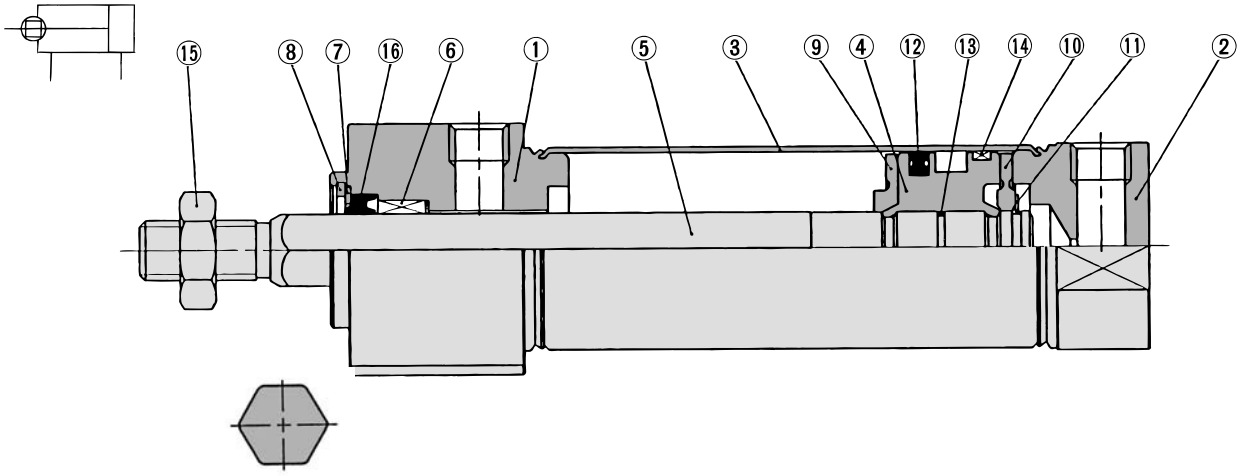

Rod section

Component Parts

No.	Description	Material	Note
1	**Rod cover**	Aluminum alloy	Clear anodized
2	**Head cover**	Aluminum alloy	Clear anodized
3	**Cylinder tube**	Stainless steel	
4	**Piston**	Aluminum alloy	Chromated
5	**Piston rod**	Stainless steel	
6	**Non-rotating guide**	Copper oil-impregnated sintered alloy	
7	**Seal retainer**	Carbon steel	Nickel plated
8	**Retaining ring**	Carbon steel	Phosphate coated
9	**Bumper A**	Urethane	
10	**Bumper B**	Urethane	
11	**Retaining ring**	Stainless steel	
12	**Piston seal**	NBR	
13	**Piston gasket**	NBR	
14	**Wear ring**	Resin	
15	**Rod end nut**	Carbon steel	Nickel plated

Replacement Part: Seal

No.	Description	Material	Part no.			
			20	**25**	**32**	**40**
16	**Rod seal**	NBR	PDR-8W	PDR-10W	PDR-12W	PDR-14W

∗ Since the seal kit does not include a grease pack, order it separately.
Grease pack part no.: GR-S-010 (10 g)

Bottom Mounting Style

CM2RKA Bore size — Stroke

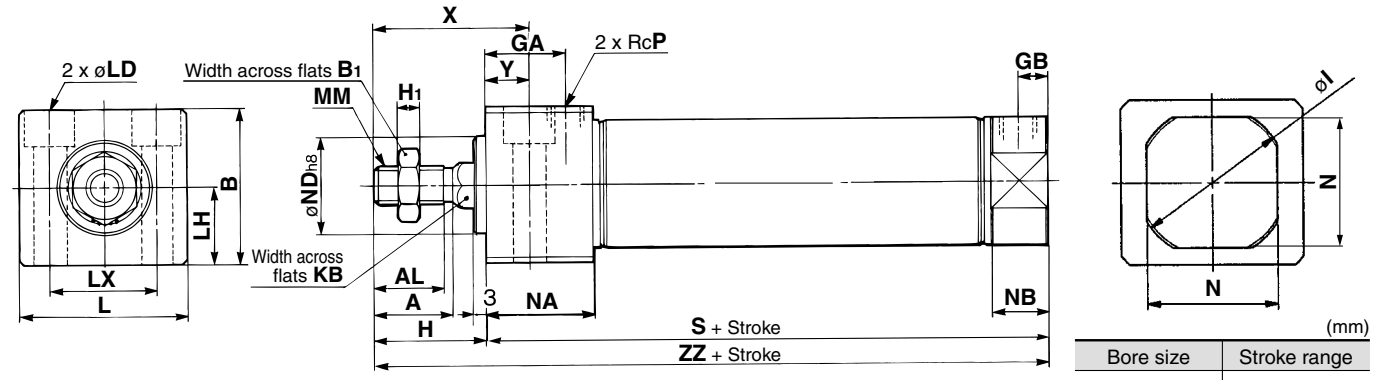

(mm)

Bore size	Stroke range
20	1 to 150
25	1 to 200
32	1 to 200
40	1 to 300

(mm)

Bore size	A	AL	B	B_1	GA	GB	H	H_1	I	KB	L	LD	LH	LX	MM	N	NA	NB	ND	P	S	X	Y	ZZ
20	18	15.5	30.3	13	22	8	27	5	28	8.2	33.5	ø5.5, ø9.5 counterbore depth 6.5	15	21	M8 x 1.25	24	29	15	$20^{\ 0}_{-0.033}$	1/8	76	39	12	103
25	22	19.5	36.3	17	22	8	31	6	33.5	10.2	39	ø6.6, ø11 counterbore depth 7.5	18	25	M10 x 1.25	30	29	15	$26^{\ 0}_{-0.033}$	1/8	76	43	12	107
32	22	19.5	42.3	17	22	8	31	6	37.5	12.2	47	ø9, ø14 counterbore depth 10	21	30	M10 x 1.25	34.5	29	15	$26^{\ 0}_{-0.033}$	1/8	78	43	12	109
40	24	21	52.3	22	27	11	34	8	46.5	14.2	58.5	ø11, ø17.5 counterbore depth 12.5	26	38	M14 x 1.5	42.5	37.5	21.5	$32^{\ 0}_{-0.039}$	1/4	104	49	15	138

Front Mounting Style

CM2RKB Bore size — Stroke

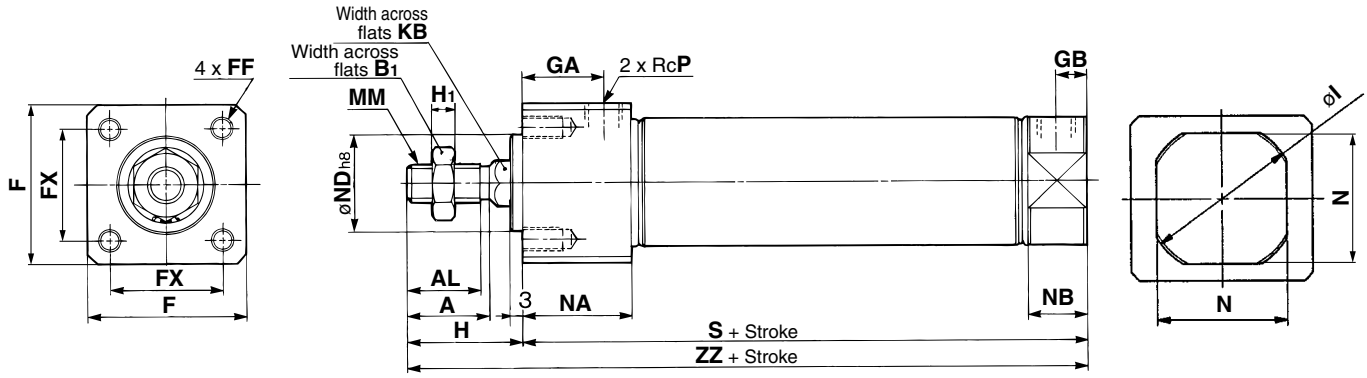

(mm)

Bore size	Stroke range
20	1 to 150
25	1 to 200
32	1 to 200
40	1 to 300

(mm)

Bore size	A	AL	B_1	F	FF	FX	GA	GB	H	H_1	I	KB	MM	N	NA	NB	ND	P	S	ZZ
20	18	15.5	13	30.4	M5 x 0.8 depth 9	22	22	8	27	5	28	8.2	M8 x 1.25	24	29	15	$20^{\ 0}_{-0.033}$	1/8	76	103
25	22	19.5	17	36.4	M6 x 1 depth 11	26	22	8	31	6	33.5	10.2	M10 x 1.25	30	29	15	$26^{\ 0}_{-0.033}$	1/8	76	107
32	22	19.5	17	42.4	M6 x 1 depth 11	30	22	8	31	6	37.5	12.2	M10 x 1.25	34.5	29	15	$26^{\ 0}_{-0.033}$	1/8	78	109
40	24	21	22	52.4	M8 x 1.25 depth 14	36	27	11	34	8	46.5	14.2	M14 x 1.5	42.5	37.5	21.5	$32^{\ 0}_{-0.039}$	1/4	104	138

Air Cylinder: Low Friction Type
Double Acting, Single Rod
Series CM2Q
ø20, ø25, ø32, ø40

Use the new **"Smooth Cylinder Series CM2Y"** to realize both-direction low friction and low-speed operation.
(Refer to **Best Pneumatics No. 3**.)

How to Order

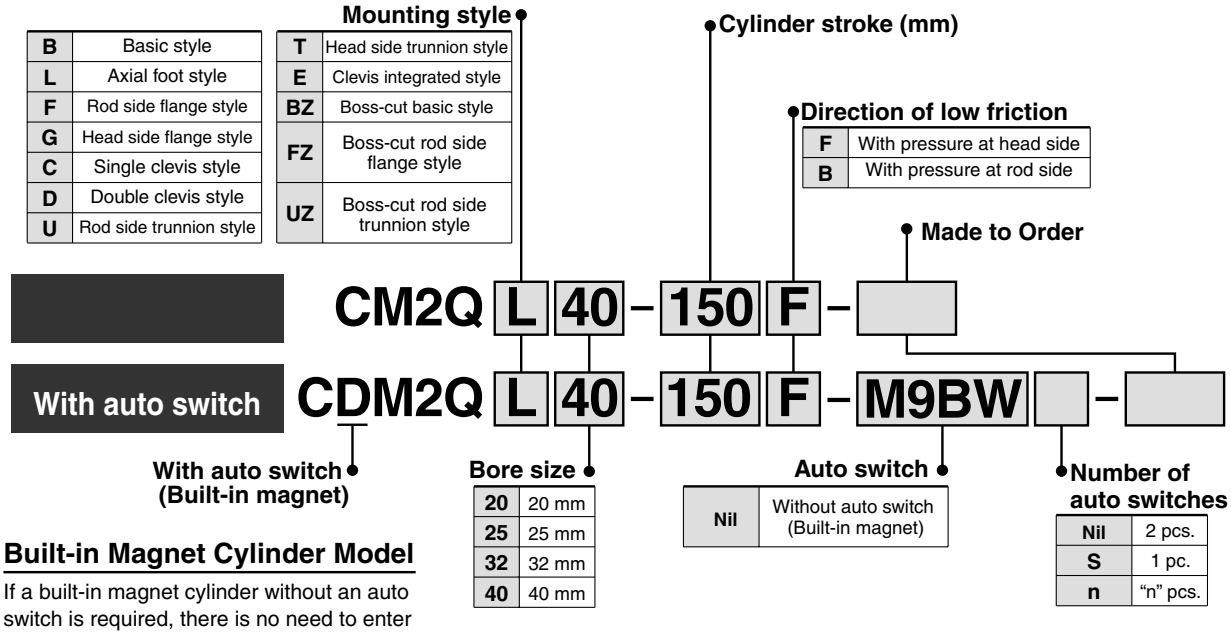

Built-in Magnet Cylinder Model

If a built-in magnet cylinder without an auto switch is required, there is no need to enter the symbol for the auto switch.
(Example) CDM2QF32-100B

Air Cylinder: Centralized Piping Type
Double Acting, Single Rod
Series CM2□P
ø20, ø25, ø32, ø40

How to Order

Cylinder stroke (mm)
(Refer to "Standard Stroke" on page 200.)

Mounting style

B	Basic style
F	Rod side flange style
U	Rod side trunnion style

Rod boot

Nil	None
J	Nylon tarpaulin
K	Heat resistant tarpaulin

Made to Order
(Refer to page 200 for details.)

	CM2	F	32	□	P	–	150	□	–	□	
With auto switch	CDM2	F	32	□	P	–	150	□	–	M9BW	□ – □

With auto switch (Built-in magnet)

Bore size

20	20 mm
25	25 mm
32	32 mm
40	40 mm

Port thread type

Nil	Rc
TN	NPT
TF	G

Centralized piping type

Number of auto switches

Nil	2 pcs.
S	1 pc.
n	"n" pcs.

Auto switch

Nil	Without auto switch

∗ For the applicable auto switch model, refer to the table below.

Built-in Magnet Cylinder Model

If a built-in magnet cylinder without an auto switch is required, there is no need to enter the symbol for the auto switch.
(Example) CDM2B40P-100

Applicable Auto Switch/Refer to pages 1263 to 1371 for further information on auto switches.

Type	Special function	Electrical entry	Indicator light	Wiring (Output)	Load voltage DC		Load voltage AC	Auto switch model	Lead wire length (m) 0.5 (Nil)	1 (M)	3 (L)	5 (Z)	None (N)	Pre-wired connector	Applicable load	
Solid state switch	——	Grommet	Yes	3-wire (NPN)	24V	5V, 12V	—	M9N	●	●	●	○	—	○	IC circuit	Relay, PLC
				3-wire (PNP)				M9P	●	●	●	○	—	○		
				2-wire		12V		M9B	●	●	●	○	—	○	—	
		Connector						H7C	●	—	●	●	●	—		
	Diagnostic indication (2-color indication)	Grommet		3-wire (NPN)		5V, 12V		M9NW	●	●	●	○	—	○	IC circuit	
				3-wire (PNP)				M9PW	●	●	●	○	—	○		
				2-wire		12V		M9BW	●	●	●	○	—	○	—	
	Water resistant (2-color indication)							H7BA	—	—	●	○	—	○		
	With diagnostic output (2-color indication)			4-wire (NPN)		5V, 12V		H7NF	●	—	●	○	—	○	IC circuit	
Reed switch	——	Grommet	Yes	3-wire (NPN equivalent)	—	5V	—	A96	●	—	●	—	—	—	IC circuit	—
			Yes	2-wire	24V	12V	100V	A93	●	—	●	—	—	—	—	Relay, PLC
			No				100V or less	A90	●	—	●	—	—	—	IC circuit	
			Yes				100V, 200V	B54	●	—	●	●	—	—	—	
			No				200V or less	B64	●	—	●	—	—	—		
		Connector	Yes				—	C73C	●	—	●	●	●	—		
			No				24V or less	C80C	●	—	●	●	●	—	IC circuit	
	Diagnostic indication (2-color indication)		Yes			—	—	B59W	●	—	●	—	—	—	—	

∗ Lead wire length symbols: 0.5 m ·····Nil (Example) M9NW
1 m ····· M (Example) M9NWM
3 m ····· L (Example) M9NWL
5 m ····· Z (Example) M9NWZ
None ····· N (Example) H7CN

∗ Solid state auto switches marked with "○" are produced upon receipt of order.
∗ D-A9□V□/M9□V□/M9□WV□ and D-M9□A(V)L cannot be mounted.

∗ Since there are other applicable auto switches than listed above, refer to page 218 for details.
∗ For details about auto switches with pre-wired connector, refer to pages 1328 and 1329.
∗ D-A9□/M9□/M9□W auto switches are shipped together (not assembled). (However, auto switch mounting brackets are assembled when being shipped.)

A cylinder in which two piping ports are provided in the head cover, enabling pipes to be connected only in the axial direction.



JIS Symbol

Double acting,
Single rod

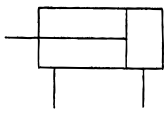

Specifications

Bore size (mm)	20	25	32	40
Action	Double acting, Single rod			
Fluid	Air			
Proof pressure	1.5 MPa			
Maximum operating pressure	1.0 MPa			
Minimum operating pressure	0.05 MPa			
Ambient and fluid temperature	Without auto switch: −10 to 70°C (No freezing) With auto switch: −10 to 60°C (No freezing)			
Lubrication	Not required (Non-lube)			
Stroke length tolerance	$^{+1.4}_{0}$ mm			
Cushion	Rubber bumper			
Piston speed	50 to 700 mm/s	50 to 650 mm/s	50 to 590 mm/s	50 to 420 mm/s
Allowable kinetic energy	0.27 J	0.4 J	0.65 J	1.2 J

Standard Stroke

Bore size (mm)	Standard stroke (1) (mm)	Maximum manufacturable stroke (2) (mm)
20	25, 50, 75, 100, 125, 150 200, 250, 300	1000
25		
32		
40		

Note 1) Other intermediate strokes can be manufactured upon receipt of order. Manufacture of intermediate strokes at 1 mm intervals is possible. (Spacers are not used.)

Note 2) When exceeding 300 strokes, the allowable maximum stroke length is determined by the stroke selection table (front matter 28).

Made to Order Specifications

(For details, refer to pages 1373 to 1498.)

Symbol	Specifications
—XA□	Change of rod end shape
—XC4	With heavy duty scraper
—XC6	Piston rod and rod end nut made of stainless steel
—XC29	Double knuckle joint with spring pin
—XC52	Mounting nut with set screw

Mounting Style and Accessory

Mounting \ Accessory	Standard equipment		Option		
	Mounting nut	Rod end nut	Single knuckle joint	Double knuckle joint (With pin)*	Rod boot
Basic style	● (1 pc.)	●	●	●	●
Rod side Flange side style	● (1)	●	●	●	●
Rod side trunnion style	● (1)	●	●	●	●

* Pin and retaining ring (cotter pin for bore size ø40) are shipped together with double knuckle joint.

Mounting Bracket Part No.

Mounting bracket	Min. order	Bore size (mm)				Description (for min. order)
		20	25	32	40	
Flange	1	CM-F020B	CM-F032B		CM-F040B	1 flange
Trunnion (With nuts)	1	CM-T020B	CM-T032B		CM-T040B	1 trunnion, 1 trunnion nut

* Order 2 foot brackets for each cylinder unit.

⚠ Precautions

Be sure to read before handling. Refer to front matters 54 and 55 for Safety Instructions and pages 3 to 11 for Actuator and Auto Switch Precautions.

Refer to pages 214 to 218 for cylinders with auto switches.

- Minimum stroke for auto switch mounting
- Proper auto switch mounting position (detection at stroke end) and mounting height
- Operating range
- Switch mounting bracket: Part no.

Rod Boot Material

Symbol	Rod boot material	Maximum ambient temperature
J	Nylon tarpaulin	70°C
K	Heat resistant tarpaulin	110°C*

* Maximum ambient temperature for the rod boot itself.

Mass

(kg)

Bore size (mm)		**20**	**25**	**32**	**40**
Basic mass	Basic style	0.14	0.21	0.27	0.58
	Rod side flange style	0.20	0.30	0.36	0.70
	Rod side trunnion style	0.18	0.28	0.33	0.68
Additional mass per each 50 mm of stroke		0.05	0.08	0.10	0.17
Option bracket	Single knuckle joint	0.06	0.06	0.06	0.23
	Double knuckle (with pin)	0.07	0.07	0.07	0.20

Calculation: (Example) **CM2F32P-100**
- Basic mass·····0.36
- Additional mass·····0.10
- Cylinder stroke·····100 stroke

0.36 + 0.10 x 100/50 = 0.56 kg

Copper/Fluorine-free

20-CM2 Mounting style Bore size P — Stroke

Copper/fluorine-free

The type which prevents copper based ions from generating by changing the copper based materials into electroless nickel plated treatment or non-copper materials in order to eliminate the effects by copper based ions or fluororesins over the color cathode ray tube.



Specifications

Action		Double acting, Single rod
Bore size (mm)		ø20, ø25, ø32, ø40
Max. operating pressure		1.0 MPa
Min. operating pressure		0.05 MPa
Piston speed	**ø20**	50 to 700 mm/s
	ø25	50 to 650 mm/s
	ø32	50 to 590 mm/s
	ø40	50 to 420 mm/s
Mounting		Basic style, Rod side flange style, Rod side trunnion style

* Auto switch can be mounted.

Construction

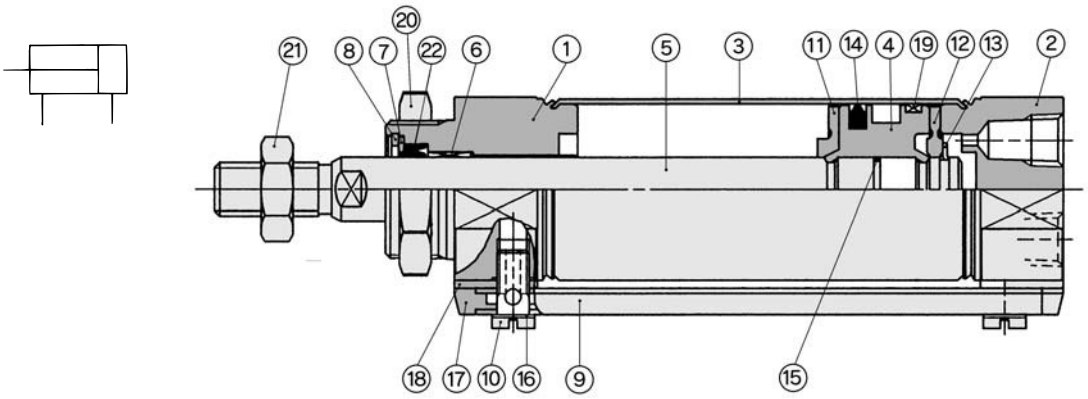

Component Parts

No.	Description	Material	Note
1	**Rod cover**	Aluminum alloy	Clear anodized
2	**Head cover**	Aluminum alloy	Clear anodized
3	**Cylinder tube**	Stainless steel	
4	**Piston**	Aluminum alloy	Chromated
5	**Piston rod**	Carbon steel	Hard chrome plated
6	**Bushing**	Copper oil-impregnated sintered alloy	
7	**Seal retainer**	Stainless steel	
8	**Retaining ring**	Carbon steel	Phosphate coated
9	**Pipe**	Aluminum alloy	Clear anodized
10	**Stud**	Brass	Electroless nickel plated
11	**Bumper A**	Urethane	
12	**Bumper B**	Urethane	

No.	Description	Material	Note
13	**Retaining ring**	Stainless steel	
14	**Piston seal**	NBR	
15	**Piston gasket**	NBR	
16	**Gasket**	Resin	
17	**Pipe gasket**	Urethane rubber	
18	**Spacer gasket**	Resin	Except ø25
19	**Wear ring**	Resin	
20	**mounting nut**	Carbon steel	Nickel plated
21	**Rod end nut**	Carbon steel	Nickel plated

Replacement Part: Seal

No.	Description	Material	Part no.			
			20	**25**	**32**	**40**
22	**Rod seal**	NBR	PDU-8Z	PDU-10Z	PDU-12LZ	PDU-14Z

∗ Since the seal kit does not include a grease pack, order it separately.
Grease pack part no.: GR-S-010 (10 g)

Basic Style (B)

Bore size P — **Stroke**

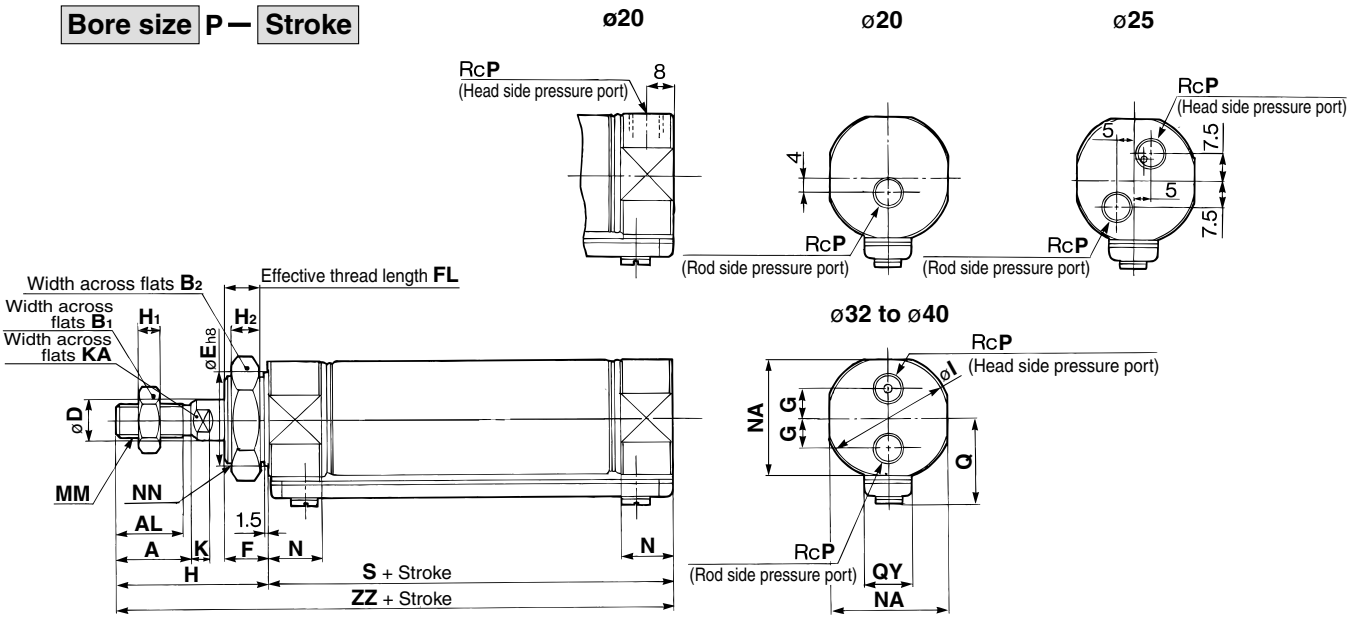

(mm)

Bore size	A	AL	B_1	B_2	D	E	F	FL	G	H	H_1	H_2	I	K	KA	MM	N	NA	NN	P	Q	QY	S	ZZ
20	18	15.5	13	26	8	$20^{0}_{-0.033}$	13	10.5	—	41	5	8	28	5	6	M8 x 1.25	15	24	M20 x 1.5	1/8	19.8	14	62	103
25	22	19.5	17	32	10	$26^{0}_{-0.033}$	13	10.5	—	45	6	8	33.5	5.5	8	M10 x 1.25	15	30	M26 x 1.5	1/8	22	14	62	107
32	22	19.5	17	32	12	$26^{0}_{-0.033}$	13	10.5	9	45	6	8	37.5	5.5	10	M10 x 1.25	15	34.5	M26 x 1.5	1/8	25.8	16	64	109
40	24	21	22	41	14	$32^{0}_{-0.039}$	16	13.5	10.5	50	8	10	46.5	7	12	M14 x 1.5	21.5	42.5	M32 x 2	1/4	29.8	16	88	138

∗ The dimensions of air cylinders with a rod boot are the same as the standard, double acting/single rod boss-cut style. Refer to page 135.

SMC

Rod Side Flange Style (F)

CM2F Bore size P— Stroke

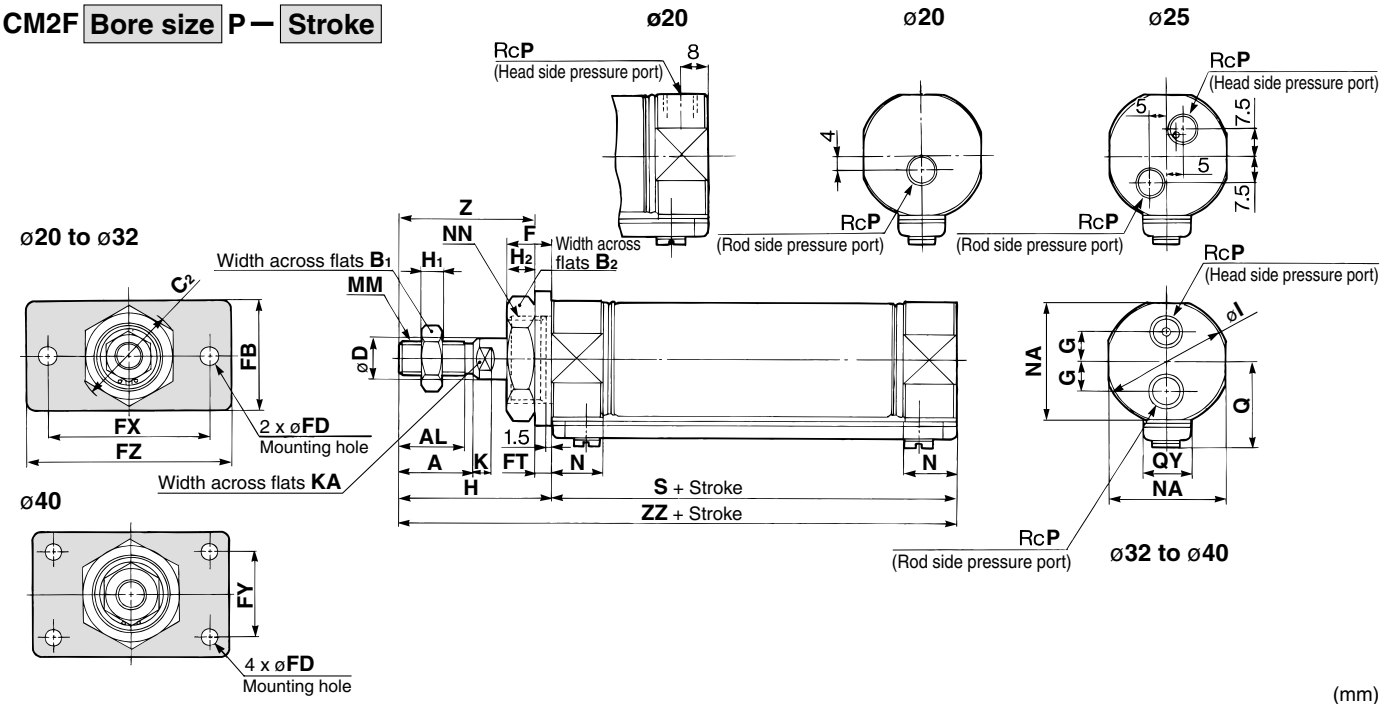

(mm)

Bore size	A	AL	B_1	B_2	C_2	D	F	FB	FD	FT	FX	FY	FZ	G	H	H_1	H_2	I	K	KA	MM	N	NA	NN	P	Q	QY	S	Z	ZZ
20	18	15.5	13	26	30	8	13	34	7	4	60	—	75	—	41	5	8	28	5	6	M8 x 1.25	15	24	M20 x 1.5	1/8	19.8	14	62	37	103
25	22	19.5	17	32	37	10	13	40	7	4	60	—	75	—	45	6	8	33.5	5.5	8	M10 x 1.25	15	30	M26 x 1.5	1/8	22	14	62	41	107
32	22	19.5	17	32	37	12	13	40	7	4	60	—	75	9	45	6	8	37.5	5.5	10	M10 x 1.25	15	34.5	M26 x 1.5	1/8	25.8	16	64	41	109
40	24	21	22	41	47.3	14	16	52	7	5	66	36	82	10.5	50	8	10	46.5	7	12	M14 x 1.5	21.5	42.5	M32 x 2	1/4	29.8	16	88	45	138

* The dimensions of air cylinders with a rod boot are the same as the standard, double acting/single rod boss-cut style. Refer to page 137.

Rod Side Trunnion Style (U)

CM2U Bore size P— Stroke

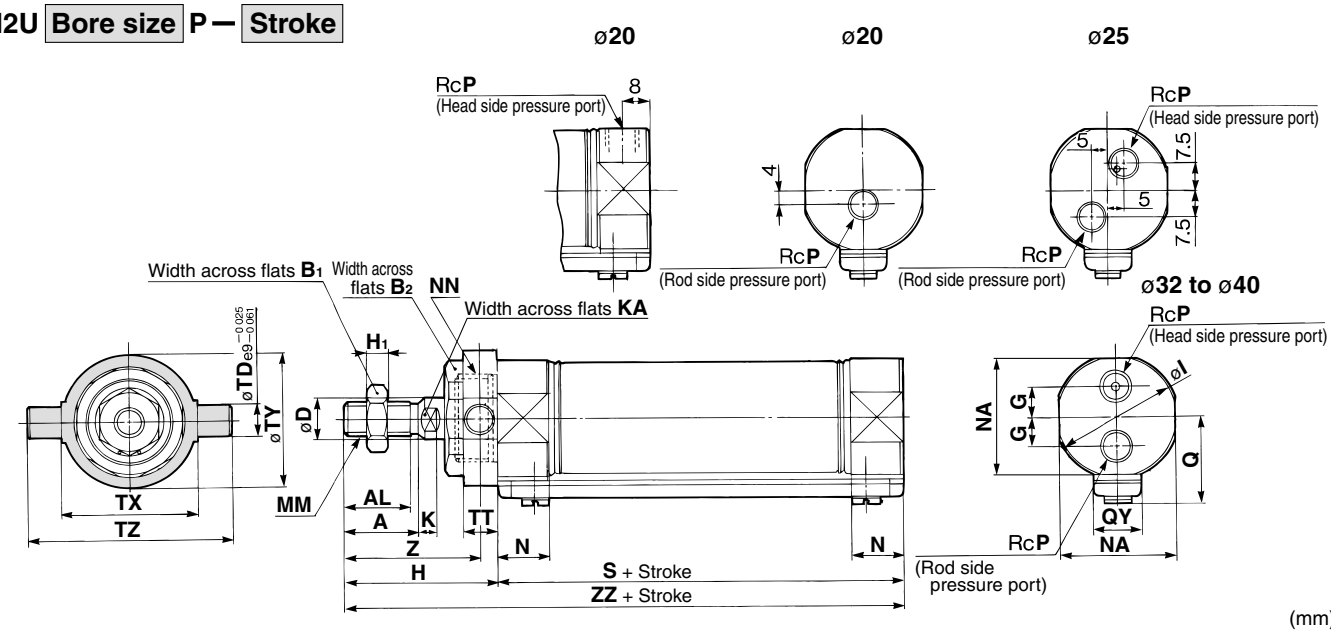

(mm)

Bore size	A	AL	B_1	B_2	D	G	H	H_1	I	K	KA	MM	N	NA	NN	P	Q	QY	S	TD	TT	TX	TY	TZ	Z	ZZ
20	18	15.5	13	26	8	—	41	5	28	5	6	M8 x 1.25	15	24	M20 x 1.5	1/8	19.8	14	62	8	10	32	32	52	36	103
25	22	19.5	17	32	10	—	45	6	33.5	5.5	8	M10 x 1.25	15	30	M26 x 1.5	1/8	22	14	62	9	10	40	40	60	40	107
32	22	19.5	17	32	12	9	45	6	37.5	5.5	10	M10 x 1.25	15	34.5	M26 x 1.5	1/8	25.8	16	64	9	10	40	40	60	40	109
40	24	21	22	41	14	10.5	50	8	46.5	7	12	M14 x 1.5	21.5	42.5	M32 x 2	1/4	29.8	16	88	10	11	53	53	77	44.5	138

* The dimensions of air cylinders with a rod boot are the same as the standard, double acting/single rod boss-cut style. Refer to page 141.

Air Cylinder: With End Lock

Series CBM2

ø20, ø25, ø32, ø40

How to Order

CBM2 L 40 – 150 – H N –

With auto switch **CDBM2 L 40 – 150 – H N – M9BW –**

With auto switch
(Built-in magnet)

Mounting style

B	Basic style
L	Axial foot style
F	Rod side flange style
G	Head side flange style
C	Single clevis style
D	Double clevis style
U	Rod side trunnion style
T	Head side trunnion style

Bore size

20	20 mm
25	25 mm
32	32 mm
40	40 mm

Cylinder stroke (mm)
(Refer to "Standard Stroke" on page 205.)

Cushion

Nil	Rubber bumper
A	Air cushion

Rod boot

Nil	None
J	Nylon tarpaulin
K	Heat resistant tarpaulin

Lock position

H	Head end lock
R	Rod end lock
W	Double end lock

Manual release type

N	Non-lock type
L	Lock type

Auto switch

Nil	Without auto switch

∗ For the applicable auto switch model, refer to the table below.

Number of auto switches

Nil	2 pcs.
S	1 pc.
n	"n" pcs.

Made to Order
(Refer to page 205 for details.)

Built-in Magnet Cylinder Model

If a built-in magnet cylinder without an auto switch is required, there is no need to enter the symbol for the auto switch.
(Example) CDBM2L40-100-HN

Applicable Auto Switch/Refer to pages 1263 to 1371 for further information on auto switches.

Type	Special function	Electrical entry	Indicator light	Wiring (Output)	Load voltage DC	Load voltage AC	Auto switch model	Lead wire length (m) 0.5 (Nil)	1 (M)	3 (L)	5 (Z)	None (N)	Pre-wired connector	Applicable load	
Solid state switch	——	Grommet	Yes	3-wire (NPN)	5V, 12V		**M9N**	●	●	●	○	—	○	IC circuit	Relay, PLC
				3-wire (PNP)			**M9P**	●	●	●	○	—	○		
				2-wire	12V		**M9B**	●	●	●	○	—	○	—	
		Connector					**H7C**	●	—	●	●	●	—		
		Terminal conduit		3-wire (NPN)	5V, 12V		**G39A** **	—	—	—	—	●	—	IC circuit	
				2-wire	24V 12V	—	**K39A** **	—	—	—	—	●	—	—	
	Diagnostic indication (2-color indication)	Grommet		3-wire (NPN)	5V,12V		**M9NW**	●	●	●	○	—	○	IC circuit	
				3-wire (PNP)			**M9PW**	●	●	●	○	—	○		
				2-wire	12V		**M9BW**	●	●	●	○	—	○	—	
	Water resistant (2-color indication)						**H7BA**	—	—	●	○	—	○		
	With diagnostic output (2-color indication)			4-wire (NPN)	5V, 12V		**H7NF**	●	—	●	○	—	○	IC circuit	
Reed switch	——	Grommet	Yes	3-wire (NPN equivalent)	—	5V —	**A96**	●	—	●	—	—	—	IC circuit	—
			No	2-wire	24V	12V 100V	**A93**	●	—	●	—	—	—	—	Relay, PLC
			Yes			100V or less	**A90**	●	—	●	—	—	—	IC circuit	
			No			100V, 200V	**B54** **	●	—	●	●	—	—	—	
		Connector	Yes			200V or less	**B64** **	●	—	●	—	—	—		
			No			—	**C73C**	●	—	●	●	●	—		
						24V or less	**C80C**	●	—	●	●	●	—	IC circuit	
		Terminal conduit	Yes			—	**A33A** **	—	—	—	—	●	—	—	PLC
						100V, 200V	**A34A** **	—	—	—	—	●	—	—	Relay, PLC
		DIN terminal					**A44A** **	—	—	—	—	●	—		
	Diagnostic indication (2-color indication)	Grommet				— —	**B59W**	●	—	●	—	—	—		

∗ Lead wire length symbols: 0.5 m ·····Nil (Example) M9NW
1 m ····· M (Example) M9NWM
3 m ····· L (Example) M9NWL
5 m ····· Z (Example) M9NWZ
None ····· N (Example) H7CN

∗ Solid state auto switches marked with "○" are produced upon receipt of order.
∗ D-A9□V/M9□V/M9□WV and D-M9□A(V)L cannot be mounted.
∗ Do not indicate suffix "N" for no lead wire on D-A3□A/A44A/G39A/K39A models.
∗∗ D-A3□A/A44A/G39A/K39A/B54/B64 cannot be mounted on bore sizes ø20 and ø25 cylinder with air cushion.

∗ Since there are other applicable auto switches than listed above, refer to page 218 for details.
∗ For details about auto switches with pre-wired connector, refer to pages 1328 and 1329.
∗ D-A9□/M9□/M9□W auto switches are shipped together (not assembled). (However, auto switch mounting brackets are assembled when being shipped.)

Holds the cylinder's home position even if the air supply is cut off.

When air is discharged at the stroke end position, the lock engages to maintain the rod in that position.

Non-lock type and lock type are standardized for manual release.

Auto switch is mountable.



Made to Order Specifications
(For details, refer to pages 1373 to 1498.)

Symbol	Specifications
—XA□	Change of rod end shape
—XB6	Heat resistant cylinder (150°C)
—XB9	Low speed cylinder (10 to 50 mm/s)
—XC3	Special port location
—XC4 *	With heavy duty scraper
—XC5	Heat resistant cylinder (110°C)
—XC6	Piston rod and rod end nut made of stainless steel
—XC8 *	Adjustable stroke cylinder/Adjustable extension type
—XC13	Auto switch mounting rail style
—XC22	Fluororubber seals
—XC25	No fixed orifice of connecting port
—XC27	Double clevis pin and double knuckle pin made of stainless steel
—XC29	Double knuckle joint with spring pin
—XC35	With coil scraper
—XC52	Mounting nut with set screw

* Available only for locking at head end

Specifications

Bore size (mm)	20	25	32	40
Type	Pneumatic			
Action	Double acting, Single rod			
Fluid	Air			
Proof pressure	1.5 MPa			
Maximum operating pressure	1.0 MPa			
Minimum operating pressure	0.15 MPa *			
Ambient and fluid temperature	Without auto switch: –10 to 70°C (No freezing) With auto switch: –10 to 60°C (No freezing)			
Cushion	Rubber bumper, Air cushion			
Lubrication	Not required (Non-lube)			
Stroke length tolerance	$^{+1.4}_{0}$ mm			
Piston speed	Rubber bumper	50 to 750 mm/s		
	Air cushion	50 to 1000 mm/s		
Mounting	Basic style, Axial foot style, Rod side flange style, Head side flange style, Single clevis style, Double clevis style, Rod side trunnion style, Head side trunnion style			

* 0.05 MPa for other part than the lock unit

Lock Specifications

Lock position	Head end, Rod end, Double end			
Holding force (Max.) (N)	**ø20**	**ø25**	**ø32**	**ø40**
	215	330	550	860
Backlash	1 mm or less			
Manual release	Non-lock type, Lock type			

Allowable Kinetic Energy

Bore size (mm)		20	25	32	40
Rubber bumper	Allowable kinetic energy (J)	0.27	0.4	0.65	1.2
Air cushion	Effective cushion length (mm)	11.0	11.0	11.0	11.8
	Cushion sectional area (cm^2)	2.09	3.30	5.86	9.08
	Kinetic energy absorbable (J)	0.54	0.78	1.27	2.35

Standard Stroke

Bore size (mm)	Standard stroke (mm)	Long stroke * (mm)	Maximum manufacturable stroke (mm)
20	25, 50, 75, 100, 125, 150, 200, 250, 300	400	1000
25		450	
32		450	
40		500	

* Long stroke applies to the axial foot style and the rod side flange style only.
When using other types of mounting brackets or exceeding the long stroke limit, the maximum allowable stroke will be determined by the stroke selection table listed on front matter 28.
* Manufacture of intermediate strokes at 1 mm intervals is possible. (Spacers are not used.)

Refer to pages 214 to 218 for cylinders with auto switches.

- Minimum stroke for auto switch mounting
- Proper auto switch mounting position (detection at stroke end) and mounting height
- Operating range
- Switch mounting bracket: Part no.

Accessory /For details, refer to pages 144 and 145, since it is the same as Series CM2 standard type.

Standard equipment	Mounting nut, Rod end nut, Clevis pin, Lock release bolt (N type only)
Option	Single knuckle joint, Double knuckle joint (With pin)

∗ Mounting nuts are not equipped to single clevis and double clevis.

Rod Boot Material

Symbol	Rod boot material	Max. ambient temperature
J	Nylon tarpaulin	60°C
K	Heat resistant tarpaulin	110°C ∗

∗ Maximum ambient temperature for the rod boot itself.

Mass

(kg)

Bore size (mm)		20	25	32	40
Basic mass	Basic style	0.14	0.21	0.28	0.56
	Axial foot style	0.29	0.37	0.44	0.83
	Flange style	0.20	0.30	0.37	0.68
	Single clevis	0.18	0.25	0.32	0.65
	Double clevis style	0.19	0.27	0.33	0.69
	Trunnion style	0.18	0.28	0.34	0.66
Additional mass per each 50 mm of stroke		0.04	0.06	0.08	0.13
Accessory	Clevis bracket (With pin)	0.07	0.07	0.14	0.14
	Single knuckle joint	0.06	0.06	0.06	0.23
	Double knuckle joint (With pin)	0.07	0.07	0.07	0.20

Lock Unit Additional Mass

(kg)

Bore size (mm)		20	25	32	40
Manual release non-lock type (N)	Head end lock (H)	0.02	0.02	0.02	0.04
	Rod end lock (R)	0.01	0.01	0.01	0.02
	Double end lock (W)	0.03	0.03	0.03	0.06
Manual release lock type (L)	Head end lock (H)	0.03	0.03	0.03	0.06
	Rod end lock (R)	0.02	0.02	0.02	0.04
	Double end lock (W)	0.05	0.05	0.05	0.10

Calculation: (Example) **CBM2L32-100-HN**
- Basic mass ····· 0.44 (Foot style, ø32)
- Additional mass ····· 0.08/50 stroke
- Cylinder stroke ····· 100 stroke
- Locking mass ····· 0.02 (Locking at head end, Manual release non-locking type)

0.44 + 0.08 x 100/50 + 0.02 = 0.62 kg

Mounting Bracket Part No.

Mounting bracket	Min. order	Bore size (mm)				Description (for min. order)
		20	25	32	40	
Axial foot ∗	2	CM-L020B	CM-L032B		CM-L040B	2 foot, 1 mounting nut
Flange	1	CM-F020B	CM-F032B		CM-F040B	1 flange
Single clevis∗∗	1	CM-C020B	CM-C032B		CM-C040B	1 single clevis, 3 liners
Double clevis (With pin) ∗∗ ∗∗∗	1	CM-D020B	CM-D032B		CM-D040B	1 double clevis, 3 liners, 1 clevis pin, 2 retaining rings
Trunnion (With nut)	1	CM-T020B	CM-T032B		CM-T040B	1 trunnion, 1 trunnion nut

∗ Order 2 foot brackets for each cylinder unit.
∗∗ 3 Liners are attached with a clevis bracket for adjusting the mounting angle.
∗∗∗ Clevis pins and retaining rings (cotter pins for ø40) are attached.

Double Rod Type End Lock Cylinder

CBM2W | **Mounting style** | **Bore size** | **—** | **Stroke** | **— H** | **Manual release type**

Double rod type end lock cylinder

Specifications

Action	Double acting, Double rod
Bore size (mm)	ø20, ø25, ø32, ø40
Max. operating pressure	1.0 MPa
Min. operating pressure	0.15 MPa
Cushion	Rubber bumper
Piston speed	50 to 750 mm/s
Mounting	Basic style, Foot style, Flange style, Trunnion style
Lock position	Head end lock
Maximum manufacturable stroke	500 mm

Note 1) Auto switch can be mounted.
Note 2) Refer to the Precautions on page 210 when mounting flanges and trunnion brackets on the end lock side.
Note 3) When exceeding 300 strokes, the allowable maximum stroke length is determined by the stroke selection table (front matter 28).

Dimensions

Bore size (mm)	H	ZZ
20	41	144
25	45	152
32	45	154
40	50	188

∗ Dimensions for other bore sizes are the same as the double acting single rod model.

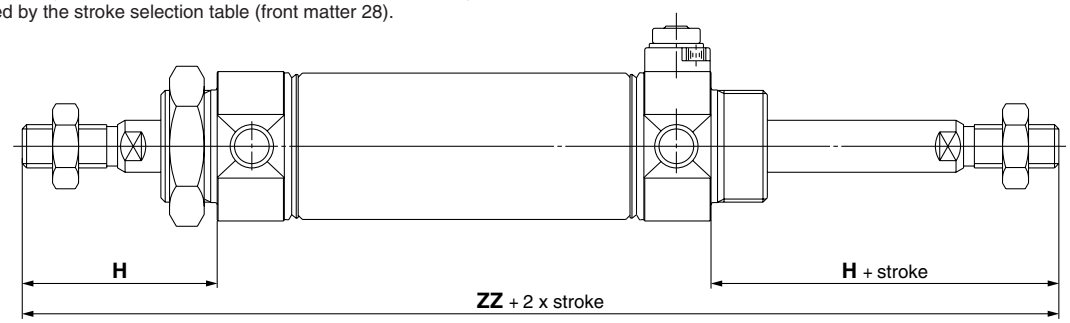

Non-rotating Rod Type End Lock Cylinder

CBM2K | **Mounting style** | **Bore size** | **—** | **Stroke** | **— H** | **Manual release type**

Non-rotating rod type end lock cylinder

Specifications

Action	Double acting, Double rod
Bore size (mm)	ø20, ø25, ø32, ø40
Max. operating pressure	1.0 MPa
Min. operating pressure	0.15 MPa
Cushion	Rubber bumper
Piston speed	50 to 500 mm/s
Mounting	Basic, foot, rod side flange, head side flange, single clevis, double clevis, rod side trunnion, head side trunnion
Lock position	Head end lock
Maximum manufacturable stroke	1000 mm

Note 1) Auto switch can be mounted.
Note 2) Refer to the Precautions on page 210 for the head side flange and head side trunnion styles.
Note 3) When exceeding 300 strokes, the allowable maximum stroke length is determined by the stroke selection table (front matter 28).

Dimensions

Bore size (mm)	KA
20	8.2
25	10.2
32	12.2
40	14.2

∗ Dimensions for other bore sizes are the same as the double acting single rod model.

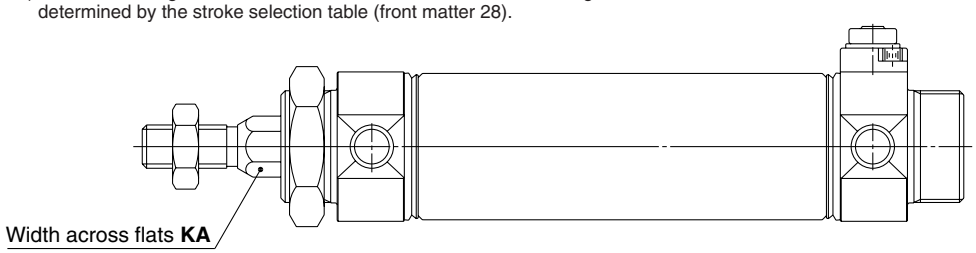

Construction

Head end lock

Manual release (Non-lock type): Suffix N

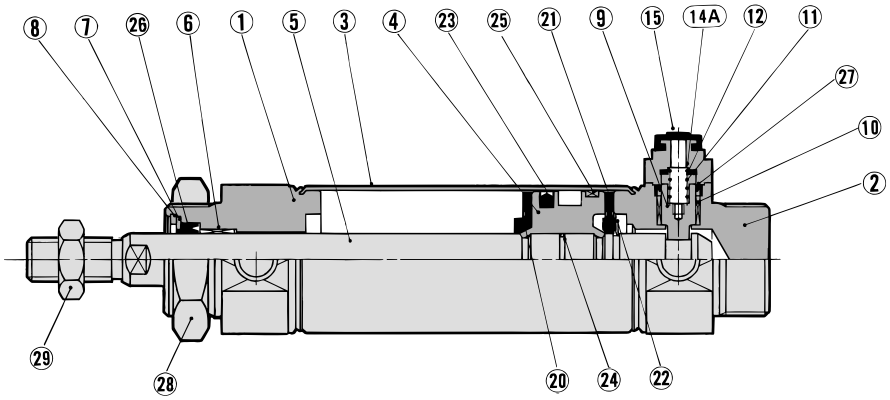

Manual release (Lock type): Suffix L

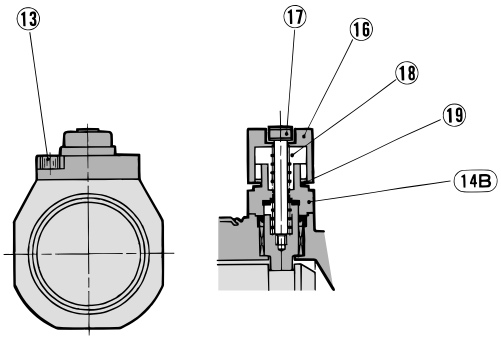

Rod end lock

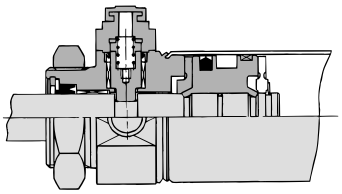

With air cushion

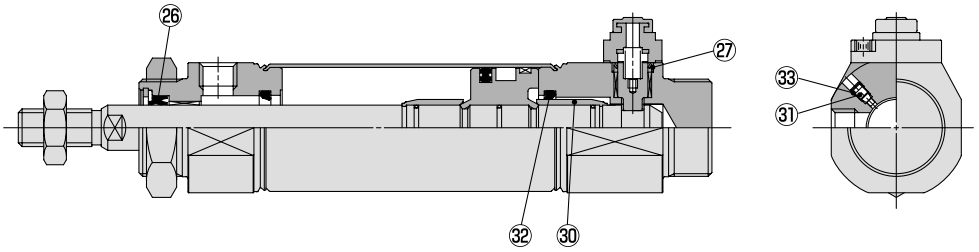

Component Parts

No.	Description	Material	Note
1	**Rod cover**	Aluminum alloy	Clear anodized
2	**Head cover**	Aluminum alloy	Clear anodized
3	**Cylinder tube**	Stainless steel	
4	**Piston**	Aluminum alloy	Chromated
5	**Piston rod**	Carbon steel	Hard chrome plated
6	**Bushing**	Copper oil-impregnated sintered alloy	
7	**Seal retainer**	Stainless steel	
8	**Retaining ring**	Carbon steel	Phosphate coated
9	**Lock piston**	Carbon steel	Hard chrome plated, Heat treated
10	**Lock bushing**	Copper alloy	
11	**Lock spring**	Stainless steel	
12	**Bumper**	Urethane	
13	**Hexagon socket head cap screw**	Alloy steel	Black zinc chromated
14A	**Cap A**	Aluminum die-casted	Black painted
14B	**Cap B**	Carbon steel	Oxide film treated
15	**Rubber cap**	Synthetic rubber	
16	**M/O knob**	Zinc die-casted	Black painted
17	**M/O bolt**	Alloy steel	Black zinc chromated
18	**M/O spring**	Steel wire	Zinc chromated
19	**Stopper ring**	Carbon steel	Zinc chromated
20	**Bumper A**	Urethane	
21	**Bumper B**	Urethane	
22	**Retaining ring**	Stainless steel	
23	**Piston seal**	NBR	
24	**Piston gasket**	NBR	
25	**Wear ring**	Resin	
28	**Mounting nut**	Carbon steel	Nickel plated
29	**Rod end nut**	Carbon steel	Nickel plated
30	**Cushion ring**	Aluminum alloy	Anodized
31	**Cushion needle**	Alloy steel	Electroless nickel plated
32	**Cushion seal**	Urethane	

Component Parts

No.	Description	Material	Note
26	**Rod seal**	NBR	
27	**Lock piston seal**	NBR	
33	**Cushion needle seal**	NBR	

Replacement Parts: Seal Kit

With lock in single end

Bore size (mm)	20	25	32	40
Kit no.	CBM2-20-PS	CBM2-25-PS	CBM2-32-PS	CBM2-40-PS

With lock at double ends

Kit no.	CBM2-20-PS-W	CBM2-25-PS-W	CBM2-32-PS-W	CBM2-40-PS-W

* Seal kit includes ㉖ and ㉗. Order the seal kit, based on each bore size. (Except ㉝.)
* Seal kit includes a grease pack (10 g). Order with the following part number when only the grease pack is needed.
  Grease pack part number: GR-S-010 (10 g)

How to Change Seal Kit

<Removal>

- Remove the retaining ring (A) by using a tool for installing a type C retaining ring for hole. Shut off the port on the rod cover by finger and then pull out the piston rod, and the seal retainer (B) and the rod seal (C) are removed.

<Mounting>

- After applying enough grease on the rod seal, attach in this order, rod seal (C), seal retainer (B) and retaining ring (A).

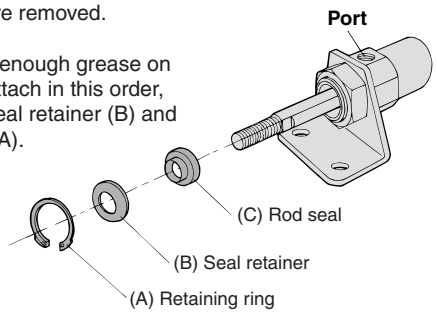

Basic Style (Dimensions are common irrespective of the lock position; rod end, head end, or double end.)

Head end lock: CBM2B Bore size – Stroke -HN

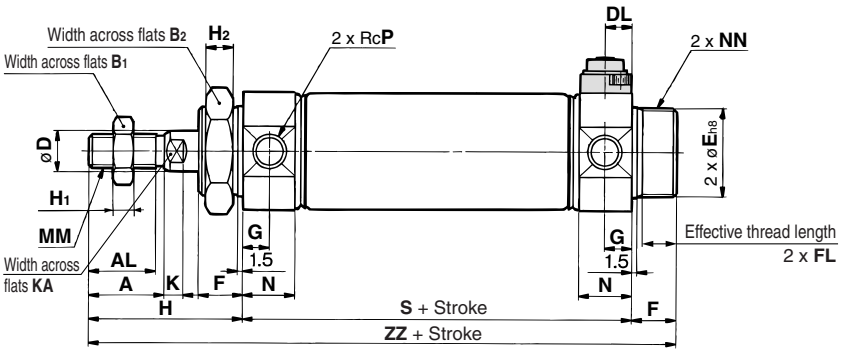

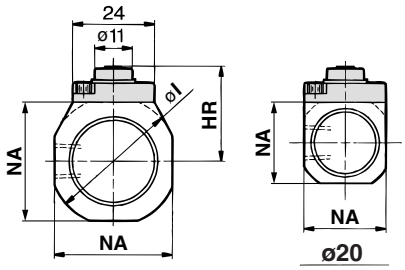

Manual release (Non-lock type): Suffix N

Rod end lock: CBM2B Bore size – Stroke -RN

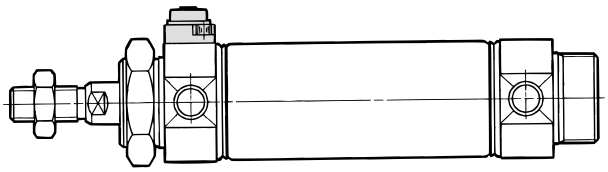

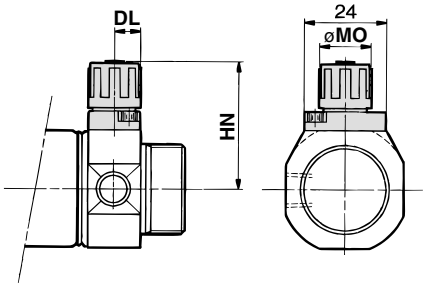

Manual release (Lock type): Suffix L

Double end lock: CBM2B Bore size – Stroke -WN

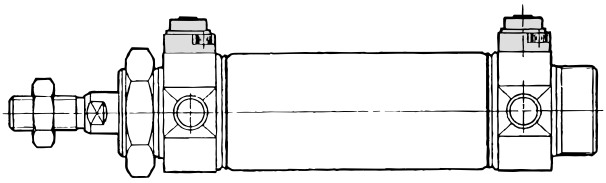

With rod boot

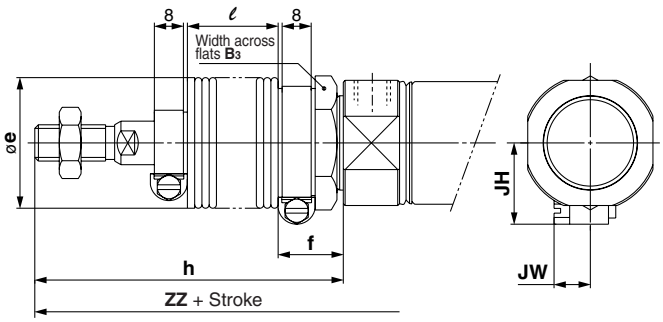

(mm)

Bore size (mm) \ Symbol	Stroke range	A	AL	B1	B2	D	DL	E	F	FL	G	H	H1	H2	HR	HN (Max.)	I	K	KA	MM	MO	N	NA	NN	P	S	ZZ
20	Up to 300	18	15.5	13	26	8	7.5	$20^{0}_{-0.033}$	13	10.5	8	41	5	8	22.3	34	28	5	6	M8 x 1.25	15	15	24	M20 x 1.5	1/8	62	116
25	Up to 300	22	19.5	17	32	10	7.5	$26^{0}_{-0.033}$	13	10.5	8	45	6	8	25.3	37	33.5	5.5	8	M10 x 1.25	15	15	30	M26 x 1.5	1/8	62	120
32	Up to 300	22	19.5	17	32	12	7.5	$26^{0}_{-0.033}$	13	10.5	8	45	6	8	27.6	39.3	37.5	5.5	10	M10 x 1.25	15	15	34.5	M26 x 1.5	1/8	64	122
40	Up to 300	24	21	22	41	14	10.7	$32^{0}_{-0.039}$	16	13.5	11	50	8	10	33.6	47.8	46.5	7	12	M14 x 1.5	19	21.5	42.5	M32 x 2	1/4	88	154

With Rod Boot

(mm)

Bore size (mm) \ Symbol	B3	e	f	h							ℓ						
				1 to 50	51 to 100	101 to 150	151 to 200	201 to 300	301 to 400	401 to 500	1 to 50	51 to 100	101 to 150	151 to 200	201 to 300	301 to 400	401 to 500
20	30	36	18	68	81	93	106	131	156	181	12.5	25	37.5	50	75	100	125
25	32	36	18	72	85	97	110	135	160	185	12.5	25	37.5	50	75	100	125
32	32	36	18	72	85	97	110	135	160	185	12.5	25	37.5	50	75	100	125
40	41	46	20	77	90	102	115	140	165	190	12.5	25	37.5	50	75	100	125

With Rod Boot

(mm)

Bore size (mm) \ Symbol	ZZ							JH	JW
	1 to 50	51 to 100	101 to 150	151 to 200	201 to 300	301 to 400	401 to 500		
20	143	156	168	181	206	231	256	23.5	10.5
25	147	160	172	185	210	235	260	23.5	10.5
32	149	162	174	187	212	237	262	23.5	10.5
40	181	194	206	219	244	269	294	27	10.5

* For details about the rod end nut and accessory, refer to pages 144 and 145.

With Mounting Bracket (For dimensions not indicated below, refer to page 209.)

Axial foot style: CBM2L Bore size – Stroke -H -R -W N L

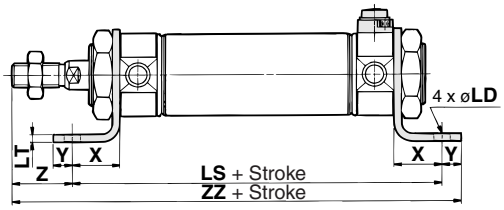

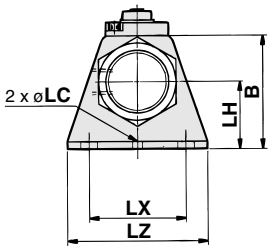

Rod side flange style: CBM2F Bore size – Stroke -H -R -W N L

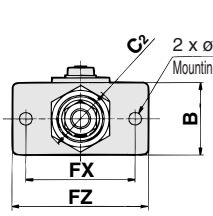

øB20 to ø32

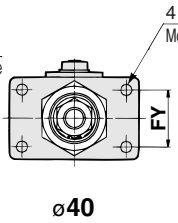

ø40

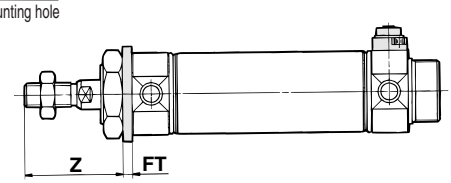

Head side flange style: CBM2G Bore size – Stroke -H -R -W N L

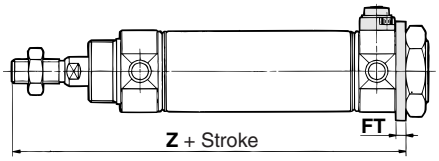

Single clevis style: CBM2C Bore size – Stroke -H -R -W N L

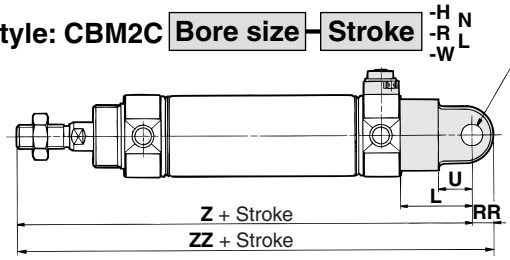

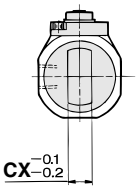

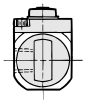

ø20

Double clevis style: CBM2D Bore size – Stroke -H -R -W N L

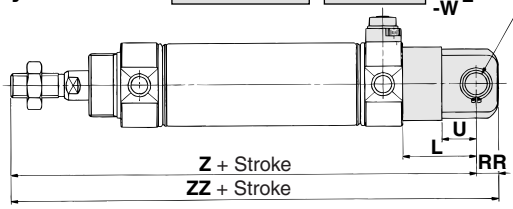

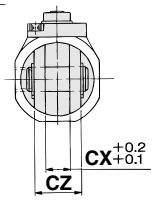

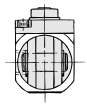

ø20

∗ Clevis pin and retaining ring (cotter pin for bore size ø40) are shipped together.

Rod side trunnion style: CBM2U Bore size – Stroke -H -R -W N L

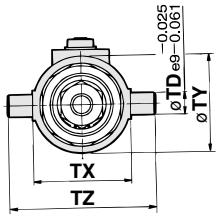

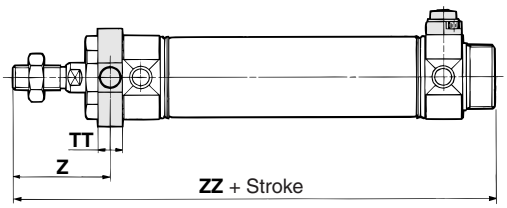

Head side trunnion style: CBM2T Bore size – Stroke -H -R -W N L

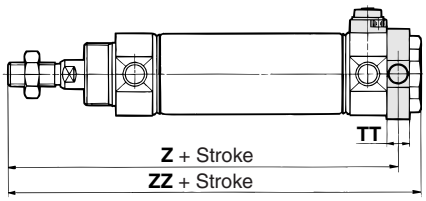

(mm)

Bore size (mm)	Axial foot style														Flange style										Clevis style									Trunnion style									
	Stroke range	B	LC	LD	LH	LS	LT	LX	LZ	X	Y	Z	ZZ	Stroke range		B	C_2	FD	FT	FX	FY	FZ	Z		Stroke range	CD	CX	CZ	L	RR	U	Z	ZZ	Stroke range	TD	TT	TX	TY	TZ	Z		ZZ	
														Rod side	Head side								Rod side	Head side																	Rod side	Head side	Rod side	Head side
20	to 400	40	4	6.8	25	102	3.2	40	55	20	8	21	131	Up to 400	Up to 300	34	30	7	4	60	—	75	37	107	Up to 300	9	10	19	30	9	14	133	142	Up to 300	8	10	32	32	52	36	108	116	118
25	to 450	47	4	6.8	28	102	3.2	40	55	20	8	25	135	Up to 450	Up to 300	40	37	7	4	60	—	75	41	111	Up to 300	9	10	19	30	9	14	137	146	Up to 300	9	10	40	40	60	40	112	120	122
32	to 450	47	4	6.8	28	104	3.2	40	55	20	8	25	137	Up to 450	Up to 300	40	37	7	4	60	—	75	41	113	Up to 300	9	10	19	30	9	14	139	148	Up to 300	9	10	40	40	60	40	114	122	124
40	to 500	54	4	7	30	134	3.2	55	75	23	10	27	171	Up to 500	Up to 300	52	47.3	7	5	66	36	82	45	143	Up to 300	10	15	30	39	11	18	177	188	Up to 300	10	11	53	53	77	44.5	143.5	154	154

∗ Dimensions other than mentioned above are the same as on page 209.

Precautions on Trunnion Style, Flange Style

1. Trunnion style
(1) With lock in rod side of the rod side trunnion style (2) With lock in head side of the head side trunnion style (3) With lock in both sides. For above cases, use caution since the trunnion pin and fittings may be interfered with each other because the trunnion pin and port are very closed to each other.

2. Flange style (ø20 to ø32)
(1) With lock in rod side of the rod side flange style (2) With lock in head side of the head side flange style (3) With lock in both sides. For above cases, use caution since the bolt for mounting a cylinder and fittings may be interfered with each other. Refer to “Special Port Position” in “Made to Order Specifications” on page 1416.

With Air Cushion (For dimensions not indicated below, refer to pages 209 and 210.)

Basic style
Head end lock: CBM2B Bore size – Stroke A-HN

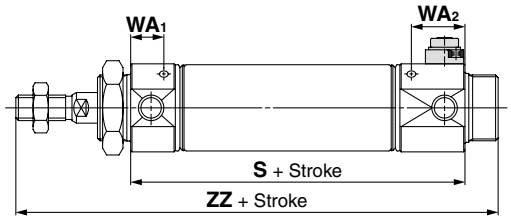

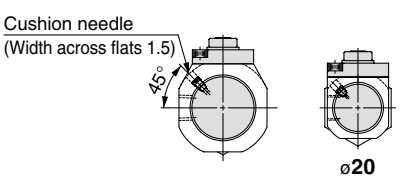

Manual release (Non-lock type): Suffix N

With Air Cushion

(mm)

Bore size (mm)	S			WA1			WA2			ZZ		
	Head end lock	Rod end lock	Double end lock	Head end lock	Rod end lock	Double end lock	Head end lock	Rod end lock	Double end lock	Head end lock	Rod end lock	Double end lock
20	72	73	83	13	24	24	23	13	23	126	127	137
25	72	73	83	13	24	24	23	13	23	130	131	141
32	72	75	83	13	24	24	21	13	21	130	133	141
40	93	96	101	16	24	24	21	16	21	159	162	167

Axial foot style: CBM2L Bore size – Stroke A-H/R/W N/L

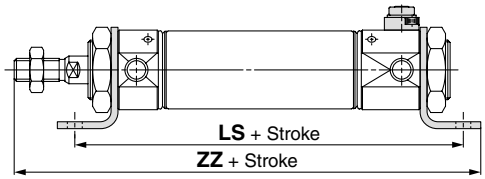

Rod side flange style: CBM2F Bore size – Stroke A-H/R/W N/L

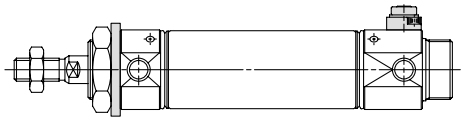

Head side flange style: CBM2G Bore size – Stroke A-H/R/W N/L

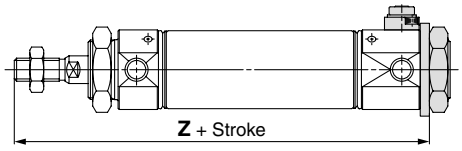

Single clevis style: CBM2C Bore size – Stroke A-H/R/W N/L

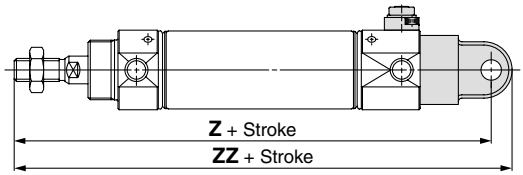

Double clevis style: CBM2D Bore size – Stroke A-H/R/W N/L

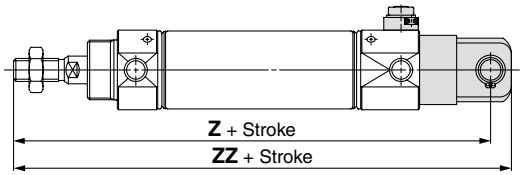

Rod side trunnion style: CBM2U Bore size – Stroke A-H/R/W N/L

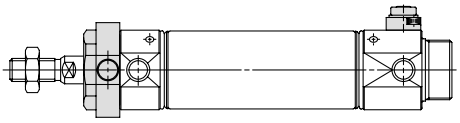

Head side trunnion style: CBM2T Bore size – Stroke A-H/W N/L

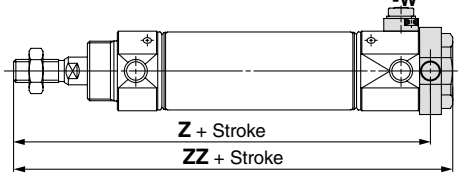

(mm)

Bore size (mm)	Axial foot style						Head side flange style		
	LS			ZZ			Z		
	Head end lock	Rod end lock	Double end lock	Head end lock	Rod end lock	Double end lock	Head end lock	Rod end lock	Double end lock
20	112	113	123	141	142	152	117	118	128
25	112	113	123	145	146	156	121	122	132
32	112	115	123	145	148	156	121	124	132
40	139	142	147	176	179	184	148	151	156

(mm)

Bore size (mm)	Clevis style						Head side trunnion style					
	Z			ZZ			Z			ZZ		
	Head end lock	Rod end lock	Double end lock	Head end lock	Rod end lock	Double end lock	Head end lock	Rod end lock	Double end lock	Head end lock	Rod end lock	Double end lock
20	143	144	154	152	153	163	118	119	129	128	129	139
25	147	148	158	156	157	167	122	123	133	132	133	143
32	147	150	158	156	159	167	122	125	133	132	135	143
40	182	185	190	193	196	201	148.5	151.5	156.5	159	162	167

Series CBM2
Specific Product Precautions 1

Be sure to read before handling. Refer to front matters 54 and 55 for Safety Instructions and pages 3 to 11 for Actuator and Auto Switch Precautions.

Use the Recommended Pneumatic Circuit

⚠ Caution

●This is necessary for proper operation and release of the lock.

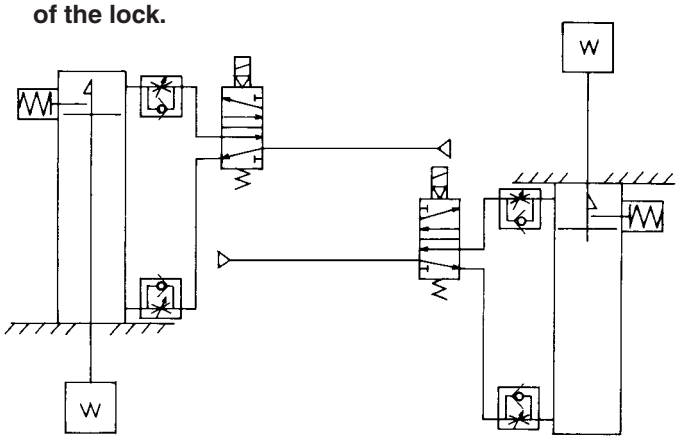

Head end lock　　Rod end lock

Operating Precautions

⚠ Caution

1. Do not use 3 position solenoid valves.
Avoid use in combination with 3 position solenoid valves (especially closed center metal seal types). If pressure is trapped in the port on the lock mechanism side, the cylinder cannot be locked. Furthermore, even after being locked, the lock may be released after some time, due to air leaking from the solenoid valve and entering the cylinder.

2. Back pressure is required to release end lock.
Be sure air is supplied to side of cylinder without the locking mechanism, as above, prior to supplying air pressure to the side with end lock or lock may not be released. (Refer to “Releasing the Lock”.)

3. Release the lock when mounting or adjusting the cylinder.
If mounting or other work is performed when the cylinder is locked, the lock unit may be damaged.

4. Operate with a load ratio of 50% or less.
If the load ratio exceeds 50%, this may cause problems such as failure of the lock to release, or damage to the lock unit.

5. Do not operate multiple cylinders in synchronization.
Avoid applications in which two or more end lock cylinders are synchronized to move one workpiece, as one of the cylinder locks may not be able to release when required.

6. Use a speed controller with meter-out control.
Lock cannot be released occasionally by meter-in control.

7. Be sure to operate completely to the cylinder stroke end on the side with the lock.
If the cylinder piston does not reach the end of the stroke, locking might not work or locking might not be released.

Operating Pressure

⚠ Caution

1. Use pressures over 0.15 MPa at port with locking mechanism.

Exhaust Speed

⚠ Caution

1. Locking will occur automatically if the pressure applied to the port on the lock mechanism side falls to 0.05 MPa or less. In cases where the piping on the lock mechanism side is long and thin, or the speed controller is separated at some distance from the cylinder port, the exhaust speed will be reduced. Take note that some time may be required for the lock to engage. In addition, clogging of a silencer mounted on the solenoid valve exhaust port can produce the same effect.

Relation to Cushion

⚠ Caution

1. When cushion valve at side with locking mechanism is fully opened or closed, piston rod may reached at stroke end. Thus lock is not established. And when locking is done at cushion valve fully closed, adjust cushion valve since lock may not be released.

Releasing the Lock

⚠ Warning

1. Before releasing the lock, be sure to supply air to the side without the lock mechanism, so that there is no load applied to the lock mechanism when it is released. (Refer to the recommended pneumatic circuits.) If the lock is released when the port on the other side is in an exhaust state, and with a load applied to the lock unit, the lock unit may be subjected to an excessive force and be damaged. Furthermore, sudden movement of the piston rod is very dangerous.

Series CBM2
Specific Product Precautions 2

Be sure to read before handling. Refer to front matters 54 and 55 for Safety Instructions and pages 3 to 11 for Actuator and Auto Switch Precautions.

Manual Release

⚠ Caution

1. Manual release (Non-lock type)

Insert the accessory bolt from the top of the rubber cap (it is not necessary to remove the rubber cap), and after screwing it into the lock piston, pull it to release the lock. If you stop pulling the bolt, the lock will return to an operational state.

Thread sizes, pulling forces and strokes are as shown below.

Bore size (mm)	Thread size	Pulling force	Stroke (mm)
20, 25, 32	M2.5 x 0.45 x 25ℓ or more	4.9 N	2
40	M3 x 0.5 x 30ℓ or more	10 N	3

Remove the bolt for normal operation.

It can cause lock malfunction or faulty release.

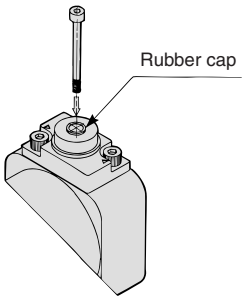

2. Manual release (Lock type)

While pushing the M/O knob, turn it 90° counterclockwise. The lock is released (and remains in a released state) by aligning the ▲ mark on the cap with the ▼ OFF mark on the M/O knob.

When locking is desired, turn M/O button clockwise 90° while pushing fully, correspond ▲ on cap and ▼ ON mark on M/O button. The correct position is confirmed by a click sound "click".

If not confirmed, locking is not done.

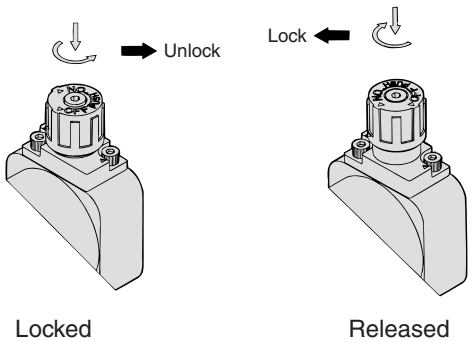

Working Principle

The figures below are for Series CBA2.

●Head end lock (Rod end lock is the same, too.)

1. When the piston rod is getting closer to the stroke end, the taper part (∗) of the piston rod edge will push the lock piston up.

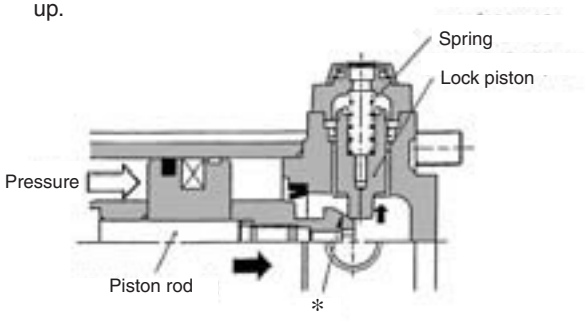

2. Lock piston is pushed up further.

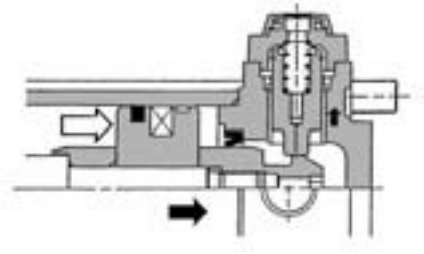

3. Lock piston is pushed up into the groove of piston rod to lock it. (Lock piston is pushed up by spring force.) At this time, it is exhausted from port in head side and introduced to atmosphere.

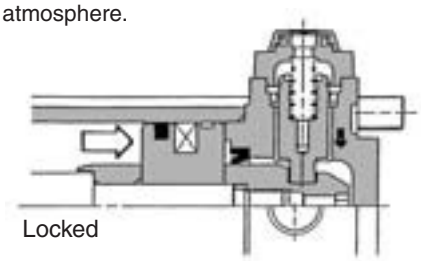

4. When pressure is supplied in the head side, lock piston will be pushed up to release the lock.

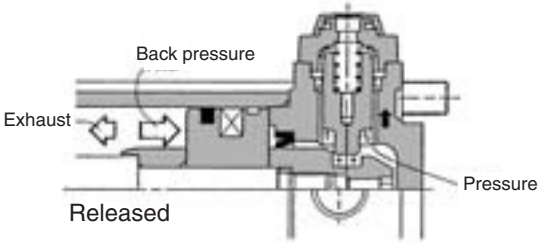

5. Lock will be released, then cylinder will move forward.

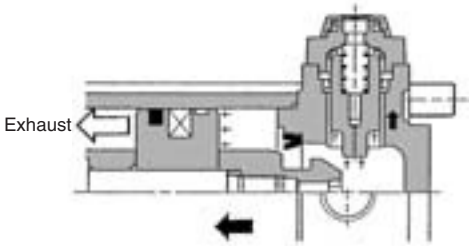

Proper Auto Switch Mounting Position (Detection at stroke end) and Its Mounting Height

Reed auto switch

D-A9□

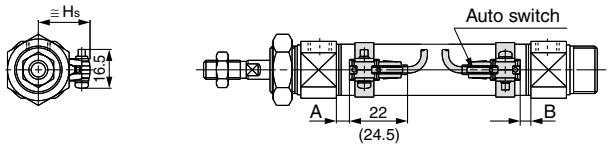

( ): Dimensions of D-A93 type

D-C7/C8

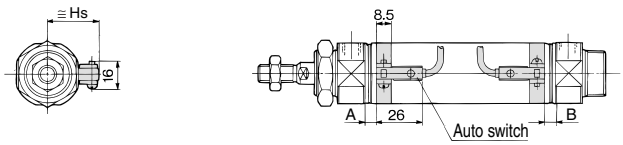

D-B5/B6/B59W

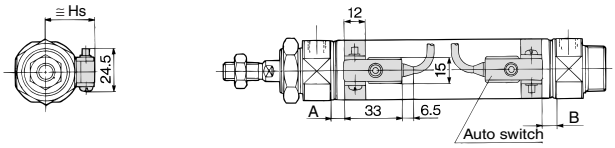

D-A33A/A34A

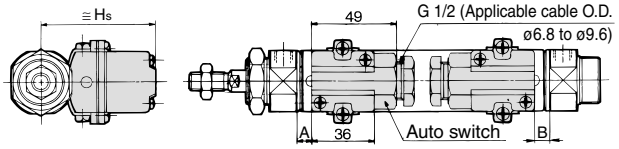

D-A44A

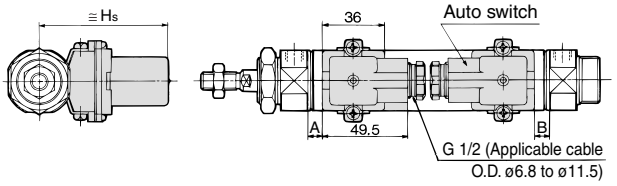

D-C73C/C80C

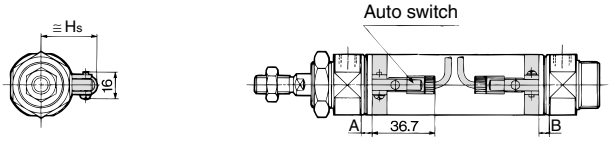

Solid state auto switch

D-M9□
D-M9□W

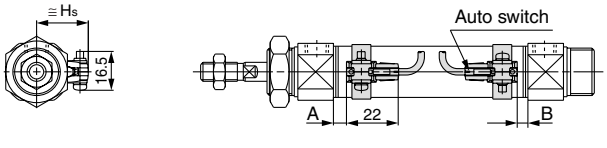

D-H7□/H7□W/H7NF/H7BAL

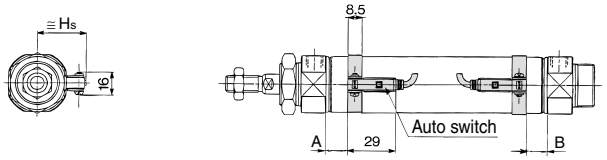

D-G5NTL

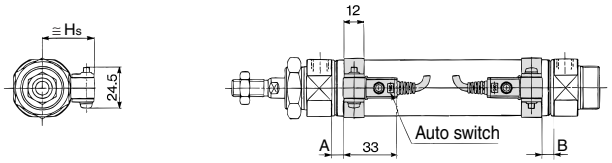

D-G39A/K39A

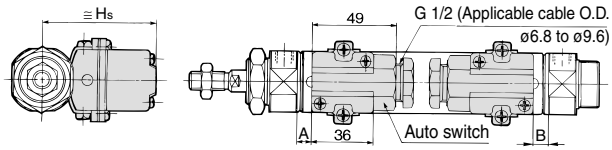

D-H7C

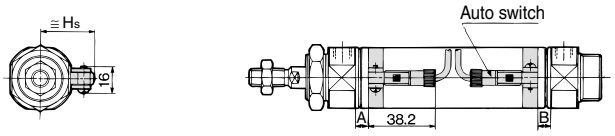

Proper Auto Switch Mounting Position (Detection at stroke end) and Its Mounting Height

Proper Auto Switch Mounting Position (Excluding Single Acting Type)

(mm)

Auto switch model / Bore size	D-A9□		D-M9□ D-M9□W		D-B5□ D-B64		D-C7□ D-C80 D-C73C D-C80C		D-B59W		D-A3□A D-G39A D-K39A D-A44A		D-H7□ D-H7C D-H7□W D-H7BAL D-H7NF		D-G5NTL	
	A	B	A	B	A	B	A	B	A	B	A	B	A	B	A	B
20	6.5 (4)	5.5 (3)	10.5 (8)	9.5 (7)	1 (—)	0 (—)	7 (5)	6 (4)	4 (2)	3 (1)	0.5 (—)	0 (—)	6 (4)	5 (3)	2.5 (0.5)	1.5 (0)
25	6.5 (4)	5.5 (3)	10.5 (8)	9.5 (7)	1 (—)	0 (—)	7 (5)	6 (4)	4 (2)	3 (1)	0.5 (—)	0 (—)	6 (4)	5 (3)	2.5 (0.5)	1.5 (0)
32	7.5 (5)	6.5 (4)	11.5 (9)	10.5 (8)	2 (0)	1 (0)	8 (6)	7 (5)	5 (3)	4 (2)	1.5 (0)	0.5 (0)	7 (5)	6 (4)	3.5 (1.5)	2.5 (0.5)
40	13.5	11.5	17.5	15.5	7	6	13	12	10	9	6.5	5.5	12	11	8.5	7.5

∗ ( ): Setting position for the auto switch with an air cushion.
D-B5/B6/A3□A/A44A/G39A/K39A cannot be mounted on the bore size ø20 and ø25 cylinder with an air cushion.
Note) Adjust the auto switch after confirming the operating condition in the actual setting.

Auto Switch Mounting Height

(mm)

Auto switch model / Bore size	D-A9□ D-M9□ D-M9□W	D-B5□ D-B64 D-B59W D-G5NTL D-H7C	D-C7□ D-C80 D-H7□ D-H7□W D-H7BAL D-H7NF	D-C73C D-C80C	D-A3□A D-G39A D-K39A	D-A44A
	Hs	Hs	Hs	Hs	Hs	Hs
20	22	25.5	22.5	25	60	69.5
25	24.5	28	25	27.5	62.5	72
32	28	31.5	28.5	31	66	75.5
40	32	35.5	32.5	35	70	79.5

Proper Auto Switch Mounting Position (Detection at stroke end) and Mounting Height: Single Acting/Spring Return Type (S), Spring Extend Type (T)

Proper Auto Switch Mounting Position: Standard Type/Spring Return Type (S), Non-rotating Rod Type/Spring Return Type (S)

(mm)

Auto switch model	Bore size	A Dimensions					B
		Up to 15st	51 to 100st	101 to 150st	151 to 200st	201 to 250st	
D-A9□	20	31.5	56.5	81.5	—	—	5.5
	25	31.5	56.5	81.5	—	—	5.5
	32	32.5	57.5	82.5	107.5	—	6.5
	40	38.5	63.5	88.5	113.5	138.5	11.5
D-M9□ D-M9□W	20	35.5	60.5	85.5	—	—	9.5
	25	35.5	60.5	85.5	—	—	9.5
	32	36.5	61.5	86.5	111.5	—	10.5
	40	42.5	67.5	92.5	117.5	142.5	15.5
D-B5□ D-B64	20	26	51	76	—	—	0
	25	26	51	76	—	—	0
	32	27	52	77	102	—	1
	40	32	57	82	107	132	6
D-C7□ D-C80 D-C73C D-C80C	20	32	57	82	—	—	6
	25	32	57	82	—	—	6
	32	33	58	83	108	—	7
	40	38	63	88	113	138	12
D-B59W	20	29	54	79	—	—	3
	25	29	54	79	—	—	3
	32	30	55	80	105	—	4
	40	35	60	85	110	135	9
D-A3□A D-G39A D-K39A D-A44A	20	25.5	50.5	75.5	—	—	0
	25	25.5	50.5	75.5	—	—	0
	32	26.5	51.5	76.5	101.5	—	0.5
	40	31.5	56.5	81.5	106.5	131.5	5.5
D-H7□ D-H7C D-H7□W D-H7BAL D-H7NF	20	31	56	81	—	—	5
	25	31	56	81	—	—	5
	32	32	57	82	107	—	6
	40	37	62	87	112	137	11
D-G5NTL	20	27.5	52.5	77.5	—	—	1.5
	25	27.5	52.5	77.5	—	—	1.5
	32	28.5	53.5	78.5	103.5	—	2.5
	40	33.5	58.5	83.5	108.5	133.5	7.5

Note) Adjust the auto switch after confirming the operating condition in the actual setting.

Proper Auto Switch Mounting Position: Standard Type/Spring Extend Type (T), Non-rotating Rod Type/Spring Extend Type (T)

(mm)

Auto switch model	Bore size	A	B Dimensions				
			Up to 15st	51 to 100st	101 to 150st	151 to 200st	201 to 250st
D-A9□	20	6.5	30.5	55.5	80.5	—	—
	25	6.5	30.5	55.5	80.5	—	—
	32	7.5	31.5	56.5	81.5	106.5	—
	40	13.5	36.5	61.5	86.5	111.5	136.5
D-M9□ D-M9□W	20	10.5	34.5	59.5	84.5	—	—
	25	10.5	34.5	59.5	84.5	—	—
	32	11.5	35.5	60.5	85.5	110.5	—
	40	17.5	40.5	65.5	90.5	115.5	140.5
D-B5□ D-B64	20	1	25	50	75	—	—
	25	1	25	50	75	—	—
	32	2	26	51	76	101	—
	40	7	31	56	81	106	131
D-C7□ D-C80 D-C73C D-C80C	20	7	31	56	81	—	—
	25	7	31	56	81	—	—
	32	8	32	57	82	107	—
	40	13	37	62	87	112	137
D-B59W	20	4	28	53	78	—	—
	25	4	28	53	78	—	—
	32	5	29	54	79	104	—
	40	10	34	59	84	109	134
D-A3□A D-G39A D-K39A D-A44A	20	0.5	24.5	49.5	74.5	—	—
	25	0.5	24.5	49.5	74.5	—	—
	32	1.5	25.5	50.5	75.5	100.5	—
	40	6.5	30.5	55.5	80.5	105.5	130.5
D-H7□ D-H7C D-H7□W D-H7BAL D-H7NF	20	6	30	55	80	—	—
	25	6	30	55	80	—	—
	32	7	31	56	81	106	—
	40	12	36	61	86	111	136
D-G5NTL	20	2.5	26.5	51.5	76.5	—	—
	25	2.5	26.5	51.5	76.5	—	—
	32	3.5	27.5	52.5	77.5	102.5	—
	40	8.5	32.5	57.5	81.5	107.5	132.5

Note) Adjust the auto switch after confirming the operating condition in the actual setting.

Minimum Auto Switch Mounting Stroke

n: No. of auto switch (mm)

Auto switch model	No. of auto switch mounted				
	1	2		n	
		Different surfaces	Same surface	Different surfaces	Same surface
D-A9□ D-M9□ D-M9□W	10	15 (1)	45 (1)	$15 + 45\frac{(n-2)}{2}$ (n=2, 4, 6···)	45 + 45(n – 2)
D-C7□ D-C80	10	15	50	$15 + 45\frac{(n-2)}{2}$ (n=2, 4, 6···)	50 + 45(n – 2)
D-H7□ D-H7□W D-H7BAL D-H7NF	10	15	60	$15 + 45\frac{(n-2)}{2}$ (n=2, 4, 6···)	60 + 45(n – 2)
D-C73C D-C80C D-H7C	10	15	65	$15 + 50\frac{(n-2)}{2}$ (n=2, 4, 6···)	65 + 50(n – 2)
D-B5□/B64 D-G5NTL	10	15	75	$15 + 50\frac{(n-2)}{2}$ (n=2, 4, 6···)	75 + 55(n – 2)
D-B59W	15	20	75	$20 + 50\frac{(n-2)}{2}$ (n=2, 4, 6···)	75 + 55(n – 2)
D-A3□A(2) D-G39A D-K39A D-A44A	10	35	100	35 + 30(n – 2)	100 + 100(n – 2)

Note 1) Auto switch mounting (The adjustment as shown in the figures below is required with the following stroke ranges.)

Auto switch model	With 2 auto switches	
	Different surfaces (1)	Same surface (1)
	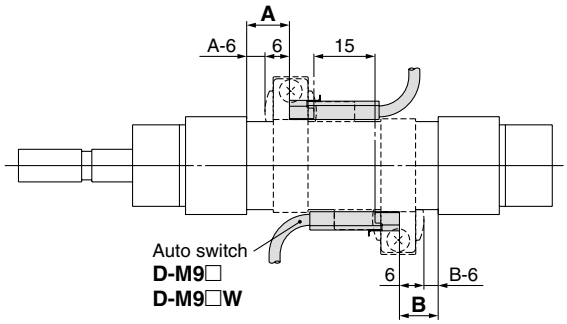 The proper auto switch mounting position is 6 mm inward from the switch holder edge.	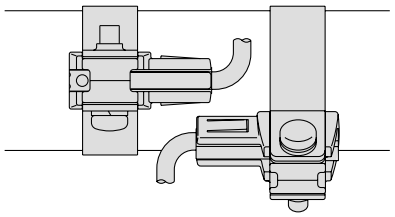 The auto switch is mounted by slightly displacing it in a direction (cylinder tube circumferential exterior) so that the auto switch and lead wire do not interfere with each other.
D-A93	—	45 to less than 50 stroke
D-M9□ D-M9□W	15 to less than 20 stroke	45 to less than 55 stroke

Note 2) D-A3□A/A44A/G39A/K39A cannot be mounted on the centralized piping type Series CDM2□P.

Operating Range

(mm)

Auto switch model	Bore size			
	20	**25**	**32**	**40**
D-A9□	6	6	6	6
D-M9□ D-M9□W	3	3	4	3.5
D-C7□/C80 D-C73C/C80C	7	8	8	8
D-B5□/B64 D-A3□A/A44A Note)	8	8	9	9
D-B59W	12	12	13	13
D-H7□/H7□W/H7BAL D-G5NTL/H7NF	4	4	4.5	5
D-H7C	7	8.5	9	10
D-G39A/K39A Note)	8	9	9	9

* Since this is a guideline including hysteresis, not meant to be guaranteed. (Assuming approximately ±30% dispersion.) There may be the case it will vary substantially depending on an ambient environment.

Note) D-A3□A/A44A/G39A/K39A cannot be mounted on the centralized piping type Series CDM2□P.

Auto Switch Mounting Bracket: Part No.

Auto switch model	Bore size (mm)			
	ø20	ø25	ø32	ø40
D-A9□ **D-M9□** **D-M9□W**	Note 1) ①BM2-020 ②BJ3-1	Note 1) ①BM2-025 ②BJ3-1	Note 1) ①BM2-032 ②BJ3-1	Note 1) ①BM2-040 ②BJ3-1
D-C7□/C80 **D-C73C/C80C** **D-H7□** **D-H7□W** **D-H7BAL** **D-H7NF**	BM2-020	BM2-025	BM2-032	BM2-040
D-B5□/B64 **D-B59W** **D-G5NTL** **D-G5NBL**	BA2-020	BA2-025	BA2-032	BA2-040
D-A3□A/A44A Note 2) **D-G39A/K39A**	BM3-020	BM3-025	BM3-032	BM3-040

Note 1) Two kinds of auto switch brackets are used as a set.
Note 2) D-A3□A/A44A/G39A/K39A cannot be mounted on the centralized piping type Series CDM2□P.

[Mounting screw set made of stainless steel]
The following set of mounting screws made of stainless steel (including nuts) is available. Use it in accordance with the operating environment. (Please order the auto switch mounting bracket separately, since it is not included.)
BBA4: For D-C7/C8/H7 types
Note 3) Refer to page 1358 for the details of BBA4 screws.
The above stainless steel screws are used when a cylinder is shipped with D-H7BAL type auto switches. When only an auto switch is shipped independently, BBA4 screws are attached.

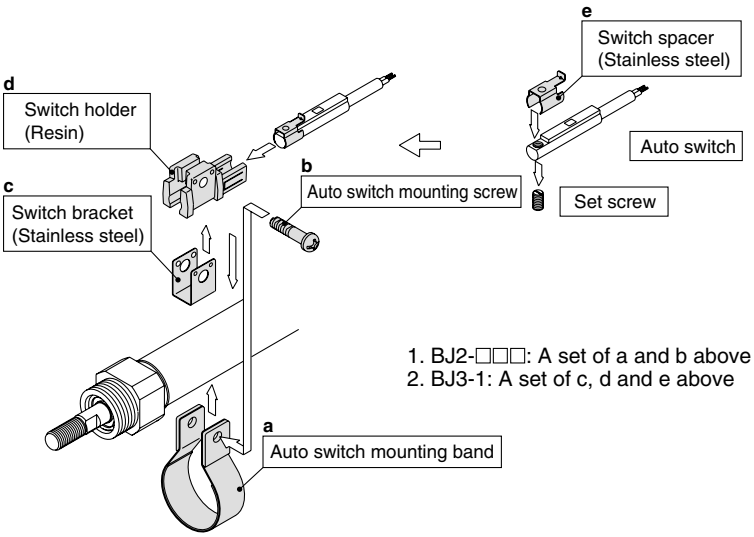

Besides the models listed in How to Order, the following auto switches are applicable.
Refer to pages 1263 to 1371 for the detailed specifications.

Auto switch type	Part no.	Electrical entry (Entry direction)	Features
Reed	D-B53, C73, C76	Grommet (In-line)	—
	D-C80		Without indicator light
Sold state	D-H7A1, H7A2, H7B		—
	D-H7NW, H7PW, H7BW		Diagnosis indication (2-color indication)
	D-G5NTL		With timer

∗ For solid state switches, auto switches with a pre-wired connector are also available. Refer to pages 1328 and 1329 for details.
∗ Normally closed (NC = b contact) solid state auto switches (D-F9G/F9H types) are also available. Refer to page 1290 for details.
∗ A wide range detection type, solid state auto switch (D-GNBL type) is also available. Refer to page 1320 for details.

Fine Lock Cylinders/Lock-up Cylinder

Series CL

ø16, ø20, ø25, ø32, ø40, ø50, ø63, ø80, ø100, ø125, ø140, ø160

Locking method	Spring locking	Pneumatic locking	Spring and pneumatic locking
Features	• Unlocking Discharging the air causes the lock to operate.	• Pressure locking The holding power can be varied according to the air pressure that is applied to the port.	• Pressure locking The holding power can be varied according to the air pressure that is applied to the port. • Unlocking Discharging the air causes the lock to operate.

(Lock-up cylinders are spring locking only.)

Locking in both directions is possible.
Locking in either side of cylinder stroke is possible, too.
(The lock-up cylinder can be locked only in one direction.)

Series Variations

Series	Action	Rod	Standard variations: Auto switch built-in magnet	Standard variations: With rod boot	Locking direction	Locking method: Spring locking	Locking method: Pneumatic locking	Locking method: Spring and Pneumatic locking	Bore size (mm)	Standard stroke (mm)	Page
Fine lock cylinders											
Series CLJ2 	Double acting	Single rod	●	●	Both directions	●	●	●	16	15 to 200	601
Series CLM2 	Double acting	Single rod	●	●	Both directions	●	●	●	20 25 32 40	25 to 300	611
Series CLG1 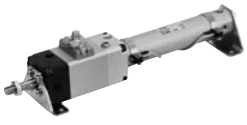	Double acting	Single rod	●	●	Both directions	●	●	●	20	25 to 200	625
									25 32 40	25 to 300	
Lock-up cylinder											
Series CL1 	Double acting	Single rod	●	●	One direction	●	●	●	40	25 to 500	636
									50, 63	25 to 600	
									80, 100	25 to 700	
									125, 140	Up to 1000	
									160	Up to 1200	

Series CL
Specific Product Precautions 1

Be sure to read before handling.
The precautions on these pages are for the fine lock cylinders and the lock-up cylinders.
For general actuator precautions, refer to Actuator Precautions on pages 3 to 7.

Design of Equipment and Machinery

⚠ Warning

1. Construct so that the human body will not come into direct contact with driven objects or the moving parts of locking cylinders.
   If there is a risk of contact, provide safety measures such as a cover or a system that uses sensors that will activate an emergency stop before contact is made.
2. Use a balance circuit in which lurching of the piston is taken into consideration. If the lock is applied at a desired position of a stroke and compressed air is applied to only one side of the cylinder, the piston will lurch at a high speed the moment the lock is disengaged. In such a situation, there is a risk of injury to humans, or equipment damage. To prevent the piston from lurching, use a balance circuit such as the recommended pneumatic circuit (P. 598). If an air-hydro fine lock cylinder is used, make sure to operate the lock portion through air pressure. Never use oil on the lock-up cylinder because the lock-up cylinder is a non-lube style. Failure to observe this could cause the lock to malfunction.

Selection

⚠ Warning

Refer to the following criteria for the maximum load in the locked state, and set.

When a cylinder is in a no-load and locked state, the holding force (maximum static load) is the lock's ability to hold a static load that does not involve vibrations or shocks. To ensure braking force, the maximum load must be set as described below.

1. For constant static loads, such as for drop prevention:
   - Fine lock series (Series CLJ2/CLM2/CLG1)
     35% or less of the holding force (maximum static load)
     Note) For applications such as drop prevention, consider situations in which the air source is shut off, and make selections based on the holding force of the spring locked state. Do not use the pneumatic lock for drop prevention purposes.
   - Lock-up series (Series CL1)
     50% or less of the holding force (maximum static load)
2. When kinetic energy acts upon the cylinder, such as when effecting an intermediate stop, there are constraints in terms of the allowable kinetic energy that can be applied to the cylinder in a locked state. Therefore, refer to the allowable kinetic energy of the respective series. Furthermore, during locking, the mechanism must sustain the thrust of the cylinder itself, in addition to absorbing the kinetic energy. Therefore, even within a given allowable kinetic energy level, there is an upper limit to the amount of the load that can be sustained.
   - Fine lock series (Series CLJ2/CLM2/CLG1)
     Maximum load at horizontal mounting: 70% or less of the holding force (Maximum static load) for spring lock
     Maximum load at vertical mounting: 35% or less of the holding force (Maximum static load) for spring lock
   - Lock-up series (Series CL1)
     Maximum load at horizontal mounting: 50% or less of the holding force (Maximum static load)
     Maximum load at vertical mounting: 25% or less of the holding force (Maximum static load)
3. In a locked state, do not apply impacts, strong vibrations or rotational forces.
   Do not apply a impacts, strong vibrations or rotational forces from external sources, because this could damage or shorten the life of the lock unit.
4. The locking of the fine lock cylinder is directional.
   Although the fine lock cylinder can be locked in both directions, be aware that its holding force is smaller in one of the directions.
   CLJ2/CLM2/CLG1···· Holding force at piston rod extended side decreases approx. 15%.
5. The locking of the lock-up cylinder is unidirectional.
   Because the locking direction of the lock-up cylinder is unidirectional, select the locking direction in accordance with the particular operating conditions. It is also possible to manufacture a bidirectional lock-up cylinder. For details, refer to "Made to Order" on page 1989. Due to the nature of its construction, a lock-up cylinder has a play of approximately 0.5 mm to 1 mm in the axial direction. Therefore, if an external stopper is used to stop the piston rod and the lock is engaged, the piston rod will shift in the amount of its axial play.
6. To effect an intermediate stop, take the cylinder's stopping precision and overrun amount into consideration.
   Because the lock is applied by mechanical means, the piston will not stop immediately in response to a stopping signal, but only after a time lag. This lag determines the amount of the overrun of the piston stroke. Thus, the range of the maximum and minimum amounts of the overrun is the stopping precision.
   - Place the limit switch before the desired stopping position, only in the amount of the overrun.
   - The limit switch must have a detection length (dog length) of the overrun amount + α.
   - For SMC's auto switches, the operating range are between 8 and 14 mm. (It varies depending on a switch model.) When the overrun amount exceeds this range, self-holding of the contact should be performed at the switch load side.

   * For stopping accuracy, refer to Series CLJ (P. 603), Series CLM2 (P. 614), Series CLG1 (P. 627), and Series CL1 (P. 637) respectively.

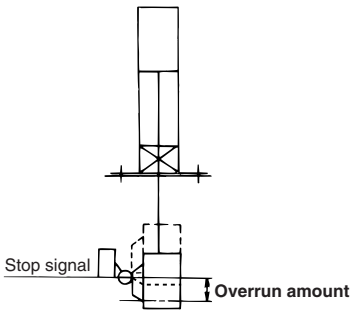

7. In order to further improve stopping accuracy, the time from the stop signal to the operation of the lock should be shortened as much as possible.
   To accomplish this, use a device such as a highly responsive electric control circuit or solenoid valve driven by direct current, and place the solenoid valve as close as possible to the cylinder.
8. Be aware that the stopping accuracy is influenced by changes in the piston speed.
   The variance in the stopping position increases if the piston speed changes, such as due to load fluctuations during the reciprocal movement of the piston. Therefore, take measures to ensure a constant piston speed immediately preceding the stopping position. Furthermore, the variances in the stopping position increases when the piston is effecting a cushioning stroke or during acceleration after starting its movement.
9. When unlocking is performed, if the thrust is applied to the piston, unlocking will not be easily done. To avoid that, ensure that unlocking should be performed before the thrust is applied to the piston.

Specific Product Precautions 2

Be sure to read before handling.
The precautions on these pages are for the fine lock cylinders and the lock-up cylinders.
For general actuator precautions, refer to Actuator Precautions on pages 3 to 7.

Mounting

⚠Warning

1. Be certain to connect the rod end to the load with the lock released.
- If this is performed with the lock engaged, a load that exceeds the allowable rotational force or holding force would be applied to the piston rod, which could damage the locking mechanism. The fine lock and Series CL1 with ø40 to ø100 cylinders have a built-in manual unlocking mechanism. Therefore, they can be maintained in the unlocked state without supplying air. For Series CL1 with ø125 to ø160 cylinders, simply connect piping to the lock-up port, and supply air pressure of 0.2 MPa or more to disengage the lock in order to attach a load.

⚠Caution

1. Do not apply offset loads on the piston rod.
- Pay particular attention to aligning the center of gravity of the load with the axial center of the cylinder. If there is a large amount of deviation, the piston rod could become unevenly worn or damaged due to the inertial moment that is created when the piston rod is stopped by the lock.

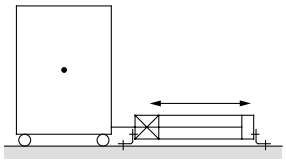

X Load center of gravity and cylinder shaft center are not matched.

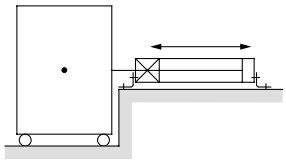

○ Load center of gravity and cylinder shaft center are matched.

Note) Can be used if all of the generated moment is absorbed by an effective guide.

Adjustment

⚠Caution

1. Place it in the locked position. (Excluding the series CL1 ø125 to ø160.)
- The locks are manually disengaged at the time the cylinders are shipped from the factory. Therefore, make sure to change them to the locked state before using the cylinders. For procedures to effect the change, refer to page 599 for the fine lock series. Be aware that the lock will not operate properly if the change is not performed correctly.
- Adjust the cylinder's air balance. In the state in which a load is attached to the cylinder, disengage the lock and adjust the air pressure at the rod side and the head side of the cylinder to obtain a load balance. By maintaining a proper air balance, the piston rod can be prevented from lurching when the lock is disengaged.

2. Adjust the mounting position of detections such as those of the auto switches. To effect an intermediate stop, adjust the mounting position of the auto switch detection by taking the amount of overrun into consideration in relation to the desired stopping position.

Series CL
Specific Product Precautions 3

Be sure to read before handling.
The precautions on these pages are for the fine lock cylinders and the lock-up cylinders.
For general actuator precautions, refer to Actuator Precautions on pages 3 to 7.

Pneumatic Circuit

⚠ Warning

1. Be certain to use an pneumatic circuit which will apply balancing pressure to both sides of the piston when in a locked stop.
In order to prevent cylinder lurching after a lock stop, when restarting or when manually unlocking, a circuit should be used to which will apply balancing pressure to both sides of the piston, thereby canceling the force generated by the load in the direction of piston movement.

2. Use a solenoid valve for unlocking which has a large effective area, as a rule 50% or more of the effective area of the cylinder drive solenoid valve.
The larger the effective area is, the shorter the locking time will be (the overrun amount will be shorter), and stopping accuracy will be improved.

3. Place the solenoid valve for unlocking close to the cylinder, and no farther than the cylinder drive solenoid valve.
The shorter the distance from the cylinder (the shorter the piping), the shorter the overrun amount will be, and stopping accuracy will be improved.

4. Allow at least 0.5 seconds from a locked stop (intermediate stop of the cylinder) until release of the lock.
When the locked stop time is too short, the piston rod (and load) may lurch at a speed greater than the control speed of the speed controller.

5. When restarting, control the switching signal for the unlocking solenoid valve so that it acts before or at the same time as the cylinder drive solenoid valve.
If the signal is delayed, the piston rod (and load) may lurch at a speed greater than the control speed of the speed controller.

6. Basic circuit

1) [Horizontal]

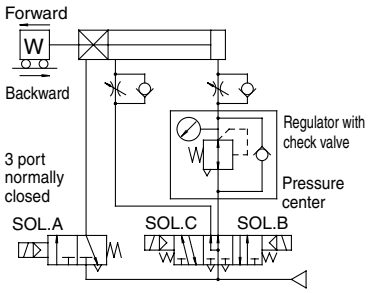

SOL.A	SOL.B	SOL.C	Action	
ON	ON	OFF	Forward	
OFF	OFF	OFF	Locked stop	0.5 s or more
ON	OFF	OFF	Unlocked	
ON	ON	OFF	Forward	0 to 0.5 s
ON	OFF	ON	Backward	
OFF	OFF	OFF	Locked stop	0.5 s or more
ON	OFF	OFF	Unlocked	
ON	OFF	ON	Backward	0 to 0.5 s

2) [Vertical]

[Load in the direction of rod extension]

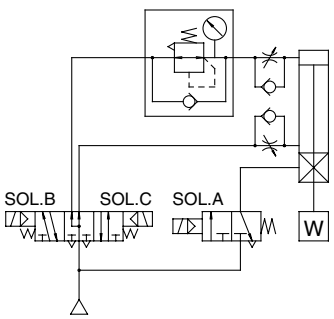

[Load in the direction of rod retraction]

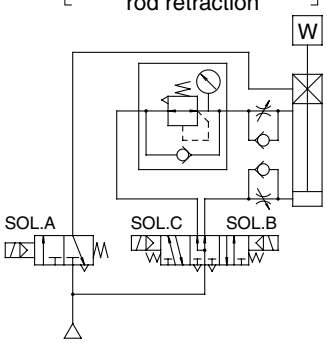

⚠ Caution

1. A 3 position pressure center solenoid valve and regulator with check valve can be replaced with two 3 port normally open valves and a regulator with relief function.

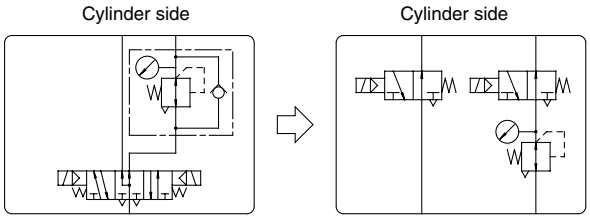

[Example]

1) [Horizontal]

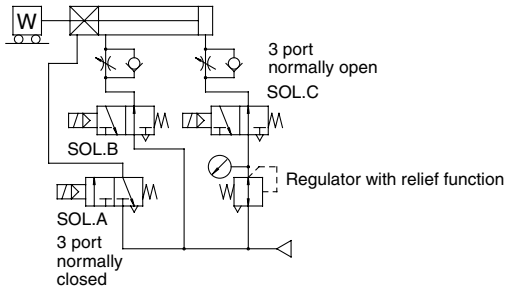

2) [Vertical]

[Load in the direction of rod extension]

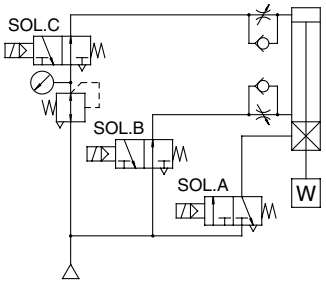

[Load in the direction of rod retraction]

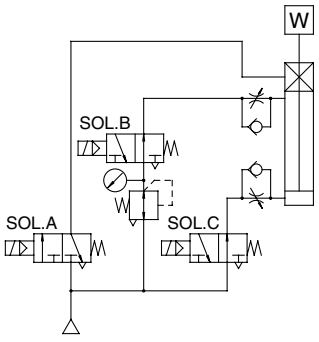

Series CL
Specific Product Precautions 4

Be sure to read before handling.
The precautions on these pages are for the fine lock cylinders and the lock-up cylinders.
For general actuator precautions, refer to Actuator Precautions on pages 3 to 7.

How to Manually Disengage the Lock and Change from the Unlocked to the Locked State

The lock is manually disengaged at the time the cylinder is shipped from the factory. Because the lock will not operate in this state, make sure to change it to the locked state before operation, after having adjusted the axial center for installation.

How to Change from Unlocked to Locked State

1. Series CLJ2, CLM2, CLG1

1) Loose locking nut.
2) Turn the wrench flats section of the manual unlocking cam to the LOCK position that is marked on the cam guide.
3) While keeping the wrench flats section in place, tighten the lock nut.

Note) The manual unlocking cam will rotate approximately 180°. Do not rotate the wrench flats section excessively.

Locked state **Manually unlocked state**

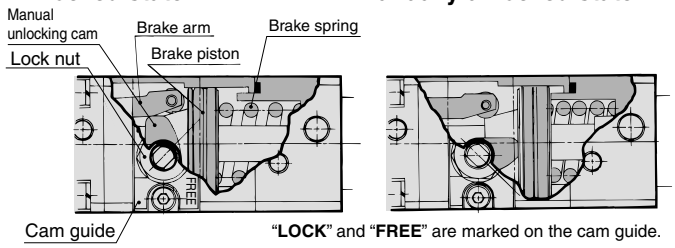

"**LOCK**" and "**FREE**" are marked on the cam guide.

Manually Unlocking

The lock of a fine lock series cylinder can be disengaged manually through the procedure described below. However, make sure to disengage the lock pneumatically before operating the cylinder.

Note) Manual disengagement of the lock could create a greater cylinder sliding resistance than pneumatic disengagement of the lock.

1. Series CLJ2, CLM2, CLG1

1) Loose locking nut.
2) Supply air pressure of 0.3 MPa or more to the lock release port.
3) Turn the wrench flats section of the manual unlocking cam until it stops at the FREE position that is marked on the cam guide.
4) While keeping the wrench flats section in place, tighten the lock nut.

Prior to Use

Construction Principle/Applicable Series: CLJ2, CLM2, CLG1, MLGC

Spring locking type

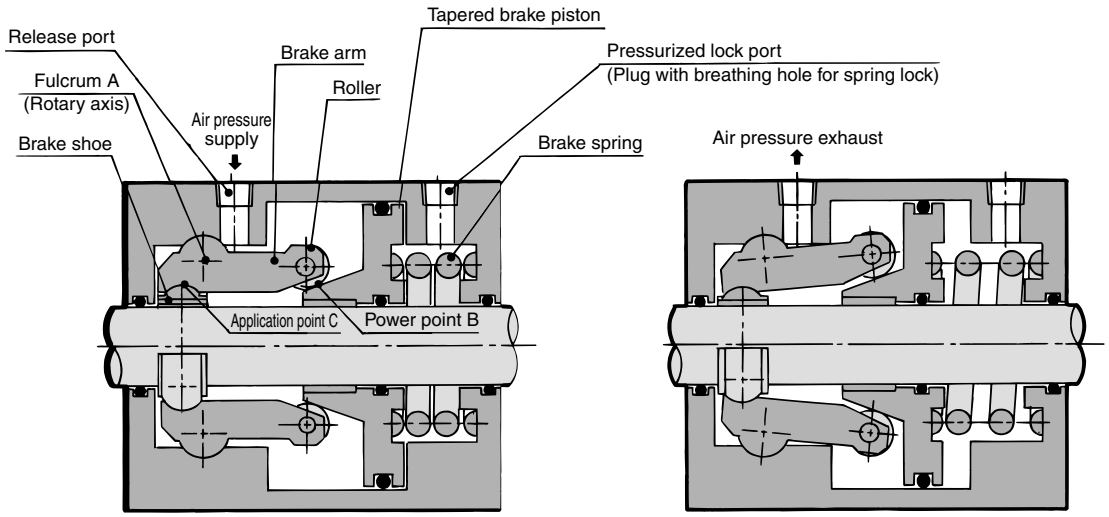

Spring locking (Exhaust locking)
The spring force that is applied to the tapered brake piston becomes amplified through the wedge effect. This force becomes further amplified to the power of AB/AC through the mechanical advantage of a lever and acts on the brake shoe, which in turn, applies a large force to tighten and lock the piston rod. To disengage the lock, air pressure is supplied through the unlocking port, thus disengaging the brake spring force.

Pneumatic locking type

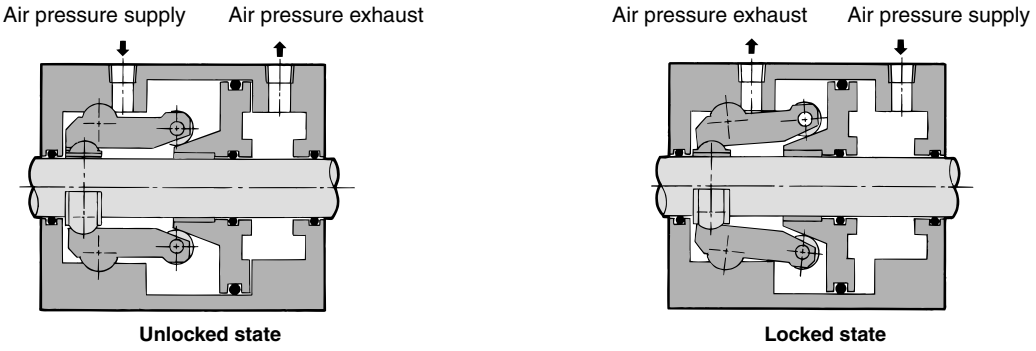

Brake piston is operated by air pressure.

Spring and pneumatic locking type

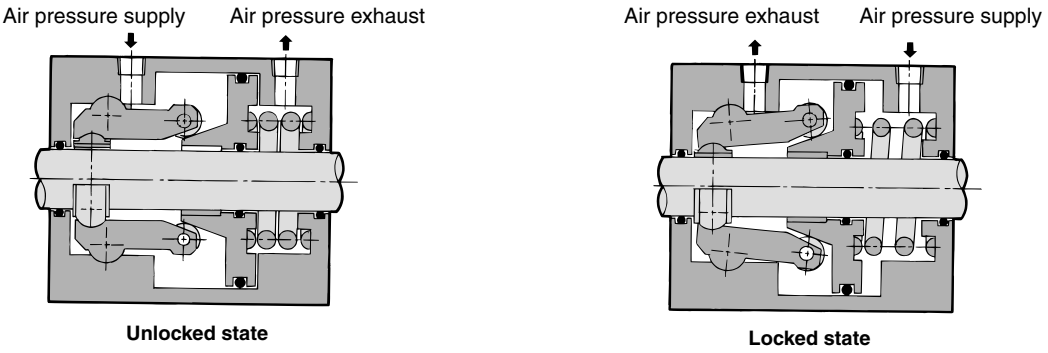

Brake piston is operated by air pressure and spring force.

Fine Lock Cylinder
Double Acting, Single Rod
Series CLM2
ø20, ø25, ø32, ø40

How to Order

CLM2 □ **L** **25** □ – **100** □ – **E** – □

With auto switch **CDLM2** □ **L** **25** □ – **100** □ – **E** – **M9BW** □ – □

With auto switch (Built-in magnet)

Type

Nil	Pneumatic
H	Air-hydro

Port thread type

Nil	Rc
TN	NPT

Made to Order
Refer to page 612 for details.

Mounting style

B	Basic style
L	Axial foot style
F	Rod side flange style
G	Head side flange style
C	Single clevis style
D	Double clevis style

T	Head side trunnion style
E	Clevis integrated style
BZ	Boss-cut basic style
FZ	Boss-cut flange style

Bore size

20	20 mm
25	25 mm
32	32 mm
40	40 mm

Number of auto switches

Nil	2 pcs.
S	1 pc.
n	"n" pcs.

Auto switch

Nil	Without auto switch

∗ For the applicable auto switch model, refer to the table below.

Cylinder stroke (mm)
Refer to "Standard Stroke" on page 612.

With rod boot

Nil	None
J	Nylon tarpaulin
K	Heat resistant tarpaulin

Lock operation

E	Spring locking (Exhaust locking)
P	Pneumatic locking (Pressure locking)
D	Spring and pneumatic locking

Built-in Magnet Cylinder Model

If a built-in magnet cylinder without an auto switch is required, there is no need to enter the symbol for the auto switch.
(Example) CDLM2F32-100-P

Applicable Auto Switch/Refer to pages 1719 to 1827 for further information on auto switches.

Type	Special function	Electrical entry	Indicator light	Wiring (Output)	Load voltage DC	Load voltage DC	Load voltage AC	Auto switch model	Lead wire length (m) 0.5 (Nil)	1 (M)	3 (L)	5 (Z)	None (N)	Pre-wired connector	Applicable load	
Solid state switch	——	Grommet	Yes	3-wire (NPN)	24 V	5 V, 12 V	—	M9N	●	●	●	○	○	○	IC circuit	Relay, PLC
				3-wire (PNP)				M9P	●	●	●	○	○	○		
				2-wire		12 V		M9B	●	●	●	○	○	○	—	
		Connector						H7C	●	—	●	●	●	—		
		Terminal conduit		3-wire (NPN)		5 V, 12 V		G39A	—	—	—	—	●	—	IC circuit	
				2-wire		12 V		K39A	—	—	—	—	●	—	—	
	Diagnostic indication (2-color indication)	Grommet		3-wire (NPN)		5 V,12 V		M9NW	●	●	●	○	○	○	IC circuit	
				3-wire (PNP)				M9PW	●	●	●	○	○	○		
				2-wire		12V		M9BW	●	●	●	○	○	○	—	
	Water resistant (2-color indication)							H7BA	—	—	●	○	○	○		
	With diagnostic output (2-color indication)			4-wire (NPN)		5 V, 12 V		H7NF	●	—	●	○	○	○	IC circuit	
Reed switch	——	Grommet	Yes	3-wire (NPN equivalent)	—	5V	—	A96	●	—	●	—	—	—	IC circuit	—
			No	2-wire	24 V	12 V	100 V	A93	●	—	●	—	—	—	—	Relay, PLC
			Yes				100 V or less	A90	●	—	●	—	—	—	IC circuit	
			No				100 V, 200V	B54	●	—	●	●	—	—	—	
			Yes				200 V or less	B64	●	—	●	—	—	—		
		Connector	No				—	C73C	●	—	●	●	●	—		
			Yes				24 V or less	C80C	●	—	●	●	●	—	IC circuit	
		Terminal conduit	No				—	A33A	—	—	—	—	●	—	—	PLC
			Yes				100 V, 200 V	A34A	—	—	—	—	●	—	—	Relay, PLC
		DIN terminal						A44A	—	—	—	—	●	—		
	Diagnostic indication (2-color indication)	Grommet				—	—	B59W	●	—	●	—	—	—		

∗ Lead wire length symbols: 0.5 m ·····Nil (Example) M9NW
1 m ·····M (Example) M9NWM
3 m ····· L (Example) M9NWL
5 m ····· Z (Example) M9NWZ
None ····· N (Example) H7CN

∗ Solid state auto switches marked with "○" are produced upon receipt of order.
∗ D-A9□V□/M9□V□/M9□WV□/M9□A(V)L types cannot be mounted.
∗ Do not indicate suffix "N" for no lead wire on D-A3□A/A44A/G39A/K39A models.

∗ Since there are other applicable auto switches than listed above, refer to page 624 for details.
∗ For details about auto switches with pre-wired connector, refer to pages 1784 and 1785.
∗ D-A9□/M9□/M9□W auto switches are shipped together (not assembled). (Only auto switch mounting brackets are assembled at the time of shipment.)

Provided with a compact lock mechanism, it is suitable for intermediate stop, emergency stop, and drop prevention.

Locking in both directions

The piston rod can be locked in either direction of its cylinder stroke.

Maximum piston speed: 500 mm/s

It can be used at 50 to 500 mm/s provided that it is within the allowable kinetic energy range.

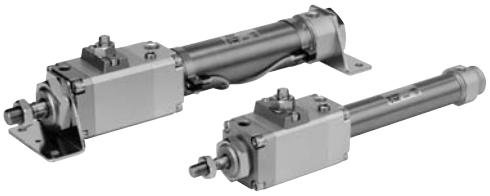

Made to Order Specifications

(For details, refer to page 1836.)

Symbol	Specifications
—XA□	Change of rod end shape

Rod Boot Material

Symbol	Rod boot material	Maximum ambient temperature
J	Nylon tarpaulin	70°C
K	Heat resistant tarpaulin	110°C *

* Maximum ambient temperature for the rod boot itself.

Refer to pages 621 to 624 for cylinders with auto switches.

- Minimum auto switch mounting stroke
- Proper auto switch mounting position (detection at stroke end) and mounting height
- Operating range
- Switch mounting bracket: Part no.

Specifications

Bore size (mm)	20	25	32	40
Action	Double acting, Single rod			
Type	Air cylinder			
Lock operation	Spring locking (Exhaust locking) Pneumatic locking (Pressurized locking), Spring and pneumatic locking			
Fluid	Air			
Proof pressure	1.5 MPa			
Maximum operating pressure	1.0 MPa			
Minimum operating pressure	0.08 MPa			
Ambient and fluid temperature	Without auto switch: –10 to 70°C (No freezing) With auto switch: –10 to 60°C (No freezing)			
Lubrication	Not required (Non-lube)			
Piston speed	50 to 500 mm/s *			
Cushion	Rubber bumper (Standard equipment)			
Stroke length tolerance	$^{+1.4}_{0}$			
Piping/Screw-in type	Rc 1/8			Rc 1/4
Mounting	Basic style, Axial foot style, Rod side flange style, Head side flange style, Single clevis style, Double clevis style, Head side trunnion style, Clevis integrated style, Boss-cut basic style, Boss-cut flange style			

* Constraints associated with the allowable kinetic energy are imposed on the speeds at which the piston can be locked. The maximum speed of 750 mm/s can be accommodated if the piston is to be locked in the stationary state for the purpose of drop prevention.

Fine Lock Specifications

Lock operation	Spring locking (Exhaust locking)	Spring and pneumatic locking	Pneumatic locking (Pressure locking)
Fluid	Air		
Maximum operating pressure	0.5 MPa		
Unlocking pressure	0.3 MPa or more		0.1 MPa or more
Lock starting pressure	0.25 MPa or less		0.05 MPa or more
Locking direction	Both directions		

* Refer to page 614 for the allowable kinetic energy when locking, holding force of spring locking and stopping accuracy.

Standard Stroke / Refer to the minimum auto switch mounting stroke (page 623) for those with an auto switch.

Bore size (mm)	Standard stroke (1) (mm)	Maximum stroke (mm)
20	25, 50, 75, 100, 125, 150 200, 250, 300	1000
25		1500
32		2000
40		2000

Note 1) Intermediate strokes other than listed above are produced upon receipt of order. Manufacture of intermediate strokes at 1 mm intervals is possible. (Spacers are not used.)

Note 2) When exceeding 300 strokes, the allowable maximum stroke length is determined by the stroke selection table (technical data).

Mounting Bracket and Accessory

Accessory / Mounting	Standard equipment			Option			
	Mounting nut	Rod end nut	Clevis pin	Single knuckle joint	Double(3) knuckle joint	Clevis(4) pivot bracket	Rod boot
Basic style	● (1pc.)	●	—	●	●	—	●
Axial foot style	● (2)	●	—	●	●	—	●
Rod side flange style	● (1)	●	—	●	●	—	●
Head side flange style	● (1)	●	—	●	●	—	●
Clevis integrated style	—(1)	●	—	●	●	●	●
Single clevis style	—(1)	●	—	●	●	—	●
Double clevis style(3)	—(1)	●	●	●	●	—	●
Head side trunnion style	● (1)(2)	●	—	●	●	—	●
Boss-cut basic style	● (1)	●	—	●	●	—	●
Boss-cut flange style	● (1)	●	—	●	●	—	●
Note					With pin	With pin	

Note 1) Mounting nut is not equipped with clevis integrated style, single clevis style and double clevis style.
Note 2) Trunnion nuts are attached for head side trunnion style.
Note3) Pin and retaining ring (ø40: cotter pin) are shipped together with double clevis and double knuckle joint.
Note 4) Pin and retaining ring are shipped together with clevis pivot bracket.

Mass

(kg)

Bore size (mm)		20	25	32	40
Basic mass	Basic style	0.55	0.87	0.94	1.30
	Axial foot style	0.70	1.03	1.10	1.57
	Flange style	0.61	0.96	1.03	1.42
	Clevis integrated style	0.53	0.85	0.93	1.26
	Single clevis style	0.59	0.91	0.98	1.39
	Double clevis style	0.60	0.93	0.99	1.43
	Trunnion style	0.59	0.94	1.00	1.40
	Boss-cut basic style	0.54	0.85	0.92	1.27
	Boss-cut flange style	0.60	0.94	1.01	1.39
Additional mass per each 50 mm of stroke		0.04	0.06	0.08	0.13
Option bracket	Clevis bracket (With pin)	0.07	0.07	0.14	0.14
	Single knuckle joint	0.06	0.06	0.06	0.23
	Double knuckle joint (With pin)	0.07	0.07	0.07	0.20

Calculation: (Example) **CLM2L32-100-E**
- Basic mass ····· 1.10 (Foot, ø32)
- Additional mass ····· 0.08/50 stroke
- Cylinder stroke ····· 100 stroke 1.10 + 0.08 x 100/50 = 1.26 kg

Mounting Bracket Part No.

Bore size (mm)	20	25	32	40
Axial foot *	CM-L020B	CM-L032B		CM-L040B
Flange	CM-F020B	CM-F032B		CM-F040B
Single clevis	CM-C020B	CM-C032B		CM-C040B
Double clevis **	CM-D020B	CM-D032B		CM-D040B
Trunnion (with nut)	CM-T020B	CM-T032B		CM-T040B

* When ordering foot bracket, order 2 pieces per cylinder.
** Clevis pin and retaining ring (ø40: cotter pin) are shipped together with double clevis style.

Boss-cut style

Boss for the head side cover bracket is eliminated and the total length of cylinder is shortened.



Comparison of the full length dimension (Versus standard type)

(mm)

ø20	ø25	ø32	ø40
▲13	▲13	▲13	▲16

Mounting style

■ Boss-cut basic style **(BZ)** ■ Boss-cut flange style **(FZ)**

Air-hydro

CLM2H | **Mounting style** | **Bore size** | — | **Stroke** | **Rod boot**

● **Air-hydro**

Low hydraulic cylinder 1 MPa or less
Through the concurrent use of a CC series air-hydro unit, it is possible to operate at a constant or low speeds or to effect an intermediate stop, just like a hydraulic unit, while using pneumatic equipment such as a valve.



Specifications

Fluid	Turbine oil (Lock portion is air)
Action	Double acting, Single rod
Bore size (mm)	ø20, ø25, ø32, ø40
Maximum operating pressure	1.0 MPa
Minimum operating pressure	0.2 MPa
Piston speed	15 to 300 mm/s
Cushion	Rubber bumper (Standard equipment)
Piping	Screw-in type
Mounting	Basic style, Axial foot style, Rod side flange style Head side flange style, Single clevis style Double clevis style, Head side trunnion style Clevis integrated style, Boss-cut style

* Auto switch capable
- For an exterior dimension diagram to identify the mounting support types, refer to pages 616 to 620 as the dimensions are identical to those of standard.

⚠ Caution/Allowable Kinetic Energy when Locking

Bore size (mm)	20	25	32	40
Allowable kinetic energy (J)	0.26	0.42	0.67	1.19

1. In terms of specific load conditions, the allowable kinetic energy indicated in the table above is equivalent to a 50% load ratio at 0.5 MPa, and a piston speed of 300 mm/sec. Therefore, if the operating conditions are below these values, calculations are unnecessary.
2. Apply the following formula to obtain the kinetic energy of the load.

$$Ek = \frac{1}{2} m\upsilon^2$$

Ek: Kinetic energy of load (J)
m: Load mass (kg)
υ: Piston speed (m/s)

3. The piston speed will exceed the average speed immediately before locking. To determine the piston speed for the purpose of obtaining the kinetic energy of load, use 1.2 times the average speed as a guide.
4. The relation between the speed and the load of the respective tube bores is indicated in the diagram below. Use the cylinder in the range below the line.
5. During locking, the lock mechanism must sustain the thrust of the cylinder itself, in addition to absorbing the energy of the load. Therefore, even within a given allowable kinetic energy level, there is an upper limit to the size of the load that can be sustained. Thus, a horizontally mounted cylinder must be operated below the solid line, and a vertically mounted cylinder must be operated below the dotted line.

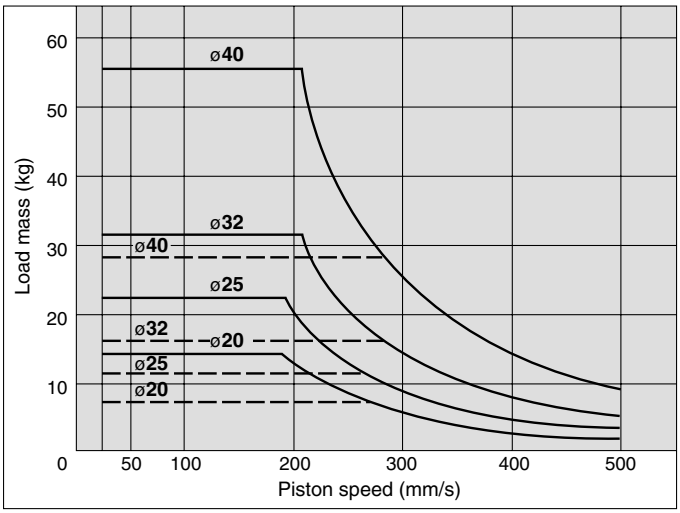

Stopping Accuracy (Not including tolerance of control system.) (mm)

Locking method	Piston speed (mm/s)				
	20 *	50	100	300	500
Spring locking (Exhaust locking)	±0.3	±0.4	±0.5	±1.0	±2.0
Pneumatic locking (Pressure locking) Spring and pneumatic locking	±0.15	±0.2	±0.3	±0.5	±1.5

Conditions: Load: 25% of thrust force at 0.5 MPa
Solenoid valve: Mounted to the lock port
20 mm/s marked with the asterisk is in the case of actuating hydraulically by means of air-hydro type.

⚠ Caution

Recommended Pneumatic Circuit/Caution on Handling

For detailed speceifications of the fine lock cylinder, Series CLM2 mentioned above, refer to pages 596 to 599.

Accessory

For accessory dimensions, refer to pages 144 and 145 in Best Pneumatics No. 2, since it is same as Series CM2.

Holding Force of Spring Locking (Maximum static load)

Bore size (mm)	20	25	32	40
Holding force (N)	196	313	443	784

Note) Holding force at piston rod extended side decreases approximately 15%.

Holding Force of Spring Locking (Maximum static load)

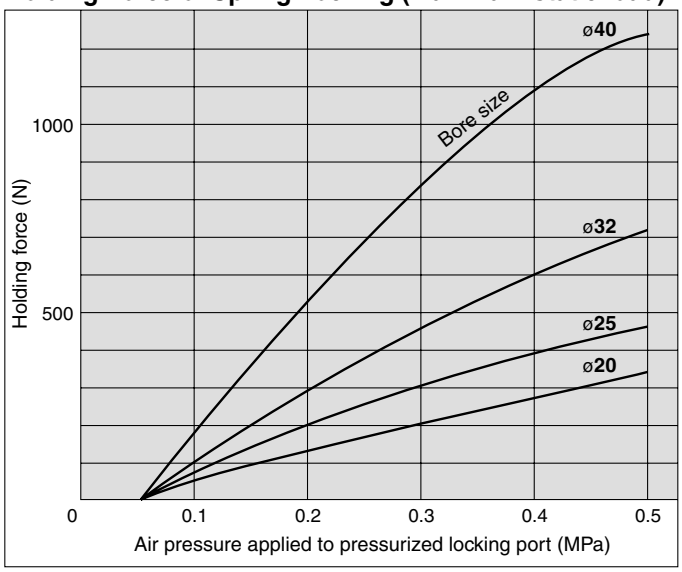

* When selecting cylinders, refer to the Precautions and allowable kinetic energy when locking on page 596, and then select a cylinder.

⚠ Caution

Caution when Locking

Holding force is the force which can hold a static load, given no vibration or impact in a locked state. Therefore, do not use cylinders around the maximum holding force. Note the following points.

- If the piston rod slips because the lock's holding force has been exceeded, the brake shoe could be damaged, resulting in a reduced holding force or shortened life.
- Do not use the cylinder in the locked state to sustain a load that involves impact.
- To use the lock for drop prevention purposes, the load to be attached to the cylinder must be within 35% of the cylinder's holding force.

Construction (Not able to disassemble)

Spring locking (Exhaust locking)
Spring and pneumatic locking

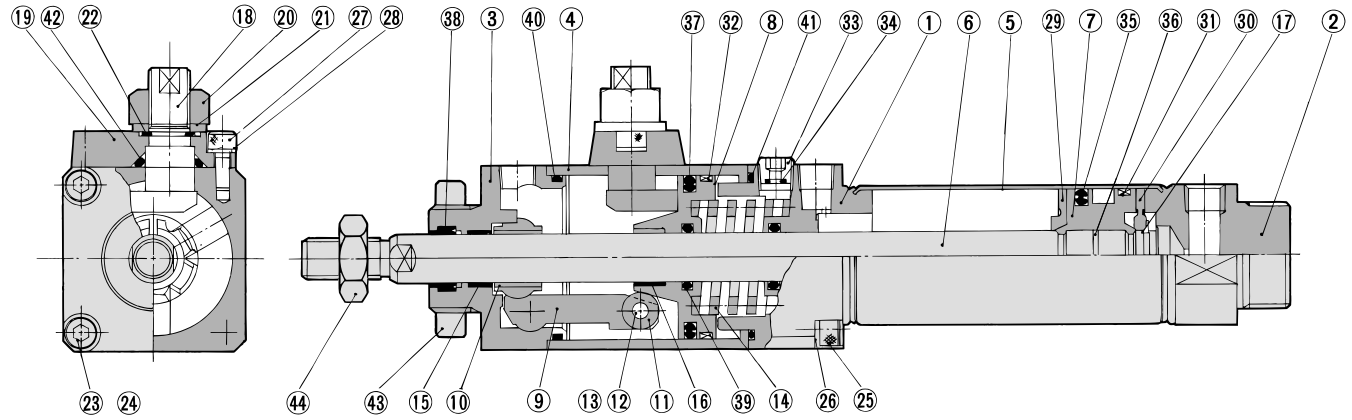

Pneumatic locking (Pressure locking)

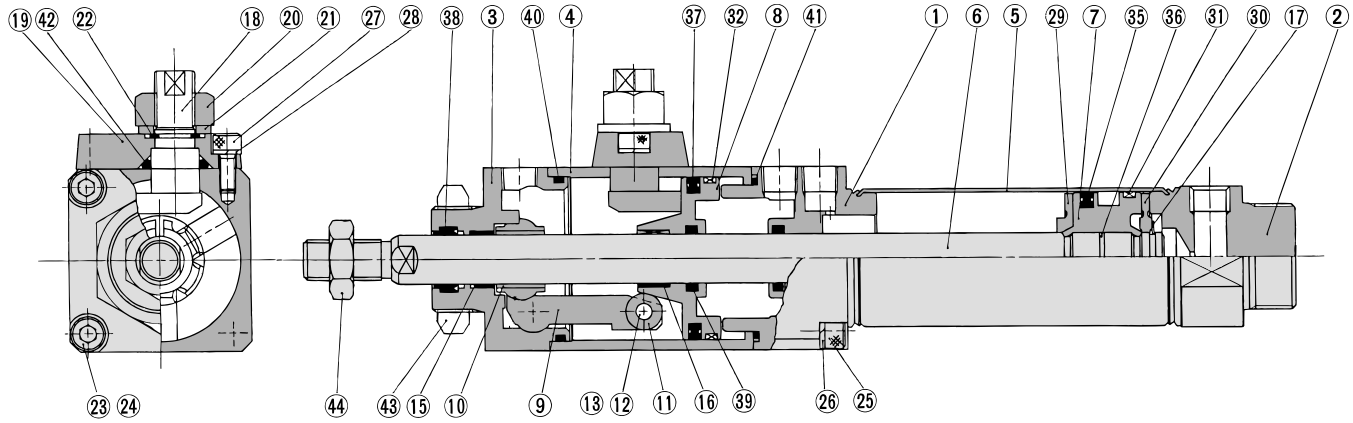

Component Parts

No.	Description	Material	Note
1	**Rod cover**	Aluminum alloy	Clear anodized
2	**Head cover**	Aluminum alloy	Clear anodized
3	**Cover**	Carbon steel	Nitrided, chrome plated
4	**Intermediate cover**	Aluminum alloy	Hard anodized
5	**Cylinder tube**	Stainless steel	
6	**Piston rod**	Carbon steel	Hard chrome plated
7	**Piston**	Aluminum alloy	Chromated
8	**Brake piston**	Carbon steel	Nitrided
9	**Brake arm**	Carbon steel	Nitrided
10	**Brake shoe**	Special friction material	
11	**Roller**	Carbon steel	
12	**Pin**	Carbon steel	
13	**Retaining ring**	Carbon tool steel	Nickel plated
14	**Brake spring**	Spring steel wire	Dacrodized
15	**Bushing**	Oil-impregnated sintered alloy	
16	**Bushing**	Oil-impregnated sintered alloy	
17	**Retaining ring**	Carbon tool steel	Nickel plated
18	**Manual lock release cam**	Chromium molybdenum steel	Nickel plated
19	**Cam guide**	Carbon steel	Nitrided, painted
20	**Lock nut**	Rolled steel	Nickel plated
21	**Flat washer**	Rolled steel	Nickel plated
22	**Retaining ring**	Carbon tool steel	Nickel plated
23	**Hexagon socket head cap screw**	Chromium molybdenum steel	Nickel plated

No.	Description	Material	Note
24	**Spring washer**	Steel wire	Nickel plated
25	**Hexagon socket head cap screw**	Chromium molybdenum steel	Nickel plated
26	**Spring washer**	Steel wire	Nickel plated
27	**Hexagon socket head cap screw**	Chromium molybdenum steel	Nickel plated
28	**Spring washer**	Steel wire	Nickel plated
29	**Bumper A**	Urethane	
30	**Bumper B**	Urethane	
31	**Wear ring**	Resin	
32	**Wear ring**	Resin	
33	**Hexagon socket head plug**	Carbon steel	Type E only
34	**Element**	Bronze	Type E only
35	**Piston seal**	NBR	
36	**Piston gasket**	NBR	
37	**Brake piston seal**	NBR	
38	**Rod seal A**	NBR	
39	**Rod seal B**	NBR	
40	**Middle cover gasket A**	NBR	
41	**Middle cover gasket B**	NBR	
42	**Cam gasket**	NBR	
43	**Mounting nut**	Carbon steel	Nickel plated
44	**Rod end nut**	Carbon steel	Nickel plated

Basic Style (B)

CLM2B Bore size — Stroke

Standard style

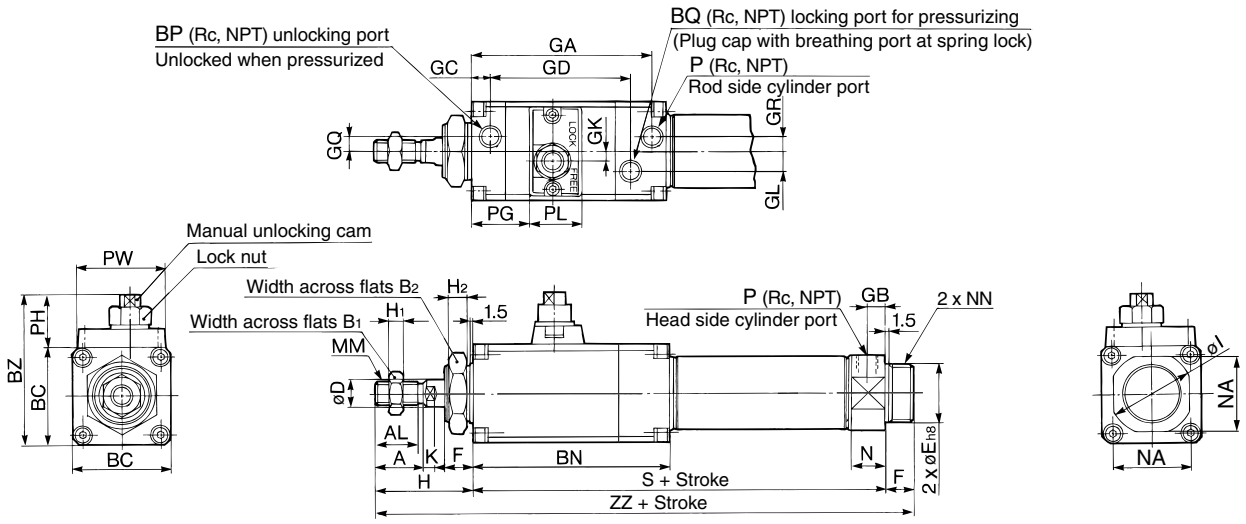

Boss-cut style

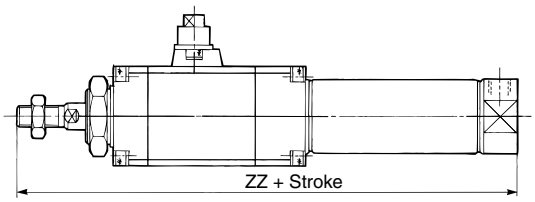

With rod boot

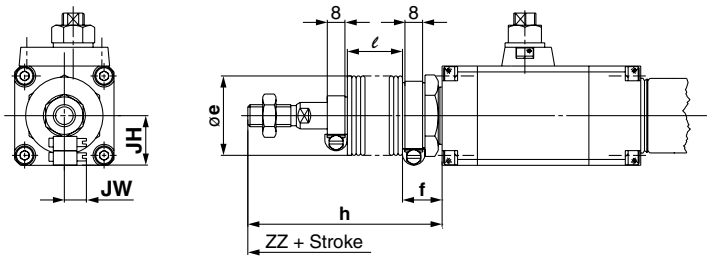

(mm)

Bore (mm)	Stroke range	A	AL	B_1	B_2	BC	BN	BP	BQ	BZ	D	E	F	GA	GB	GC	GD	GK	GL	GQ	GR	H	H_1	H_2	I
20	Up to 300	18	15.5	13	26	38	80	1/8	1/8	57.5	8	$20^{\ 0}_{-0.033}$	13	73.5	8	8	55	3.5	6	4	4	41	5	8	28
25	Up to 300	22	19.5	17	32	45	90	1/8	1/8	69	10	$26^{\ 0}_{-0.033}$	13	83.5	8	9	64.5	4	9	7	7	45	6	8	33.5
32	Up to 300	22	19.5	17	32	45	90	1/8	1/8	69	12	$26^{\ 0}_{-0.033}$	13	83.5	8	9	64.5	4	9	7	7	45	6	8	37.5
40	Up to 300	24	21	22	41	52	100.5	1/8	1/8	76	14	$32^{\ 0}_{-0.039}$	16	90.5	11	8	70	4	11	8	7	50	8	10	46.5

(mm)

Bore (mm)	K	MM	N	NA	NN	P	PG	PH	PL	PW	S	ZZ
20	5	M8 x 1.25	15	24	M20 x 1.5	1/8	22	19.5	20	38	127	181
25	5.5	M10 x 1.25	15	30	M26 x 1.5	1/8	27	24	24	41	137	195
32	5.5	M10 x 1.25	15	34.5	M26 x 1.5	1/8	27	24	24	41	139	197
40	7	M14 x 1.5	21.5	42.5	M32 x 2	1/4	29	24	24	41	167	233

Boss-cut

Bore (mm)	ZZ
20	168
25	182
32	184
40	217

With Rod Boot

(mm)

Bore (mm)	e	f	h					ℓ					ZZ					JH	JW
			1 to 50	51 to 100	101 to 150	151 to 200	201 to 300	1 to 50	51 to 100	101 to 150	151 to 200	201 to 300	1 to 50	51 to 100	101 to 150	151 to 200	201 to 300	(Reference)	(Reference)
20	36	17	68	81	93	106	131	12.5	25	37.5	50	75	208	221	233	246	271	23.5	10.5
25	36	17	72	85	97	110	135	12.5	25	37.5	50	75	222	232	247	260	285	23.5	10.5
32	36	17	72	85	97	110	135	12.5	25	37.5	50	75	224	237	249	262	287	23.5	10.5
40	46	19	77	90	102	115	140	12.5	25	37.5	50	75	260	273	285	298	323	23.5	10.5

Axial Foot Style (L)

CLM2L **Bore size** — **Stroke** □

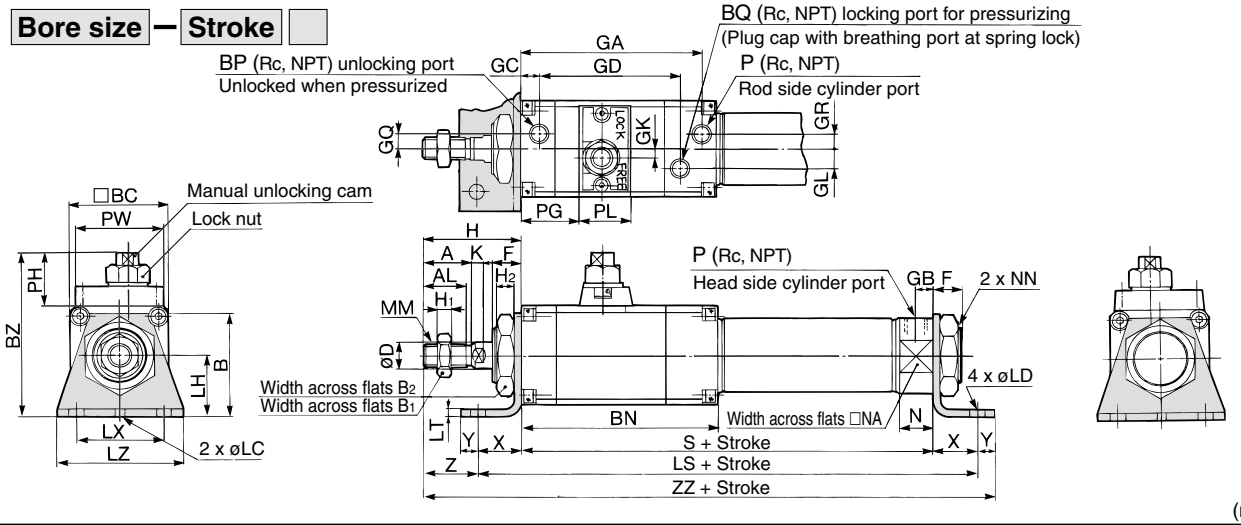

(mm)

Bore (mm)	Stroke range	A	AL	B	B_1	B_2	BC	BN	BP	BQ	BZ	D	F	GA	GB	GC	GD	GK	GL	GQ	GR	H	H_1	H_2
20	Up to 400	18	15.5	40	13	26	38	80	1/8	1/8	63.5	8	13	73.5	8	8	55	3.5	6	4	4	41	5	8
25	Up to 450	22	19.5	47	17	32	45	90	1/8	1/8	74.5	10	13	83.5	8	9	64.5	4	9	7	7	45	6	8
32	Up to 450	22	19.5	47	17	32	45	90	1/8	1/8	74.5	12	13	83.5	8	9	64.5	4	9	7	7	45	6	8
40	Up to 500	24	21	54	22	41	52	100.5	1/8	1/8	80	14	16	90.5	11	8	70	4	11	8	7	50	8	10

(mm)

Bore (mm)	K	LC	LD	LH	LS	LT	LX	LZ	MM	N	NA	NN	P	PG	PH	PL	PW	S	X	Y	Z	ZZ
20	5	4	6.8	25	167	3.2	40	55	M8 x 1.25	15	24	M20 x 1.5	1/8	22	19.5	20	38	127	20	8	21	196
25	5.5	4	6.8	28	177	3.2	40	55	M10 x 1.25	15	30	M26 x 1.5	1/8	27	24	24	41	137	20	8	25	210
32	5.5	4	6.8	28	179	3.2	40	55	M10 x 1.25	15	34.5	M26 x 1.5	1/8	27	24	24	41	139	20	8	25	212
40	7	4	7	30	213	3.2	55	75	M14 x 1.5	21.5	42.5	M32 x 2	1/4	29	24	24	41	167	23	10	27	250

Head Side Flange Style (G)

CLM2G **Bore size** — **Stroke** □

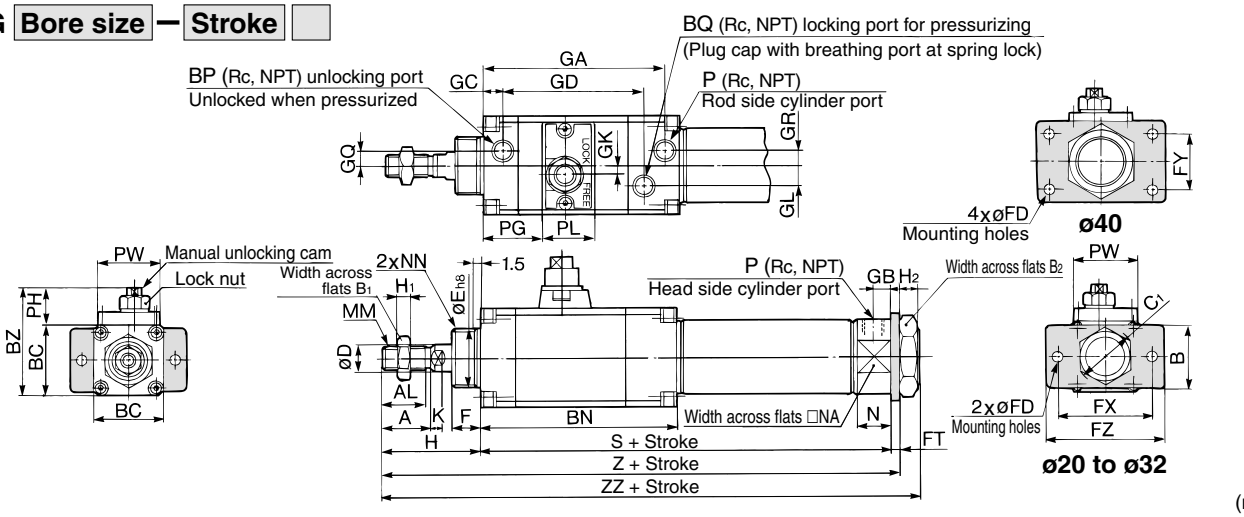

(mm)

Bore (mm)	Stroke range	A	AL	B	B_1	B_2	BC	BN	BP	BQ	BZ	C_1	D	E	F	FD	FT	FX	FY	FZ	GA	GB
20	Up to 300	18	15.5	34	13	26	38	80	1/8	1/8	57.5	30	8	$20^{0}_{-0.033}$	13	7	4	60	—	75	73.5	8
25	Up to 300	22	19.5	40	17	32	45	90	1/8	1/8	69	37	10	$26^{0}_{-0.033}$	13	7	4	60	—	75	83.5	8
32	Up to 300	22	19.5	40	17	32	45	90	1/8	1/8	69	37	12	$26^{0}_{-0.033}$	13	7	4	60	—	75	83.5	8
40	Up to 300	24	21	52	22	41	52	100.5	1/8	1/8	76	47.3	14	$32^{0}_{-0.039}$	16	7	5	66	36	82	90.5	11

(mm)

Bore (mm)	GB	GC	GD	GK	GL	GQ	GR	H	H_1	H_2	K	MM	N	NA	NN	P	PG	PH	PL	PW	S	Z	ZZ
20	8	55	3.5	6	4	4	4	41	5	8	5	M8 x 1.25	15	24	M20 x 1.5	1/8	22	19.5	20	38	127	172	181
25	9	64.5	4	9	7	7	7	45	6	8	5.5	M10 x 1.25	15	30	M26 x 1.5	1/8	27	24	24	41	137	186	195
32	9	64.5	4	9	7	7	7	45	6	8	5.5	M10 x 1.25	15	34.5	M26 x 1.5	1/8	27	24	24	41	139	188	197
40	8	70	4	11	8	7	7	50	8	10	7	M14 x 1.5	21.5	42.5	M32 x 2	1/4	29	24	24	41	167	222	233

Rod Side Flange Style (F)

CLM2F Bore size — Stroke

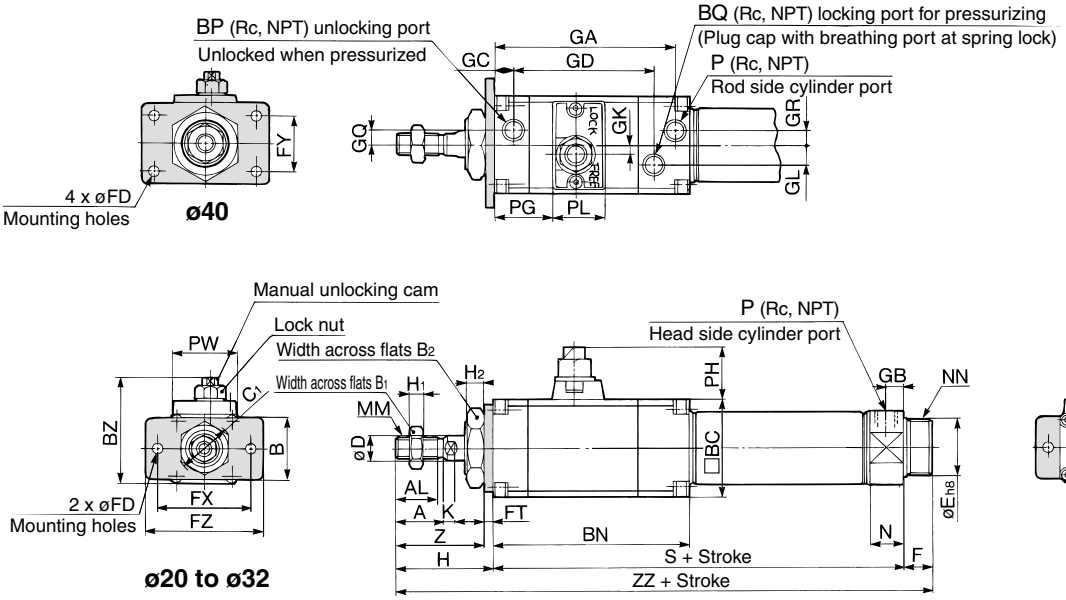

Boss-cut style

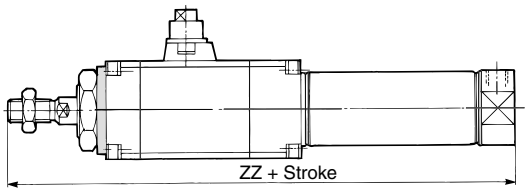

(mm)

Bore (mm)	Stroke range	A	AL	B	B_1	B_2	BC	BN	BP	BQ	BZ	C_1	D	E	F	FD	FT	FX	FY	FZ	GA	GB	GC	GD	GK
20	Up to 400	18	15.5	34	13	26	38	80	1/8	1/8	57.5	30	8	$20^{0}_{-0.033}$	13	7	4	60	—	75	73.5	8	8	55	3.5
25	Up to 450	22	19.5	40	17	32	45	90	1/8	1/8	69	37	10	$26^{0}_{-0.033}$	13	7	4	60	—	75	83.5	8	9	64.5	4
32	Up to 450	22	19.5	40	17	32	45	90	1/8	1/8	69	37	12	$26^{0}_{-0.033}$	13	7	4	60	—	75	83.5	8	9	64.5	4
40	Up to 500	24	21	52	22	41	52	100.5	1/8	1/8	76	47.3	14	$32^{0}_{-0.039}$	16	7	5	66	36	82	90.5	11	8	70	4

(mm)

Bore (mm)	GL	GQ	GR	H	H_1	H_2	I	K	MM	N	NA	NN	P	PG	PH	PL	PW	S	Z	ZZ
20	6	4	4	41	5	8	28	5	M8 x 1.25	15	24	M20 x 1.5	1/8	22	19.5	20	38	127	37	181
25	9	7	7	45	6	8	33.5	5.5	M10 x 1.25	15	30	M26 x 1.5	1/8	27	24	24	41	137	41	195
32	9	7	7	45	6	8	37.5	5.5	M10 x 1.25	15	34.5	M26 x 1.5	1/8	27	24	24	41	139	41	197
40	11	8	7	50	8	10	46.5	7	M14 x 1.5	21.5	42.5	M32 x 2	1/4	29	24	24	41	167	45	233

Boss-cut

Bore (mm)	ZZ
20	168
25	182
32	184
40	217

Single Clevis Style (C)

CLM2C **Bore size** — **Stroke** □

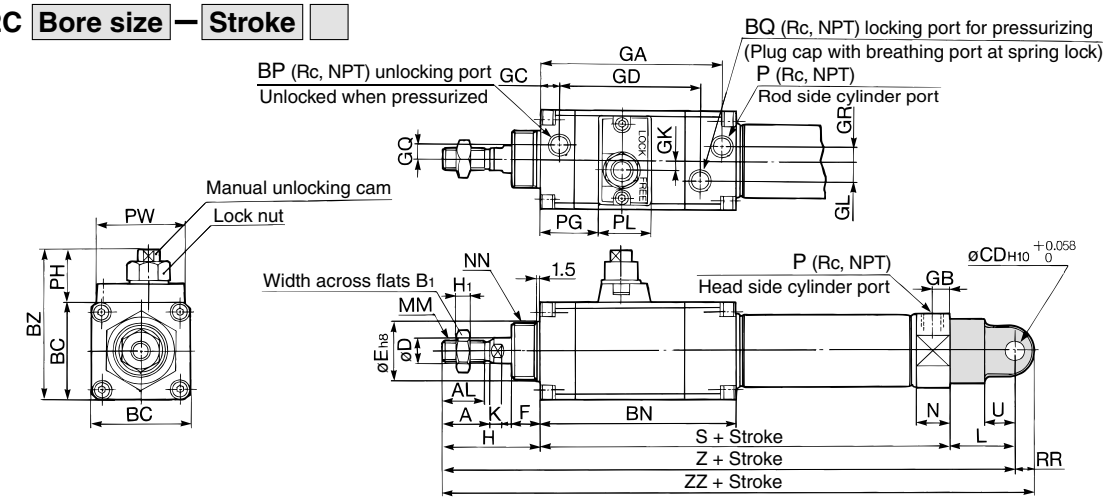

(mm)

Bore (mm)	Stroke range	A	AL	B1	BC	BN	BP	BQ	BZ	CD	CX	D	E	F	GA	GB	GC	GD	GK	GL	GQ
20	Up to 300	18	15.5	13	38	80	1/8	1/8	57.5	9	10	8	$20^{0}_{-0.033}$	13	73.5	8	8	55	3.5	6	4
25	Up to 300	22	19.5	17	45	90	1/8	1/8	69	9	10	10	$26^{0}_{-0.033}$	13	83.5	8	9	64.5	4	9	7
32	Up to 300	22	19.5	17	45	90	1/8	1/8	69	9	10	12	$26^{0}_{-0.033}$	13	83.5	8	9	64.5	4	9	7
40	Up to 300	24	21	22	52	100.5	1/8	1/8	76	10	15	14	$32^{0}_{-0.039}$	16	90.5	11	8	70	4	11	8

Bore (mm)	GR	H	H1	I	K	L	MM	N	NA	NN	P	PG	PH	PL	PW	RR	S	U	Z	ZZ
20	4	41	5	28	5	30	M8 x 1.25	15	24	M20 x 1.5	1/8	22	19.5	20	38	9	127	14	198	207
25	7	45	6	33.5	5.5	30	M10 x 1.25	15	30	M26 x 1.5	1/8	27	24	24	41	9	137	14	212	221
32	7	45	6	37.5	5.5	30	M10 x 1.25	15	34.5	M26 x 1.5	1/8	27	24	24	41	9	139	14	214	223
40	7	50	8	46.5	7	39	M14 x 1.5	21.5	42.5	M32 x 2	1/4	29	24	24	41	11	167	18	256	267

Double Clevis Style (D)

CLM2D **Bore size** — **Stroke** □

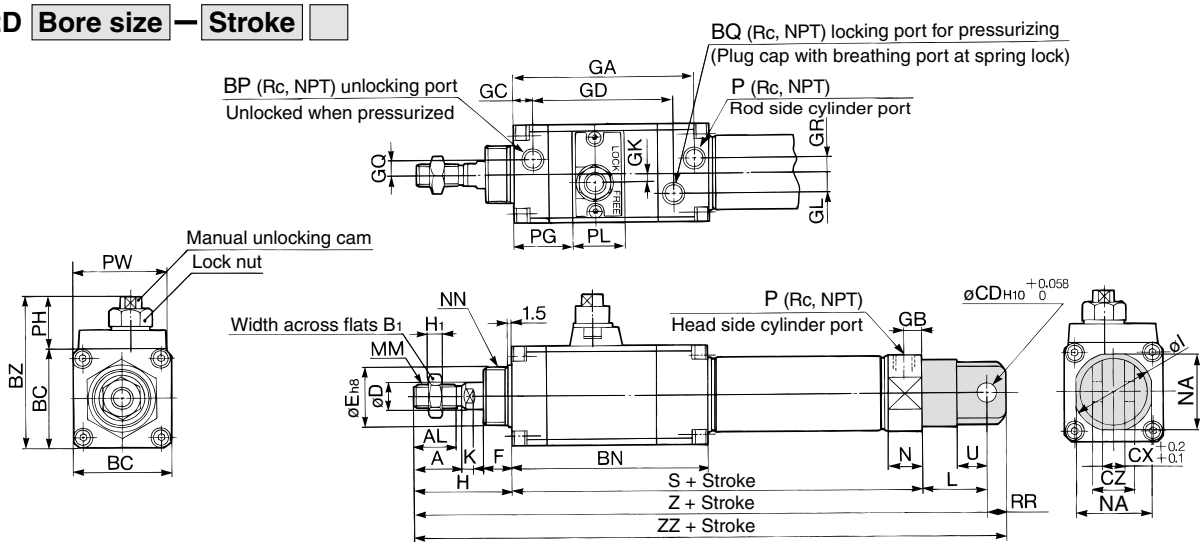

(mm)

Bore (mm)	Stroke range	A	AL	B1	BC	BN	BP	BQ	BZ	CD	CX	CZ	D	E	F	GA	GB	GC	GD	GK	GL
20	Up to 300	18	15.5	13	38	80	1/8	1/8	57.5	9	10	19	8	$20^{0}_{-0.033}$	13	73.5	8	8	55	3.5	6
25	Up to 300	22	19.5	17	45	90	1/8	1/8	69	9	10	19	10	$26^{0}_{-0.033}$	13	83.5	8	9	64.5	4	9
32	Up to 300	22	19.5	17	45	90	1/8	1/8	69	9	10	19	12	$26^{0}_{-0.033}$	13	83.5	8	9	64.5	4	9
40	Up to 300	24	21	22	52	100.5	1/8	1/8	76	10	15	30	14	$32^{0}_{-0.039}$	16	90.5	11	8	70	4	11

Bore (mm)	GQ	GR	H	H1	I	K	L	MM	N	NA	NN	P	PG	PH	PL	PW	RR	S	U	Z	ZZ
20	4	4	41	5	28	5	30	M8 x 1.25	15	24	M20 x 1.5	1/8	22	19.5	20	38	9	127	14	198	207
25	7	7	45	6	33.5	5.5	30	M10 x 1.25	15	30	M26 x 1.5	1/8	27	24	24	41	9	137	14	212	221
32	7	7	45	6	37.5	5.5	30	M10 x 1.25	15	34.5	M26 x 1.5	1/8	27	24	24	41	9	139	14	214	223
40	8	7	50	8	46.5	7	39	M14 x 1.5	21.5	42.5	M32 x 2	1/4	29	24	24	41	11	167	18	256	267

∗ Clevis pin and snap ring (ø40: cotter pin) are shipped together.

Head Side Trunnion Style (T)

CLM2T Bore size — Stroke

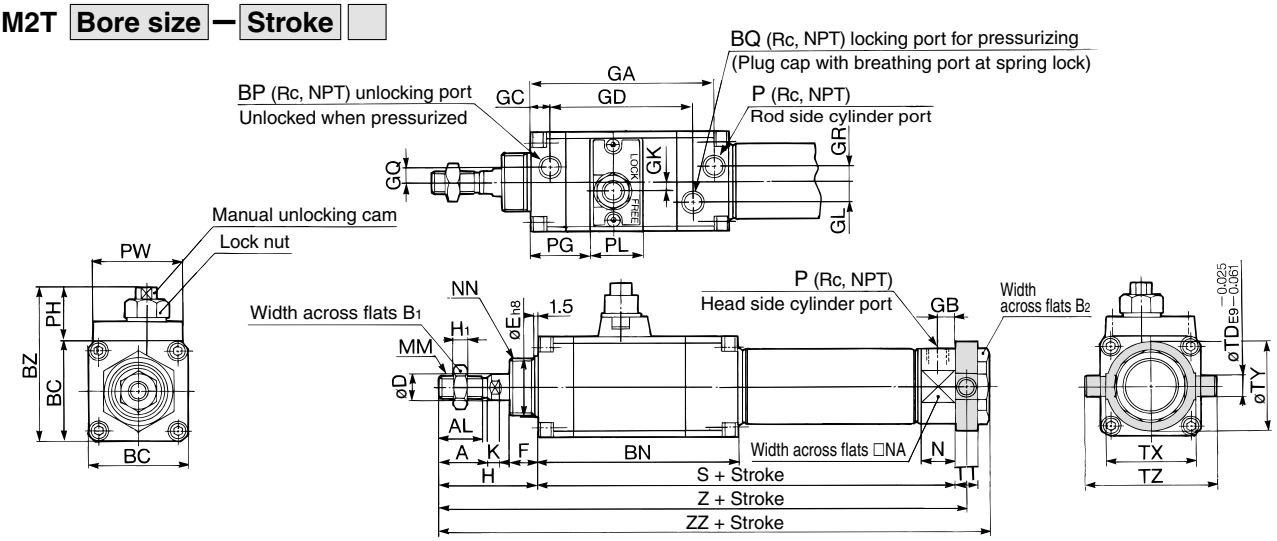

(mm)

Bore (mm)	Stroke range	A	AL	B1	B2	BC	BN	BP	BQ	BZ	D	E	F	GA	GB	GC	GD	GK	GL	GQ
20	Up to 300	18	15.5	13	26	38	80	1/8	1/8	57.5	8	$20^{0}_{-0.033}$	13	73.5	8	8	55	3.5	6	4
25	Up to 300	22	19.5	17	32	45	90	1/8	1/8	69	10	$26^{0}_{-0.033}$	13	83.5	8	9	64.5	4	9	7
32	Up to 300	22	19.5	17	32	45	90	1/8	1/8	69	12	$26^{0}_{-0.033}$	13	83.5	8	9	64.5	4	9	7
40	Up to 300	24	21	22	41	52	100.5	1/8	1/8	76	14	$32^{0}_{-0.039}$	16	90.5	11	8	70	4	11	8

Bore (mm)	GR	H	H1	K	MM	N	NA	NN	P	PG	PH	PL	PW	S	TD	TT	TX	TY	TZ	Z	ZZ
20	4	41	5	5	M8 x 1.25	15	24	M20 x 1.5	1/8	22	19.5	20	38	127	8	10	32	32	52	173	183
25	7	45	6	5.5	M10 x 1.25	15	30	M26 x 1.5	1/8	27	24	24	41	137	9	10	40	40	60	187	197
32	7	45	6	5.5	M10 x 1.25	15	34.5	M26 x 1.5	1/8	27	24	24	41	139	9	10	40	40	60	189	199
40	7	50	8	7	M14 x 1.5	21.5	42.5	M32 x 2	1/4	29	24	24	41	167	10	11	53	53	77	222.5	233

Clevis Integrated Style (E)

CLM2E Bore size — Stroke

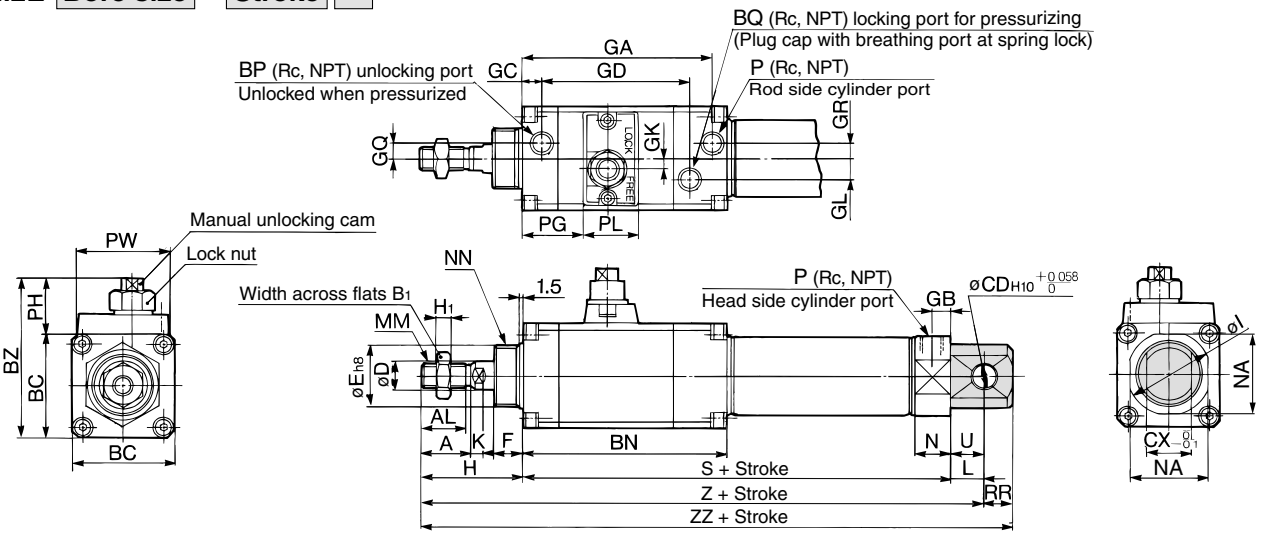

(mm)

Bore (mm)	Stroke range	A	AL	B1	BC	BN	BP	BQ	BZ	CD	CX	D	E	F	GA	GB	GC	GD	GK	GL	GQ
20	Up to 300	18	15.5	13	38	80	1/8	1/8	57.5	8	12	8	$20^{0}_{-0.033}$	13	73.5	8	8	55	3.5	6	4
25	Up to 300	22	19.5	17	45	90	1/8	1/8	69	8	12	10	$26^{0}_{-0.033}$	13	83.5	8	9	64.5	4	9	7
32	Up to 300	22	19.5	17	45	90	1/8	1/8	69	10	20	12	$26^{0}_{-0.033}$	13	83.5	8	9	64.5	4	9	7
40	Up to 300	24	21	22	52	100.5	1/8	1/8	76	10	20	14	$32^{0}_{-0.039}$	16	90.5	11	8	70	4	11	8

Bore (mm)	GR	H	H1	I	K	L	MM	N	NA	NN	P	PG	PH	PL	PW	RR	S	U	Z	ZZ
20	4	41	5	28	5	12	M8 x 1.25	15	24	M20 x 1.5	1/8	22	19.5	20	38	9	127	11.5	180	189
25	7	45	6	33.5	5.5	12	M10 x 1.25	15	30	M26 x 1.5	1/8	27	24	24	41	9	137	11.5	194	203
32	7	45	6	37.5	5.5	15	M10 x 1.25	15	34.5	M26 x 1.5	1/8	27	24	24	41	12	139	14.5	199	211
40	7	50	8	46.5	7	15	M14 x 1.5	21.5	42.5	M32 x 2	1/4	29	24	24	41	12	167	14.5	232	244

Accessory Bracket Dimensions

Single Knuckle Joint (mm)

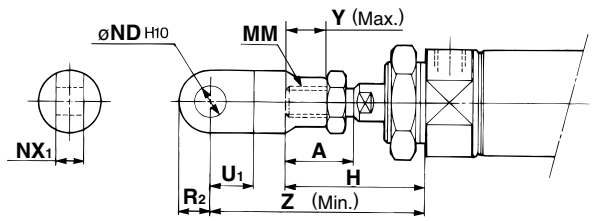

Bore size	A	H	MM	ND H10	NX1	U1	R2	Y	Z
20	18	41	M8 x 1.25	$9^{+0.058}_{0}$	$9^{-0.1}_{-0.2}$	14	10	11	66
25, 32	22	45	M10 x 1.25	$9^{+0.058}_{0}$	$9^{-0.1}_{-0.2}$	14	10	14	69
40	24	50	M14 x 1.5	$12^{+0.070}_{0}$	$16^{-0.1}_{-0.3}$	20	14	13	92

Single Knuckle Joint (mm)

I-020B/032B Material: Rolled steel **I-040B** Material: Free cutting sulfur steel

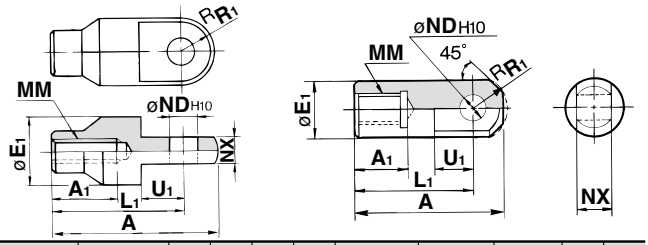

Part no.	Applicable bore size	A	A1	E1	L1	MM	ND H10	NX	R1	U1
I-020B	20	46	16	20	36	M8 x 1.25	$9^{+0.058}_{0}$	$9^{-0.1}_{-0.2}$	10	14
I-032B	25, 32	48	18	20	38	M10 x 1.25	$9^{+0.058}_{0}$	$9^{-0.1}_{-0.2}$	10	14
I-040B	40	69	22	24	55	M14 x 1.5	$12^{+0.070}_{0}$	$16^{-0.1}_{-0.3}$	15.5	20

Double Knuckle Joint (mm)

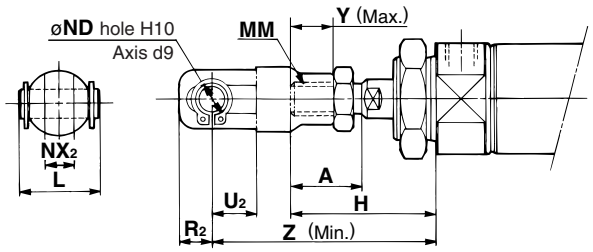

Bore size	A	H	L	MM	ND	NX2	R2	U2	Y	Z
20	18	41	25	M8 x 1.25	9	$9^{+0.2}_{+0.1}$	10	14	11	66
25, 32	22	45	25	M10 x 1.25	9	$9^{+0.2}_{+0.1}$	10	14	14	69
40	24	50	49.7	M14 x 1.5	12	$16^{+0.3}_{+0.1}$	13	25	13	92

Double Knuckle Joint (mm)

Y-020B/Y-032B Material: Rolled steel **Y-040B** Material: Cast iron

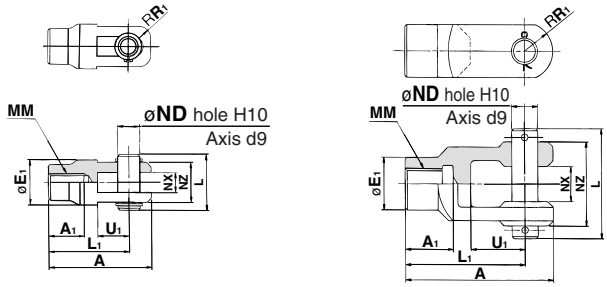

Part no.	Applicable bore size	A	A1	E1	L	L1	MM	ND	NX	NZ	R1	U1	Applicable pin part number	Retaining ring Cotter pin size
Y-020B	20	46	16	20	25	36	M8 x 1.25	9	$9^{+0.2}_{+0.1}$	18	5	14	CDP-1	Type C 9 for axis
Y-032B	25, 32	48	18	20	25	38	M10 x 1.25	9	$9^{+0.2}_{+0.1}$	18	5	14	CDP-1	Type C 9 for axis
Y-040B	40	68	22	24	49.7	55	M14 x 1.5	12	$16^{+0.3}_{+0.1}$	38	13	25	CDP-3	ø3 x 18ℓ

∗ Clevis pin and retaining ring (cotter pin for 40) are attached.

Double Clevis Pin/Material: Carbon steel (mm)

Bore size/ø20, ø25, ø32

CDP-1

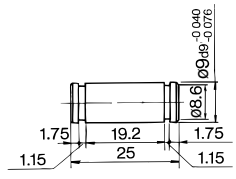

Retaining ring: Type C9 for axis

Bore size/ø40

CDP-2

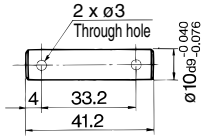

Cotter pin
ø3 x 18ℓ

∗ Retaining rings (cotter pins for ø40) are attached.

Double Knuckle Pin/Material: Carbon steel (mm)

Bore size/ø20, ø25, ø32

CDP-1

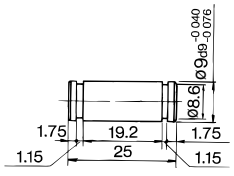

Retaining ring: Type C9 for axis

Bore size/ø40

CDP-3

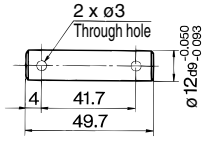

Cotter pin
ø3 x 18ℓ

∗ Retaining rings (cotter pins for ø40) are attached.

Rod End Nut (mm)

Material: Carbon steel

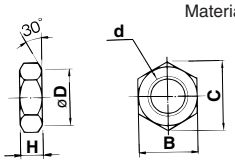

Part no.	Applicable bore size	B	C	D	d	H
NT-02	**20**	13	15.0	12.5	M8 x 1.25	5
NT-03	**25, 32**	17	19.6	16.5	M10 x 1.25	6
NT-04	**40**	22	25.4	21.0	M14 x 1.5	8

Mounting Nut (mm)

Material: Carbon steel

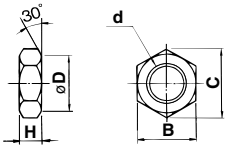

Part no.	Applicable bore size	B	C	D	d	H
SN-020B	**20**	26	30	25.5	M20 x 1.5	8
SN-032B	**25, 32**	32	37	31.5	M26 x 1.5	8
SN-040B	**40**	41	47.3	40.5	M32 x 2.0	10

Trunnion Nut (mm)

Material: Carbon steel

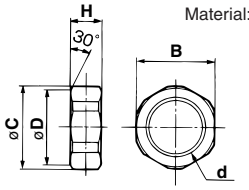

Part no.	Applicable bore size	B	C	D	d	H
TN-020B	**20**	26	28	25.5	M20 x 1.5	10
TN-032B	**25, 32**	32	34	31.5	M26 x 1.5	10
TN-040B	**40**	41	45	40.5	M32 x 2	10

Clevis Pivot Bracket (For CLM2E) (mm)

Material: Rolled steel plate

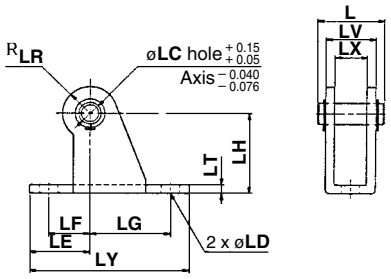

Part no.	Applicable bore size	L	LC	LD	LE	LF	LG	LH	LR	LT	LX	LY	LV	Applicable pin part no.
CM-E020B	**20, 25**	24.5	8	6.8	22	15	30	30	10	3.2	12	59	18.4	CD-S02
CM-E032B	**32, 40**	34	10	9	25	15	40	40	13	4	20	75	28	CD-S03

Note 1) Clevis pins and retaining rings (cotter pins for ø40) are attached.
Note 2) It cannot be used for single clevis style (CM2C) and double clevis style (CM2D).

Clevis Pin (For CLM2E) (mm)

Material: Carbon steel

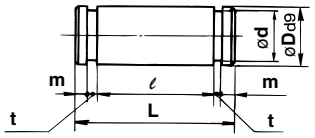

Part no.	Applicable bore size	D_{d9}	d	L	ℓ	m	t	Applicable retaining ring part no.
CD-S02	**20, 25**	$8^{-0.040}_{-0.076}$	7.6	24.5	19.5	1.6	0.9	Type C 8 for axis
CD-S03	**32, 40**	$10^{-0.040}_{-0.076}$	9.6	34	29	1.35	1.15	Type C 10 for axis

Note) Retaining rings are attached.

Regarding mounting bracket, accessory made of stainless steel (Some are not available.), refer to page 1864 for -XB12, External stainless steel cylinder.

Single Clevis

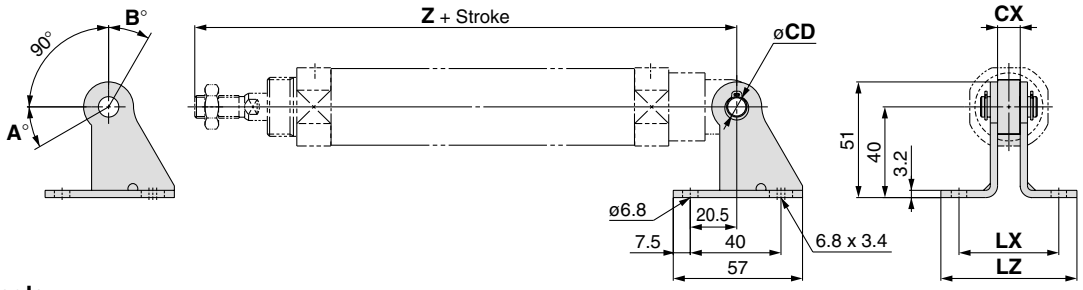

Rotation Angle

Bore size (mm)	A°	B°	A° + B° + 90°
20	25	85	200
25, 32	21	81	192
40	26	86	202

(mm)

Mounting	Part no.	Applicable bore size	CX	Z + Stroke	CD	LX	LZ
CLM2C (Single clevis style)	CM-B032	**20**	10	198	9	44	60
		25		212			
		32		214			
	CM-B040	**40**	15	256	10	49	65

Note) Pivot brackets do not come with pivot bracket pins and retaining rings.

Head Side Trunnion

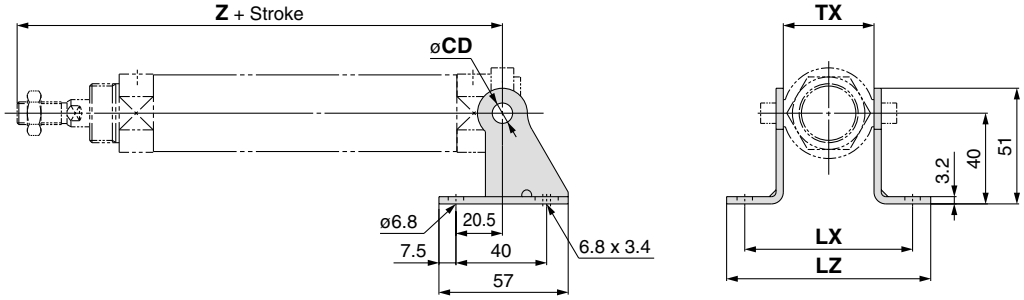

(mm)

Mounting	Part no.	Applicable bore size	TX	Head side trunnion Z + Stroke	CD	LX	LZ
CLM2T (Head side trunnion)	CM-B020	**20**	32	173	8	66	82
	CM-B032	**25**	40	187	9	74	90
		32		189			
	CM-B040	**40**	53	222.5	10	87	103

Note) Pivot brackets do not come with pivot bracket pins and retaining rings.

Pivot Bracket

∗ 2 brackets per set

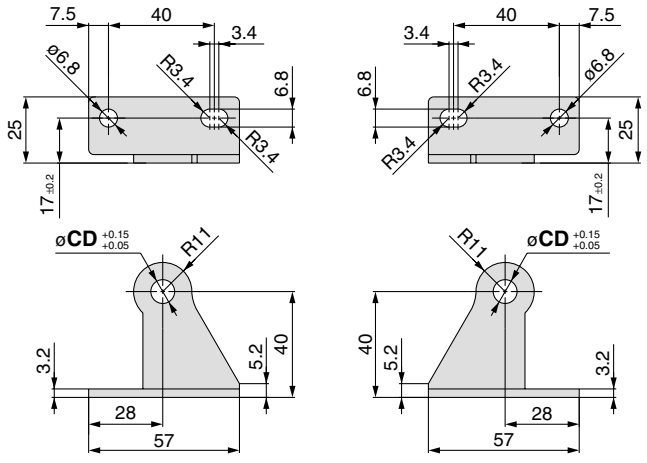

(mm)

Part no.	CD
CM-B020 (2)	8
CM-B032	9
CM-B040	10

Note 1) Pivot brackets do not come with pivot bracket pins and retaining rings.
Note 2) Only for trunnion type

Pivot Bracket Pin (For CM2C)

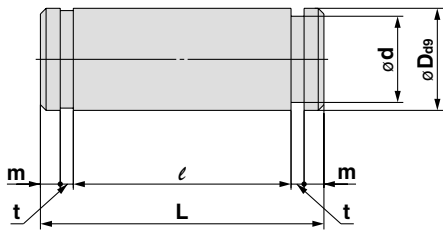

(mm)

Applicable bore size	Part no.	D_{d9}	d	L	ℓ	m	t	Applicable retaining ring part no.
20 to 32	CDP-1	$9^{-0.040}_{-0.076}$	8.6	25	19.2	1.75	1.15	Type C 9 for axis
40	CD-S03	$10^{-0.040}_{-0.076}$	9.6	34	29	1.75	1.15	Type C 10 for axis

Note) Pivot bracket pins come with retaining rings.

Auto Switch Proper Mounting Position (Detection at Stroke End) and Its Mounting Height

Reed auto switch

D-A9□

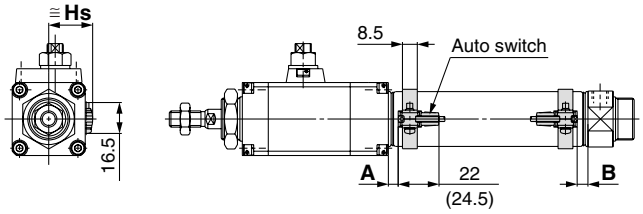

( ): For D-A93

D-C7/C8

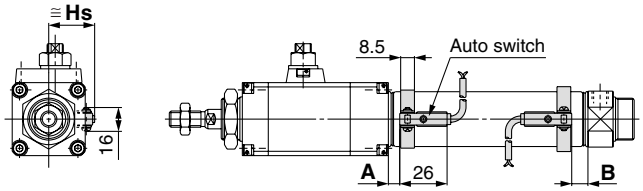

D-B5/B6/B59W

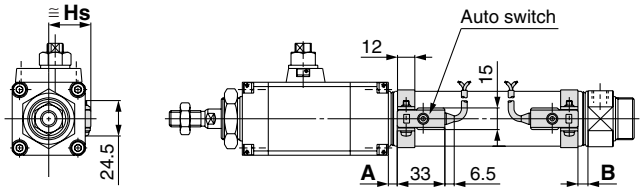

D-A33A/A34A

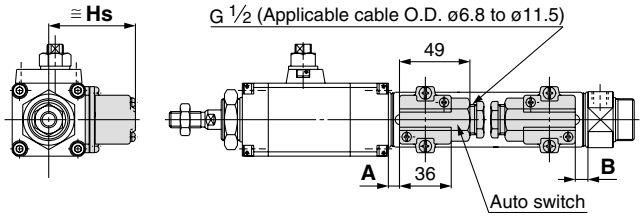

D-A44A

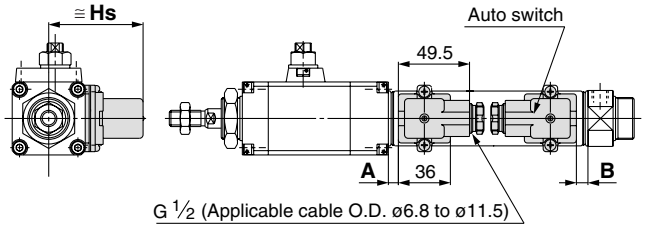

D-C73C/C80C

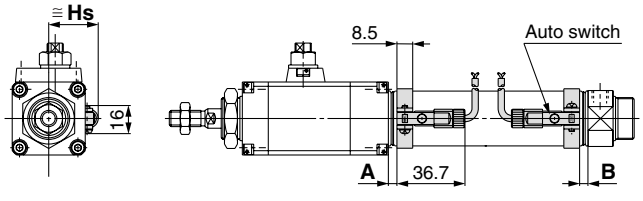

Solid state auto switch

D-M9□
D-M9□W

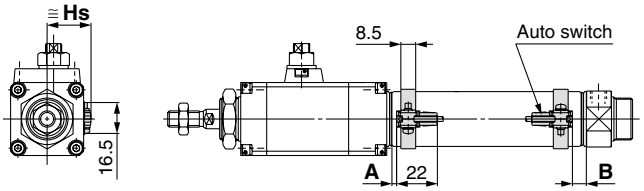

D-H7□/H7□W/H7NF/H7BAL

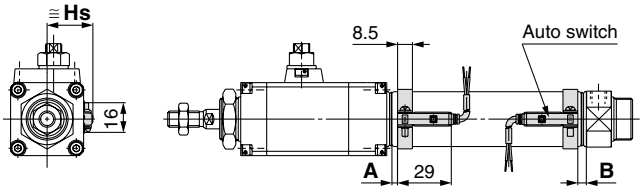

D-G5NTL

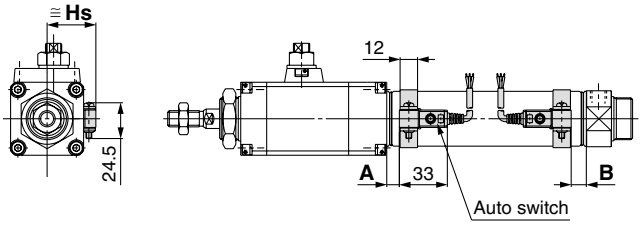

D-G39A/K39A

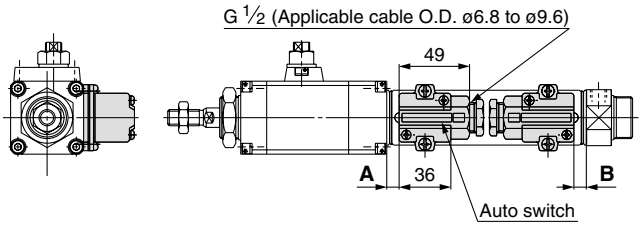

D-H7C

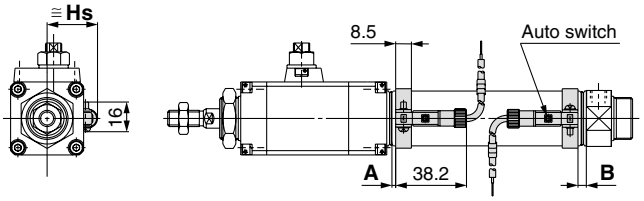

CLJ2
CLM2
CLG1
CL1
MLGC
CNG
MNB
CNA
CNS
CLS
CLQ
RLQ
MLU
MLGP
ML1C

D-□
-X□
Individual -X□

Auto Switch Proper Mounting Position (Detection at Stroke End) and Its Mounting Height

Auto Switch Proper Mounting Position

(mm)

Auto switch model / Bore size (mm)	D-A9□		D-M9□ D-M9□W		D-B5□ D-B64		D-C7□ D-C80 D-C73C D-C80C		D-B59W		D-A3□A D-G39A D-K39A D-A44A		D-H7□ D-H7C D-H7□W D-H7BAL D-H7NF		D-G5NTL	
	A	B	A	B	A	B	A	B	A	B	A	B	A	B	A	B
20	6.5	5.5	10.5	9.5	1	0	7	6	4	3	0.5	0	6	5	2.5	1.5
25	6.5	5.5	10.5	9.5	1	0	7	6	4	3	0.5	0	6	5	2.5	1.5
32	7.5	6.5	11.5	10.5	2	1	8	7	5	4	1.5	0.5	7	6	3.5	2.5
40	13.5	11.5	17.5	15.5	7	6	13	12	10	9	6.5	5.5	12	11	8.5	7.5

Note) Adjust the auto switch after confirming the operating conditions in the actual setting.

Auto Switch Mounting Height

(mm)

Auto switch model / Bore size (mm)	D-A9□ D-M9□ D-M9□W	D-B5□ D-B64 D-B59W D-G5NTL D-H7C	D-C7□ D-C80 D-H7□ D-H7□W D-H7BAL D-H7NF	D-C73C D-C80C	D-A3□A D-G39A D-K39A	D-A44A
	Hs	Hs	Hs	Hs	Hs	Hs
20	22	25.5	22.5	25	60	69.5
25	24.5	28	25	27.5	62.5	72
32	28	31.5	28.5	31	66	75.5
40	32	35.5	32.5	35	70	79.5

Minimum Auto Switch Mounting Stroke

n: No. of auto switches (mm)

Auto switch model	No. of auto switches mounted				
	1	2		n	
		Different surfaces	Same surface	Different surfaces	Same surface
D-A9□ D-M9□ D-M9□W	10	15 Note 1)	45 Note 1)	$15 + 45\frac{(n-2)}{2}$ (n = 2, 4, 6···)	45 + 45 (n – 2)
D-C7□ D-C80	10	15	50	$15 + 45\frac{(n-2)}{2}$ (n = 2, 4, 6···)	50 + 45 (n – 2)
D-H7□ D-H7□W D-H7BAL/H7NF	10	15	60	$15 + 45\frac{(n-2)}{2}$ (n = 2, 4, 6···)	60 + 45 (n – 2)
D-C73C D-C80C D-H7C	10	15	65	$15 + 50\frac{(n-2)}{2}$ (n = 2, 4, 6···)	65 + 50 (n – 2)
D-B5□/B64 D-G5NTL	10	15	75	$15 + 50\frac{(n-2)}{2}$ (n = 2, 4, 6···)	75 + 55 (n – 2)
D-B59W	15	20	75	$20 + 50\frac{(n-2)}{2}$ (n = 2, 4, 6···)	75 + 55 (n – 2)
D-A3□A/G39A D-K39A/A44A	10	35	100	35 + 30 (n – 2)	100 + 100 (n – 2)

Note 1) Auto switch mounting (The adjustment as shown in the figures below is required with the following stroke ranges.)

Auto switch model	With 2 auto switches	
	Different surfaces Note 1)	Same surface Note 1)
	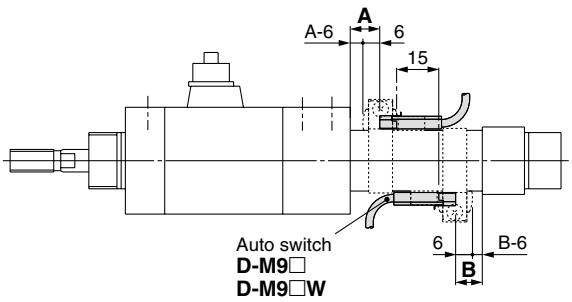 The proper auto switch mounting position is 6 mm inward from the switch holder edge.	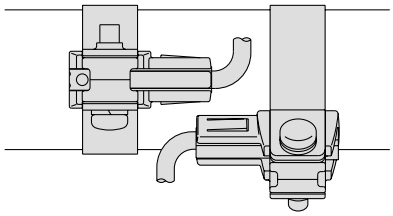 The auto switch is mounted by slightly displacing it in a direction (cylinder tube circumferential exterior) so that the auto switch and lead wire do not interfere with each other.
D-A93	—	45 to less than 50 stroke
D-M9□ D-M9□W	15 to less than 20 stroke	45 to less than 55 stroke

Operating Range

(mm)

Auto switch model	Bore size (mm)			
	20	**25**	**32**	**40**
D-A9□	6	6	6	6
D-M9□ D-M9□W	3.5	3	3.5	3
D-C7□/C80 D-C73C/C80C	7	8	8	8
D-B5□/B64 D-A3□A/A44A	8	8	9	9
D-B59W	12	12	13	13
D-H7□/H7□W/H7BAL D-G5NTL/H7NF	4	4	4.5	5
D-H7C	7	8.5	9	10
D-G39A/K39A	8	9	9	9

* Since the operating range is provided as a guideline including hysteresis, it cannot be guaranteed (assuming approximately ±30% dispersion). It may vary substantially depending on an ambient environment.

Auto Switch Mounting Bracket: Part No.

Auto switch model	Bore size (mm)			
	ø20	ø25	ø32	ø40
D-A9□ D-M9□ D-M9□W	① BM2-020 (1) ② BJ3-1	① BM2-025 (1) ② BJ3-1	① BM2-032 (1) ② BJ3-1	① BM2-040 (1) ② BJ3-1
D-C7□/C80 D-C73C/C80C D-H7□ D-H7□W D-H7BAL D-H7NF	BM2-020	BM2-025	BM2-032	BM2-040
D-B5□/B64 D-B59W D-G5NTL D-G5NBL	BA2-020	BA2-025	BA2-032	BA2-040
D-A3□A/A44A D-G39A/K39A	BM3-020	BM3-025	BM3-032	BM3-040

Note 1) Two kinds of auto switch mounting brackets are used as a set.

[Mounting screw set made of stainless steel]

The following set of mounting screws made of stainless steel is available. Use it in accordance with the operating environment. (Please order the auto switch mounting bracket separately, since it is not included.)

BBA4: For D-C7/C8/H7 types

Note 2) Refer to page 1814 for the details of BBA4.

D-H7BAL auto switch is set on the cylinder with the stainless steel screws above when shipped. When an auto switch is shipped independently, BBA4 is attached.

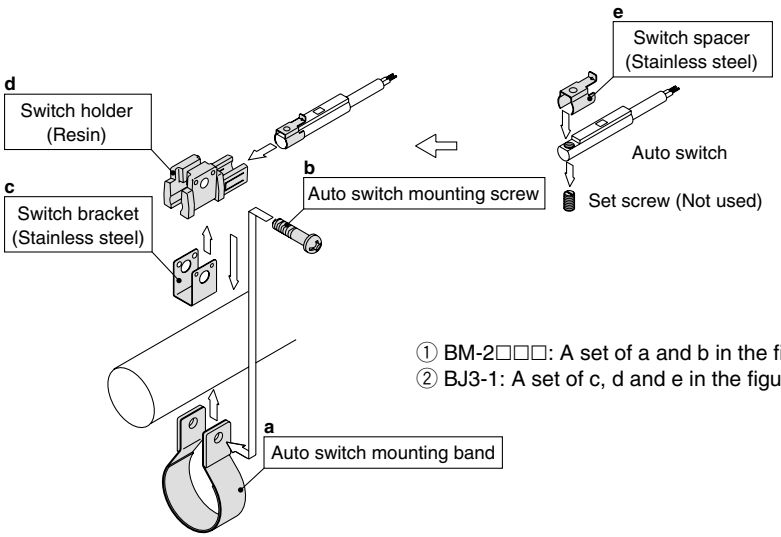

Besides the models listed in How to Order, the following auto switches are applicable.
Refer to pages 1719 to 1827 for the detailed specifications.

Auto switch type	Part no.	Electrical entry (Fetching direction)	Features
Reed	D-B53, C73, C76	Grommet (In-line)	—
	D-C80		Without indicator light
Solid state	D-H7A1, H7A2, H7B		—
	D-H7NW, H7PW, H7BW		Diagnostic indication (2-color)
	D-G5NTL		With timer

∗ For solid state auto switches, auto switches with a pre-wired connector are also available. Refer to pages 1784 and 1785 for details.
∗ Normally closed (NC = b contact) solid state auto switches (D-F9G/F9H types) are also available. Refer to page 1746 for details.
∗ Wide range detection type, solid state auto switches (D-G5NBL type) are also available. Refer to page 1776 for details.

Low Speed Cylinder
Double Acting, Single Rod
Series CM2X
ø20, ø25, ø32, ø40

How to Order

Mounting style

B	Basic style
L	Axial foot style
F	Rod side flange style
G	Head side flange style
C	Single clevis style
D	Double clevis style
U	Rod side trunnion style

T	Head side trunnion style
E	Clevis integrated style
BZ	Boss-cut basic style
FZ	Boss-cut rod side flange style
UZ	Boss-cut rod side trunnion style

Cylinder stroke (mm)
Refer to "Standard Stroke" on page 1149.

CM2X L 40 □ – 150

With auto switch **CDM2X L 40 □ – 150 – M9BW □**

With auto switch
(Built-in magnet)

Low speed cylinder

Bore size

20	20 mm
25	25 mm
32	32 mm
40	40 mm

Thread type

Nil	Rc
TN	NPT
TF	G

Auto switch

Nil	Without auto switch

∗ For the applicable auto switch model, refer to the table below.

Number of auto switches

Nil	2 pcs.
S	1 pc.
n	n pcs.

Built-in Magnet Cylinder Model

If a built-in magnet cylinder without an auto switch is required, there is no need to enter the symbol for the auto switch.
(Example) CDM2XF32-100

Applicable Auto Switch/Refer to pages 1719 to 1827 for further information on auto switches.

Type	Special function	Electrical entry	Indicator light	Wiring (Output)	Load voltage DC	Load voltage AC	Auto switch model	Lead wire (m) 0.5 (Nil)	1 (M)	3 (L)	5 (Z)	None (N)	Pre-wired connector	Applicable load	
Solid state switch	——	Grommet	Yes	3-wire (NPN)	5 V, 12 V	—	**M9N**	●	●	●	○	—	○	IC circuit	Relay, PLC
				3-wire (PNP)			**M9P**	●	●	●	○	—	○		
				2-wire	12 V		**M9B**	●	●	●	○	—	○	—	
		Connector					**H7C**	●	—	●	●	●	—		
		Terminal conduit		3-wire (NPN)	5 V, 12 V		**G39A**	—	—	—	—	●	—	IC circuit	
				2-wire	12 V		**K39A**	—	—	—	—	●	—	—	
	Diagnostic indication (2-color)	Grommet		3-wire (NPN)	5 V, 12 V		**M9NW**	●	●	●	○	—	○	IC circuit	
				3-wire (PNP)			**M9PW**	●	●	●	○	—	○		
				2-wire	12 V		**M9BW**	●	●	●	○	—	○	—	
	With diagnostic output (2-color)			4-wire (NPN)	5 V, 12 V		**H7NF**	●		●	○	—	○	IC circuit	
Reed switch	——	Grommet	Yes	3-wire (Equiv. NPN)	—	5 V	—	**A96**	●	—	●	—	—	—	IC circuit	—
			Yes	2-wire	24 V	12 V	100 V	**A93**	●	—	●	—	—	—	—	Relay, PLC
			No				100 V or less	**A90**	●	—	●	—	—	—	IC circuit	
			Yes				100 V, 200 V	**B54**	●	—	●	●	—	—	—	
			No				200 V or less	**B64**	●	—	●	—	—	—		
		Connector	Yes				—	**C73C**	●	—	●	●	●	—		
			No				24 V or less	**C80C**	●	—	●	●	●	—	IC circuit	
		Terminal conduit	Yes				—	**A33A**	—	—	—	—	●	—	—	PLC
							100 V, 200 V	**A34A**	—	—	—	—	●	—		Relay, PLC
		DIN terminal						**A44A**	—	—	—	—	●	—		
	Diagnostic indication (2-color)	Grommet				—	—	**B59W**	●	—	●	—	—	—		

∗ Lead wire length symbols: 0.5 m ····· Nil (Example) M9NW
1 m ····· M (Example) M9NWM
3 m ····· L (Example) M9NWL
5 m ····· Z (Example) M9NWZ
None ····· N (Example) H7CN

∗ Solid state auto switches marked with "○" are produced upon receipt of order.
∗ D-A9□V□/M9□V□/M9□WV□/M9□A(V)L types cannot be mounted.
∗ Do not add the suffix (N) indicating "no lead wire" to the part numbers of models D-A3□A, A44A, G39A and K39A.

∗ In addition to the models in the above table, there are some other auto switches that are applicable. For more information, refer to page 1161.
∗ Refer to pages 1784 and 1785 for details of auto switches with a pre-wired connector.
∗ D-A9□/M9□/M9□W auto switches are shipped together (not assembled). (Only auto switch mounting brackets are assembled before shipped.)



JIS Symbol
Double acting
Single rod

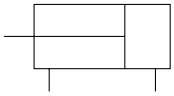

Standard Stroke

Bore size (mm)	Standard stroke (mm)
20	25, 50, 75, 100, 125, 150 200, 250, 300
25	
32	
40	

∗ Manufacture of intermediate strokes at 1 mm intervals is possible. (Spacers are not used.)

⚠ Precautions

Be sure to read before handling. Refer to front matters 42 and 43 for Safety Instructions and pages 3 to 11 for Actuator and Auto Switch Precautions.

Operating Precautions

⚠Warning

1. Do not rotate the cover.
- When installing a cylinder or screwing a pipe fitting into the port, the coupling portion of the cover could break if the cover rotated.

⚠Caution

1. Be careful of the retaining ring to pop out.
- When replacing the rod seal, take care that the retaining ring does not spring out while you are removing it.

Maintenance

⚠Caution

1. Replacement parts/Seal kit
Order it in accordance with the bore size.

Bore size (mm)	Kit no.	Contents
20	CM2X20-PS	Rod seal: 1 pc. Grease pack (10 g): 1 pc.
25	CM2X25-PS	
32	CM2X32-PS	
40	CM2X40-PS	

2. Grease pack
When maintenance requires only grease, use the following part numbers to order.
Grease pack part no.:
GR-L-005 (5 g)
GR-L-010 (10 g)
GR-L-150 (150 g)

Specifications

Bore size (mm)	20	25	32	40
Type	Pneumatic			
Action	Double acting, Single rod			
Fluid	Air			
Proof pressure	1.5 MPa			
Maximum operating pressure	1.0 MPa			
Minimum operating pressure	0.025 MPa			
Ambient and fluid temperature	Without auto switch: –10 to 70°C (No freezing) With auto switch: –10 to 60°C (No freezing)			
Cushion	Rubber bumper			
Lubrication	Not required (Non-lube)			
Stroke length tolerance	$^{+1.4\ mm}_{0}$			

Piston Speed

Bore size (mm)	20	25	32	40
Piston speed (mm/s)	0.5 to 300			
Allowable kinetic energy (J)	0.27	0.4	0.65	1.2

Mounting Bracket Part No.

Mounting bracket	Minimum order	Bore size (mm) 20	25	32	40	Description (when ordering a minimum number)
Axial foot∗	2	CM-L020B	CM-L032B		CM-L040B	Foot 2 pcs., Mounting nut 1 pc.
Flange	1	CM-F020B	CM-F032B		CM-F040B	Flange 1 pc., Mounting nut 1 pc.
Single clevis∗∗	1	CM-C020B	CM-C032B		CM-C040B	Single clevis 1 pc., Liner 3 pcs.
Double clevis (with pin)∗∗∗	1	CM-D020B	CM-D032B		CM-D040B	Double clevis 1 pc., Liner 3 pcs., Clevis pin 1 pc., Retaining ring 2 pcs.
Trunnion (with nut)	1	CM-T020B	CM-T032B		CM-T040B	Trunnion 1 pc., Trunnion nut 1 pc.

∗ When ordering foot brackets, order 2 pieces per cylinder unit.
∗∗ Three liners are included in the clevis bracket for adjusting an angle when mounting it.
∗∗∗ Clevis pin and retaining ring (cotter pin for ø40) are shipped together.

Mounting Style and Accessory

Mounting \ Accessory	Standard equipment: Mounting nut	Rod end nut	Clevis pin	Option: Single knuckle joint	Double (3) knuckle joint	Clevis (4) bracket
Basic style	● (1 pc.)	●	—	●	●	—
Axial foot style	● (2)	●	—	●	●	—
Rod side flange style	● (1)	●	—	●	●	—
Head side flange style	● (1)	●	—	●	●	—
Clevis integrated style	— Note 1)	●	—	●	●	●
Single clevis style	— Note 1)	●	—	●	●	—
Double clevis style (3)	— Note 1)	●	● Note 5)	●	●	—
Rod side trunnion style	● (1) Note 2)	●	—	●	●	—
Head side trunnion style	● (1) Note 2)	●	—	●	●	—
Boss-cut basic style	● (1)	●	—	●	●	—
Boss-cut flange style	● (1)	●	—	●	●	—
Boss-cut trunnion style	● (1)	●	—	●	●	—

Note 1) Mounting nut is not equipped with clevis integrated style, single clevis style and double clevis style.
Note 2) Trunnion nuts are attached for rod side trunnion and head side trunnion styles.
Note 3) Pin and retaining ring are shipped together with double clevis and double knuckle joint. (ø40 is cotter pin.)
Note 4) Pins and retaining rings are packed with clevis brackets.
Note 5) Retaining rings (cotter pins for ø40) are included in the clevis pins.

Basic Style (B)

CM2XB **Bore size** — **Stroke**

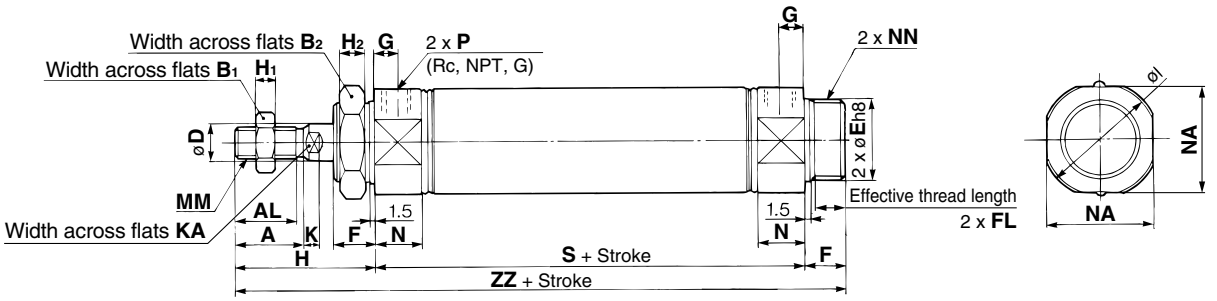

Boss-cut style

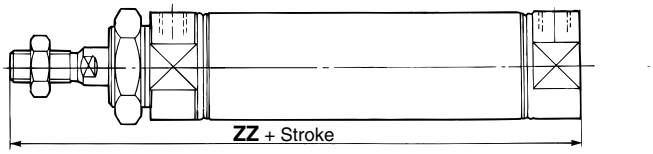

(mm)

Bore size (mm)	A	AL	B_1	B_2	D	E	F	FL	G	H	H_1	H_2	I	K	KA	MM	N	NA	NN	P	S	ZZ
20	18	15.5	13	26	8	$20^{0}_{-0.033}$	13	10.5	8	41	5	8	28	5	6	M8 x 1.25	15	24	M20 x 1.5	1/8	62	116
25	22	19.5	17	32	10	$26^{0}_{-0.033}$	13	10.5	8	45	6	8	33.5	5.5	8	M10 x 1.25	15	30	M26 x 1.5	1/8	62	120
32	22	19.5	17	32	12	$26^{0}_{-0.033}$	13	10.5	8	45	6	8	37.5	5.5	10	M10 x 1.25	15	34.5	M26 x 1.5	1/8	64	122
40	24	21	22	41	14	$32^{0}_{-0.039}$	16	13.5	11	50	8	10	46.5	7	12	M14 x 1.5	21.5	42.5	M32 x 2	1/4	88	154

Boss-cut Style (mm)

Bore size (mm)	ZZ
20	103
25	107
32	109
40	138

Axial Foot Style (L)

CM2XL **Bore size** — **Stroke**

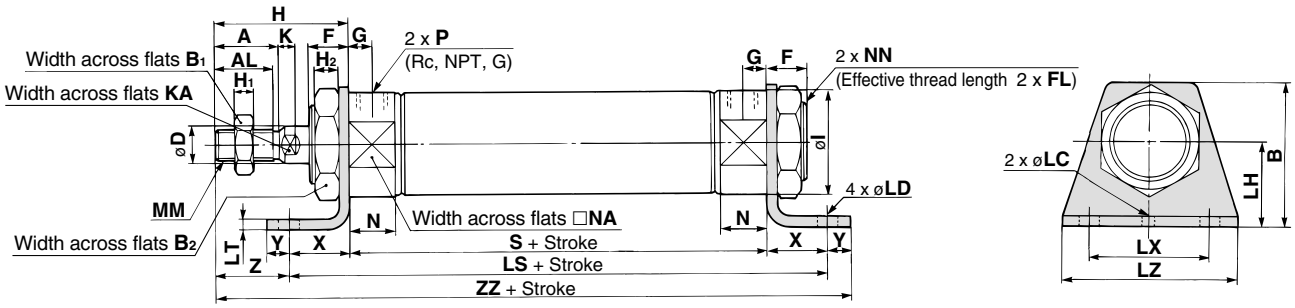

(mm)

Bore size (mm)	A	AL	B	B_1	B_2	D	F	FL	G	H	H_1	H_2	I	K	KA	LC	LD	LH	LS	LT	LX	LZ	MM	N	NA	NN	P	S	X	Y	Z	ZZ
20	18	15.5	40	13	26	8	13	10.5	8	41	5	8	28	5	6	4	6.8	25	102	3.2	40	55	M8 x 1.25	15	24	M20 x 1.5	1/8	62	20	8	21	131
25	22	19.5	47	17	32	10	13	10.5	8	45	6	8	33.5	5.5	8	4	6.8	28	102	3.2	40	55	M10 x 1.25	15	30	M26 x 1.5	1/8	62	20	8	25	135
32	22	19.5	47	17	32	12	13	10.5	8	45	6	8	37.5	5.5	10	4	6.8	28	104	3.2	40	55	M10 x 1.25	15	34.5	M26 x 1.5	1/8	64	20	8	25	137
40	24	21	54	22	41	14	16	13.5	11	50	8	10	46.5	7	12	4	7	30	134	3.2	55	75	M14 x 1.5	21.5	42.5	M32 x 2	1/4	88	23	10	27	171

Rod Side Flange Style (F)

CM2XF **Bore size** — **Stroke** □

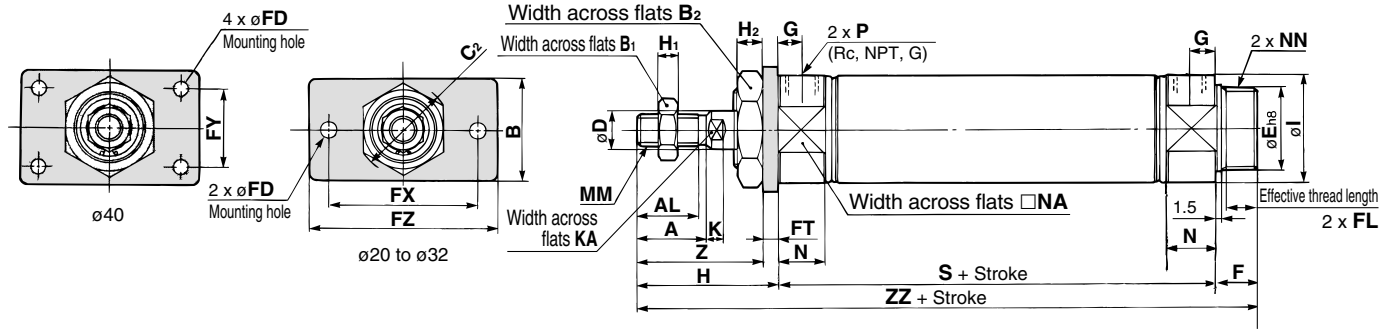

Boss-cut style

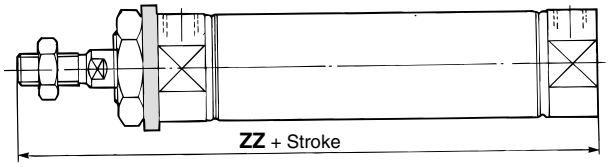

(mm)

Bore size (mm)	A	AL	B	B_1	B_2	C_2	D	E	F	FL	FD	FT	FX	FY	FZ	G	H	H_1	H_2	I	K	KA	MM	N	NA	NN	P	S	Z	ZZ
20	18	15.5	34	13	26	30	8	$20^{0}_{-0.033}$	13	10.5	7	4	60	—	75	8	41	5	8	28	5	6	M8 x 1.25	15	24	M20 x 1.5	1/8	62	37	116
25	22	19.5	40	17	32	37	10	$26^{0}_{-0.033}$	13	10.5	7	4	60	—	75	8	45	6	8	33.5	5.5	8	M10 x 1.25	15	30	M26 x 1.5	1/8	62	41	120
32	22	19.5	40	17	32	37	12	$26^{0}_{-0.033}$	13	10.5	7	4	60	—	75	8	45	6	8	37.5	5.5	10	M10 x 1.25	15	34.5	M26 x 1.5	1/8	64	41	122
40	24	21	52	22	41	47.3	14	$32^{0}_{-0.039}$	16	13.5	7	5	66	36	82	11	50	8	10	46.5	7	12	M14 x 1.5	21.5	42.5	M32 x 2	1/4	88	45	154

Boss-cut Style (mm)

Bore size (mm)	ZZ
20	103
25	107
32	109
40	138

Head Side Flange Style (G)

CM2XG **Bore size** — **Stroke** □

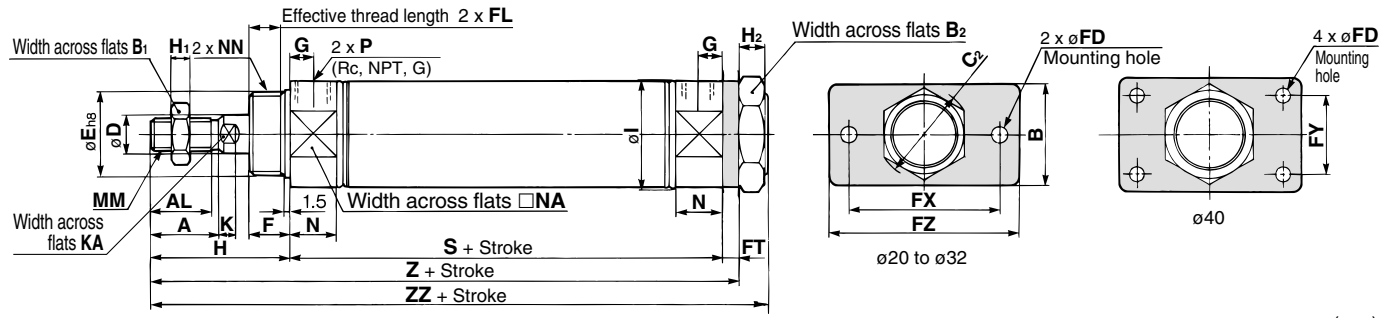

(mm)

Bore size (mm)	A	AL	B	B_1	B_2	C_2	D	E	F	FL	FD	FT	FX	FY	FZ	G	H	H_1	H_2	I
20	18	15.5	34	13	26	30	8	$20^{0}_{-0.033}$	13	10.5	7	4	60	—	75	8	41	5	8	28
25	22	19.5	40	17	32	37	10	$26^{0}_{-0.033}$	13	10.5	7	4	60	—	75	8	45	6	8	33.5
32	22	19.5	40	17	32	37	12	$26^{0}_{-0.033}$	13	10.5	7	4	60	—	75	8	45	6	8	37.5
40	24	21	52	22	41	47.3	14	$32^{0}_{-0.039}$	16	13.5	7	5	66	36	82	11	50	8	10	46.5

Bore size (mm)	K	KA	MM	N	NA	NN	P	S	Z	ZZ
20	5	6	M8 x 1.25	15	24	M20 x 1.5	1/8	62	107	116
25	5.5	8	M10 x 1.25	15	30	M26 x 1.5	1/8	62	111	120
32	5.5	10	M10 x 1.25	15	34.5	M26 x 1.5	1/8	64	113	122
40	7	12	M14 x 1.5	21.5	42.5	M32 x 2	1/4	88	143	154

Single Clevis Style (C)

CM2XC **Bore size** — **Stroke** □

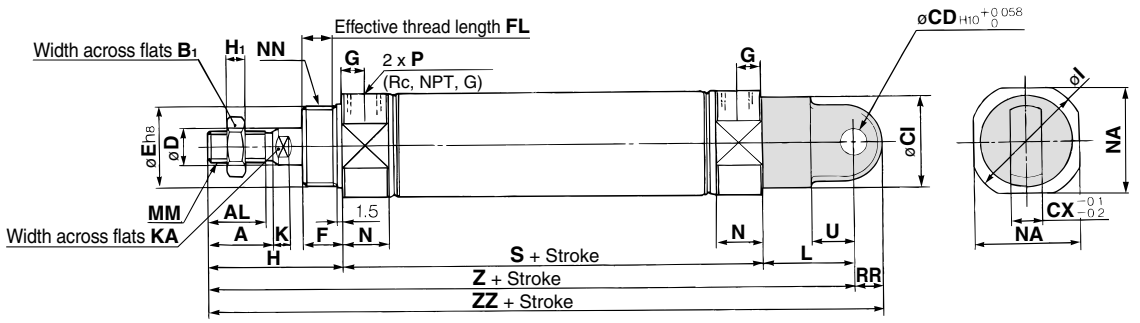

(mm)

Bore size (mm)	A	AL	B_1	CI	CD	CX	D	E	F	FL	G	H	H_1	I	K	KA	L	MM	N	NA	NN	P	RR	S	U	Z	ZZ
20	18	15.5	13	24	9	10	8	$20^{0}_{-0.033}$	13	10.5	8	41	5	28	5	6	30	M8 x 1.25	15	24	M20 x 1.5	1/8	9	62	14	133	142
25	22	19.5	17	30	9	10	10	$26^{0}_{-0.033}$	13	10.5	8	45	6	33.5	5.5	8	30	M10 x 1.25	15	30	M26 x 1.5	1/8	9	62	14	137	146
32	22	19.5	17	30	9	10	12	$26^{0}_{-0.033}$	13	10.5	8	45	6	37.5	5.5	10	30	M10 x 1.25	15	34.5	M26 x 1.5	1/8	9	64	14	139	148
40	24	21	22	38	10	15	14	$32^{0}_{-0.039}$	16	13.5	11	50	8	46.5	7	12	39	M14 x 1.5	21.5	42.5	M32 x 2	1/4	11	88	18	177	188

Double Clevis Style (D)

CM2XD **Bore size** — **Stroke** □

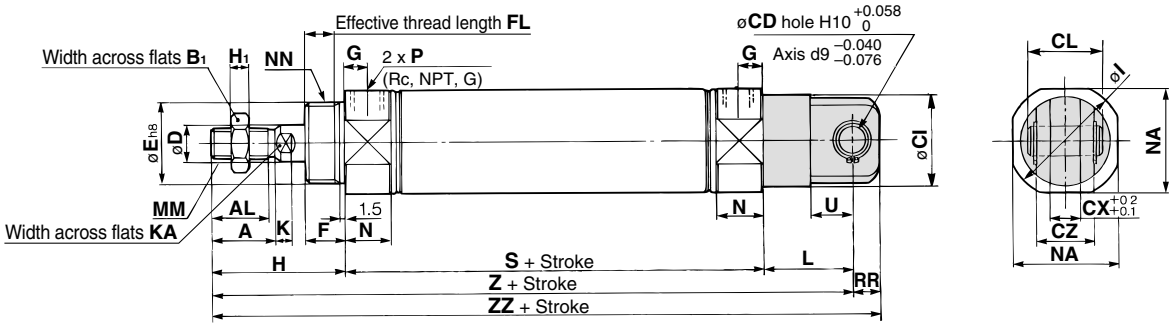

(mm)

Bore size (mm)	A	AL	B_1	CD	CI	CL	CX	CZ	D	E	F	FL	G	H	H_1	I	K	KA	L	MM	N	NA	NN	P	RR	S	U	Z	ZZ
20	18	15.5	13	9	24	25	10	19	8	$20^{0}_{-0.033}$	13	10.5	8	41	5	28	5	6	30	M8 x 1.25	15	24	M20 x 1.5	1/8	9	62	14	133	142
25	22	19.5	17	9	30	25	10	19	10	$26^{0}_{-0.033}$	13	10.5	8	45	6	33.5	5.5	8	30	M10 x 1.25	15	30	M26 x 1.5	1/8	9	62	14	137	146
32	22	19.5	17	9	30	25	10	19	12	$26^{0}_{-0.033}$	13	10.5	8	45	6	37.5	5.5	10	30	M10 x 1.25	15	34.5	M26 x 1.5	1/8	9	64	14	139	148
40	24	21	22	10	38	41.2	15	30	14	$32^{0}_{-0.039}$	16	13.5	11	50	8	46.5	7	12	39	M14 x 1.5	21.5	42.5	M32 x 2	1/4	11	88	18	177	188

∗ Clevis pin and retaining ring (cotter pin for bore size ø40) are shipped together.

Rod Side Trunnion Style (U)

CM2XU **Bore size** — **Stroke** ☐

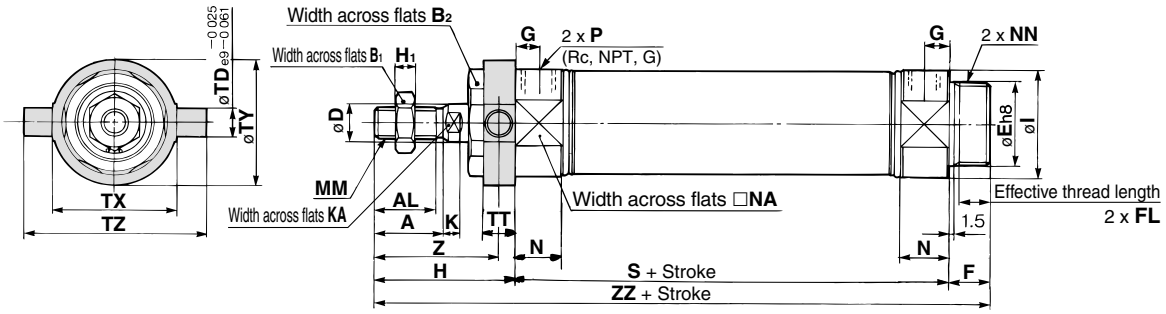

Boss-cut style

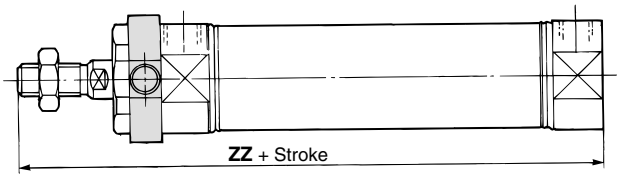

(mm)

Bore size (mm)	A	AL	B_1	B_2	D	E	F	FL	G	H	H_1	I	K	KA	MM	N	NA	NN	P
20	18	15.5	13	26	8	$20^{\ 0}_{-0.033}$	13	10.5	8	41	5	28	5	6	M8 x 1.25	15	24	M20 x 1.5	1/8
25	22	19.5	17	32	10	$26^{\ 0}_{-0.033}$	13	10.5	8	45	6	33.5	5.5	8	M10 x 1.25	15	30	M26 x 1.5	1/8
32	22	19.5	17	32	12	$26^{\ 0}_{-0.033}$	13	10.5	8	45	6	37.5	5.5	10	M10 x 1.25	15	34.5	M26 x 1.5	1/8
40	24	21	22	41	14	$32^{\ 0}_{-0.039}$	16	13.5	11	50	8	46.5	7	12	M14 x 1.5	21.5	42.5	M32 x 2	1/4

(mm)

Bore size (mm)	S	TD	TT	TX	TY	TZ	Z	ZZ
20	62	8	10	32	32	52	36	116
25	62	9	10	40	40	60	40	120
32	64	9	10	40	40	60	40	122
40	88	10	11	53	53	77	44.5	154

Boss-cut Style (mm)

Bore size (mm)	ZZ
20	103
25	107
32	109
40	138

REA
REB
REC
C□Y
C□X
MQ
RHC
RZQ
D-□
-X□
Individual -X□

Head Side Trunnion Style (T)

CM2XT | **Bore size** | **—** | **Stroke** | |

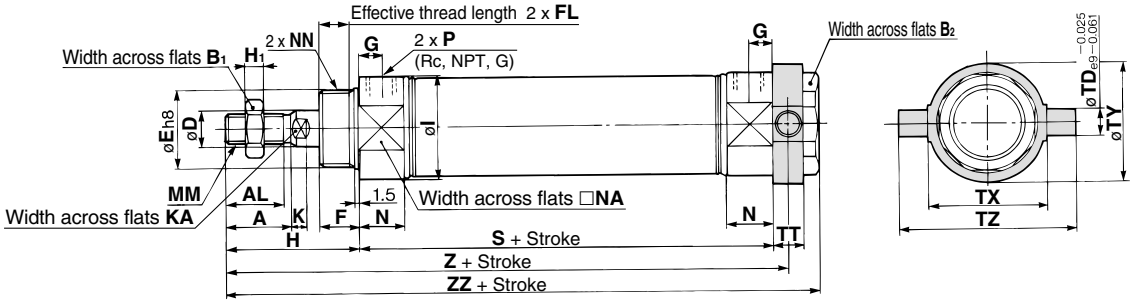

(mm)

Bore size (mm)	A	AL	B_1	B_2	D	E	F	FL	G	H	H_1	I	K	KA	MM	N	NA	NN	P
20	18	15.5	13	26	8	$20^{0}_{-0.033}$	13	10.5	8	41	5	28	5	6	M8 x 1.25	15	24	M20 x 1.5	1/8
25	22	19.5	17	32	10	$26^{0}_{-0.033}$	13	10.5	8	45	6	33.5	5.5	8	M10 x 1.25	15	30	M26 x 1.5	1/8
32	22	19.5	17	32	12	$26^{0}_{-0.033}$	13	10.5	8	45	6	37.5	5.5	10	M10 x 1.25	15	34.5	M26 x 1.5	1/8
40	24	21	22	41	14	$32^{0}_{-0.039}$	16	13.5	11	50	8	46.5	7	12	M14 x 1.5	21.5	42.5	M32 x 2	1/4

(mm)

Bore size (mm)	S	TD	TT	TX	TY	TZ	Z	ZZ
20	62	8	10	32	32	52	108	118
25	62	9	10	40	40	60	112	122
32	64	9	10	40	40	60	114	124
40	88	10	11	53	53	77	143.5	154

Clevis Integrated Style (E)

CM2XE **Bore size** — **Stroke** ☐

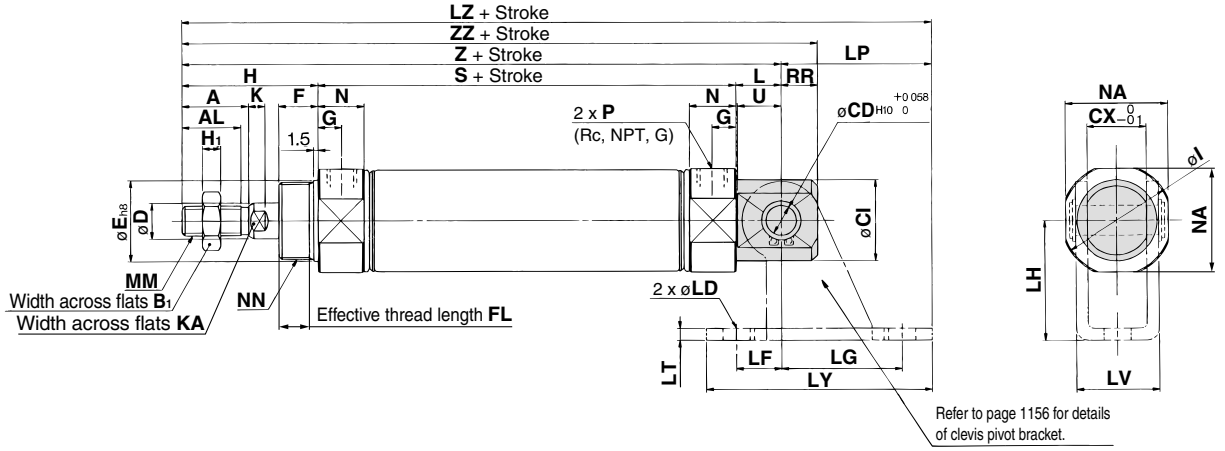

(mm)

Bore size (mm)	A	AL	B_1	CD	CI	CX	D	E	F	FL	G	H	H_1	I	K	KA	L	MM	N	NA	NN
20	18	15.5	13	8	20	12	8	$20^{0}_{-0.033}$	13	10.5	8	41	5	28	5	6	12	M8 x 1.25	15	24	M20 x 1.5
25	22	19.5	17	8	22	12	10	$26^{0}_{-0.033}$	13	10.5	8	45	6	33.5	5.5	8	12	M10 x 1.25	15	30	M26 x 1.5
32	22	19.5	17	10	27	20	12	$26^{0}_{-0.033}$	13	10.5	8	45	6	37.5	5.5	10	15	M10 x 1.25	15	34.5	M26 x 1.5
40	24	21	22	10	33	20	14	$32^{0}_{-0.039}$	16	13.5	11	50	8	46.5	7	12	15	M14 x 1.5	21.5	42.5	M32 x 2

(mm)

Bore size (mm)	P	RR	S	U	Z	ZZ
20	1/8	9	62	11.5	115	124
25	1/8	9	62	11.5	119	128
32	1/8	12	64	14.5	124	136
40	1/4	12	88	14.5	153	165

Accessory Bracket Dimensions

Single Knuckle Joint (mm)

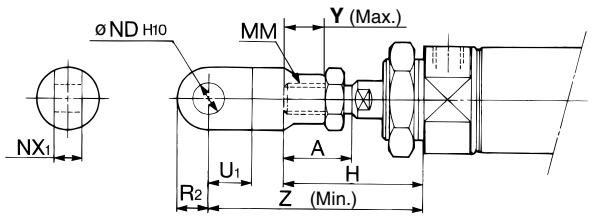

Bore size (mm)	A	H	MM	ND_{H10}	NX_1	U_1	R_2	Y	Z
20	18	41	M8 x 1.25	9 $^{+0.058}_{0}$	9 $^{-0.1}_{-0.2}$	14	10	11	66
25, 32	22	45	M10 x 1.25	9 $^{+0.058}_{0}$	9 $^{-0.1}_{-0.2}$	14	10	14	69
40	24	50	M14 x 1.5	12 $^{+0.070}_{0}$	16 $^{-0.1}_{-0.3}$	20	14	13	92

Single Knuckle Joint (mm)

I-020B, 032B Material: Rolled steel

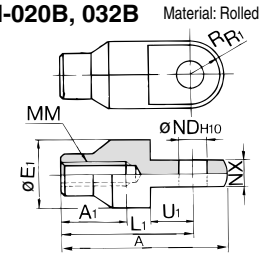

I-040B Material: Free cutting sulfur steel

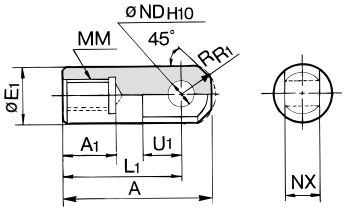

Part no.	Applicable bore size (mm)	A	A_1	E_1	L_1	MM	ND_{H10}	NX	R_1	U_1
I-020B	**20**	46	16	20	36	M8 x 1.25	9 $^{+0.058}_{0}$	9 $^{-0.1}_{-0.2}$	10	14
I-032B	**25, 32**	48	18	20	38	M10 x 1.25	9 $^{+0.058}_{0}$	9 $^{-0.1}_{-0.2}$	10	14
I-040B	**40**	69	22	24	55	M14 x 1.5	12 $^{+0.070}_{0}$	16 $^{-0.1}_{-0.3}$	15.5	20

Double Knuckle Joint (mm)

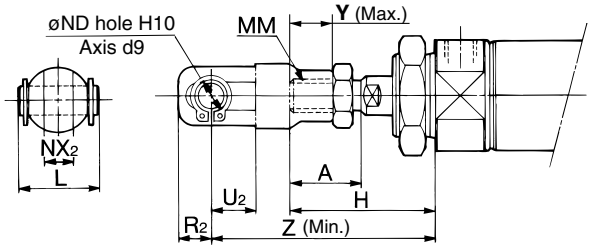

Bore size (mm)	A	H	L	MM	ND	NX_2	R_2	U_2	Y	Z
20	18	41	25	M8 x 1.25	9	9 $^{+0.2}_{+0.1}$	10	14	11	66
25, 32	22	45	25	M10 x 1.25	9	9 $^{+0.2}_{+0.1}$	10	14	14	69
40	24	50	49.7	M14 x 1.5	12	16 $^{+0.3}_{+0.1}$	13	25	13	92

Double Knuckle Joint (mm)

Y-020B, Y-032B Material: Rolled steel

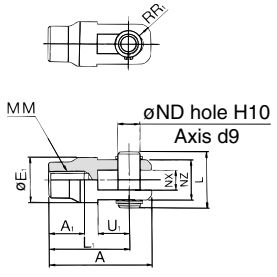

Y-040B Material: Cast iron

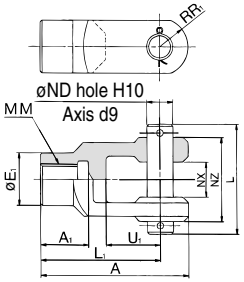

Part no.	Applicable bore size (mm)	A	A_1	E_1	L	L_1	MM	ND	NX	NZ	R_1	U_1	Applicable pin part number	Retaining ring Cotter pin size
Y-020B	20	46	16	20	25	36	M8 x 1.25	9	9 $^{+0.2}_{+0.1}$	18	5	14	CDP-1	Type C 9 for axis
Y-032B	25, 32	48	18	20	25	38	M10 x 1.25	9	9 $^{+0.2}_{+0.1}$	18	5	14	CDP-1	Type C 9 for axis
Y-040B	40	68	22	24	49.7	55	M14 x 1.5	12	16 $^{+0.3}_{+0.1}$	38	13	25	CDP-3	ø3 x 18ℓ

∗ Clevis pin and retaining ring (cotter pin for ø40) are attached.

Double Clevis Pin/Material: Carbon steel (mm)

Bore size: ø20, ø25, ø32

CDP-1

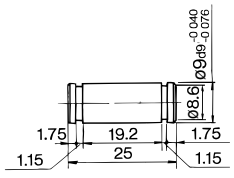

Retaining ring: Type C9 for axis

Bore size: ø40

CDP-2

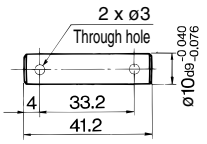

Cotter pin
ø3 x 18ℓ

∗ Retaining rings (copper pins for ø40) are included.

Double Knuckle Pin/Material: Carbon steel (mm)

Bore size: ø20, ø25, ø32

CDP-1

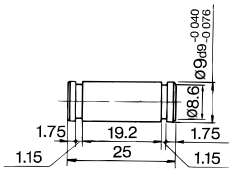

Retaining ring: Type C9 for axis

Bore size: ø40

CDP-3

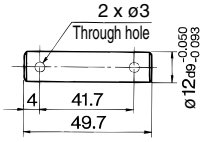

Cotter pin
ø3 x 18ℓ

∗ Retaining rings (copper pins for ø40) are included.

Rod End Nut (mm)

Material: Carbon steel

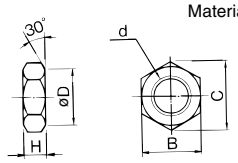

Part no.	Applicable bore size (mm)	B	C	D	d	H
NT-02	**20**	13	15.0	12.5	M8 x 1.25	5
NT-03	**25, 32**	17	19.6	16.5	M10 x 1.25	6
NT-04	**40**	22	25.4	21.0	M14 x 1.5	8

Mounting Nut (mm)

Material: Carbon steel

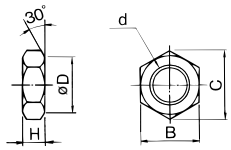

Part no.	Applicable bore size (mm)	B	C	D	d	H
SN-020B	**20**	26	30	25.5	M20 x 1.5	8
SN-032B	**25, 32**	32	37	31.5	M26 x 1.5	8
SN-040B	**40**	41	47.3	40.5	M32 x 2.0	10

Trunnion Nut (mm)

Material: Carbon steel

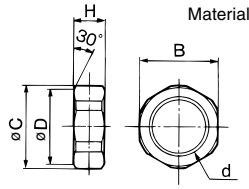

Part no.	Applicable bore size (mm)	B	C	D	d	H
TN-020B	**20**	26	28	25.5	M20 x 1.5	10
TN-032B	**25, 32**	32	34	31.5	M26 x 1.5	10
TN-040B	**40**	41	45	40.5	M32 x 2	10

Clevis Pivot Bracket (For CM2XE) (mm)

Material: Rolled steel plate

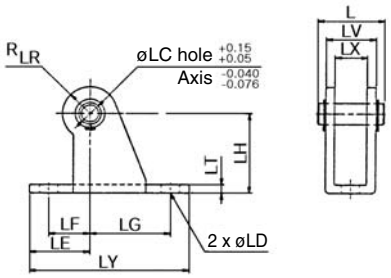

Part no.	Applicable bore size (mm)	L	LC	LD	LE	LF	LG	LH	LR	LT	LX	LY	LV	Applicable pin part no.
CM-E020B	**20, 25**	24.5	8	6.8	22	15	30	30	10	3.2	12	59	18.4	CD-S02
CM-E032B	**32, 40**	34	10	9	25	15	40	40	13	4	20	75	28	CD-S03

Note 1) Clevis bracket pins and retaining rings are included.
Note 2) It cannot be used for single clevis style (CM2C) and double clevis style (CM2D).

Clevis Pin (For CM2XE) (mm)

Material: Carbon steel

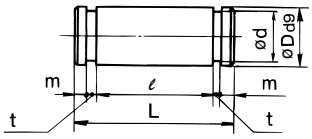

Part no.	Applicable bore size (mm)	D_{d9}	d	L	ℓ	m	t	Applicable retaining ring part no.
CD-S02	**20, 25**	$8^{-0.040}_{-0.076}$	7.6	24.5	19.5	1.6	0.9	Type C 8 for axis
CD-S03	**32, 40**	$10^{-0.040}_{-0.076}$	9.6	34	29	1.35	1.15	Type C 10 for axis

Note) Retaining rings are included.

Regarding mounting bracket, accessory made of stainless steel (Some are not available.), refer to page 1864 for -XB12, External stainless steel cylinder.

Auto Switch Proper Mounting Position (Detection at Stroke End) and Its Mounting Height

Reed auto switch

D-A9□

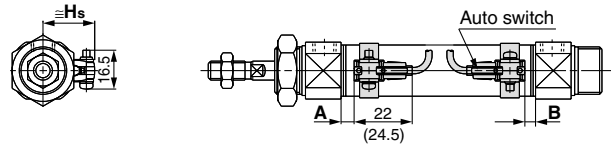

( ): For D-A93 type

D-C7/C8

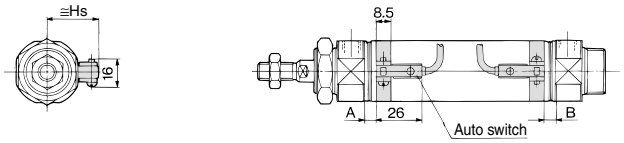

D-B5/B6/B59W

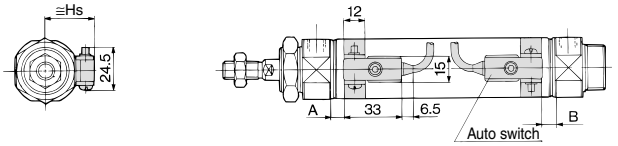

D-A33A/A34A

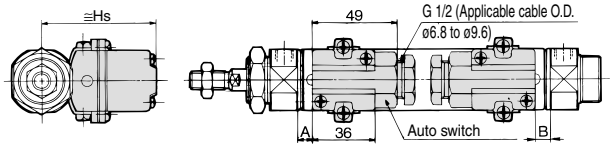

D-A44A

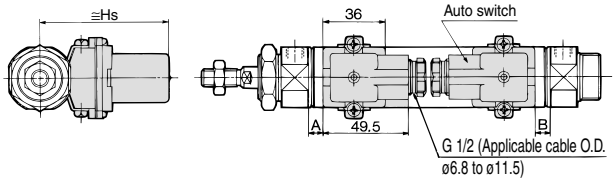

D-C73C/C80C

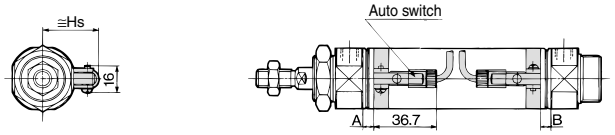

Solid state auto switch

D-M9□
D-M9□W

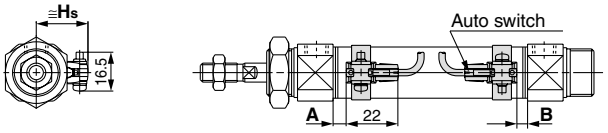

D-H7□/H7□W/H7NF

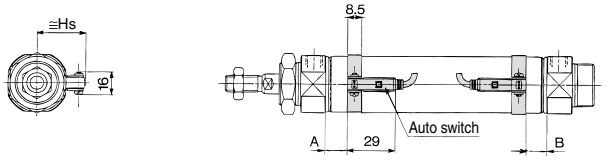

D-G5NTL

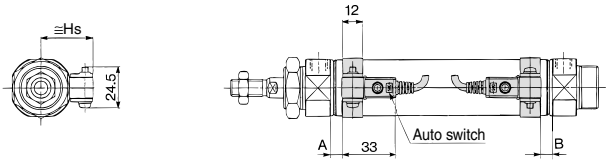

D-G39A/K39A

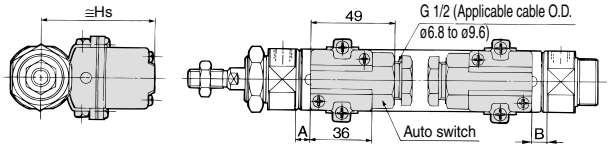

D-H7C

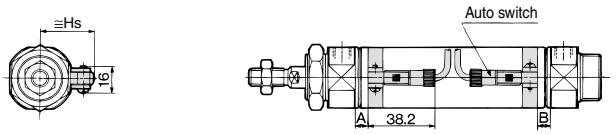

Auto Switch Proper Mounting Position (Detection at Stroke End) and Its Mounting Height

Auto Switch Proper Mounting Position

(mm)

Auto switch model / Bore size (mm)	D-A9□		D-M9□ D-M9□W		D-B5□ D-B64		D-C7□ D-C80 D-C73C D-C80C		D-B59W		D-A3□A D-G39A D-K39A D-A44A		D-H7□ D-H7C D-H7□W D-H7NF		D-G5NTL	
	A	B	A	B	A	B	A	B	A	B	A	B	A	B	A	B
20	6.5	5.5	10.5	9.5	1	0	7	6	4	3	0.5	0	6	5	2.5	1.5
25	6.5	5.5	10.5	9.5	1	0	7	6	4	3	0.5	0	6	5	2.5	1.5
32	7.5	6.5	11.5	10.5	2	1	8	7	5	4	1.5	0.5	7	6	3.5	2.5
40	13.5	11.5	17.5	15.5	7	6	13	12	10	9	6.5	5.5	12	11	8.5	7.5

Note) Adjust the auto switch after confirming the operating conditions in the actual setting.

Auto Switch Mounting Height

(mm)

Auto switch model / Bore size (mm)	D-A9□ D-M9□ D-M9□W	D-B5□ D-B64 D-B59W D-G5NTL D-H7C	D-C7□ D-C80 D-H7□ D-H7□W D-H7NF	D-C73C D-C80C	D-A3□A D-G39A D-K39A	D-A44A
	Hs	Hs	Hs	Hs	Hs	Hs
20	22	25.5	22.5	25	60	69.5
25	24.5	28	25	27.5	62.5	72
32	28	31.5	28.5	31	66	75.5
40	32	35.5	32.5	35	70	79.5

Minimum Auto Switch Mounting Stroke

n: No. of auto switch (mm)

Auto switch model	No. of auto switch mounted				
	1 pc.	2 pcs.		n pcs.	
		Different surfaces	Same surface	Different surfaces	Same surface
D-A9□ D-M9□ D-M9□W	10	15 Note)	45 Note)	$15 + 45\frac{(n-2)}{2}$ (n = 2, 4, 6···)	45 + 45 (n-2)
D-C7□ D-C80	10	15	50	$15 + 45\frac{(n-2)}{2}$ (n = 2, 4, 6···)	50 + 45 (n-2)
D-H7□ D-H7□W D-H7NF	10	15	60	$15 + 45\frac{(n-2)}{2}$ (n = 2, 4, 6···)	60 + 45 (n-2)
D-C73C D-C80C D-H7C	10	15	65	$15 + 50\frac{(n-2)}{2}$ (n = 2, 4, 6···)	65 + 50 (n-2)
D-B5□/B64 D-G5NTL	10	15	75	$15 + 50\frac{(n-2)}{2}$ (n = 2, 4, 6···)	75 + 55 (n-2)
D-B59W	15	20	75	$20 + 50\frac{(n-2)}{2}$ (n = 2, 4, 6···)	75 + 55(n-2)
D-A3□A/G39A D-K39A/A44A	10	35	100	35 + 30(n-2)	100 + 100 (n-2)

Note) When 2 D-A93/M9□/M9□W auto switches are included.

Auto switch model	With 2 auto switches	
	Different surfaces	Same surface
	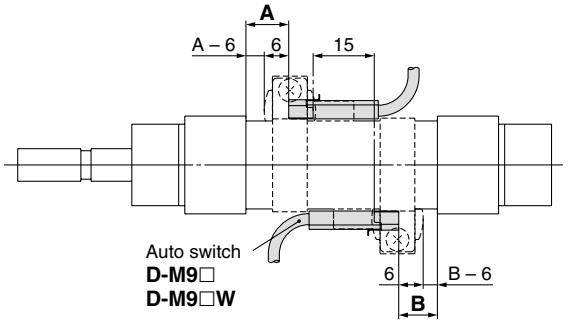 The proper auto switch mounting position is 6 mm inward from the switch holder edge.	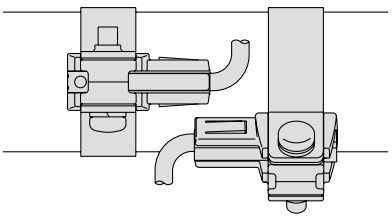 The auto switch is mounted by slightly displacing it in a direction (cylinder tube circumferential exterior) so that the auto switch and lead wire do not interfere with each other.
D-A93	—	Less than 50 strokes
D-M9□ D-M9□W	Less than 20 strokes	Less than 55 strokes

Operating Range

(mm)

Auto switch model	Bore size (mm)			
	20	**25**	**32**	**40**
D-A9□	6	6	6	6
D-M9□ D-M9□W	3.5	3	3.5	3
D-C7□/C80 D-C73C/C80C	7	8	8	8
D-B5□/B64 D-A3□A/A44A	8	8	9	9
D-B59W	12	12	13	13
D-H7□/H7□W D-G5NTL/H7NF	4	4	4.5	5
D-H7C	7	8.5	9	10
D-G39A/K39A	8	9	9	9

∗ Since this is a guideline including hysteresis, not meant to be guaranteed. (Assuming approximately ±30% dispersion)
There may be the case it will vary substantially depending on an ambient environment.

Auto Switch Mounting Bracket Part No.

Auto switch model	Bore size (mm)			
	ø20	ø25	ø32	ø40
D-A9□ **D-M9□** **D-M9□W**	Note) ①BM2-020 ②BJ3-1	Note) ①BM2-025 ②BJ3-1	Note) ①BM2-032 ②BJ3-1	Note) ①BM2-040 ②BJ3-1
D-C7□/C80 **D-C73C/C80C** **D-H7□** **D-H7□W** **D-H7NF**	BM2-020	BM2-025	BM2-032	BM2-040
D-B5□/B64 **D-B59W** **D-G5NTL** **D-G5NBL**	BA2-020	BA2-025	BA2-032	BA2-040
D-A3□A/A44A **D-G39A/K39A**	BM3-020	BM3-025	BM3-032	BM3-040

Note) Two kinds of auto switch mounting brackets are used as a set.

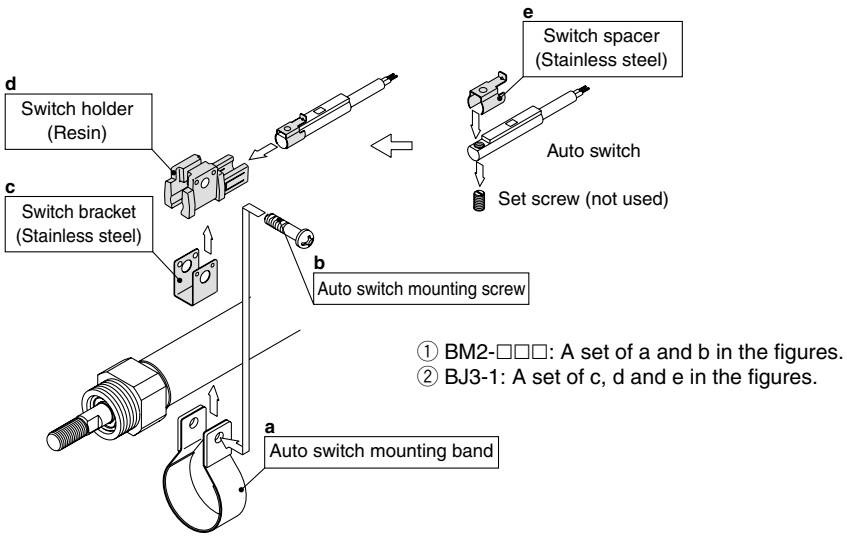

Other than the applicable auto switches listed in "How to Order", the following auto switches can be mounted.
For detailed specifications, refer to pages 1719 to 1827.

Auto switch type	Model	Electrical entry (Direction)	Features
Reed	D-B53, C73, C76	Grommet (In-line)	—
	D-C80		Without indicator light
Solid state	D-H7A1, H7A2, H7B		—
	D-H7NW, H7PW, H7BW		Diagnostic indication (2-color indication)
	D-G5NTL		With timer

∗ With pre-wired connector is available for solid state auto switches. For details, refer to pages 1784 to 1785.
∗ Normally closed (NC = b contact), solid state auto switches (D-F9G, F9H type) are also available. For details, refer to page 1746.
∗ Wide range detection type, solid state auto switches (D-G5NBL type) are also available. Refer to page 1776 for details.

Clean Series Low Speed Cylinder Series 10-, 11-

The type which is applicable for using inside the clean room graded Class 100 by making an actuator's rod section a double seal construction and discharging by relief port directly to the outside of clean room.
Since the external dimensions and applicable auto switches are the same as standard type, refer to the separate catalog of "Pneumatic Clean Series".

Series 10-, 11-CQSX

How to Order



Clean Series

10	Relief type
11	Vacuum type

10 - C(D)QSX B 20 - 30 D - M9BW

With auto switch (Built-in magnet)

Low speed cylinder

Mounting style

B	Through-hole/Both ends tapped common (Standard)

Bore size

12	12 mm
16	16 mm
20	20 mm
25	25 mm

Cylinder stroke (mm)

Bore size (mm)	Standard stroke (mm)
12, 16	5, 10, 15, 20, 25, 30
20	5, 10, 15, 20, 25,
25	30, 35, 40, 45, 50

● Manufacturing of Intermediate stroke
Intermediate strokes by the 1 mm interval are available by using spacers with standard stroke cylinders. The overall length of cylinder will be the same as the standard stroke with a longer one.
Example) 3 mm width spacer is installed in the standard cylinder 10-CQSXB25-50D to make 10-CQSXB25-47D.

Number of auto switches

Nil	2 pcs.
S	1 pc.
n	"n" pcs.

Auto switch

Nil	Without auto switch (Built-in magnet)

∗ For the applicable auto switch model, refer to page 1129.
∗ Auto switches are shipped together, (but not assembled).

Rod end thread

Nil	Standard (Rod end female thread)
M	Rod end male thread

Action

D	Double acting

Specifications

Bore size (mm)		10- (Relief type) 12	16	20	25
Fluid		Air			
Proof pressure		1.5 MPa			
Maximum operating pressure		1.0 MPa			
Minimum operating pressure		0.04 MPa		0.035 MPa	
Ambient and fluid temperature		Without auto switch: –10 to 70°C			
		With auto switch: –10 to 60°C			
Piston speed		1 to 200 mm/s			
Piston rod size		ø6	ø8	ø10	ø12
Rod end thread	Female thread	M3 x 0.5	M4 x 0.7	M5 x 0.8	M6 x 1.0
	Male thread	M5 x 0.8	M6 x 1.0	M8 x 1.25	M10 x 1.25
Stroke tolerance		$^{+1.0}_{0}$ mm			
Port size		M5 x 0.8			
Vacuum port, Relief port		M5 x 0.8			

Bore size (mm)		11- (Vacuum type) 12	16	20	25
Fluid		Air			
Proof pressure		1.5 MPa			
Maximum operating pressure		1.0 MPa			
Minimum operating pressure		0.03 MPa		0.025 MPa	
Ambient and fluid temperature		Without auto switch: –10 to 70°C			
		With auto switch: –10 to 60°C			
Piston speed		1 to 200 mm/s		0.5 to 200 mm/s	
Piston rod size		ø6	ø8	ø10	ø12
Rod end thread	Female thread	M3 x 0.5	M4 x 0.7	M5 x 0.8	M6 x 1.0
	Male thread	M5 x 0.8	M6 x 1.0	M8 x 1.25	M10 x 1.25
Stroke tolerance		$^{+1.0}_{0}$ mm			
Port size		M5 x 0.8			
Vacuum port, Relief port		M5 x 0.8			

Series 10-, 11-CQ2X

How to Order



Clean Series

10	Relief type
11	Vacuum type

10 - C(D)Q2XB 40 - 30 D - J79W

With auto switch (Built-in magnet)

Low speed cylinder

Bore size

32	32 mm
40	40 mm
50	50 mm
63	63 mm

Port thread type

Nil	Rc	ø32 to ø100
TN	NPT	
TF	G	

∗ Without auto switch, ø32, 5 strokes: M thread

Cylinder stroke (mm)

Action

D	Double acting

Standard stroke

Bore size (mm)	Standard stroke (mm)
32, 40	5, 10, 15, 20, 25, 30, 35, 40, 45, 50, 75, 100
50, 63	10, 15, 20, 25, 30, 35, 40, 45, 50, 75, 100

● Manufacturing of Intermediate stroke
Intermediate strokes by the 1 mm interval are available by using spacers with standard stroke cylinders. But, as for ø40 with damper, please consult SMC separately.
Example) 18 mm width spacer is installed in the standard cylinder 10-CQ2XB40-75D to make 10-CQ2XB40-57D.

Number of auto switches

Nil	2 pcs.
S	1 pc.
n	"n" pcs.

Auto switch

Nil	Without auto switch (Built-in magnet)

∗ For the applicable auto switch model, refer to page 1136.
∗ Auto switches are shipped together, (but not assembled).

Rod end thread

Nil	Standard (Rod end female thread)
M	Rod end male thread

Specifications

Bore size (mm)		10- (Relief type) 32	40	50	63	11- (Vacuum type) 32	40	50	63
Fluid		Air							
Proof pressure		1.5 MPa							
Maximum operating pressure		1.0 MPa							
Minimum operating pressure		0.035 MPa		0.03 MPa		0.025 MPa		0.02 MPa	
Ambient and fluid temperature		Without auto switch: –10 to 70°C							
		With auto switch: –10 to 60°C							
Piston speed		1 to 200 mm/s				0.5 to 200 mm/s			
Piston rod size		ø16		ø20		ø16		ø20	
Rod end thread	Female thread	M8 x 1.25		M10 x 1.5		M8 x 1.25		M10 x 1.5	
	Male thread	M14 x 1.5		M18 x 1.5		M14 x 1.5		M18 x 1.5	
Stroke tolerance		$^{+1.0}_{0}$ mm							
Port size		M5 x 0.8, 1/8 Note 1)		1/4		M5 x 0.8, 1/8 Note 1)		1/4	
Vacuum port, Relief port		M5 x 0.8							

Note 1) Only 5 stroke comes with M5 x 0.8 in the case of no auto switch on ø32.

10-,11- CM2X Series

How to Order



Clean Series

10	Relief type
11	Vacuum type

10- C(D)M2X L 40 - 150 - M9BW

Mounting style

B	Basic style
L	Axial foot style
F	Rod side flange style
G	Head side flange style
BZ	Boss-cut basic style
FZ	Boss-cut rod style Flange style

With auto switch (Built-in magnet)

Low speed cylinder

Bore size

20	20 mm
25	25 mm
32	32 mm
40	40 mm

Port thread type

Nil	Rc
TN	NPT
TF	G

Number of auto switches

Nil	2 pcs.
S	1 pc.
n	"n" pcs.

Auto switch

Nil	Without auto switch (Built-in magnet)

∗ For the applicable auto switch model, refer to page 1148.

Cylinder stroke (mm)
Refer to "Standard Stroke" below.

Standard Stroke

Clean series	Bore size (mm)	Standard stroke (mm)
10- (Relief type)	20	25, 50, 75, 100, 125, 150, 175, 200, 250, 300
	25	
	32	
	40	
11- (Vacuum type)	20	
	25	
	32	
	40	

∗ Manufacture of intermediate strokes at 1 mm intervals is possible. (Spacers are not used.)

Specifications

Bore size (mm)	10- (Relief type)				11- (Vacuum type)			
	20	25	32	40	20	25	32	40
Fluid	Air							
Proof pressure	1.5 MPa							
Maximum operating pressure	1.0 MPa							
Minimum operating pressure	0.035 MPa				0.025 MPa			
Ambient and fluid temperature	Without auto switch: –10 to 70°C							
	With auto switch: –10 to 60°C							
Cushion	Rubber bumper							
Piston speed	1 to 200 mm/s				0.5 to 200 mm/s			
Piston rod size	ø8	ø10	ø12	ø14	ø8	ø10	ø12	ø14
Rod end thread	M8 x 1.25	M10 x 1.25		M14 x 1.5	M8 x 1.25	M10 x 1.25		M14 x 1.5
Stroke tolerance	$^{+1.4}_{0}$ mm							
Port size	1/8			1/4	1/8			1/4
Vacuum port, Refief port	M5 x 0.8							

⚠ Precautions

Be sure to read before handling.
Refer to front matters 42 and 43 for Safety Instructions and pages 3 to 11 for Actuator and Auto Switch Precautions.
Refer to the Clean Series catalog separately for the precautions in clean environments.

Operating Precautions

⚠Warning

1. Do not rotate the cover.
- When installing a cylinder or screwing a pipe fitting into the port, the coupling portion of the cover could break if the cover rotated.

⚠Caution

1. Be careful of the snap ring to pop out.
- When replacing the rod seal, take care that the snap ring does not spring out while you are removing it.

Maintenance

⚠Caution

1. Grease pack
When maintenance requires only grease, use the following part number to order.
Grease pack part no.: GR-X-005 (5 g)

Related Products:
Made to Order Specifications:
-XB13: Low Speed Cylinder
5 to 50 mm/s (CY1/CY3: 7 to 50 mm/s)

Made to Order

Symbol

Low Speed Cylinder — -XB13

CG1 — Standard model no. — XB13

MB — Standard model no. — XB13

Low speed cylinder ●

CY1 / CY3 — Standard model no. — XB13

MGP$^{M}_{L}$ — Standard model no. — XB13

MGGM — Standard model no. — XB13

MGCM — Standard model no. — XB13

CX2 — Standard model no. — XB13

CXW$^{M}_{L}$ — Standard model no. — XB13

CXS$^{M}_{L}$ — Standard model no. — XB13

MXH / MXU — Standard model no. — XB13

CXT$^{M}_{L}$ / CXSJ$^{M}_{L}$ — Standard model no. — XB13

Low speed cylinder ●

Note) Operate without lubrication from a pneumatic system lubricator.

Specifications

Applicable cylinder	Air cylinder Standard		Magnetically coupled rodless cylinder	Compact guide cylinder	Guide cylinder		Slide unit		Dual rod cylinder		Compact slide		Platform cylinder
					Slide bearing								
Series	CG1	MB	CY$^{1}_{3}$	MGP$^{M}_{L}$	MGGM	MGCM	CX2	CXW$^{M}_{L}$	CXSJ$^{M}_{L}$	CXS$^{M}_{L}$	MXH	MXU	CXT$^{M}_{L}$
Action	Double acting, Single rod		Double acting										
Bore size (mm)	20, 25, 32 40, 50, 63 80, 100	32, 40 50, 63 80, 100	CY3B: 6, 10, 15, 20, 25, 32 40, 50, 63 CY1S, CY1L: 6 to 40	12, 16, 20 25, 32, 40 50, 63, 80 100	20, 25, 32 40, 50, 63 80, 100	20, 25 32, 40 50	10, 15 25	10, 16 20, 25 32	6, 10 15, 20 25, 32	6, 10 15, 20 25, 32	6, 10 16, 20	6, 10 16	12, 16 20, 25 32, 40
Piston speed	5 to 50 mm/s		7 to 50 mm/s	5 to 50 mm/s	5 to 50 mm/s								
Cushion	Rubber bumper	Air cushion on both ends	Rubber bumper		Rubber bumper (Basic cylinder)		Shock absorber (CX2: Option)		Rubber bumper				
Auto switch	Mountable												
Mounting	Basic Foot Flange Trunnion Clevis	Basic Foot Flange Clevis Trunnion	Basic Slider	Basic	Basic Front mounting Flange		Basic						
Dimensions	Dimensions and specifications are the same as standard products of double acting.												
Additional specifications													

∗ No shock absorber is available for the Series MGGM.

Related Products:
Speed Controller for Low Speed Operation

The effective area of controlled flow is approximately 1/10 of the standard type.
These controllers are suitable for controlling the speed of microspeed cylinders.
The dual type speed controller is especially suitable for cylinders with a small bore size.

Elbow/Universal Type



Air Flow/Effective Area

Model		AS12□1FM-M5 AS13□1FM-M5	AS22□1FM-□01 AS23□1FM-□01		AS22□1FM-□02 AS23□1FM-□02		
Tubing O.D.	Metric size	ø3.2, ø4, ø6	ø3.2, ø4	ø6, ø8	ø4	ø6	ø8, ø10
	Inch size	ø1/8", ø5/32", ø3/16" ø1/4"	ø1/8", ø5/32"	ø3/16", ø1/4" ø5/16"	ø5/32"	ø3/16"	ø1/4", ø5/16" ø3/8"
Controlled flow	Air flow (ℓ/min (ANR))	7	12		38		
	Effective area (mm²)	0.1	0.2		0.6		
Free flow	Flow rate (ℓ/min (ANR))	100	180	230	260	390	460
	Effective area (mm²)	1.5	2.7	3.5	4	6	7

Note) Supply pressure: 0.5 MPa, Temperature: 20°C

In-line Type



Air Flow/Effective Area

Model		AS1001FM	AS2001FM		AS2051FM	
Tubing O.D.	Metric size	ø3.2, ø4, ø6	ø4	ø6	ø6	ø8
	Inch size	ø1/8", ø5/32", ø3/16" ø1/4"	ø5/32"	ø3/16", ø1/4"	ø3/16"	ø1/4", ø5/16"
Controlled flow	Air flow (ℓ/min (ANR))	7	12		38	
	Effective area (mm²)	0.1	0.2		0.6	
Free flow	Flow rate (ℓ/min (ANR))	100	130	230	290	460
	Effective area (mm²)	1.5	2	3.5	4.5	7

Note) Supply pressure: 0.5 MPa, Temperature: 20°C

Elbow Type (Metal body)



Air Flow/Effective Area

Model			AS12□0M		AS22□0M-□01		AS22□0M-□02	
Port size		Cylinder side	M5 x 0.8	10-32 UNF	R 1/8	NPT 1/8	R 1/4	NPT 1/4
		Tube side			Rc 1/8		Rc 1/4	
Controlled flow	Air flow (ℓ/min (ANR))		7		12		38	
	Effective area (mm²)		0.1		0.2		0.6	
Free flow	Flow rate (ℓ/min (ANR))		105		280		420	
	Effective area (mm²)		1.6		4.3		6.5	

Note) Supply pressure: 0.5 MPa, Temperature: 20°C

Dual Type



Air Flow/Effective Area

Model		ASD230FM-M5	ASD330FM-□01	ASD430FM-□02	
Tubing O.D.	Metric size	ø4, ø6	ø6, ø8	ø6	ø8, ø10
	Inch size	ø1/8", ø5/32" ø3/16", ø1/4"	ø3/16", ø1/4"	—	ø1/4", ø5/16" ø3/8"
Controlled flow (Free flow)	Air flow (ℓ/min (ANR))	7	12	38	
	Effective area (mm²)	0.1	0.2	0.6	

Note) Supply pressure: 0.5 MPa, Temperature: 20°C

Low Speed Cylinder Specific Product Precautions

Be sure to read before handling.
Refer to front matters 42 and 43 for Safety Instructions and pages 3 to 11 for Actuator and Auto Switch Precautions.

Recommended Pneumatic Circuit

⚠Warning

Horizontal Operation

I

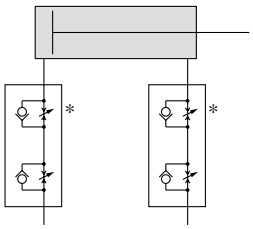

Dual speed controller

Speed is controlled by meter-out circuit. Using concurrently the meter-in circuit can alleviate the stick-slip. More stable low speed operation can be achieved than meter-in circuit alone.

II

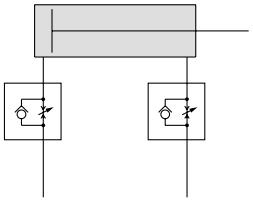

Meter-in speed controller

Meter-in speed controllers can reduce lurching while controlling the speed. The two adjustment needles facilitate adjustment.

Vertical Operation

I

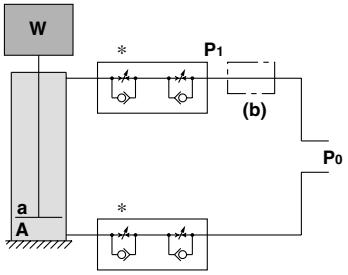

(1) Speed is controlled by meter-out circuit. Using concurrently the meter-in circuit can alleviate the stick-slip.*
(2) Depending on the size of the load, installing a regulator with check valve at position **(b)** can deduce lurching during descent and operation delay during ascent.
As a guide,
when **W + P0a>P0A**,
adjust **P1** to make **W + P1a = P0A**.

II

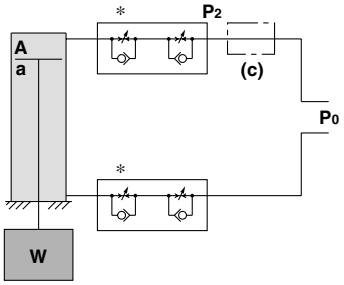

(1) Speed is controlled by meter-out circuit. Using concurrently the meter-in circuit can alleviate the stick-slip.*
(2) Installing a regulator with check valve at position **(c)** can reduce lurching during descent and operation delay during ascent.
As a guide,
adjust **P2** to make **W + P2A = P0a**.

W: Load (N) **P0**: Operating pressure (MPa) **P1, P2**: Reduced pressure (MPa) **a**: Rod side piston area (mm^2) **A**: Head side piston area (mm^2)

⚠Warning

Since **C□J2X**, **C□UX10** are subject to internal leakage due to their construction, the speed may not be fully controlled with the meter-out controller (*) during low speed operation.

Selection

⚠Caution

1. **Operate within the standard strokes.**
   Operating with the stroke exceeding the standard stroke may cause malfunction.
2. **Provide a construction that does not apply a lateral load to the cylinder.**
   Applying a lateral load to the cylinder may cause malfunction.
3. **Do not use the product at a high frequency.**
   Use it at 30 cpm or less as a guideline.
4. **Do not wipe out the grease in the sliding part of the air cylinder.**
   Doing so forcefully may cause malfunction.

Pneumatic Circuit

⚠Caution

1. **The piping length between the speed controller and the cylinder port must be kept as short as possible.**
   If the speed controller and the cylinder port are far apart, speed adjustment may be unstable.
2. **Use a low speed controller to easily adjust for low speed operation or a dual speed controller (Series ASD) to prevent cylinders from popping out.**
   (When the low speed controller is used, the maximum speed may be limited.)

Smooth Cylinder

Series CM2Y

ø20, ø25, ø32, ø40

How to Order

CM2Y L 40 □ – 150 – □

With auto switch **CDM2Y L 40 □ – 150 – M9BW □ □**

With auto switch
(Built-in magnet)

Mounting style

B	Basic style
L	Axial foot style
F	Rod side flange style
G	Head side flange style
C	Single clevis style
D	Double clevis style
U	Rod side trunnion style
T	Head side trunnion style
E	Integral clevis style
BZ	Boss-cut basic style
FZ	Boss-cut rod side flange style
UZ	Boss-cut rod side trunnion style

Bore size

20	20 mm
25	25 mm
32	32 mm
40	40 mm

Thread type

Nil	Rc
TN	NPT
TF	G

Cylinder stroke (mm)
Refer to "Standard Stroke" on page 1070.

Made to Order
For details, refer to page 1070.

Number of auto switches

Nil	2 pcs.
S	1 pc.
n	n pcs.

Auto switch

Nil	Without auto switch

∗ For the applicable auto switch model, refer to the table below.

Built-in Magnet Cylinder Model

If a built-in magnet cylinder without an auto switch is required, there is no need to enter the symbol for the auto switch.
(Example) CDM2YB20-100

Applicable Auto Switch/Refer to pages 1719 to 1827 for further information on auto switches.

Type	Special function	Electrical entry	Indicator light	Wiring (Output)	Load voltage DC		Load voltage AC	Auto switch model	Lead wire (m) 0.5 (Nil)	1 (M)	3 (L)	5 (Z)	None (N)	Pre-wired connector	Applicable load	
Solid state switch	——	Grommet	Yes	3-wire (NPN)	24 V	5 V, 12 V	—	M9N	●	●	●	○	—	○	IC circuit	Relay, PLC
				3-wire (PNP)				M9P	●	●	●	○	—	○		
				2-wire		12 V		M9B	●	●	●	○	—	○	—	
		Connector						H7C	●	—	●	●	●	—		
		Terminal conduit		3-wire (NPN)		5 V, 12 V		G39A	—	—	—	—	●	—	IC circuit	
				2-wire		12 V		K39A	—	—	—	—	●	—	—	
	Diagnostic indication (2-color)	Grommet		3-wire (NPN)		5 V, 12 V		M9NW	●	●	●	○	—	○	IC circuit	
				3-wire (PNP)				M9PW	●	●	●	○	—	○		
				2-wire		12 V		M9BW	●	●	●	○	—	○	—	
	With diagnostic output (2-color)			4-wire (NPN)		5 V, 12 V		H7NF	●		●	○	—	○	IC circuit	
Reed switch	——	Grommet	Yes	3-wire (Equiv. NPN)	—	5 V	—	A96	●	—	●	—	—	—	IC circuit	—
				2-wire	24 V	12 V	100 V	A93	●	—	●	—	—	—	—	Relay, PLC
			No				100 V or less	A90	●	—	●	—	—	—	IC circuit	
			Yes				100 V, 200 V	B54	●	—	●	●	—	—	—	
			No				200 V or less	B64	●	—	●	—	—	—		
		Connector	Yes				—	C73C	●	—	●	●	●	—		
			No				24 V or less	C80C	●	—	●	●	●	—	IC circuit	
		Terminal conduit	Yes				—	A33A	—	—	—	—	●	—	—	PLC
							100 V, 200 V	A34A	—	—	—	—	●	—		Relay, PLC
		DIN terminal						A44A	—	—	—	—	●	—		
	Diagnostic indication (2-color)	Grommet				—	—	B59W	●	—	●	—	—	—		

∗ Lead wire length symbols: 0.5 m ····· Nil (Example) M9NW
1 m ····· M (Example) M9NWM
3 m ····· L (Example) M9NWL
5 m ····· Z (Example) M9NWZ
None ····· N (Example) H7CN

∗ ○: Manufactured upon receipt of order.
∗ D-A9□V□/M9□V□/M9□WV□/M9□A(V)L types cannot be mounted.
∗ Do not add the suffix (N) indicating "no lead wire" to the part numbers of models D-A3□A, A44A, G39A and K39A.

∗ In addition to the models in the above table, there are some other auto switches that are applicable. For more information, refer to page 1082.
∗ Refer to pages 1784 and 1785 for details of auto switches with a pre-wired connector.
∗ D-A9□/M9□/M9□W auto switches are shipped together (not assembled). (Only auto switch mounting brackets are assembled before shipped.)
∗ D-C7□□/C80□/H7□□ auto switches are assembled at the time of shipment.



Integral clevis

JIS Symbol
Double acting: Single rod

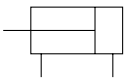

Made to Order

Made to Order
(For details, refer to pages 1836, 1851 to 1954.)

Symbol	Specifications
—XA□	Change of rod end shape
—XC3	Special port location
—XC6	Made of stainless steel
—XC9	Adjustable stroke cylinder/adjustable retraction type
—XC13	Auto switch rail mounting style
—XC20	Head cover axial port

⚠ Precautions

Be sure to read before handling. Refer to front matters 42 and 43 for Safety Instructions and pages 3 to 11 for Actuator and Auto Switch Precautions.

Handling Precautions

⚠Warning

1. Do not rotate the cover

• When installing a cylinder or screwing a fitting into the port, the coupling portion of the cover may be damaged if the cover rotates.

⚠Caution

1. Be careful of the retaining ring to pop out.

• When replacing the rod seal, be careful of the retaining ring not to pop out while removing it.

Replacement Part: Rod Seal

Bore size (mm)	Part no.
20	PDU-8Z
25	PDU-10Z
32	PDU-12LZ
40	PDU-14LZ

Grease Pack for Maintenance

When only grease for maintenance is necessary, please order by the following part numbers.

Grease pack part no.: GR-L-005 (5 g)
GR-L-010 (10 g)
GR-L-150 (150 g)

Specifications

Bore size (mm)	20	25	32	40
Action	Double acting, Single rod			
Piston speed	5 to 500 mm/s			
Fluid	Air			
Proof pressure	1.05 MPa			
Maximum operating pressure	0.7 MPa			
Ambient and fluid temperature	Without auto switch –10 to 70°C (with no freezing)			
	With auto switch –10 to 60°C (with no freezing)			
Lubrication	Non-lube			
Stroke length tolerance	$^{+1.4}_{0}$ mm			
Cushion	Rubber bumper			
Allowable leakage rate	0.5 ℓ/min (ANR) or less			

Minimum Operating Pressure

Unit: MPa

Bore size (mm)	20	25	32	40
Minimum operating pressure	0.02			

Mounting Bracket Part No.

Mounting bracket	Minimum order	Bore size (mm)				Description (when ordering a minimum number)
		20	25	32	40	
Axial foot*	2	CM-L020B	CM-L032B		CM-L040B	Foot 2 pcs., Mounting nut 1 pc.
Flange	1	CM-F020B	CM-F032B		CM-F040B	Flange 1 pc., Mounting nut 1 pc.
Single clevis**	1	CM-C020B	CM-C032B		CM-C040B	Single clevis 1 pc., Liner 3 pcs.
Double clevis (with pin) **, ***	1	CM-D020B	CM-D032B		CM-D040B	Double clevis 1 pc., Liner 3 pcs., Clevis pin 1 pc., Retaining ring 2 pcs.
Trunnion (with nut)	1	CM-T020B	CM-T032B		CM-T040B	Trunnion 1 pc., Trunnion nut 1 pc.

* When ordering foot brackets, order 2 pieces per cylinder unit.
** Three liners are included in the clevis bracket for adjusting an angle when mounting it.
*** Clevis pins and retaining rings (cotter pins for ø40) are included.

Mounting Bracket and Accessory

Mounting \ Accessory	Standard			Option		
	Mounting nut	Rod end nut	Clevis pin	Single knuckle joint	Double knuckle joint Note 3)	Clevis bracket Note 4)
Basic style	● (1 pc.)	●	—	●	●	—
Axial foot style	● (2)	●	—	●	●	—
Rod side flange style	● (1)	●	—	●	●	—
Head side flange style	● (1)	●	—	●	●	—
Integral clevis style	— Note 1)	●	—	●	●	●
Single clevis style	— Note 1)	●	—	●	●	—
Double clevis style Note 3)	— Note 1)	●	● Note 5)	●	●	—
Rod side trunnion style	● (1) Note 2)	●	—	●	●	—
Head side trunnion style	● (1) Note 2)	●	—	●	●	—
Boss-cut basic style	● (1)	●	—	●	●	—
Boss-cut flange style	● (1)	●	—	●	●	—
Boss-cut trunnion style	● (1)	●	—	●	●	—

Note 1) Mounting nuts are not attached to the integral clevis, single clevis and double clevis types.
Note 2) Trunnion nuts are mounted on the rod side trunnion style and head side trunnion style.
Note 3) Pins and retaining rings (cotter pins in case of ø40) are packed with the double clevis and double knuckle joint styles.
Note 4) Pins and retaining rings are packed with clevis brackets.
Note 5) Retaining rings (cotter pins for ø40) are included in clevis pins.

Standard Stroke

Bore size (mm)	Standard stroke (mm)
20, 25, 32, 40	25, 50, 75, 100, 125, 150, 200, 250, 300

Note 1) Manufacture of intermediate strokes at 1 mm intervals is possible. (Spacers are not used.)
Note 2) As the stroke increases, more sliding resistance may result due to the deflection of the piston rod and other factors. Take measures such as the installation of a guide.

Mass

(kg)

Bore size (mm)		20	25	32	40
Basic mass	Basic style	0.14	0.21	0.28	0.56
	Axial foot style	0.29	0.37	0.44	0.83
	Flange style	0.20	0.30	0.37	0.68
	Clevis integrated style	0.12	0.19	0.27	0.52
	Single clevis style	0.18	0.25	0.32	0.65
	Double clevis style	0.19	0.27	0.33	0.69
	Trunnion style	0.18	0.28	0.34	0.66
	Boss-cut basic style	0.13	0.19	0.26	0.53
	Boss-cut flange style	0.19	0.28	0.35	0.65
	Boss-cut trunnion style	0.17	0.26	0.32	0.63
Additional mass per each 50 mm of stroke		0.04	0.06	0.08	0.13
Option bracket	Clevis bracket (With pin)	0.07	0.07	0.14	0.14
	Single knuckle joint	0.06	0.06	0.06	0.23
	Double knuckle joint (With pin)	0.07	0.07	0.07	0.20

Calculation: (Example) **CM2YL32-100**
- Basic mass·····0.44 (Foot style, ø32)
- Additional mass·····0.08/50 stroke
- Cylinder stroke·····100 stroke

0.44 + 0.08 x 100/50 = 0.60 kg

Low Friction Cylinder Mounting

CM2Y [Mounting style] [Bore size] – [Stroke] – **X1854**

• **Same mounting specification as CM2Q**

In order to adjust the mounting dimensions of the low friction cylinder (CM2Q), extend the longitudinal dimension (S, ZZ) by 3 mm.

Specifications

Cylinder bore size (mm)	20	25	32	40
Action	Double acting, Single rod			
Direction of low friction	Dual directions			
Fluid	Air			
Proof pressure	1.05 MPa			
Maximum operating pressure	0.7 MPa			

∗ Low friction operates in dual directions.

Dimensions

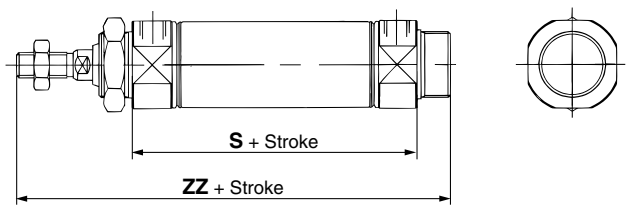

Bore size (mm)	S	ZZ
20	65	119
25	65	123
32	67	125
40	91	157

∗ Add 3 mm to S and ZZ dimensions of the double acting, single rod type on pages 1072 to 1076 for the dimensions for each mounting bracket other than the basic style.

Basic Style (B)

CM2YB **Bore size** — **Stroke**

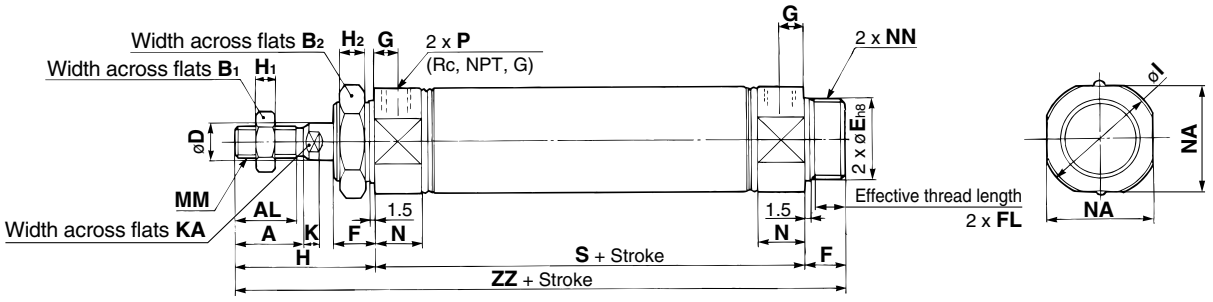

Boss-cut

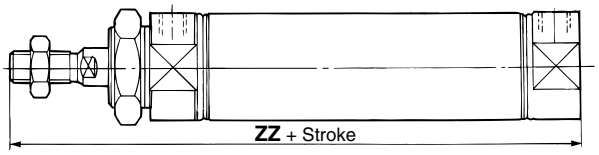

(mm)

Bore size (mm)	A	AL	B1	B2	D	E	F	FL	G	H	H1	H2	I	K	KA	MM	N	NA	NN	P	S	ZZ
20	18	15.5	13	26	8	$20^{0}_{-0.033}$	13	10.5	8	41	5	8	28	5	6	M8 x 1.25	15	24	M20 x 1.5	1/8	62	116
25	22	19.5	17	32	10	$26^{0}_{-0.033}$	13	10.5	8	45	6	8	33.5	5.5	8	M10 x 1.25	15	30	M26 x 1.5	1/8	62	120
32	22	19.5	17	32	12	$26^{0}_{-0.033}$	13	10.5	8	45	6	8	37.5	5.5	10	M10 x 1.25	15	34.5	M26 x 1.5	1/8	64	122
40	24	21	22	41	14	$32^{0}_{0.039}$	16	13.5	11	50	8	10	46.5	7	12	M14 x 1.5	21.5	42.5	M32 x 2	1/4	88	154

Boss-cut (mm)

Bore size (mm)	ZZ
20	103
25	107
32	109
40	138

Axial Foot Style (L)

CM2YL **Bore size** — **Stroke**

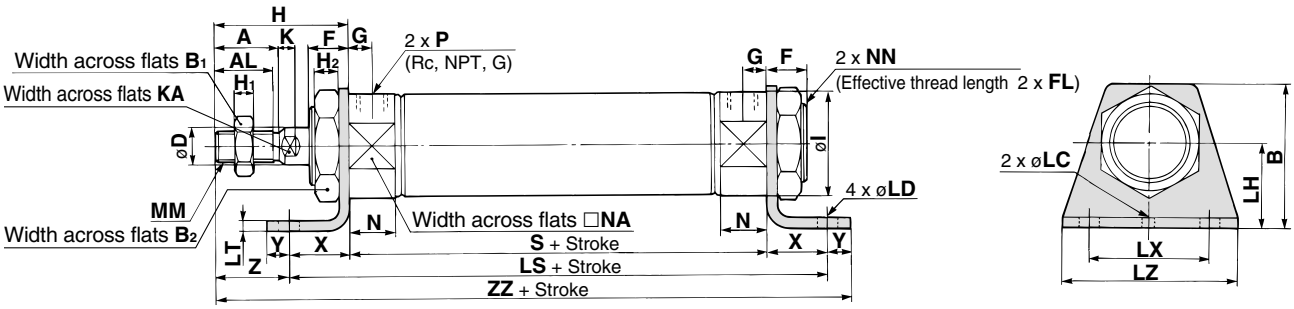

(mm)

Bore size (mm)	A	AL	B	B1	B2	D	F	FL	G	H	H1	H2	I	K	KA	LC	LD	LH	LS	LT	LX	LZ	MM	N	NA	NN	P	S	X	Y	Z	ZZ
20	18	15.5	40	13	26	8	13	10.5	8	41	5	8	28	5	6	4	6.8	25	102	3.2	40	55	M8 x 1.25	15	24	M20 x 1.5	1/8	62	20	8	21	131
25	22	19.5	47	17	32	10	13	10.5	8	45	6	8	33.5	5.5	8	4	6.8	28	102	3.2	40	55	M10 x 1.25	15	30	M26 x 1.5	1/8	62	20	8	25	135
32	22	19.5	47	17	32	12	13	10.5	8	45	6	8	37.5	5.5	10	4	6.8	28	104	3.2	40	55	M10 x 1.25	15	34.5	M26 x 1.5	1/8	64	20	8	25	137
40	24	21	54	22	41	14	16	13.5	11	50	8	10	46.5	7	12	4	7	30	134	3.2	55	75	M14 x 1.5	21.5	42.5	M32 x 2	1/4	88	23	10	27	171

Rod Side Flange Style (F)

CM2YF | **Bore size** | — | **Stroke** | |

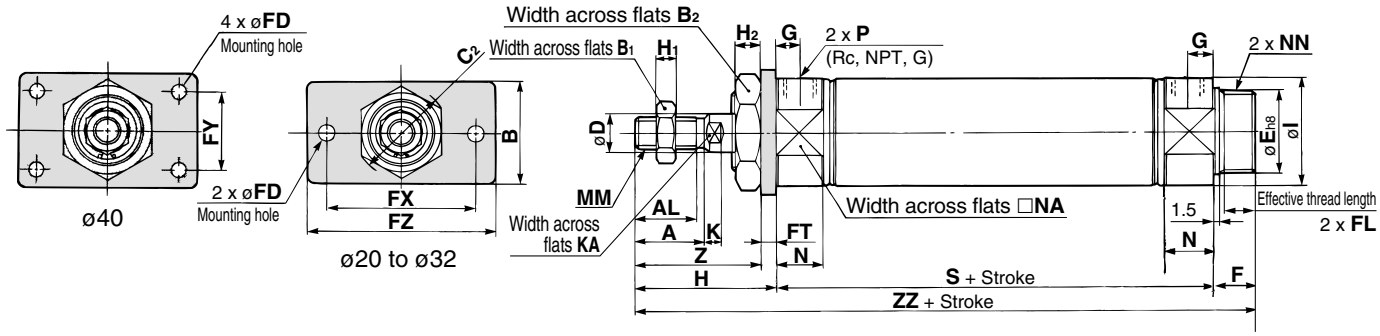

Boss-cut style

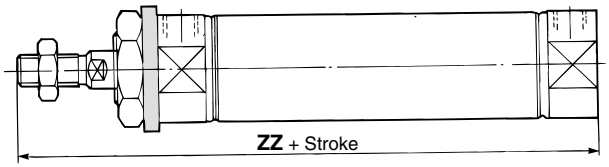

(mm)

Bore size (mm)	A	AL	B	B_1	B_2	C_2	D	E	F	FL	FD	FT	FX	FY	FZ	G	H	H_1	H_2	I	K	KA	MM	N	NA	NN	P	S	Z	ZZ
20	18	15.5	34	13	26	30	8	$20^{0}_{-0.033}$	13	10.5	7	4	60	—	75	8	41	5	8	28	5	6	M8 x 1.25	15	24	M20 x 1.5	1/8	62	37	116
25	22	19.5	40	17	32	37	10	$26^{0}_{-0.033}$	13	10.5	7	4	60	—	75	8	45	6	8	33.5	5.5	8	M10 x 1.25	15	30	M26 x 1.5	1/8	62	41	120
32	22	19.5	40	17	32	37	12	$26^{0}_{-0.033}$	13	10.5	7	4	60	—	75	8	45	6	8	37.5	5.5	10	M10 x 1.25	15	34.5	M26 x 1.5	1/8	64	41	122
40	24	21	52	22	41	47.3	14	$32^{0}_{-0.039}$	16	13.5	7	5	66	36	82	11	50	8	10	46.5	7	12	M14 x 1.5	21.5	42.5	M32 x 2	1/4	88	45	154

Boss-cut Style (mm)

Bore size (mm)	ZZ
20	103
25	107
32	109
40	138

Head Side Flange Style (G)

CM2YG **Bore size** — **Stroke** □

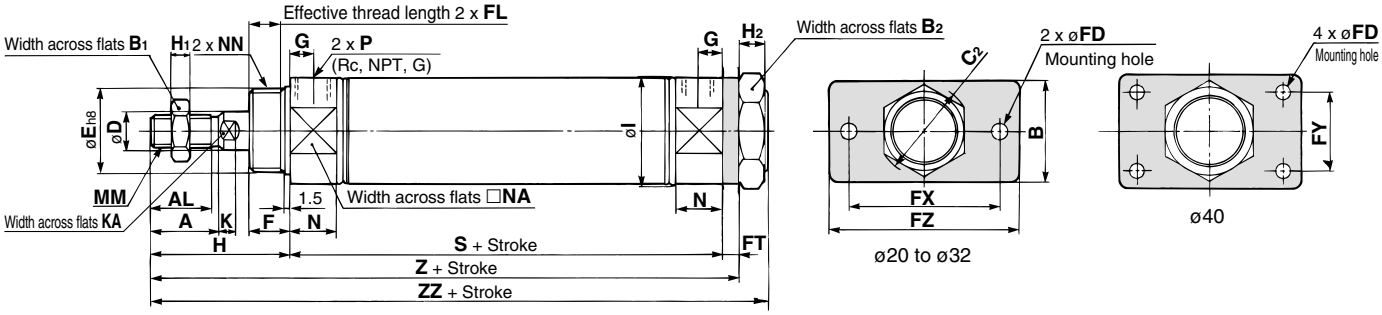

(mm)

Bore size (mm)	A	AL	B	B_1	B_2	C_2	D	E	F	FL	FD	FT	FX	FY	FZ	G	H	H_1	H_2	I
20	18	15.5	34	13	26	30	8	$20^{0}_{-0.033}$	13	10.5	7	4	60	—	75	8	41	5	8	28
25	22	19.5	40	17	32	37	10	$26^{0}_{-0.033}$	13	10.5	7	4	60	—	75	8	45	6	8	33.5
32	22	19.5	40	17	32	37	12	$26^{0}_{-0.033}$	13	10.5	7	4	60	—	75	8	45	6	8	37.5
40	24	21	52	22	41	47.3	14	$32^{0}_{-0.039}$	16	13.5	7	5	66	36	82	11	50	8	10	46.5

(mm)

Bore size (mm)	K	KA	MM	N	NA	NN	P	S	Z	ZZ
20	5	6	M8 x 1.25	15	24	M20 x 1.5	1/8	62	107	116
25	5.5	8	M10 x 1.25	15	30	M26 x 1.5	1/8	62	111	120
32	5.5	10	M10 x 1.25	15	34.5	M26 x 1.5	1/8	64	113	122
40	7	12	M14 x 1.5	21.5	42.5	M32 x 2	1/4	88	143	154

Single Clevis Style (C)

CM2YC **Bore size** — **Stroke** □

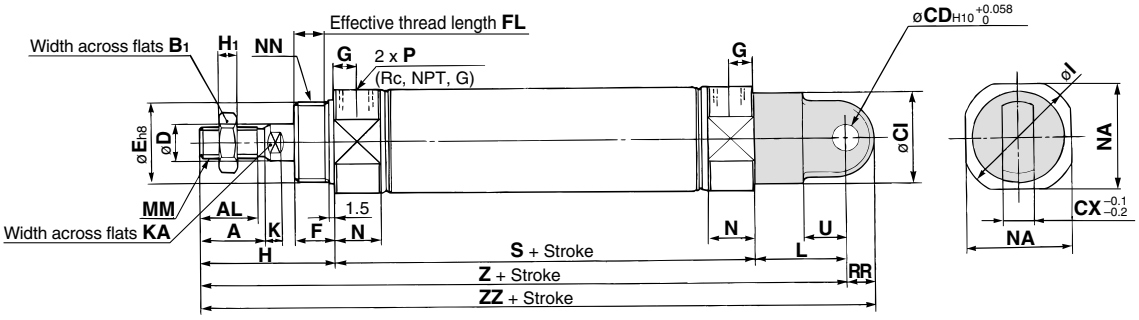

(mm)

Bore size (mm)	A	AL	B_1	CI	CD	CX	D	E	F	FL	G	H	H_1	I	K	KA	L	MM	N	NA	NN	P	RR	S	U	Z	ZZ
20	18	15.5	13	24	9	10	8	$20^{0}_{-0.033}$	13	10.5	8	41	5	28	5	6	30	M8 x 1.25	15	24	M20 x 1.5	1/8	9	62	14	133	142
25	22	19.5	17	30	9	10	10	$26^{0}_{-0.033}$	13	10.5	8	45	6	33.5	5.5	8	30	M10 x 1.25	15	30	M26 x 1.5	1/8	9	62	14	137	146
32	22	19.5	17	30	9	10	12	$26^{0}_{-0.033}$	13	10.5	8	45	6	37.5	5.5	10	30	M10 x 1.25	15	34.5	M26 x 1.5	1/8	9	64	14	139	148
40	24	21	22	38	10	15	14	$32^{0}_{-0.039}$	16	13.5	11	50	8	46.5	7	12	39	M14 x 1.5	21.5	42.5	M32 x 2	1/4	11	88	18	177	188

Double Clevis Style (D)

CM2YD Bore size — Stroke

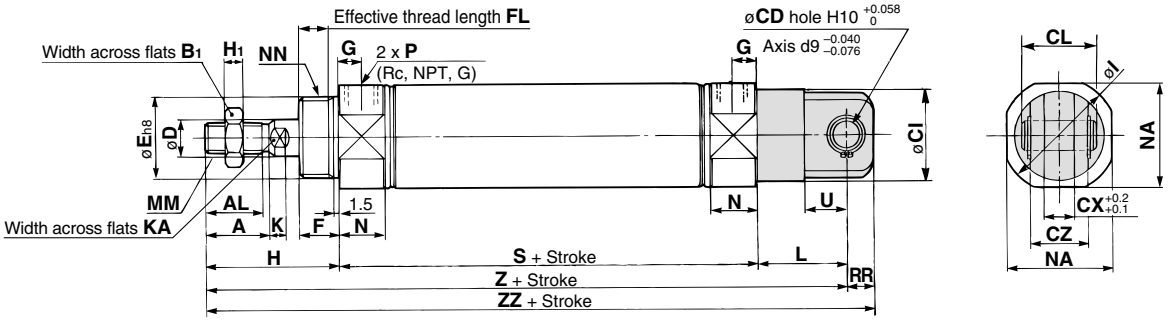

(mm)

Bore size (mm)	A	AL	B1	CD	CI	CL	CX	CZ	D	E	F	FL	G	H	H1	I	K	KA	L	MM	N	NA	NN	P	RR	S	U	Z	ZZ
20	18	15.5	13	9	24	25	10	19	8	20 $^{0}_{-0.033}$	13	10.5	8	41	5	28	5	6	30	M8 x 1.25	15	24	M20 x 1.5	1/8	9	62	14	133	142
25	22	19.5	17	9	30	25	10	19	10	26 $^{0}_{-0.033}$	13	10.5	8	45	6	33.5	5.5	8	30	M10 x 1.25	15	30	M26 x 1.5	1/8	9	62	14	137	146
32	22	19.5	17	9	30	25	10	19	12	26 $^{0}_{-0.033}$	13	10.5	8	45	6	37.5	5.5	10	30	M10 x 1.25	15	34.5	M26 x 1.5	1/8	9	64	14	139	148
40	24	21	22	10	38	41.2	15	30	14	32 $^{0}_{-0.039}$	16	13.5	11	50	8	46.5	7	12	39	M14 x 1.5	21.5	42.5	M32 x 2	1/4	11	88	18	177	188

∗ Clevis pin and snap ring (cotter pin for bore size ø40) are shipped together.

Rod Side Trunnion Style (U)

CM2YU Bore size — Stroke

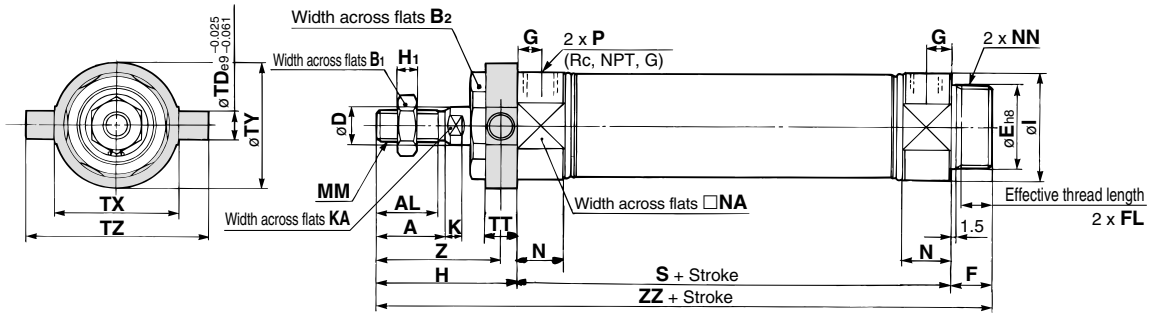

Boss-cut style

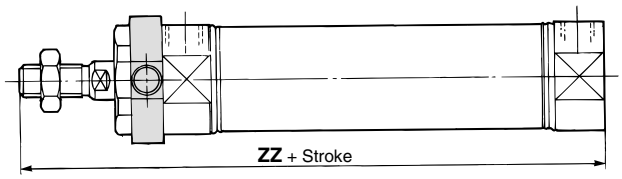

(mm)

Bore size (mm)	A	AL	B1	B2	D	E	F	FL	G	H	H1	I	K	KA	MM	N	NA	NN	P
20	18	15.5	13	26	8	20 $^{0}_{-0.033}$	13	10.5	8	41	5	28	5	6	M8 x 1.25	15	24	M20 x 1.5	1/8
25	22	19.5	17	32	10	26 $^{0}_{-0.033}$	13	10.5	8	45	6	33.5	5.5	8	M10 x 1.25	15	30	M26 x 1.5	1/8
32	22	19.5	17	32	12	26 $^{0}_{-0.033}$	13	10.5	8	45	6	37.5	5.5	10	M10 x 1.25	15	34.5	M26 x 1.5	1/8
40	24	21	22	41	14	32 $^{0}_{-0.039}$	16	13.5	11	50	8	46.5	7	12	M14 x 1.5	21.5	42.5	M32 x 2	1/4

(mm)

Bore size (mm)	S	TD	TT	TX	TY	TZ	Z	ZZ
20	62	8	10	32	32	52	36	116
25	62	9	10	40	40	60	40	120
32	64	9	10	40	40	60	40	122
40	88	10	11	53	53	77	44.5	154

Boss-cut Style (mm)

Bore size (mm)	ZZ
20	103
25	107
32	109
40	138

Head Side Trunnion Style (T)

CM2YT [Bore size] — [Stroke] [ ]

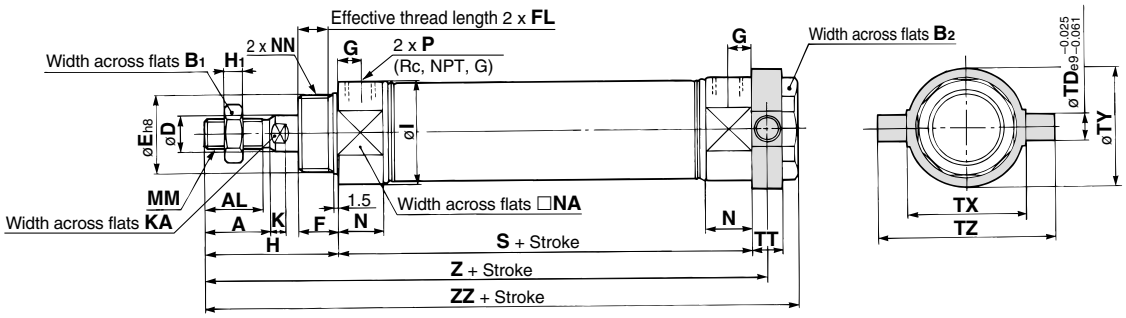

(mm)

Bore size (mm)	A	AL	B_1	B_2	D	E	F	FL	G	H	H_1	I	K	KA	MM	N	NA	NN	P
20	18	15.5	13	26	8	$20^{\ 0}_{-0.033}$	13	10.5	8	41	5	28	5	6	M8 x 1.25	15	24	M20 x 1.5	1/8
25	22	19.5	17	32	10	$26^{\ 0}_{-0.033}$	13	10.5	8	45	6	33.5	5.5	8	M10 x 1.25	15	30	M26 x 1.5	1/8
32	22	19.5	17	32	12	$26^{\ 0}_{-0.033}$	13	10.5	8	45	6	37.5	5.5	10	M10 x 1.25	15	34.5	M26 x 1.5	1/8
40	24	21	22	41	14	$32^{\ 0}_{-0.039}$	16	13.5	11	50	8	46.5	7	12	M14 x 1.5	21.5	42.5	M32 x 2	1/4

(mm)

Bore size (mm)	S	TD	TT	TX	TY	TZ	Z	ZZ
20	62	8	10	32	32	52	108	118
25	62	9	10	40	40	60	112	122
32	64	9	10	40	40	60	114	124
40	88	10	11	53	53	77	143.5	154

Clevis Integrated Style (E)

CM2YE [Bore size] — [Stroke] [ ]

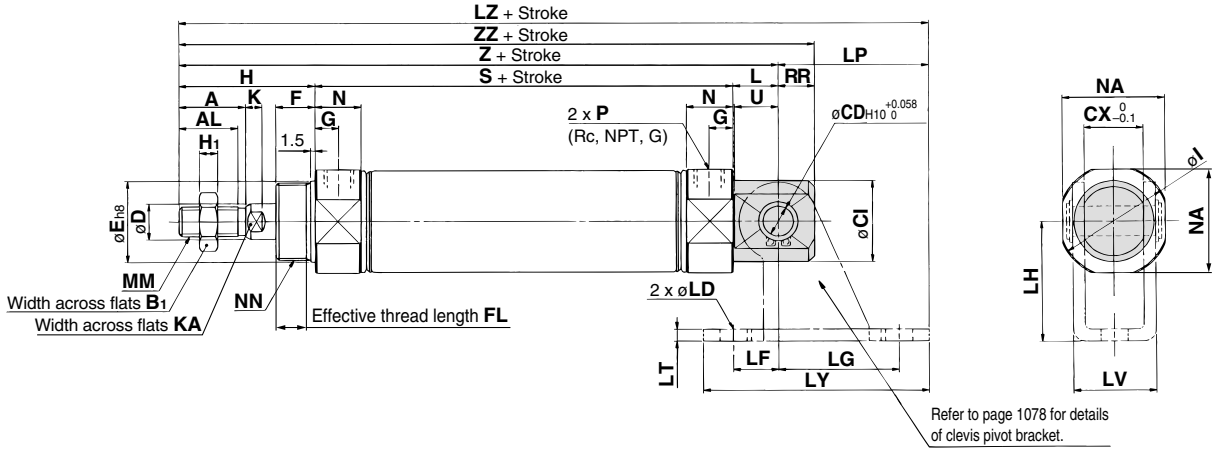

(mm)

Bore size (mm)	A	AL	B_1	CD	CI	CX	D	E	F	FL	G	H	H_1	I	K	KA	L	MM	N	NA	NN
20	18	15.5	13	8	20	12	8	$20^{\ 0}_{-0.033}$	13	10.5	8	41	5	28	5	6	12	M8 x 1.25	15	24	M20 x 1.5
25	22	19.5	17	8	22	12	10	$26^{\ 0}_{-0.033}$	13	10.5	8	45	6	33.5	5.5	8	12	M10 x 1.25	15	30	M26 x 1.5
32	22	19.5	17	10	27	20	12	$26^{\ 0}_{-0.033}$	13	10.5	8	45	6	37.5	5.5	10	15	M10 x 1.25	15	34.5	M26 x 1.5
40	24	21	22	10	33	20	14	$32^{\ 0}_{-0.039}$	16	13.5	11	50	8	46.5	7	12	15	M14 x 1.5	21.5	42.5	M32 x 2

(mm)

Bore size (mm)	P	RR	S	U	Z	ZZ
20	1/8	9	62	11.5	115	124
25	1/8	9	62	11.5	119	128
32	1/8	12	64	14.5	124	136
40	1/4	12	88	14.5	153	165

Accessory Bracket Dimensions

Single Knuckle Joint (mm)

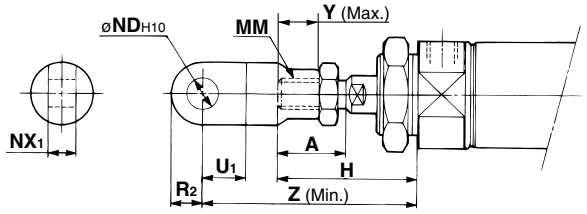

Bore size	A	H	MM	NDH10	NX1	U1	R2	Y	Z
20	18	41	M8 x 1.25	9 $^{+0.058}_{0}$	9 $^{-0.1}_{-0.2}$	14	10	11	66
25, 32	22	45	M10 x 1.25	9 $^{+0.058}_{0}$	9 $^{-0.1}_{-0.2}$	14	10	14	69
40	24	50	M14 x 1.5	12 $^{+0.070}_{0}$	16 $^{-0.1}_{-0.3}$	20	14	13	92

Single Knuckle Joint (mm)

I-020B, 032B Material: Rolled steel

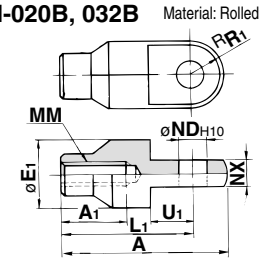

I-040B Material: Free cutting sulfur steel

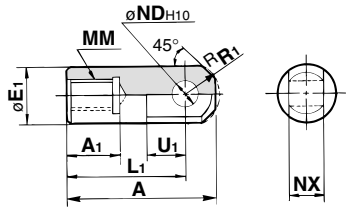

Part no.	Applicable bore size (mm)	A	A1	E1	L1	MM	NDH10	NX	R1	U1
I-020B	**20**	46	16	20	36	M8 x 1.25	9 $^{+0.058}_{0}$	9 $^{-0.1}_{-0.2}$	10	14
I-032B	**25, 32**	48	18	20	38	M10 x 1.25	9 $^{+0.058}_{0}$	9 $^{-0.1}_{-0.2}$	10	14
I-040B	**40**	69	22	24	55	M14 x 1.5	12 $^{+0.070}_{0}$	16 $^{-0.1}_{-0.3}$	15.5	20

Double Knuckle Joint (mm)

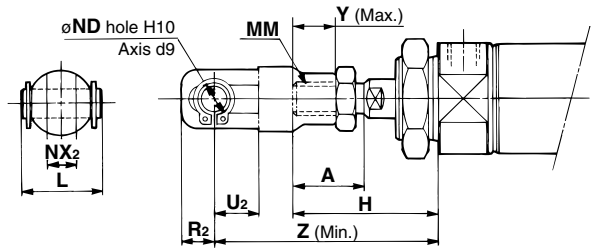

Bore size	A	H	L	MM	ND	NX2	R2	U2	Y	Z
20	18	41	25	M8 x 1.25	9	9 $^{+0.2}_{+0.1}$	10	14	11	66
25, 32	22	45	25	M10 x 1.25	9	9 $^{+0.2}_{+0.1}$	10	14	14	69
40	24	50	49.7	M14 x 1.5	12	16 $^{+0.3}_{+0.1}$	13	25	13	92

Double Knuckle Joint (mm)

Y-020B, Y-032B Material: Rolled steel

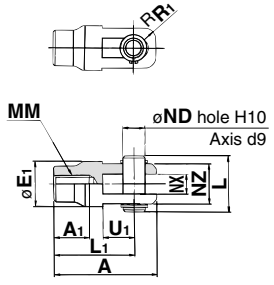

Y-040B Material: Cast iron

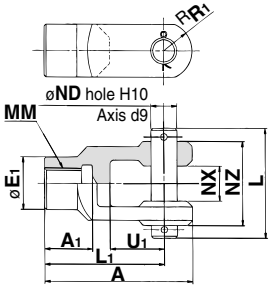

Part no.	Applicable bore size	A	A1	E1	L	L1	MM	ND	NX	NZ	R1	U1	Applicable pin part number	Retaining ring Cotter pin size
Y-020B	20	46	16	20	25	36	M8 x 1.25	9	9 $^{+0.2}_{+0.1}$	18	5	14	CDP-1	Type C 9 for axis
Y-032B	25, 32	48	18	20	25	38	M10 x 1.25	9	9 $^{+0.2}_{+0.1}$	18	5	14	CDP-1	Type C 9 for axis
Y-040B	40	68	22	24	49.7	55	M14 x 1.5	12	16 $^{+0.3}_{+0.1}$	38	13	25	CDP-3	ø3 x 18ℓ

∗ Clevis pin and retaining ring (cotter pin for ø40) are attached.

Double Clevis Pin/Material: Carbon steel (mm)

Bore size: ø20, ø25, ø32

CDP-1

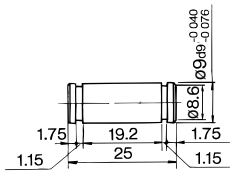

Retaining ring: Type C9 for axis

Bore size: ø40

CDP-2

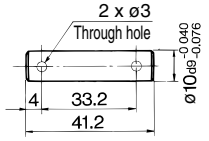

Cotter pin
ø3 x 18ℓ

∗ Retaining rings (cotter pins for ø40) are included.

Double Knuckle Pin/Material: Carbon steel (mm)

Bore size: ø20, ø25, ø32

CDP-1

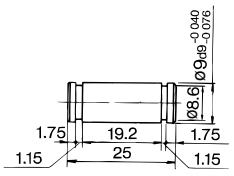

Retaining ring: Type C9 for axis

Bore size: ø40

CDP-3

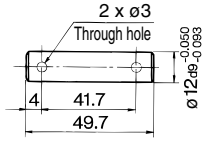

Cotter pin
ø3 x 18ℓ

∗ Retaining rings (cotter pins for ø40) are included.

Rod End Nut (mm)

Material: Carbon steel

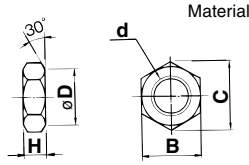

Part no.	Applicable bore size (mm)	B	C	D	d	H
NT-02	**20**	13	15.0	12.5	M8 x 1.25	5
NT-03	**25, 32**	17	19.6	16.5	M10 x 1.25	6
NT-04	**40**	22	25.4	21.0	M14 x 1.5	8

Mounting Nut (mm)

Material: Carbon steel

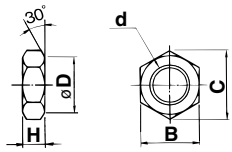

Part no.	Applicable bore size (mm)	B	C	D	d	H
SN-020B	**20**	26	30	25.5	M20 x 1.5	8
SN-032B	**25, 32**	32	37	31.5	M26 x 1.5	8
SN-040B	**40**	41	47.3	40.5	M32 x 2.0	10

Trunnion Nut (mm)

Material: Carbon steel

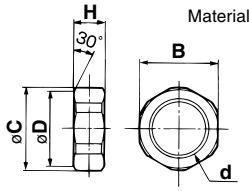

Part no.	Applicable bore size (mm)	B	C	D	d	H
TN-020B	**20**	26	28	25.5	M20 x 1.5	10
TN-032B	**25, 32**	32	34	31.5	M26 x 1.5	10
TN-040B	**40**	41	45	40.5	M32 x 2	10

Clevis Pivot Bracket (For CM2E) (mm)

Material: Rolled steel plate

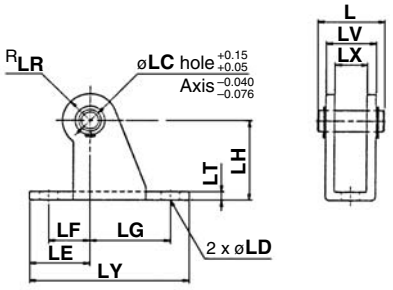

Part no.	Applicable bore size (mm)	L	LC	LD	LE	LF	LG	LH	LR	LT	LX	LY	LV	Applicable pin part no.
CM-E020B	**20, 25**	24.5	8	6.8	22	15	30	30	10	3.2	12	59	18.4	CD-S02
CM-E032B	**32, 40**	34	10	9	25	15	40	40	13	4	20	75	28	CD-S03

Note 1) Clevis bracket pins and retaining rings are included.
Note 2) It cannot be used for single clevis style (CM2C) and double clevis style (CM2D).

Clevis Pin (For CM2E) (mm)

Material: Carbon steel

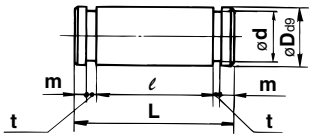

Part no.	Applicable bore size (mm)	D_{d9}	d	L	ℓ	m	t	Applicable retaining ring part no.
CD-S02	**20, 25**	$8^{-0.040}_{-0.076}$	7.6	24.5	19.5	1.6	0.9	Type C 8 for axis
CD-S03	**32, 40**	$10^{-0.040}_{-0.076}$	9.6	34	29	1.35	1.15	Type C 10 for axis

Note) Retaining rings are included.

Auto Switch Proper Mounting Position (Detection at Stroke End) and Its Mounting Height

Reed auto switch

D-A9□

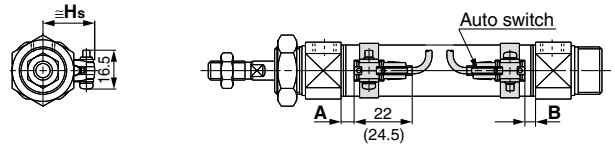

( ): For D-A93 type

D-C7/C8

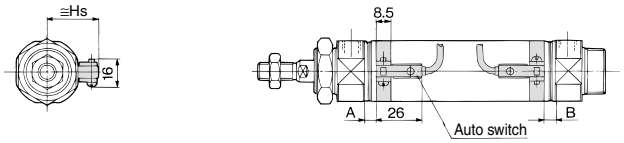

D-B5/B6/B59W

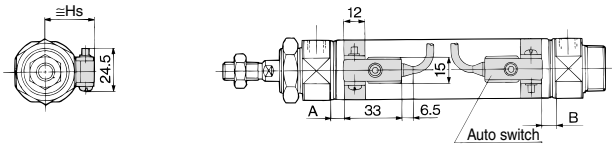

D-A33A/A34A

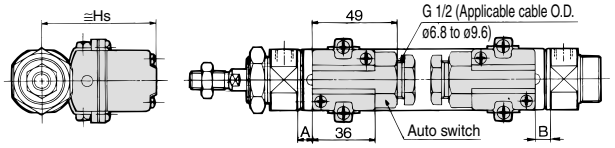

D-A44A

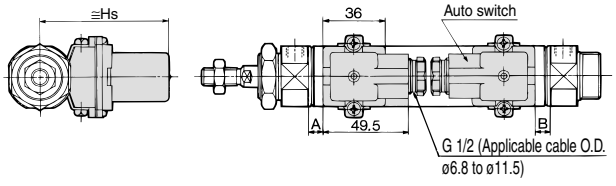

D-C73C/C80C

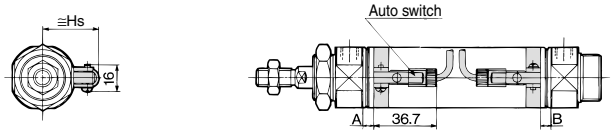

Solid state auto switch

D-M9□
D-M9□W

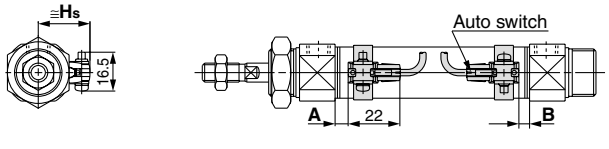

D-H7□/H7□W/H7NF

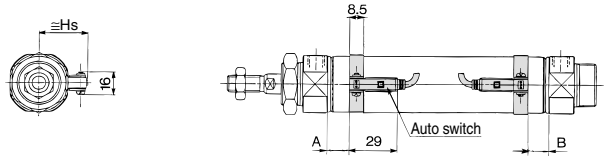

D-G5NTL

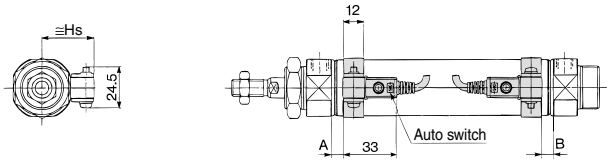

D-G39A/K39A

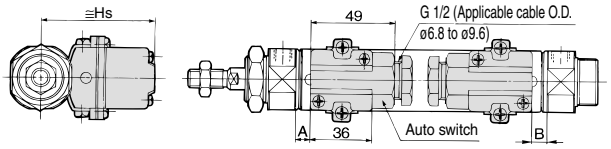

D-H7C

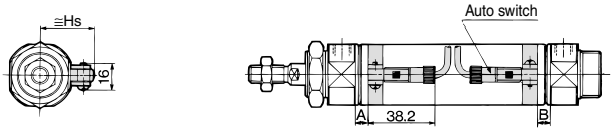

Auto Switch Proper Mounting Position (Detection at Stroke End) and Its Mounting Height

Auto Switch Proper Mounting Position

(mm)

Auto switch model / Bore size (mm)	D-A9□		D-M9□ D-M9□W		D-B5□ D-B64		D-C7□ D-C80 D-C73C D-C80C		D-B59W		D-A3□A D-G39A D-K39A D-A44A		D-H7□ D-H7C D-H7□W D-H7NF		D-G5NTL	
	A	B	A	B	A	B	A	B	A	B	A	B	A	B	A	B
20	6.5	5.5	10.5	9.5	1	0	7	6	4	3	0.5	0	6	5	2.5	1.5
25	6.5	5.5	10.5	9.5	1	0	7	6	4	3	0.5	0	6	5	2.5	1.5
32	7.5	6.5	11.5	10.5	2	1	8	7	5	4	1.5	0.5	7	6	3.5	2.5
40	13.5	11.5	17.5	15.5	7	6	13	12	10	9	6.5	5.5	12	11	8.5	7.5

Note) Adjust the auto switch after confirming the operating conditions in the actual setting.

Auto Switch Mounting Height

(mm)

Auto switch model / Bore size (mm)	D-A9□ D-M9□ D-M9□W	D-B5□ D-B64 D-B59W D-G5NTL D-H7C	D-C7□ D-C80 D-H7□ D-H7□W D-H7NF	D-C73C D-C80C	D-A3□A D-G39A D-K39A	D-A44A
	Hs	Hs	Hs	Hs	Hs	Hs
20	22	25.5	22.5	25	60	69.5
25	24.5	28	25	27.5	62.5	72
32	28	31.5	28.5	31	66	75.5
40	32	35.5	32.5	35	70	79.5

Minimum Auto Switch Mounting Stroke

n: No. of auto switch (mm)

Auto switch model	No. of auto switch mounted				
	1 pc.	2 pcs.		n pcs.	
		Different surfaces	Same surface	Different surfaces	Same surface
D-A9□ **D-M9□** **D-M9□W**	10	15 Note)	45 Note)	$15 + 45\frac{(n-2)}{2}$ (n = 2, 4, 6···)	45 + 45 (n-2)
D-C7□ **D-C80**	10	15	50	$15 + 45\frac{(n-2)}{2}$ (n = 2, 4, 6···)	50 + 45 (n-2)
D-H7□ **D-H7□W** **D-H7NF**	10	15	60	$15 + 45\frac{(n-2)}{2}$ (n = 2, 4, 6···)	60 + 45 (n-2)
D-C73C **D-C80C** **D-H7C**	10	15	65	$15 + 50\frac{(n-2)}{2}$ (n = 2, 4, 6···)	65 + 50 (n-2)
D-B5□/B64 **D-G5NTL**	10	15	75	$15 + 50\frac{(n-2)}{2}$ (n = 2, 4, 6···)	75 + 55 (n-2)
D-B59W	15	20	75	$20 + 50\frac{(n-2)}{2}$ (n = 2, 4, 6···)	75 + 55(n-2)
D-A3□A/G39A **D-K39A/A44A**	10	35	100	35 + 30(n-2)	100 + 100 (n-2)

Note) When 2 D-A93/M9□/M9□W auto switches are included.

Auto switch model	With 2 auto switches	
	Different surfaces	Same surface
	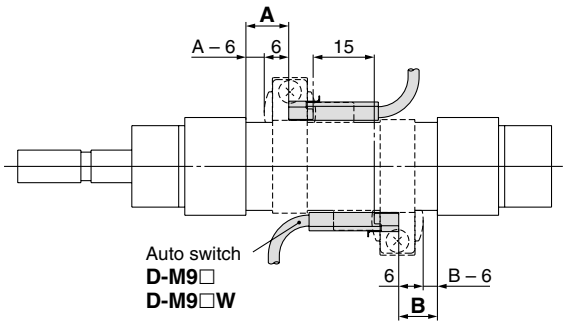 The proper auto switch mounting position is 6 mm inward from the switch holder edge.	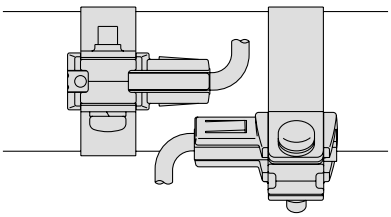 The auto switch is mounted by slightly displacing it in a direction (cylinder tube circumferential exterior) so that the auto switch and lead wire do not interfere with each other.
D-A93	—	Less than 50 strokes
D-M9□ **D-M9□W**	Less than 20 strokes	Less than 55 strokes

Operating Range

(mm)

Auto switch model	Bore size (mm)			
	20	**25**	**32**	**40**
D-A9□	6	6	6	6
D-M9□ **D-M9□W**	3.5	3	3.5	3
D-C7□/C80 **D-C73C/C80C**	7	8	8	8
D-B5□/B64 **D-A3□A/A44A**	8	8	9	9
D-B59W	12	12	13	13
D-H7□/H7□W **D-G5NTL/H7NF**	4	4	4.5	5
D-H7C	7	8.5	9	10
D-G39A/K39A	8	9	9	9

∗ Since this is a guideline including hysteresis, not meant to be guaranteed. (Assuming approximately ±30% dispersion) There may be the case it will vary substantially depending on an ambient environment.

Auto Switch Mounting Bracket Part No.

Auto switch model	Bore size (mm)			
	20	25	32	40
D-A9□ **D-M9□** **D-M9□W**	Note) ①BM2-020 ②BJ3-1	Note) ①BM2-025 ②BJ3-1	Note) ①BM2-032 ②BJ3-1	Note) ①BM2-040 ②BJ3-1
D-C7□/C80 **D-C73C/C80C** **D-H7□** **D-H7□W** **D-H7NF**	BM2-020	BM2-025	BM2-032	BM2-040
D-B5□/B64 **D-B59W** **D-G5NTL**	BA2-020	BA2-025	BA2-032	BA2-040
D-A3□A/A44A **D-G39A/K39A**	BM3-020	BM3-025	BM3-032	BM3-040

Note) Two kinds of auto switch mounting brackets are used as a set.

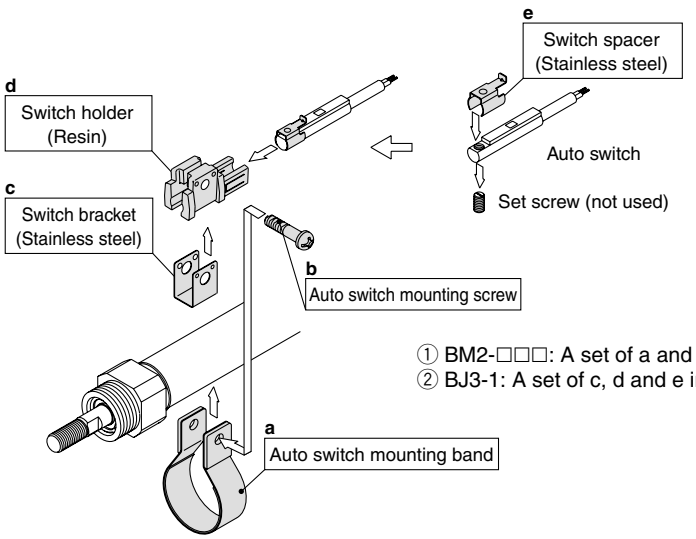

① BM2-□□□: A set of a and b in the figure.
② BJ3-1: A set of c, d and e in the figure.

Other than the applicable auto switches listed in "How to Order", the following auto switches can be mounted.
For detailed specifications, refer to pages 1719 to 1827.

Auto switch type	Model	Electrical entry (Direction)	Features
Reed	D-B53, C73, C76	Grommet (In-line)	—
	D-C80		Without indicator light
Solid state	D-H7A1, H7A2, H7B		—
	D-H7NW, H7PW, H7BW		Diagnostic indication (2-color indication)
	D-G5NTL		With timer

∗ With pre-wired connector is available for solid state auto switches. For details, refer to pages 1784 and 1785.
∗ Normally closed (NC = b contact), solid state auto switches (D-F9G, F9H type) are also available. For details, refer to page 1746.
∗ Wide range detection type, solid state auto switches (D-G5NBL type) are also available. Refer to page 1776 for details.

Smooth Cylinder
Specific Product Precautions 1

Be sure to read before handling.
Refer to front matters 42 and 43 for Safety Instructions and pages 3 to 11 for Actuator and Auto Switch Precautions.

Recommended Pneumatic Circuit

Refer to the diagrams below when controlling speed with the smooth cylinder.

⚠Warning

Horizontal operation (Speed control)

I

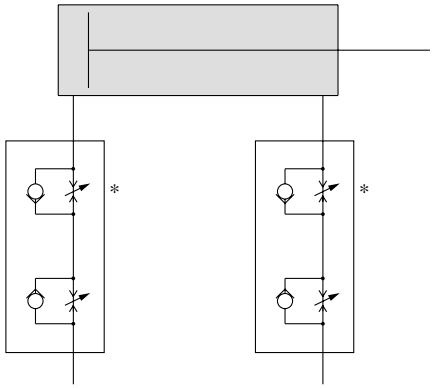

Dual speed controller

Speed is controlled by meter-out circuit. Using concurrently the meter-in circuit can alleviate the stick-slip. More stable low speed operation can be achieved than meter-in circuit alone.

II

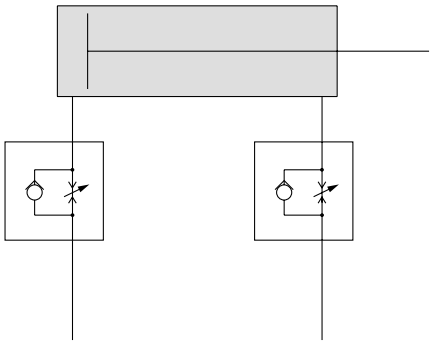

Meter-in speed controller

Meter-in speed controllers can reduce lurching while controlling the speed. The two adjustment needles facilitate adjustment.

Vertical operation (Speed control)

I

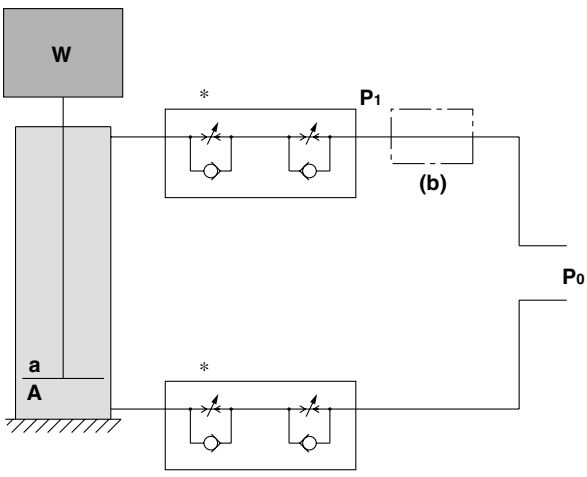

(1) Speed is controlled by meter-out circuit. Using concurrently the meter-in circuit can alleviate the stick-slip.*
(2) Depending on the size of the load, installing a regulator with check valve at position **(b)** can reduce lurching during descent and operation delay during ascent.
As a guide,
when **W + P0a>P0A**,
adjust **P1** to make **W + P1a = P0A**.

II

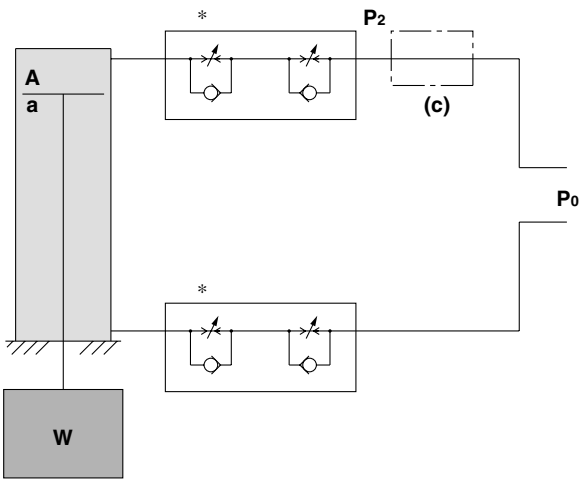

(1) Speed is controlled by meter-out circuit. Using concurrently the meter-in circuit can alleviate the stick-slip.*
(2) Installing a regulator with check valve at position **(c)** can reduce lurching during descent and operation delay during ascent.
As a guide,
adjust **P2** to make **W + P2A = P0a**.

W: Load (N) **P0**: Operating pressure (MPa) **P1, P2**: Reduced pressure (MPa) **a**: Rod side piston area (mm^2) **A**: Head side piston area (mm^2)

Smooth Cylinder
Specific Product Precautions 2

Be sure to read before handling.
Refer to front matters 42 and 43 for Safety Instructions and pages 3 to 11 for Actuator and Auto Switch Precautions.

Lubricant

⚠Caution

1. Operate without lubrication.

Lubrication may cause malfunction.

2. Do not use grease not specified by SMC.

Using grease other than that specified may cause malfunction.

- Order using the following part numbers when only maintenance grease is needed.

Grease

Volume	Part no.
5 g	GR-L-005
10 g	GR-L-010
150 g	GR-L-150

3. Do not wipe off grease from the sliding part of the air cylinder.

Wiping grease from the sliding part of the air cylinder forcefully may cause malfunction.

Air Source

⚠Caution

1. Take measure to prevent pressure fluctuations.

Pressure fluctuations may cause malfunction.

How to Order

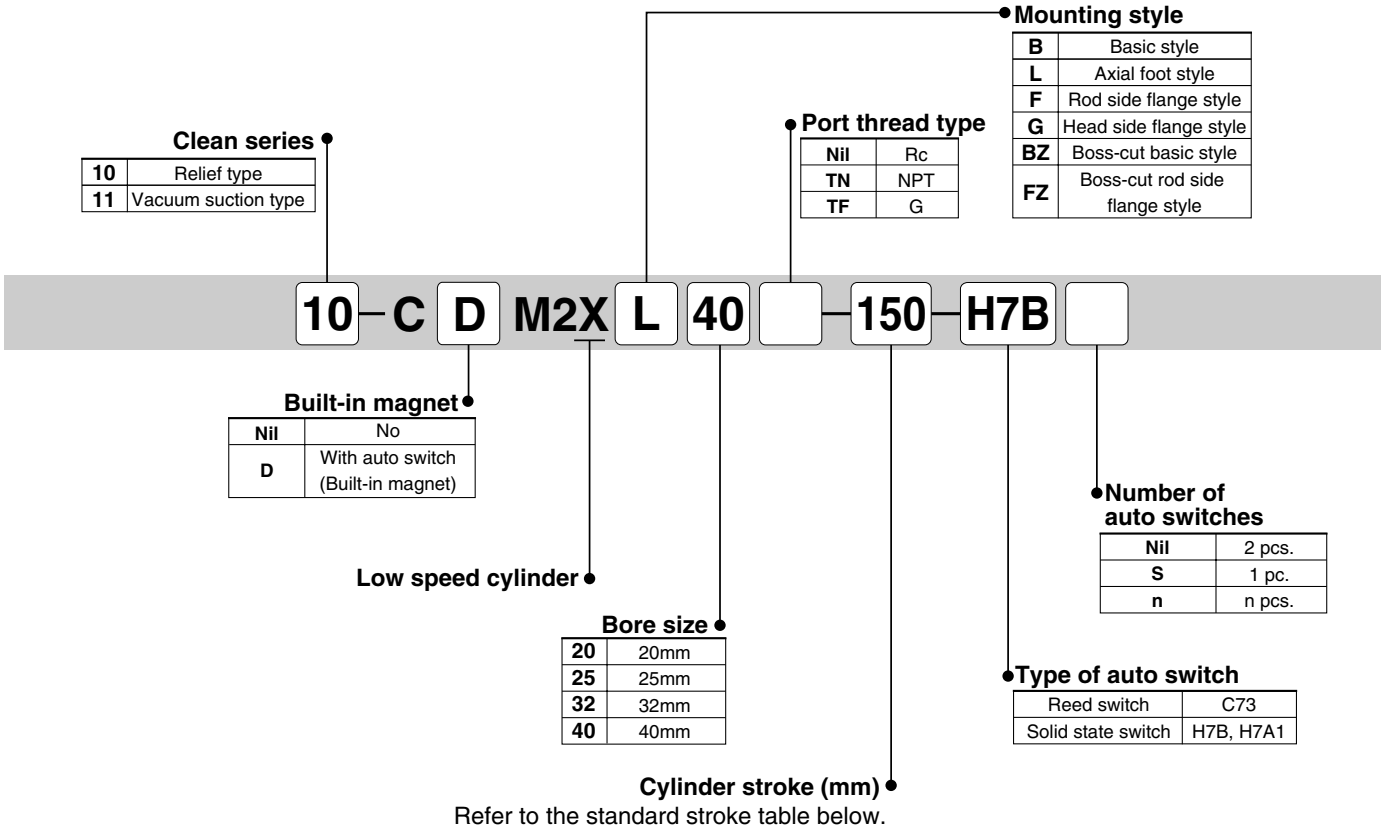



Model

	Model	Bore size (mm)	Port size	Lubrication	Action	Standard stroke (mm)	Auto switch mounting	Cushion	
								Rubber	Air
Relief type	**10-CM2X□20**	20	1/8	Non-lube	Double acting single rod	25, 50, 75, 100, 125 150, 200, 250, 300	○	○	—
	10-CM2X□25	25							
	10-CM2X□32	32							
	10-CM2X□40	40	1/4						
Vacuum suction type	**11-CM2X□20**	20	1/8						
	11-CM2X□25	25							
	11-CM2X□32	32							
	11-CM2X□40	40	1/4						

Specifications

Bore size (mm)	10- (Relief type)				11- (Vacuum suction type)			
	20	25	32	40	20	25	32	40
Fluid	Air							
Proof pressure	1.5 MPa							
Max. operating pressure	1.0 MPa							
Min. operating pressure	0.035 MPa				0.025 MPa			
Ambient and fluid temperature	Without auto switch : –10°C to 70°C (With no freezing)							
	With auto switch : –10 to 60°C (With no freezing)							
Cushion	Rubber bumper							
Piston speed	1 to 200 mm/s				0.5 to 200 mm/s			
Piston rod diameter	ø8	ø10	ø12	ø14	ø8	ø10	ø12	ø14
Rod end thread	M8 x 1.25	M10 x 1.25		M14 x 1.5	M8 x 1.25	M10 x 1.25		M14 x 1.5
Rod end thread tolerance	JIS Class 2							
Stroke tolerance	$^{+1.4}_{0}$ mm							
Port size	1/8			1/4	1/8			1/4
Vacuum suction port, Relief port	M5 x 0.8							
Grease	Fluorine grease							
Particle generation grade	Grade 2				Grade 1			
Suction flow rate (Reference values)	—				2 ℓ/min (ANR)			

External dimensions and applicable auto switches are the same as 10-/11-CM2. Please refer to pages 15 to 20.

Specific Product Precautions

Be sure to read before handling.

Precautions

⚠ Warning

1. Do not rotate the cover.

When installing a cylinder or screwing a pipe fitting into the port, the coupling portion of the cover could break if the cover is rotated.

⚠ Caution

1. Be careful of the snap ring to pop out.

When replacing the rod seal, take care that the snap ring does not spring out while you are removing it.

Maintenance

⚠ Caution

1. Grease pack

Use the following part number to order grease for maintenance.
Grease pack
GR-X-005 (5g)

Actuator / Common Precautions 1

Be sure to read before handling. Refer to the main text for precautions for each series.

Precaution on designing

⚠ Warning

1. There is a possibility of dangerous sudden action by air cylinders if sliding parts of machinery are twisted due to external forces, etc.
In such cases, personal injury by catching hands or feet in the machinery, or damage to the machinery itself may occur. Therefore, the machine should be adjusted to operate smoothly and designed to avoid such dangers.

2. A protective cover is recommended to minimize the risk of personal injury.
If a driven object and moving parts of a cylinder are in close proximity, personal injury may occur. Design the structure to avoid contact with the human body.

3. Securely tighten all stationary parts and connected parts so that they will not become loose.
Particularly when a cylinder operates at a high frequency or is installed in a place where there is a lot of vibration, ensure that all parts remain secure.

4. A deceleration circuit may be required.
When a driven object is operated at high speed or the load is heavy, a cylinder's cushion will not be sufficient to absorb the impact. Install a deceleration circuit to reduce the speed before cushioning to relieve the impact.
In this case, the rigidity of the machinery should also be examined.

5. Consider a possible drop in circuit pressure due to a power outage, etc.
When a cylinder is used in a clamping mechanism, there is a danger of workpiece dropping if there is a decrease in clamping force due to a drop in circuit pressure caused by a power outage, etc. Therefore, safety equipment should be installed to prevent damage to machinery and personal injury. Suspension mechanisms and lifting devices also require consideration for drop prevention.

6. Consider a possible loss of power source.
Measures should be taken to avoid personal injury and equipment damage in the event that there is a loss of power to equipment controlled by pneumatics, electricity, or hydraulics.

7. Design circuitry to prevent the sudden lurching of driven objects.
When a cylinder is driven by an exhaust center type directional control valve or when it is started up after residual pressure is exhausted from the circuit, etc., the piston and its driven object will lurch when the cylinder is operated at high speed if pressure is applied to one side of the cylinder, due to the absence of air pressure inside the cylinder. Therefore, equipment should be selected and circuits should be designed to prevent this sudden lurching, because there is a danger of personal injury and/or damage to equipment when this occurs.

8. Consider emergency stops.
Design the machinery so that personal injury and/or damage to machinery and equipment will not occur when the machinery is stopped by a safety device under abnormal conditions, such as a power outage or a manual emergency stop.

9. Consider the action when operation is restarted after an emergency stop or abnormal stop.
Design the machinery so that personal injury or equipment damage will not occur upon restart of operation.
When the cylinder has to be reset at the start position, install safety manual control equipment.

Selection

⚠ Warning

1. Confirm the specifications.
The products featured in this catalog are designed for use in industrial compressed air systems. If the products are used in conditions where pressure and/or temperature are outside the range of specifications, damage and/or malfunctions may occur. Do not use in these conditions. (Refer to the specifications).
Please consult with SMC if you use a fluid other than compressed air.

2. Intermediate Stops
With a 3-position closed center type valve, it is difficult to accurately and precisely stop a piston at the required position in the same way as can be done with hydraulic pressure due to the compressibility of air.
Furthermore, since valves and cylinders, etc. are not guaranteed for zero air leakage, it may not be possible to hold a stopped position for an extended period of time. Please contact with SMC when it is necessary to hold a stopped position for an extended period of time.

⚠ Caution

1. Operate within the limits of the maximum feasible stroke.
Operation that exceeds the maximum stroke may damage a piston rod. Refer to the air cylinder model selection procedures for the maximum feasible strokes.

2. Operate a cylinder within a range such that collision damage will not occur to a piston at the stroke end.
Operate a cylinder within a range so that a piston having inertial force will not be damaged when it collides against the cover at the stroke end. Refer to the air cylinder model selection procedures for the maximum feasible strokes.

3. Use a speed controller to adjust the cylinder speed, gradually increasing from a low speed to the desired speed setting.

4. Provide intermediate supports for long stroke cylinders.
An intermediate support should be provided in order to prevent damage to a long stroke cylinder, due to problems such as sagging of the rod, deflection of the cylinder tube, vibration and external load.

Actuator / Common Precautions 2

Be sure to read before handling. Refer to the main text for precautions for each series.

Mounting

⚠ Caution

1. Be certain to match the rod shaft center with the load and direction of movement when connecting.
When not properly matched, problems may arise with the rod and tube, and damage may be caused due to friction on areas such as the inner tube surface, bushings, rod surface, and seals.

2. When using an external guide, connect the rod end and the load in such a way that there is no interference at any point within the stroke.

3. Do not scratch or gouge the sliding portion of the cylinder tube or the piston rod by striking it with an object, or squeezing it.
The tube bore is manufactured under precise tolerances. Thus, even a slight deformation could lead to a malfunction.
Moreover, scratches or gouges, etc. in the piston rod may lead to damaged seals and cause air leakage.

4. Do not use until you verify that the equipment can operate properly.
After mounting, repairs, or modification, etc., connect the air supply and electric power, and then confirm proper mounting by means of appropriate function and leak tests.

5. Instruction manual
Install the products and operate them only after reading the instruction manual carefully and understanding its contents.
Also keep the manual where it can be referred to as necessary.

Cushion

⚠ Caution

1. Readjust with a cushion needle.
Cushions are adjusted at the time of shipment; however, the cushion needle on the cover should be readjusted, when the product is put into service based on factors such as the size of the load and the operating speed. When the cushion needle is turned clockwise, the restriction becomes smaller and the cushion's effectiveness is increased. Tighten the lock nut securely after adjustment is performed.

2. Do not operate the actuator with the cushion needle fully closed.
This could damage the seals.

Air Supply

⚠ Warning

1. Use clean air.
Do not use compressed air which contains chemicals, synthetic oil containing organic solvents, salts or corrosive gases, etc. as this may cause damage or malfunction.

⚠ Caution

1. Install air filters.
Install air filters close to valves at their upstream side. A filtration degree of 5μm or less should be selected.

2. Install an aftercooler, air dryer, or water separator (Drain Catch).
Compressed air that includes excessive drainage may cause malfunction of valves and other pneumatic equipment. To prevent this, install an air dryer, aftercooler or water separator (drain catch), etc.

3. Use the product within the specified range of fluid and ambient temperature.
Take measures to prevent freezing at temperature below 5°C, since moisture in circuits may freeze and cause damage to seals and lead to malfunctions.

Actuator / Common Precautions 3

Be sure to read before handling. Refer to the main text for precautions for each series.

Operating Environment

⚠ Warning

1. **Do not use in atmospheres or locations where corrosion hazards exist.**
   Refer to the construction drawings regarding cylinder materials.
2. **In locations where ultrapure water or cleaning solvent, etc. splashes on the equipment, take suitable measures to protect the rod.**

Maintenance

⚠ Warning

1. **Perform maintenance procedures as shown in the instruction manual.**
   Improper handling may result in malfunction and damage of machinery or equipment.
2. **Removal of equipment, and supply / exhaust of compressed air**
   Before any machinery or equipment is removed, first ensure that the appropriate measures are in place to prevent the fall or erratic movement of driven objects and equipment, then cut off the electric power and release the compressed air in the system.
   When machinery is restarted, proceed with caution after confirming that appropriate measures are in place to prevent cylinders from sudden movement.

⚠ Caution

1. **Drain flushing**
   Remove drainage from air filters regularly.

Auto switch / Common Precautions 1

Be sure to read before handling. Refer to the main text for precautions for each series.

Design/Selection

⚠ Warning

1. Confirm the specifications.

Read the specifications carefully and use this product appropriately. The product may be damaged or malfunction if it is used outside the specifications of current voltage, temperature or impact.

2. Use caution when multiple cylinders are used in close proximity to each other.

When two or more auto switch cylinders are lined up in close proximity to each other, magnetic field interference may cause the switches to malfunction. Maintain a minimum cylinder separation of 40mm. (When the allowable interval is specified for each cylinder series, use the indicated value.)

3. Use caution to the ON time of a switch at the intermediate position of stroke.

When an auto switch is placed at an intermediate position of the stroke and a load is driven at the time the piston passes, the auto switch will operate, but if the speed is too fast, the operating time will be shortened and the load may not operate properly. The maximum detectable piston speed is :

$$V\ (mm/s) = \frac{\text{Auto switch operation range (mm)}}{\text{Load operating time (ms)}} \times 1000$$

In cases of high piston speed, the use of an auto switch (D-F5NT, F7NT, G5NT and M5□T) with a built-in OFF delay timer (approx. 200ms) makes it possible to extend the load operating time.

4. Wiring should be kept as short as possible.

<Reed switch>

As the length of the wiring to a load gets longer, the rush current at switching ON becomes greater, and this may shorten the product's life. (The switch will stay ON all the time).

1) For an auto switch without a contact protection circuit, use a contact protection box when the wire length is 5m or longer.
2) Even if an auto switch has a built-in contact protection circuit, when the wiring is more than 30m long, it is not able to adequately absorb the rush current and its life may be reduced. It is again necessary to connect a contact protection box in order to extend its life. Please contact SMC in this case.

<Solid state switch>

3) Although wire length should not affect switch function, use a wire 100m or shorter.

5. Use caution to internal voltage drop of a switch.

<Reed switch>

1. Switches with an indicator light (except D-A56/A76H/ A96/A96V/C76/E76A/Z76)

- If auto switches are connected in series as shown below, please note that there will be a large voltage drop because of internal resistance in the light emitting diodes. (Refer to internal voltage drop in the auto switch specifications.)
- [The voltage drop will be "n" times larger when "n" auto switches are connected.]

The load may be ineffective even though the auto switch function is normal.

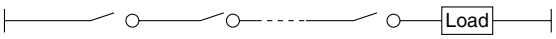

- Similarly, when operating below a specified voltage, it is possible that the load may be ineffective even though the auto switch function is normal. Therefore, the formula below should be satisfied after confirming the minimum operating voltage of the load.

Power voltage – Internal voltage drop of switch > Minimum operating voltage of load

2) If the internal resistance of a light emitting diode causes a problem, select a switch without an indicator light (D-A6□, A80, A80H, A90, A90V, C80, R80, 90, E80A, Z80).

<Solid state switch>

3) Generally, the internal voltage drop will be greater with a 2-wire solid state auto switch than with a reed switch. Take the same precautions as in 1).

Also please note that a 12VDC relay is not applicable.

6. Use caution to the leakage current.

<Solid state switch>

With a 2-wire solid state auto switch, current (leakage current) flows to the load to operate the internal circuit even when in the OFF state.

Current to operate load (OFF condition) > Leakage current

If the condition given in the above formula is not met, it will not reset correctly (stays ON). Use a 3-wire switch if this specification cannot be satisfied.

Moreover, leakage current flow to the load will be "n" times larger when "n" auto switches are connected in parallel.

7. Do not use a load that generates surge voltage.

<Reed switch>

When driving a load such as a relay that generates a surge voltage, use a switch with a built-in contact protection circuit or a contact protection box.

<Solid state switch>

Although a zener diode for surge protection is connected to the output side of a solid state auto switch, damage may still occur if the surge is applied repeatedly. When a load, such as a relay or solenoid, which generates surge is directly driven, use a type of switch with a built-in surge absorbing element.

8. Cautions for use in an interlock circuit

When an auto switch is used for an interlock signal requiring high reliability, devise a double interlock system to avoid trouble by providing a mechanical protection function, or by also using another switch (sensor) together with the auto switch.

Also perform periodic maintenance inspections and confirm proper operation.

9. Ensure sufficient space for maintenance activities.

When designing an application, be sure to allow sufficient space for maintenance and inspection.

Auto switch / Common Precautions 2

Be sure to read before handling. Refer to the main text for precautions for each series.

Mounting/Adjustment

⚠ Warning

1. Do not drop or bump.

Do not drop, bump, or apply excessive impacts (300m/s^2 or more for reed switches and 1000m/s^2 or more for solid state switches) while handling. Although the body of the switch may not be damaged, the inside of the switch could be damaged and cause a malfunction.

2. Do not carry a cylinder by the auto switch lead wires.

Never carry a cylinder by its lead wires. This may not only cause broken lead wires, but it may cause internal elements of the switch to be damaged by the stress.

3. Mount switches using the proper tightening torque.

When a switch is tightened beyond the range of tightening torque, the mounting screws or switch may be damaged.

On the other hand, tightening below the range of tightening torque may allow the switch to slip out of position.

4. Mount a switch at the center of the operating range.

Adjust the mounting position of an auto switch so that the piston stops at the center of the operating range (the range in which a switch is ON). (The mounting positions shown in the catalog indicate the optimum position at the stroke end.) If mounted at the end of the operating range (around the borderline of ON and OFF), the operation will be unstable.

<D-M9□>

If this auto switch replaces the conventional model, it may not function depending on the application (shown below) because its operation range is shorter.

- **Applications where at the end, the stopping position shifting range is larger than the operation range**
  e.g. Workpiece pushing, pressing into a hole, or clamping
- **Applications where an auto switch is used to detect intermediate stopping positions (Detecting time is shortened).**

As indicated above, mount a switch at the center of the operating range.

Wiring

⚠ Warning

1. Avoid repeatedly bending or stretching lead wires.

Broken lead wires will result from repeatedly applying bending stress or stretching force to lead wires.

2. Be sure to connect the load before power is applied.

<2-wire type>

If the power is turned on when an auto switch is not connected to a load, the switch will be instantly damaged because of excess current.

3. Confirm proper insulation of wiring.

Be certain that there is no faulty wiring insulation (contact with other circuits, ground fault, improper insulation between terminals, etc.). Damage may occur due to excess current flow into a switch.

4. Do not wire with power lines or high voltage lines.

Wire separately from power lines or high voltage lines, avoiding parallel wiring or wiring in the same conduit with these lines. Control circuits, including auto switches, may malfunction due to

Wiring

⚠ Warning

5. Do not allow short circuiting of loads.

<Reed switch>

If the power is turned on with a load in a short circuited condition, the switch will be instantly damaged because of excess current flow into the switch.

<Solid state switch>

Models M-F9□(V), F9□W(V), J51, G5NB and all models of PNP output switches do not have built-in short circuit prevention circuits. If loads are short circuited, the switches will be instantly damaged.

Use caution to avoid reverse wiring with the brown power supply line and the black output line on 3 -wire type switches.

6. Avoid incorrect wiring.

<Reed switch>

A 24VDC switch with indicator light has polarity. The brown lead wire or terminal No.1 is (+), and the blue lead wire or terminal No.2 is (–).

[In the case of model D-97, the side without indicator is (+) and the blue line side is (–).]

1) If connections are reversed, a switch will operate, however, the light emitting diode will not light up.
   Also please note that a current greater than the maximum specified one will damage a light emitting diode and make it inoperable.
   Applicable models
   D-A73, A73H, A73C, C73, C73C, E73A, Z73, R73
   D-97, 93A, A93, A93V
   D-A33, A34, A33A, A34A, A44, A44A
   D-A53, A54, B53, B54

2) However, when using a 2 color indication auto switch (D-A79W, A59W, B59W), be aware that the switch will constantly remain ON if the connections are reversed.

<Solid state switch>

1) If connections are reversed on a 2-wire type switch, the switch will not be damaged if protected by a protection circuit, but the switch will always stay in an ON state. However, it is still necessary to avoid reversed connections, since the switch could be damaged by a load short circuit in this condition.

2) If connections are reversed (power supply line (+) and power supply line (–) on a 3-wire type switch, the switch will be protected by a protection circuit. However, if the power supply line (+) is connected to the blue wire and the power supply line (–) is connected to the black wire, the switch will be damaged.

<D-M9□>

D-M9□ does not have built-in short-circuit prevention circuits. Reverse connection of power supply line (+) and (–) may damage the switch.

Auto switch / Common Precautions 3

Be sure to read before handling. Refer to the main text for precautions for each series.

Environment

⚠Warning

1. Never use in the presence of explosive gases.

Our auto switches are not explosion proof. Never use them in the presence of explosive gas, as this may cause a serious explosion.

2. Do not use in an area where a magnetic field is generated.

Auto switches will malfunction or magnets inside cylinders will become demagnetized. (Please consult with SMC regarding the availability of a magnetic field resistant auto switch.)

3. Do not use in environments where the auto switches will be constantly exposed to water.

Although switches except D-A3□/A44□/G39□/K39□ satisfy the IEC standard IP67 structure (JIS C 0920: anti-immersion structure), do not use switches in applications where continually exposed to water splash or spray. Poor insulation or swelling of the potting resin inside switches may cause malfunction.

4. Do not use in environments with oil or chemicals.

Please consult with SMC if auto switches will be used in an environment with coolants, cleaning solvents, various oils or chemicals. If auto switches are used under these conditions for even a short time, they may be adversely affected by improper insulation, a malfunction due to swelling of the potting resin, or hardening of the lead wires.

5. Do not use in environments with temperature cycles.

Please consult with SMC if switches are to be used where there are temperature cycles other than normal temperature changes, as they may be adversely affected internally.

6. Do not use in environments where there is excessive impact shock.

<Reed switch>

When excessive impact (300 m/s^2 or more) is applied to a reed switch during operation, the contact point may malfunction and generate or cut off a signal momentarily (1ms or less). Please consult with SMC regarding the need to use a solid state switch depending on the environment.

7. Do not use in locations where surges are generated.

<Solid state switch>

When there are units (solenoid type lifters, high frequency induction furnaces, motors, etc.) which generate a large amount of surge in the area around cylinders with solid state auto switches, this may cause deterioration or damage to the switches. Avoid sources of surge generation and crossed lines.

8. Avoid close contact with magnetic substances.

When a magnetic substance (substance attracted by a magnet) is brought into close proximity with an auto switch cylinder, it may cause the auto switches to malfunction due to a loss of the magnetic force inside the cylinder.

Maintenance

⚠Warning

1. Perform the following maintenance periodically in order to prevent possible danger due to unexpected auto switch malfunction.

1) Securely tighten switch mounting screws.
If screws become loose or the mounting position is dislocated, retighten screws securely after readjusting the mounting position.

2) Confirm that there is no damage to lead wires.
To prevent faulty insulation, replace switches or repair lead wires if damage is discovered.

3) Confirm that the green light on the 2-color indicator type switch lights up.
Confirm that the green LED is ON when stopped at the set position. If the red LED is ON when stopped at the set position, the mounting position is not appropriate. Readjust the mounting position until the green LED lights up.

Other

⚠Warning

1. Please consult with SMC concerning water resistance, elasticity of lead wires, etc.

∗Lead wire color changes

Lead wire colors of SMC auto switches have been changed in order to meet NECA (Nippon Electric Control Equipment Industries Association) Standard 0402 for production beginning September, 1996 and thereafter.Special care should be taken regarding wire polarity during the time that both old and new colors exist.

2-wire system

	Old	New
Output (+)	Red	Brown
Output (–)	Black	Blue

3-wire system

	Old	New
Power supply +	Red	Brown
Power supply GND	Black	Blue
Output	White	Black

Solid state with diagnostic output

	Old	New
Power supply +	Red	Brown
Power supply GND	Black	Blue
Output	White	Black
Diagnostic output	Yellow	Orange

Solid state with latch type diagnostic output

	Old	New
Power supply +	Red	Brown
Power supply GND	Black	Blue
Output	White	Black
Latch type diagnostic output	Yellow	Orange

⚠Caution

1. When stripping the cable clad, take care with the orientation of the cable being stripped. The insulator may accidentally be torn or damaged depending on the orientation.(D-M9□ only)

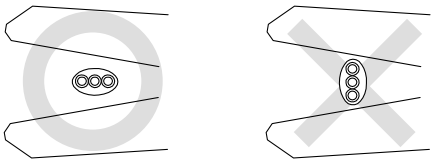

Recommended tools are shown below.

Manufacturer	Model name	Model no.
VESSEL	Wire stripper	No 3000G
TOKYO IDEAL	Strip master	45-089

∗ Stripper for round cable (ø2.0) can be used for a 2-wire type cable.

Cylinder
Applicable auto switch list

	Cylinder series	CDJ2		CDM2	CDBM2	CDG1		CDA2	CUJ	CDU	CDQS	CDQ2	REC	CXSJ	CXS	MGP	MGF	MXP	MXQ	MXS	CYP	CDQSX	CDQ2X	CDM2X
	Bore size	ø6	ø10/ø16	ø20 to ø40	ø20 to ø40	ø20 to ø63	ø80/ø100	ø40 to ø63	ø6 to ø10	ø6 to ø25	ø12 to ø25	ø32 to ø100	ø20 to ø40	ø6-ø10	ø6 to ø32	ø12 to ø63	ø40/ø63/ø100	ø6 to ø16	ø6 to ø25	ø6 to ø25	ø15/ø32	ø12 to ø25	ø32 to ø63	ø20 to ø40
Reed switch	D-C7/C8	■	■	■	■	■							■											■
	D-C73C/C80C	■	■	■	■	■							■											■
	D-B5/B6			■	■	■	■	■					■											■
	D-B59W			■	■	■	■	■					■											■
	D-A3/A4							■					■											
	D-A3□A/A44A			■	■																			■
	D-A3□C/A44C							■																
	D-A7/A8		■									■											■	
	D-A7□H/A80H		■									■											■	
	D-A73C/A80C		■									■											■	
	D-A79W		■									■											■	
	D-A5/A6							■																
	D-A59W							■																
	D-A9	✻	✻	✻	✻	✻	✻	✻		■	■	■	✻	■		✻		■	■	■		■	■	✻
	D-A9□V							✻		■	■	■		■		✻								
	D-Z7/Z8							■							■	■	■				■			
Solid state switch	D-H7	■	■	■	■	■							■											■
	D-H7C	■	■	■	■	■							■											■
	D-H7BAL	■	■	■	■	■							■											
	D-H7□F	■	■	■	■	■							■											■
	D-H7□W	■	■	■	■	■							■											■
	D-G5/K5						■	■																
	D-G5BAL				■		■	■																
	D-G59F						■	■																
	D-G5NTL			■	■		■	■					■											
	D-G5□W/K59W						■	■																
	D-G39/K39							■					■											
	D-G39A/K39A			■	■																			■
	D-F7/J7		■									■											■	
	D-J79C		■									■											■	
	D-F7□F		■									■											■	
	D-F7BAL		■									■											■	
	D-F7BAVL		■									■											■	
	D-F7□V		■									■											■	
	D-F7NTL		■									■											■	
	D-F7□W (V)		■									■											■	
	D-F5/J5							■																
	D-F5BAL							■																
	D-F5□W/J59W							■																
	D-F5□F							■																
	D-F5NTL							■																
	D-G39C/K39C							■																
	D-M9	✻	✻	✻	✻	✻	✻	✻	■	■	■	■	✻	■		✻		■	■	■		■	■	✻
	D-M9□V							✻	■	■	■	■		■		✻		■	■	■		■	■	
	D-F9□W	✻	✻	✻	✻	✻	✻	✻		■	■	■	✻	■		✻		■	■	■		■	■	✻
	D-F9□WV							✻		■	■	■		■		✻		■	■	■		■	■	
	D-F9BAL							✻			■	■		■		✻						■	■	
	D-Y59A/Y7P/Y59B							■							■	■	■				■			
	D-Y69A/Y7PV/Y69B							■							■	■	■				■			
	D-Y7□W							■							■	■	■				■			
	D-Y7□WV							■							■	■	■				■			
	D-Y7BAL							■								■	■							
	D-P5□WL							■				■				■								
	D-F9G/H	✻	✻	✻	✻	✻	✻	✻		■	■	■	✻	■		✻		■	■	■		■	■	✻
	D-Y7G/H							■							■	■	■				■			
	D-G5NBL			■			■	■																
	D-F8□								■															

Please refer to the next page for applicable auto switches and cylinders in the fields marked with asterisks (✻).

Compact auto switch mounting bracket

Mounting brackets used for installing the compact auto switches D-A9/M9/F9 onto band mounting / tie-rod mounting / groove mounting style cylinders are available.

Band mounting



Applicable cylinder
10-/11-/21-/22-CDJ2 Series
10-/11-/21-/22-CDM2 Series
10-/11-/21-/22-CDG1 Series
10-/11-REC Series
10-/11-CDM2X Series

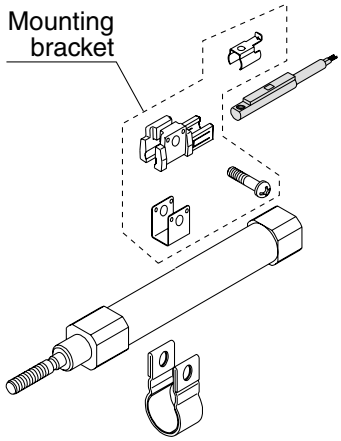

Applicable auto switch

Solid state switch
D-M9
D-F9□W (2-color indication)

Reed switch
D-A9

Perpendicular entry is unavailable.

Tie-rod mounting



Applicable cylinder
10-/11-/21-/22-CDA2 Series

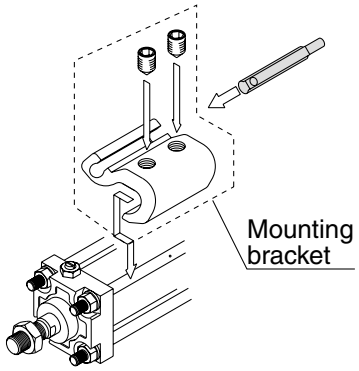

Applicable auto switch

Solid state switch
D-M9/M9□V
D-F9□W/F9□WV (2-color indication)
D-F9BAL (water resistant type)

Reed switch
D-A9/D-A9□V

Groove mounting



Applicable cylinder
12-/13-/21-/22-MGP Series

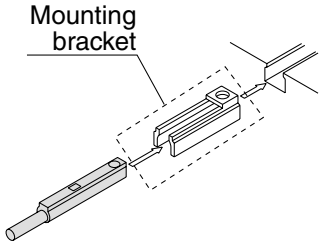

Safety Instructions

These safety instructions are intended to prevent hazardous situations and/or equipment damage. These instructions indicate the level of potential hazard with the labels of **"Caution," "Warning"** or **"Danger."** They are all important notes for safety and must be followed in addition to International Standards (ISO/IEC), Japan Industrial Standards (JIS)*1) and other safety regulations*2).

* 1) ISO 4414: Pneumatic fluid power – General rules relating to systems.
ISO 4413: Hydraulic fluid power – General rules relating to systems.
IEC 60204-1: Safety of machinery – Electrical equipment of machines. (Part 1: General requirements)
ISO 10218-1992: Manipulating industrial robots -Safety.
JIS B 8370: General rules for pneumatic equipment.
JIS B 8361: General rules for hydraulic equipment.
JIS B 9960-1: Safety of machinery – Electrical equipment of machines. (Part 1: General requirements)
JIS B 8433-1993: Manipulating industrial robots - Safety.
etc.
* 2) Labor Safety and Sanitation Law, etc.

⚠ Caution: Operator error could result in injury or equipment damage.

⚠ Warning: Operator error could result in serious injury or loss of life.

⚠ Danger : In extreme conditions, there is a possibility of serious injury or loss of life.

⚠ Warning

1. The compatibility of the product is the responsibility of the person who designs the equipment or decides its specifications.

Since the product specified here is used under various operating conditions, its compatibility with specific equipment must be decided by the person who designs the equipment or decides its specifications based on necessary analysis and test results. The expected performance and safety assurance of the equipment will be the responsibility of the person who has determined its compatibility with the product. This person should also continuously review all specifications of the product referring to its latest catalog information, with a view to giving due consideration to any possibility of equipment failure when configuring the equipment.

2. Only personnel with appropriate training should operate machinery and equipment.

The product specified here may become unsafe if handled incorrectly. The assembly, operation and maintenance of machines or equipment including our products must be performed by an operator who is appropriately trained and experienced.

3. Do not service or attempt to remove product and machinery/equipment until safety is confirmed.

1. The inspection and maintenance of machinery/equipment should only be performed after measures to prevent falling or runaway of the driven objects have been confirmed.
2. When the product is to be removed, confirm that the safety measures as mentioned above are implemented and the power from any appropriate source is cut, and read and understand the specific product precautions of all relevant products carefully.
3. Before machinery/equipment is restarted, take measures to prevent unexpected operation and malfunction.

4. Contact SMC beforehand and take special consideration of safety measures if the product is to be used in any of the following conditions.

1. Conditions and environments outside of the given specifications, or use outdoors or in a place exposed to direct sunlight.
2. Installation on equipment in conjunction with atomic energy, railways, air navigation, space, shipping, vehicles, military, medical treatment, combustion and recreation, or equipment in contact with food and beverages, emergency stop circuits, clutch and brake circuits in press applications, safety equipment or other applications unsuitable for the standard specifications described in the product catalog.
3. An application which could have negative effects on people, property, or animals requiring special safety analysis.
4. Use in an interlock circuit, which requires the provision of double interlock for possible failure by using a mechanical protective function, and periodical checks to confirm proper operation.

Safety Instructions

⚠ Caution

The product is provided for use in manufacturing industries.
The product herein described is basically provided for peaceful use in manufacturing industries.
If considering using the product in other industries, consult SMC beforehand and exchange specifications or a contract if necessary. If anything is unclear, contact your nearest sales branch.

Limited Warranty and Disclaimer/Compliance Requirements

The product used is subject to the following “Limited Warranty and Disclaimer” and “Compliance Requirements”. Read and accept them before using the product.

Limited Warranty and Disclaimer

1. **The warranty period of the product is 1 year in service or 1.5 years after the product is delivered.**∗**3)**
   Also, the product may have specified durability, running distance or replacement parts. Please consult your nearest sales branch.
2. **For any failure or damage reported within the warranty period which is clearly our responsibility, a replacement product or necessary parts will be provided.**
   This limited warranty applies only to our product independently, and not to any other damage incurred due to the failure of the product.
3. **Prior to using SMC products, please read and understand the warranty terms and disclaimers noted in the specified catalog for the particular products.**

∗ **3) Vacuum pads are excluded from this 1 year warranty.**
A vacuum pad is a consumable part, so it is warranted for a year after it is delivered.
Also, even within the warranty period, the wear of a product due to the use of the vacuum pad or failure due to the deterioration of rubber material are not covered by the limited warranty.

Compliance Requirements

When the product is exported, strictly follow the laws required by the Ministry of Economy, Trade and Industry (Foreign Exchange and Foreign Trade Control Law).

Clean series: Common Precautions 1

Be sure to read before handling.
Refer to the main text for detailed precautions on every series.

Air Supply

⚠ Caution

System Configuration

Refer to the "Air Preparation System" below for the quality of compressed air before configuring the system.

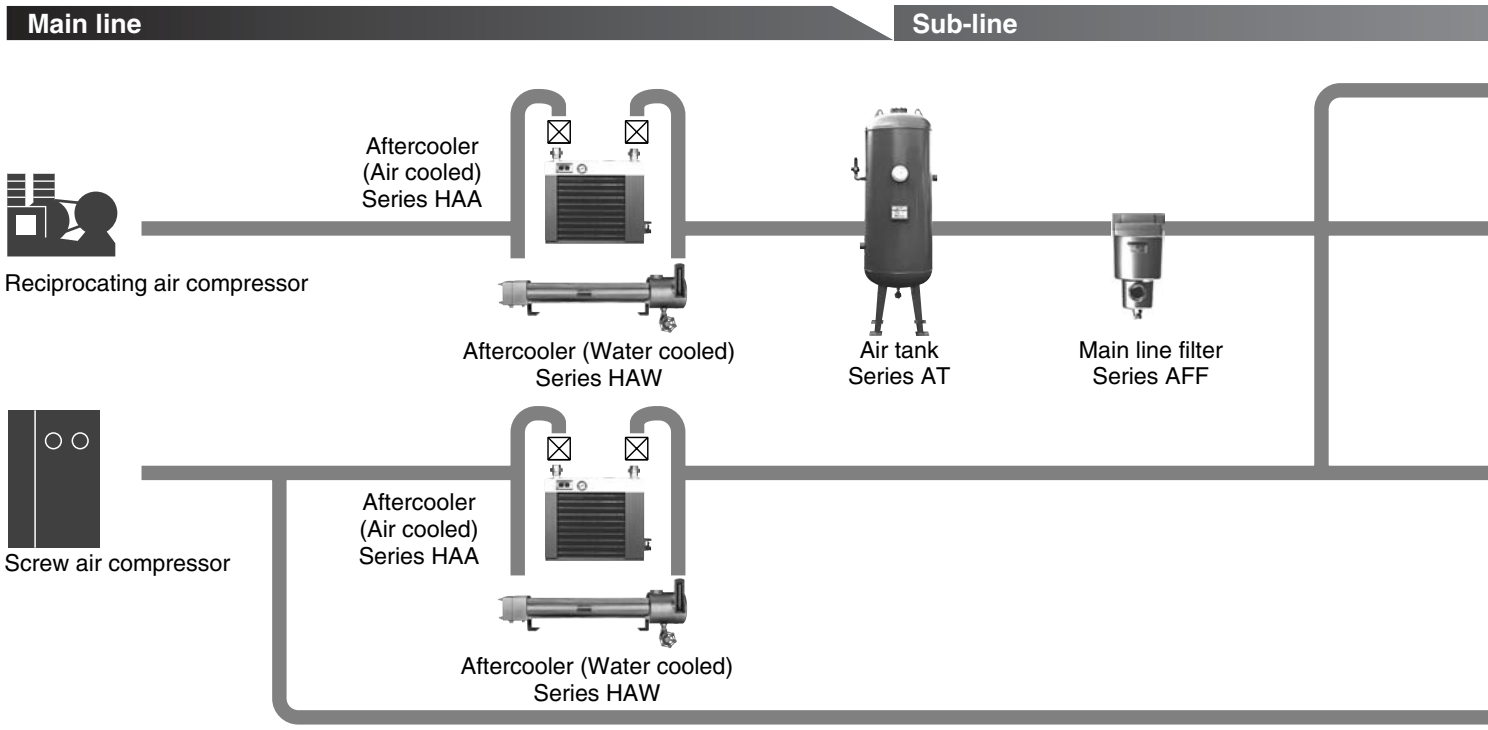

Piping

1. Provide an inclination of 1cm per meter in the direction of the air flow to the main piping.

2. If there is a line branching from the main piping, provide an outlet of compressed air on top using a tee so that drainage accumulated in the piping will not flow out.

3. Provide a drainage mechanism at every recessed point or dead end to prevent drain accumulation.

4. For future piping extensions, plug the end of the piping with a tee.

5. Before piping

Before piping, the piping should be thoroughly blown out with air (flushed) or washed to remove chips, cutting oil and other debris from inside the pipe.

6. Wrapping of pipe tape

When screwing piping or fittings into ports, ensure that chips from the pipe threads or sealing material do not get inside the valve.

Also, when pipe tape is used, leave 1.5 to 2 thread ridges exposed at the end of the threads.

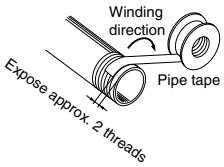

7. If air with a low dew point (–40°C or less) is required, do not use nylon tube or resin fitting (except for fluorine resin) for the outlet side of the membrane air dryer or heatless air dryer. Nylon tubing could be affected by the ambient air and it thus might not be possible to achieve the prescribed low dew point at the end of the tube. Therefore, for low dew point air, use stainless steel or fluorine tube.

Maintenance

1. If the heatless air dryer Series ID is left unused for a long period, the absorbent may be moistened. Prior to use, close the valve on the outlet side of the dryer for regeneration and drying.

Caution on Design

Employ a safe design, so that the following unexpected conditions will not occur.

⚠ Warning

1. Provide a design that prevents high-temperature compressed air from flowing into the outlet side of the cooling equipment.

If the flow of the coolant water in a water-cooled aftercooler is stopped or if the fan motor of an air cooled aftercooler is stopped, the high-temperature compressed air will flow to the outlet side of the cooling equipment, causing the equipment on the outlet side (such as the AFF, AM, AD, or IDF series) to be damaged or to malfunction.

2. Provide a design in which interruptions in the supply of compressed air are taken into consideration.

SMC

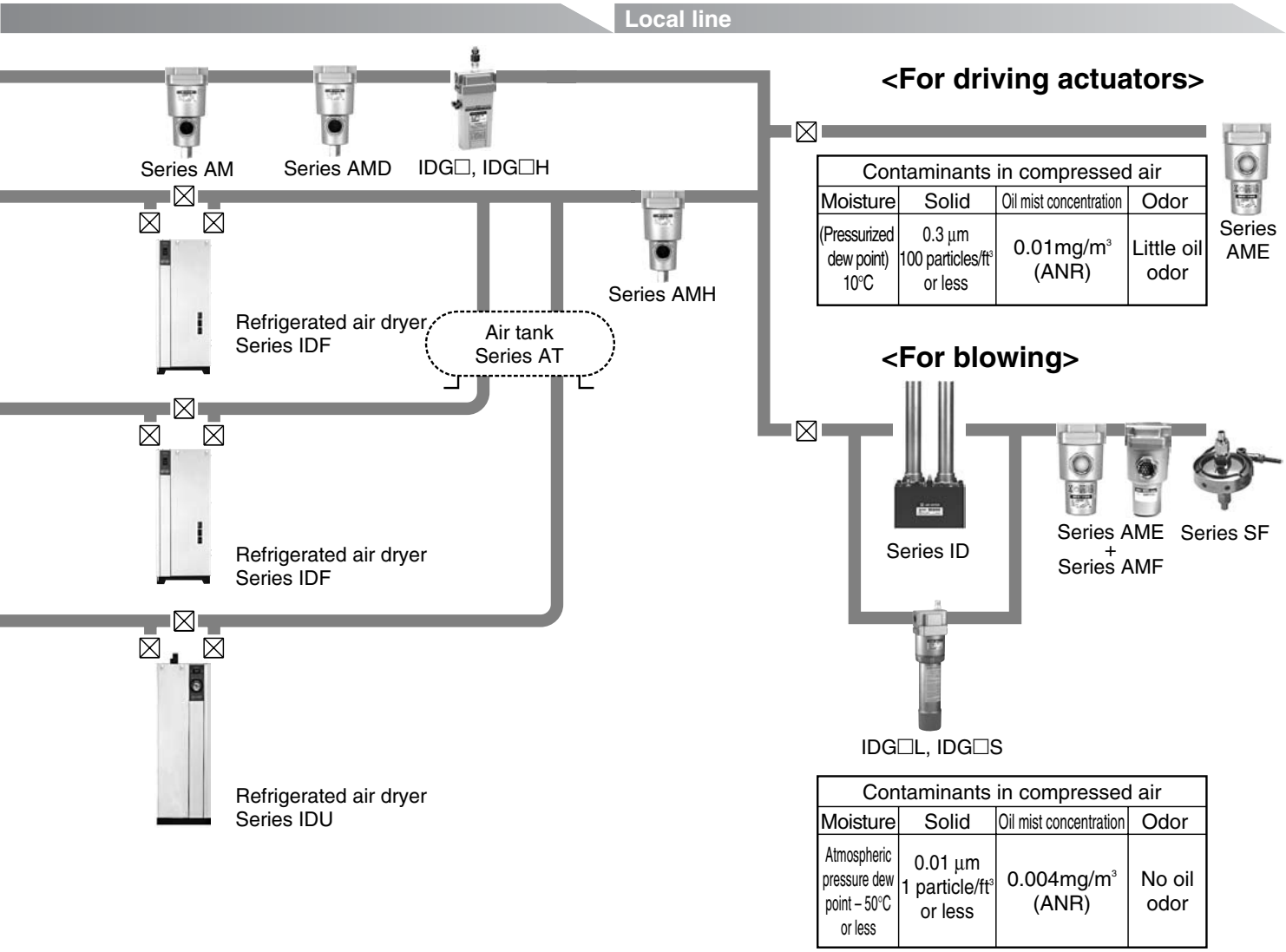

There are cases in which compressed air cannot flow due to the freezing of the refrigerated air dryer or a malfunction (heatless dryer) in the switching valve.

⚠ Caution

3. Design a layout in which the leakage of the coolant water and the dripping of condensation are taken into consideration.

A water-cooled aftercooler that uses coolant water could lead to water leakage due to freezing. Depending on the operating conditions, the refrigerated air dryer and its downstream pipes could create a dripping of water droplets due to condensation formed by supercooling.

4. Provide a design that prevents back pressure and backflow.

The generation of back pressure and backflow could lead to equipment damage.

Take appropriate safety measures, including the proper installation methods.

5. Depending on the model and operating conditions, the life span of air cylinders may be shortened when they are used in an environment of super dry air (atmospheric pressure dew point: –50°C) or high-purity nitrogen gas or when such super dry air or high-purity nitrogen gas is used as the fluid.

Please contact with SMC for further details on applicable series, models, operating conditions and life spans.

6. Blowing system

Even a small amount of dust can be a problem for blowing systems.

Install Clean Gas Filter Series SF to the end of the blowing line.

Clean series: Common Precautions 2

Be sure to read before handling.
Refer to the main text for detailed precautions on every series.

Piping: Inside of Clean Room

⚠ Caution

1. **Do not make the piping for the air cylinder relief port and regulator breathing vent piping common with solenoid valve exhaust piping.**
   This can cause malfunctions in the air cylinder or regulator pressure change.

2. **Arrange the piping so that the exhaust air of the solenoid valves is exhausted outside of the clean room.**

3. **Air filter drain piping**
   Exhaust drainage outside the clean room through piping from the drain guide of the air filter.

4. **Arrange the membrane dryer air purge piping using a standard size tubing so that air is exhausted outside the clean room.**

5. **Take precautions so that the threaded portion of the piping connection or the tubing connection will not be loosened.**
   Take sufficient precautions against the piping shaking along with the vibration of the equipment.

6. **Use polyurethane tubing containing no plasticizer.**

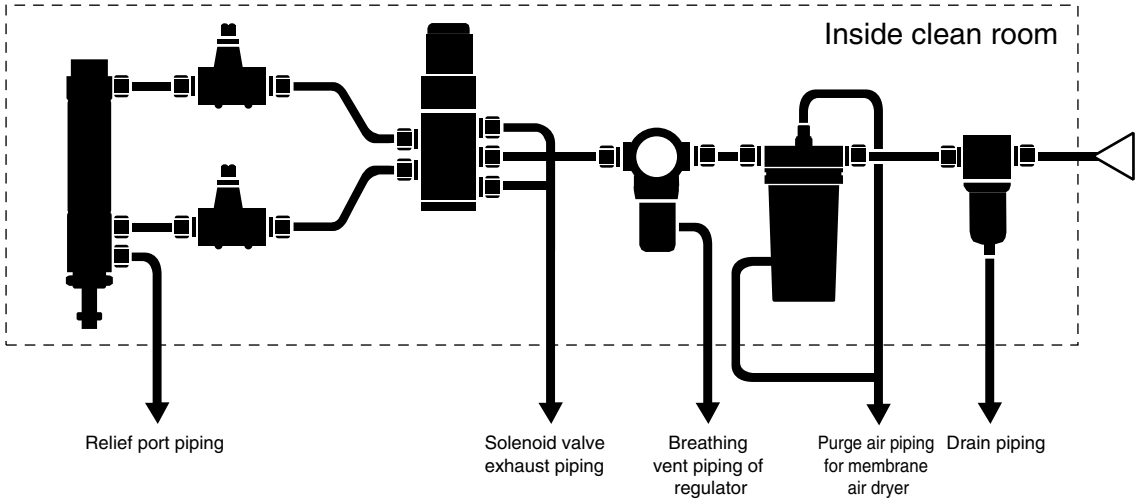

Handling

⚠ Caution

1. **The inner bag of a double-packed clean series package should be opened in a clean room or clean environment.**

2. **When standard pneumatic equipment is brought into a clean room, spray high-purity air upon it and remove dust thoroughly by wiping the external surfaces of the cylinder tube, solenoid valves and air line equipment with alcohol.**

3. **To replace parts or disassemble the product in a clean room, first exhaust the compressed air inside the piping to the outside of the clean room before the work.**

4. **Do not use rotation type mounting brackets such as clevises, trunnions, etc.. They will generate a considerable amount of particulate matter due to the sliding friction between the metal parts.**

Lubrication / In the Case of Actuator

⚠ Warning

Be sure to wash your hands after handling fluororesin grease.
The grease itself is not hazardous but it can produce a hazardous gas at temperatures exceeding 260°C.

⚠ Caution

1. **Do not use any greases but those specified by SMC.**
   Use of greases not specified will cause malfunctions or particle generation.

2. **Do not lubricate the products since they are of a nonlubricant type.**
   As the clean series actuators are lubricated at the factory with fluororesin grease, the product specifications may not be satisfied if turbine oil or other such lubricants are applied.

Piston speed

⚠ Caution

The cylinder speed upper limit that retains the particle generation grade is 400 mm/s.

Clean series: Common Precautions 3

Be sure to read before handling.
Refer to the main text for detailed precautions for every series.

Suction flow rate of vacuum suction types

⚠ Caution

For the vacuum suction types (Series 11-/13-/22-), perform vacuum suction at the vacuum port to retain the particle generation grade.

The optimum suction flow rate varies depending on series and sizes. Refer to "Suction flow rate of vacuum suction type (Reference values)" for each series. (The vacuum pressure will be approximately -27 kPa at around 1 m from the vacuum suction port.) Please consult SMC for further details.

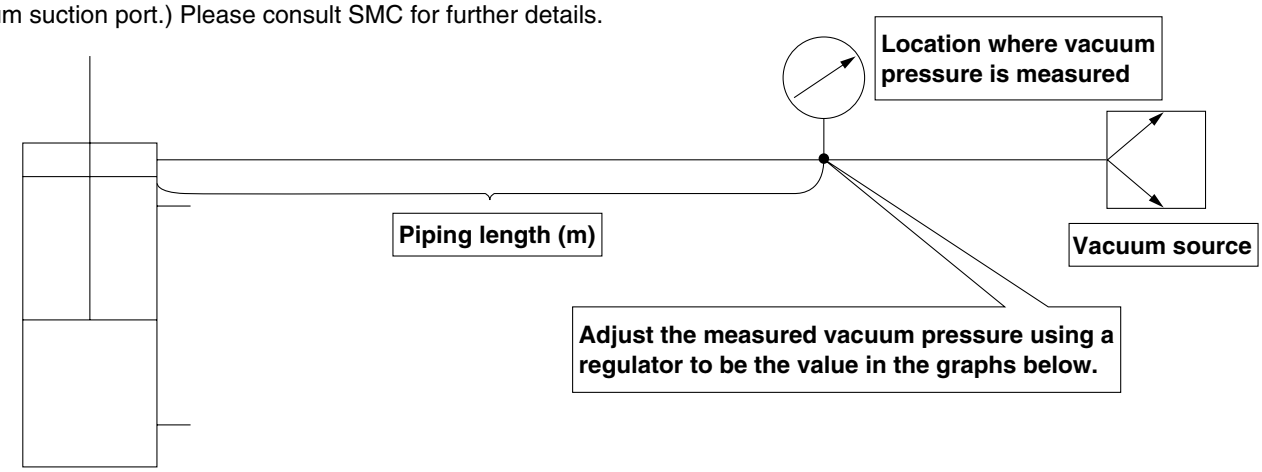

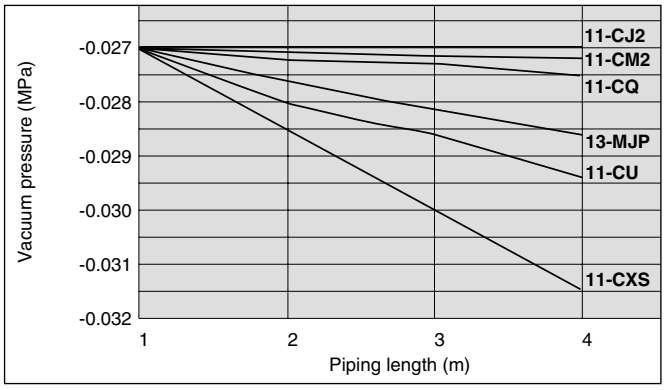

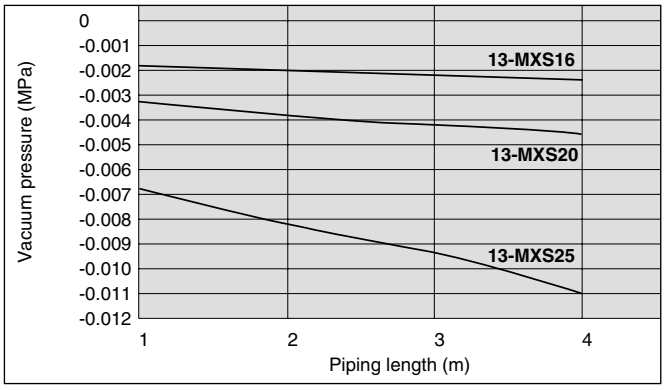

SMC Corporation

Akihabara UDX 15F,
4-14-1, Sotokanda, Chiyoda-ku, Tokyo 101-0021, JAPAN
Phone: 03-5207-8249 FAX: 03-5298-5362
URL http://www.smcworld.com

© 2008 SMC Corporation All Rights Reserved

Specifications are subject to change without prior notice and any obligation on the part of the manufacturer.

D-SZ 1st printing MT printing MT 16400SZ Printed in Japan.