Stopper Cylinder

Series RSQ (Fixed mounting height) ø12, ø16, ø20, ø32, ø40, ø50

Series RSG (Adjustable mounting height) ø40, ø50

Realize labor saving and automation of conveyor line

A through-hole style and a both ends tapped style are available.
Series RSQ (Fixed mounting height type)
ø12, ø16, ø20, ø32, ø40, ø50

Mounting position can be adjusted arbitrarily by changing the attached flange height.
Series RSG (Adjustable mounting height type)
ø40, ø50

Numerous variations

It is possible to select option for many applications.
Style: Fixed mounting height (RSQ), Adjustable mounting height (RSG)
Action: Double acting, Single acting (Spring extend), Double acting with spring
Rod end configuration: Round bar type, Chamfered type, Roller type, Lever type
Mounting: Through-hole, Both ends tapped (RSQ)
Flange: (RSG)

Equipped with an easy-to-maintain shock absorber.

The shock absorber incorporated in the lever type is adjustment-free and easy-to-maintain. (ø32, ø40, ø50)

Auto switch option available

Compact auto switch mounting to enable miniaturization of machines and designs.

Lever type selected according to applications

- Prevention of repulsion by light pallets····Locking mechanism
- Partial passing of work·····With cancel



Series RSG

Series RSQ

Lock Mechanism

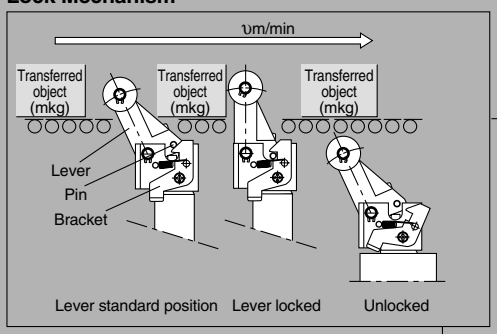

Cancel Cap
(Mechanism to hold lever horizontally)

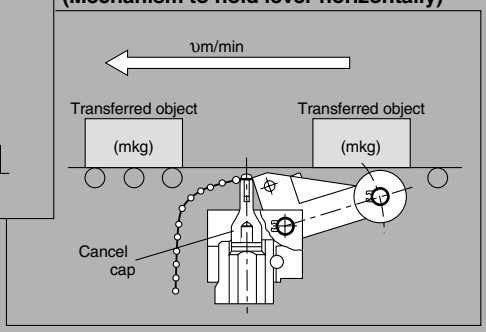

Series Variations

Series	Mounting	Action	Rod end configuration	Standard variations: Built-in magnet	With lock mechanism	With cancel	Built-in One-touch fittings	Bore size (mm)	Standard stroke (mm)
RSQ	Through-hole / Both ends tapped style	Double acting / Double acting with spring loaded / Single acting Spring extend	Round bar type / Roller type / Chamfered type / Lever type: Fixed / Adjustable	●	●	●	●	12	10 15 20 25 30
				●	●	●	●	16	10 15 20 25 30
				●	●	●	●	20	10 15 20 25 30
				●	●	●	●	32	10 15 20 25 30
				●	●	●	●	40	15 20 25 30
				●	●	●	●	50	15 20 25 30
RSG	Flange style	Double acting / Double acting with spring loaded / Single acting Spring extend	Round bar type / Roller type / Chamfered type / Lever type: Fixed / Adjustable	●	●	●	●	40	15 20 25 30
				●	●	●	●	50	15 20 25 30

Specific Product Precautions 2

Be sure to read before handling.

Selection (RSH, RS1H)

⚠ Danger

1. Use the equipment only within the specified operating range.

If the condition exceeds the specified operating range, it will cause excessive impact or vibration to the stopper cylinder, leading to possible damages.

⚠ Caution

1. Do not collide the pallet while the lever is standing erect.

In case of a lever with built-in shock absorber type, do not collide the next pallet while the lever is standing erect. Otherwise, all energy will be applied to the cylinder body.

2. When a load directly connected to the cylinder is stopped at an intermediate position:

Apply the operating range in the catalog only in these cases where the stopper cylinder is used to stop pallets on a conveyor belt. When using the stopper cylinder to stop loads directly connected to a cylinder or some other equipment, a lateral load is applied as the cylinder thrust. Please consult with SMC in such cases.

Mounting (RSH, RS1H)

⚠ Caution

1. Do not apply rotational torque to the cylinder rod.

Align the cylinder parallel to the working face of the pallet working when installing in order to prevent rotational torque working on the cylinder rod.

2. Do not scratch or gouge the sliding part of the piston rod or guide rod.

Scratches and gouges may damage the packing, causing air leakage or malfunction.

Operation (RSH, RS1H)

⚠ Caution

1. In case of an end lever type with locking mechanism, do not apply an external force from the opposite side when the lever is locked.

Lower the cylinder before adjusting the conveyor or moving the pallet.

2. Do not let your hand become caught when operating the cylinder.

The lever holder goes up and down while the cylinder is in operation. Pay sufficient attention not to let your hand or fingers become caught between the rod cover and lever holder.

3. Do not let water, cutting oil or dust splash on the equipment.

It can cause oil leakage and malfunction of the shock absorber.

Selection (RSA)

⚠ Caution

1. Do not allow pallets to strike the lever when it is standing up.

Do not allow pallets to strike the lever when it is standing up (after the shock absorber has absorbed energy), because the cylinder body will be subjected to the full energy of the impact.

2. Do not use a stopper cylinder for intermediate stopping of loads directly connected to a cylinder, etc.

The operating ranges shown in the catalog should only be used for stopping pallets on a conveyor. If loads connected directly to a cylinder, etc., are stopped with a stopper cylinder, the cylinder's thrust will become a lateral load. Please consult with SMC in this case.

Mounting (RSA)

⚠ Caution

1. Do not apply rotational torque to the cylinder rod.

To prevent rotational torque from being applied to the cylinder rod, mount so that the contact surfaces of the pallet and cylinder are parallel to one another.

2. Do not scratch or nick the sliding parts of the piston.

Damage to seals can cause air leakage and malfunction, etc.

Operation (RSA)

⚠ Caution

1. Do not apply external force from the opposite direction to the end lever type locking mechanism when the lever is locked.

When pallets move during conveyor adjustment, first lower the cylinder.

2. Be careful in the space between the cylinder and the lever holder.

Since the lever holder moves up and down during cylinder operation, be careful that hands and fingers, etc., are not caught between the rod and lever holder.

3. Do not allow the cylinder to be exposed to cutting oil, water or dust, etc.

Do not use the cylinder under conditions where it will be exposed to liquids such as cutting oil and water, or dust, etc. This can cause malfunction of the built-in shock absorber.

4. When making adjustments, be sure that transferred articles do not strike the cylinder until shock absorber resistance has been set to the maximum value.

If transferred articles strike the cylinder with energy greater than the resistance of the shock absorber, a load will be applied to the lever which can cause malfunction.
(It is set to maximum when shipped from the factory.)

Stopper Cylinder
Series RSA
ø50, ø63, ø80

Stops pallets gently.
Stopper cylinder with built-in shock absorber.



Energy absorption can be adjusted to accommodate varying loads

Transferred articles are gently stopped with a built-in adjustable shock absorber.

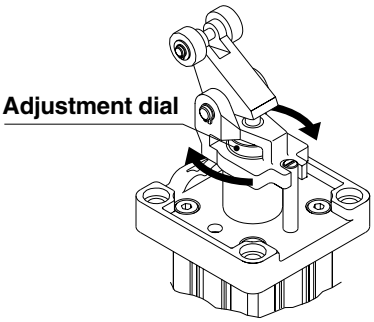

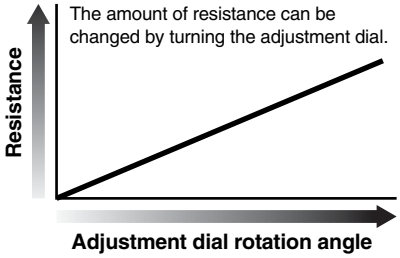

Stopper direction can be changed within 90°

The stopper lever can be rotated 90°.

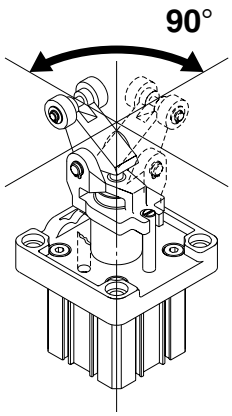

Series Variations

Series	Mounting	Action	Rod end configuration		Standard variations	Option		Bore size (mm)	Standard stroke	
					Built-in magnet	With lock	With cancel		30	40
RSA	Flange style	Double acting	Lever type	Adjustable	●	●	●	50	●	●
		Double acting with spring			●	●	●	63	●	●
		Single acting			●	●	●	80	●	●

Option

■ **With lock mechanism**

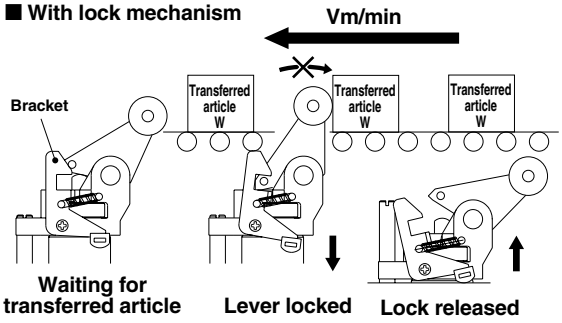

A repulsion preventing mechanism keeps light pallets, etc., from being pushed back by the reactive force of the shock absorber's spring.

■ **With cancel cap**

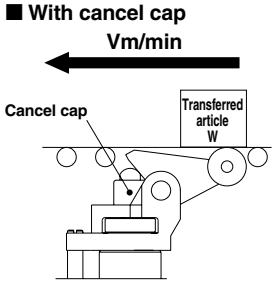

The lever is set to a pallet pass position allowing some pallets to pass by.

Heavy duty rod

Bore size (mm)	Rod dia. (mm)
50	32
63	40
80	50

Three types of action

1. Single acting
2. Double acting
3. Double acting with spring

Auto switch capable

Mounting is possible with no protrusion from the body surface.

Two types of roller material can be selected to accommodate the application

(Resin, Rolled steel)

Stopper Cylinder

Series RSA

ø50, ø63, ø80

How to Order

RSA **50** — **30** **D** **L** — [ ] — **Z73** [ ]

Bore size

50	50mm
63	63mm
80	80mm

Cylinder stroke

50, 63	30mm
80	40mm

Action

D	Double acting
B	Double acting with spring
T	Single acting, Spring extend

Roller material

L	Resin
M	Rolled steel

Option ∗1

Nil	Without option
D	With lock mechanism
C	With cancel cap

∗ 1 Options can be combined. However, indicate in the order of D C.

Auto switch

Nil	Without auto switch (Built-in magnet)

∗ For the applicable auto switch model, refer to the table below.

Number of auto switches

Nil	2 pcs.
S	1 pc.

Applicable Auto Switch/Refer to page 10-20-1 for further information on auto switches.

Type	Special function	Electrical entry	Indicator light	Wiring (Output)	Load voltage			Auto switch model		Lead wire length* (m)			Applicable load	
					DC		AC	Electrical entry direction		0.5 (Nil)	3 (L)	5 (Z)		
								Perpendicular	In-line					
Reed switch	—	Grommet	Yes	3-wire	—	5V	—	—	**Z76**	●	●	—	IC circuit	—
			No	2-wire	24V	12V	100V	—	**Z73**	●	●	●	—	Relay, PLC
						5V, 12V	100V or less	—	**Z80**	●	●	—	IC circuit	
Solid state switch	—	Grommet	Yes	3-wire (NPN)	24V	5V	—	**Y69A**	**Y59A**	●	●	○	IC circuit	Relay, PLC
				3-wire (PNP)		12V		**Y7PV**	**Y7P**	●	●	○		
				2-wire		12V		**Y69B**	**Y59B**	●	●	○	—	
	Diagnostic indication (2 color indication)			3-wire (NPN)		5V		**Y7NWV**	**Y7NW**	●	●	○	IC circuit	
				3-wire (PNP)		12V		**Y7PWV**	**Y7PW**	●	●	○		
				2-wire		12V		**Y7BWV**	**Y7BW**	●	●	○	—	
	Water resistant (2 color indication)							—	**Y7BA**	—	●	○		

∗ Lead wire length symbols: 0.5 m ····· Nil (Example) Y69B
3 m ····· L (Example) Y69BL
5 m ····· Z (Example) Y69BZ

∗∗ Solid state switches marked with a "○" symbol are produced upon receipt of order.
∗∗∗ Types D-A7□, D-A8□, D-F7□ and D-J7□ can be mounted with options.

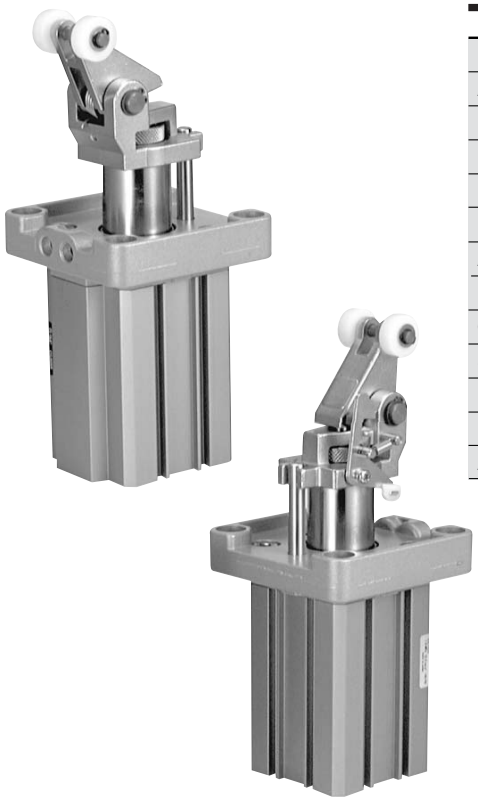

Specifications

Bore size (mm)	50	63	80
Action	Double acting, Single acting spring extend, Double acting with spring		
Rod end configuration	Lever type with built-in shock absorber		
Fluid	Air		
Proof pressure	1.5MPa		
Maximum operating pressure	1.0MPa		
Ambient and fluid temperature	–10 to 60°C (with no freezing)		
Lubrication	Not required (non-lube)		
Cushion	Rubber bumper		
Stroke length tolerance	$^{+1.4}_{0}$		
Mounting	Flange		
Port size	Rc 1/8	Rc 1/4	Rc 1/4
Auto switch	Mountable		

Operating Range

(Example) Load weight 300kg, Transfer speed 20m/min, Coefficient of friction μ = 0.1

(Viewing the graphs)

From Graph (2), find the intersection of load weight 300kg on the vertical axis and transfer speed 20m/min. on the horizontal axis. Select bore size ø63 from within the cylinder operating range.

Graph (1)

Bore size ø50, ø63, ø80/μ = 0

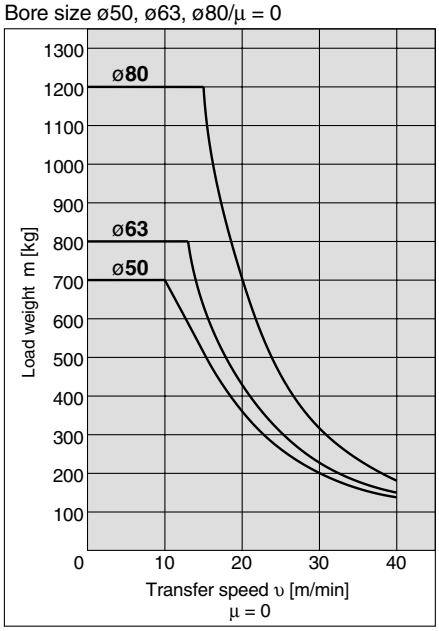

Graph (2)

Bore size ø50, ø63, ø80/μ = 0.1

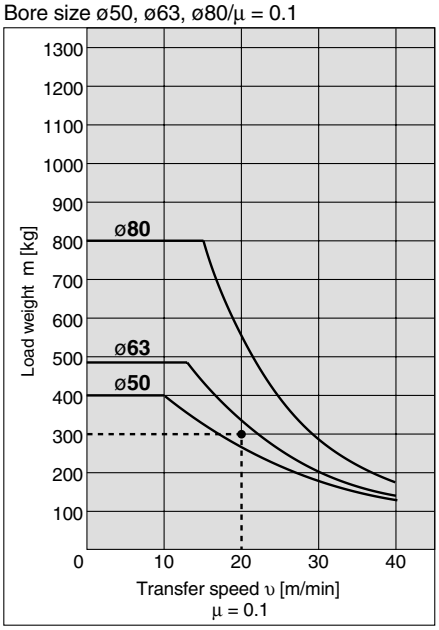

Lateral Load and Operating Pressure

The larger the lateral load, the higher the pressure required to operate the stopper cylinder. Set the operating pressure using the graph below as a guide.

RSA50, 63, 80

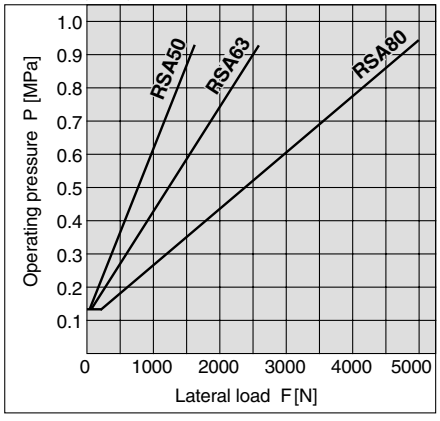

Dimensions

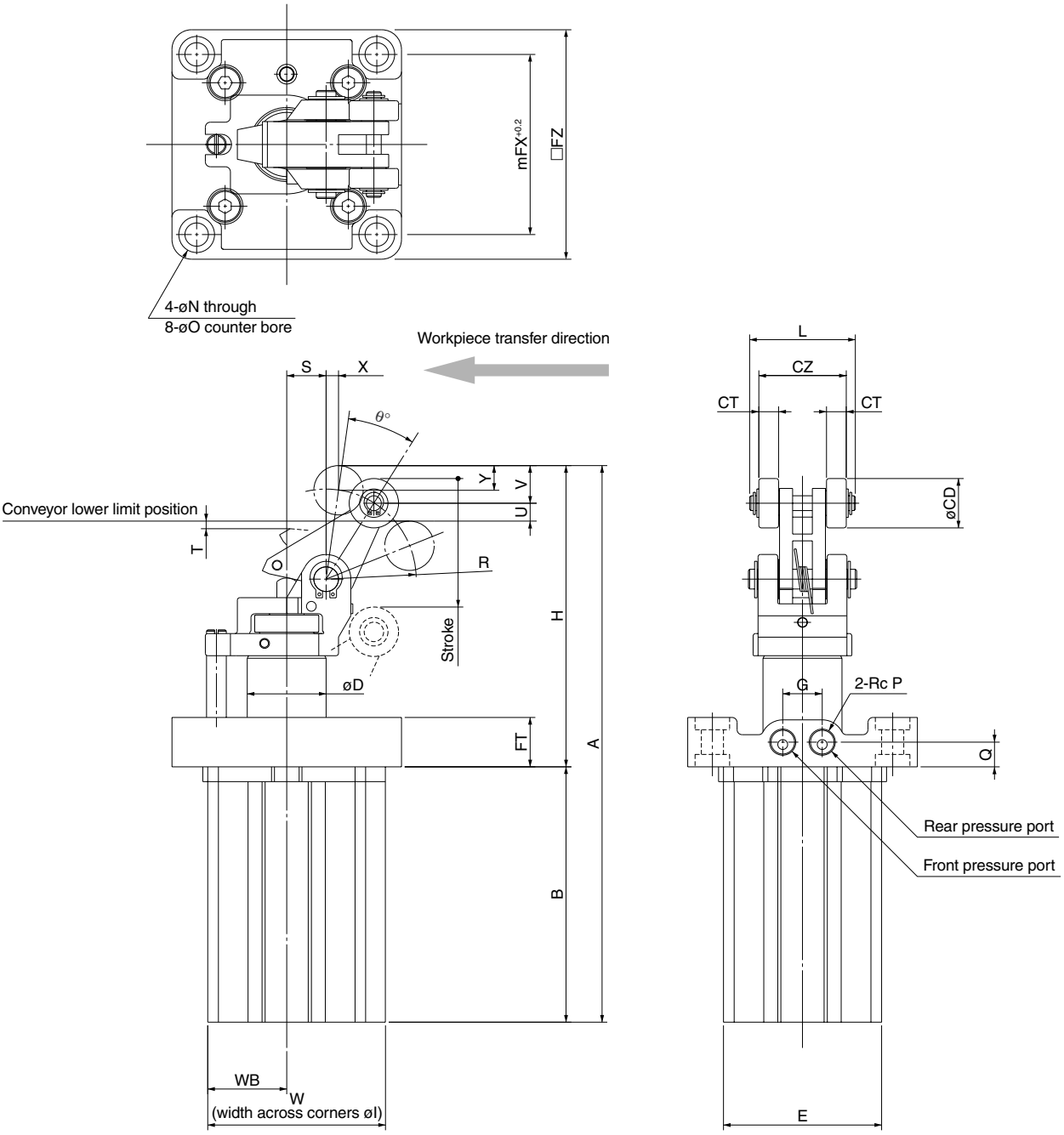

(mm)

Bore size (mm)	Stroke	A	B	CD	CT	CZ	D	E	FT	FX	FZ	G	H	I	L	N	O	P	Q	R
50	30	225.5	103.5	20	8	35.5	32	64	20	73	93	16	122	85	44	9	14 depth 5	1/8	10	36
63	30	246	106	20	10	44.5	40	77	25	90	114	24	140	103	53	11	18 depth 6	1/4	12.5	43
80	40	299.5	135	25	10	44.5	50	98	25	110	138	28	164.5	132	54	13	20 depth 6	1/4	12.5	49

Bore size (mm)	S	T	U	V	W	WB	X	Y	θ°
50	16	3.1	7.2	15.5	72	32	5	10	24°
63	18.5	3	8.8	16	87.5	38.5	5	10	24.5°
80	21	3.7	9	19	109	49	5	12.5	24.5°

Stopper Cylinder / Fixed Mounting Height

Series RSQ

ø12, ø16, ø20, ø32, ø40, ø50

How to Order

Standard RSQ B 20 ☐ – 15 D ☐ – ☐

With auto switch RSDQ B 20 ☐ – 15 D ☐ – M9BW ☐ – ☐

With auto switch
(Built-in magnet)

Mounting bracket

B	Through-hole (Standard)
A	Both ends tapped style

Note 1) Since ø12 uses a common tube for both A and B, only B is used for part no. denotation.

Bore size

12	12 mm
16	16 mm
20	20 mm
32	32 mm
40	40 mm
50	50 mm

Port thread type

Nil	M thread	ø12, ø16
	Rc	ø20 to ø50
TN	NPT	
TF	G	
F	Built-in One-touch fittings (2)	

Note 2) Bore sizes available w/ One-touch fittings are ø20 to ø50.
Note 3) TF for ø20 indicates M5.

Cylinder stroke (mm)

12	10
16	10, 15
20	10, 15, 20
32	10, 15, 20
40	20, 25, 30
50	20, 25, 30

Auto switch

Nil	Without auto switch

∗ For the applicable auto switch model, refer to the table below.

Number of auto switches

Nil	2 pcs.
S	1 pc.

Rod end configuration

Symbol	Configuration	Application
Nil	Rounde bar type	—
K	Chamfered type	—
R	Roller type	—
L	Lever type (Non-adjustable) (4)	Basic style
B	Lever type (4) (Energy absorbing / Adjustable deformation)	—
C		With cancel cap
D		With lock menchanism
E		With lock & cancel

Note 4) The lever types are applicable only to bore sizes ø32, ø40 and ø50.

Action

D	Double acting
B	Double acting with spring loaded
T	Single acting (Spring extend)

Made to Order Specifications
For details, refer to page 1374.

Built-in Magnet Cylinder Model

If a built-in magnet cylinder without an auto switch is required, there is no need to enter the symbol for the auto switch.
(Example) RSDQB32-15D

Applicable Auto Switch
/Refer to pages 1719 to 1827 for further information on auto switches.

Type	Special function	Electrical entry	Indicator light	Wiring (Output)	Load voltage DC	Load voltage AC	Auto switch model: Perpendicular ø12	Perpendicular ø16, ø20, ø32 to ø50	In-line ø12	In-line ø16, ø20, ø32 to ø50	Lead wire length (m): 0.5 (Nil)	1 (M)	3 (L)	5 (Z)	None (N)	Pre-wired connector	Applicable load	
Solid state switch	——	Grommet	Yes	3-wire (NPN)	24 V	5 V, 12 V	M9NV		M9N		●	●	●	○	—	○	IC circuit	Relay, PLC
				3-wire (PNP)			M9PV		M9P		●	●	●	○	—	○		
				2-wire		12 V	M9BV		M9B		●	●	●	○	—	○	—	
		Connector					—	J79C	—		●	—	●	●	●	—		
	Diagnostic indication (2-color indication)	Grommet		3-wire (NPN)		5 V, 12 V	M9NWV		M9NW		●	●	●	○	—	○	IC circuit	
				3-wire (PNP)			M9PWV		M9PW		●	●	●	○	—	○		
				2-wire		12 V	M9BWV		M9BW		●	●	●	○	—	○	—	
	Water resistant (2-color indication)			3-wire (NPN)		5 V, 12 V	M9NAV		M9NA		○	○	●	○	—	○	IC circuit	
				3-wire (PNP)			M9PAV		M9PA		○	○	●	○	—	○		
				2-wire		12 V	M9BAV		M9BA		○	○	●	○	—	○	—	
	With diagnostic output (2-color indication)			4-wire		5 V,12 V	—		—	F79F	●	—	●	○	—	○	IC circuit	
Reed switch	——	Grommet	Yes	3-wire (NPN equivalent)	—	5V	A96V		A96		●	—	●	—	—	—	IC circuit	—
				2-wire		—	—	200 V	—	A72	—	A72H	●	—	●	—	—	—	—	Relay, PLC
			No		24 V	12 V	100 V	A93V		A93		●	—	●	—	—	—	
						5 V,12 V	100 V or less	A90V		A90		●	—	●	—	—	—	IC circuit
		Connector	Yes			12 V	—	—	A73C	—		●	—	●	●	●	—	—
			No			5 V,12 V	24 V or less	—	A80C	—		●	—	●	●	●	—	IC circuit
	Diagnostic indication (2-color indication)	Grommet	Yes			—	—	—	A79W	—		●	—	●	—	—	—	—

∗ Lead wire length symbols: 0.5 m ····· Nil (Example) M9NW
1 m ····· M (Example) M9NWM
3 m ····· L (Example) M9NWL
5 m ····· Z (Example) M9NWZ
None ····· N (Example) J79CN

∗ Solid state auto switches marked with "○" are produced upon receipt of order.

∗ Since there are other applicable auto switches than listed, refer to page 1386 for details.
∗ For details about auto switches with pre-wired connector, refer to pages 1784 and 1785.
∗ When D-A9□(V)/M9□(V)/M9□W(V)/M9□A(V)L types with ø32 to ø50 are mounted on a side other than the port side, order auto switch mounting brackets separately. Refer to page 1386 for details.

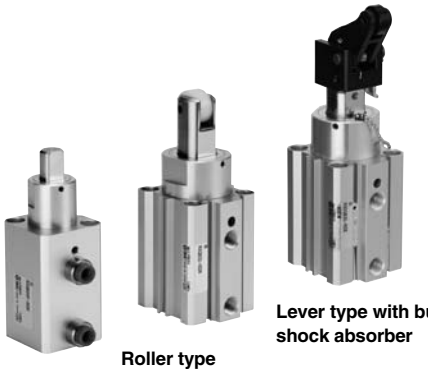

Roller type

Lever type with built-in shock absorber



Round bar

Model

Bore size (mm)		12	16	20	32	40	50
Mounting	Through-hole	● Note1)	●	●	●	●	●
	Both ends tapped style		●	●	●	●	●
Built-in magnet		●	●	●	●	●	●
Piping	Screw-in type	M5 x 0.8		1/8 Note2)			
	Built-in One-touch fittings	—		ø6/4			ø8/6
Action		Double acting, Single acting (Spring extend), Double acting with spring loaded					
Rod end configuration	Round bar	●		●			
	Chamfered	●		●			
	Roller type	●		●			
	Lever type	—		●			

Note 1) ø12 tubes can have both through-hole and tap mountings in the same tube.
Note 2) TF (G thread) for ø20 indicates M5 x 0.8.

Specifications

Action	Double acting, Double acting with spring loaded, Single acting (Spring extend)
Fluid	Air
Proof pressure	1.5 MPa
Maximum operating pressure	1.0 MPa
Ambient and fluid temperature	Without auto switch: –10 to 70°C With auto switch: –10 to 60°C
Lubrication	Not required (Non-lube)
Cushion	Rubber bumper
Stroke length tolerance	$^{+1.4}_{0}$
Mounting	Through-hole/Both ends tapped
Auto switch	Mountable

∗ No freezing (for cylinders with or without an auto switch)

Made to Order

Made to Order Specifications

(For details, refer to pages 1836 and 1872.)

Symbol	Specifications
–XA□	Change of rod end shape
–XC3	Special port location

Bore Size/Standard Stroke

(mm)

Bore size (mm)	Rod end configuration		
	Round bar, Chamfered type	Roller type	Lever type with shock absorber
12	10	10	—
16	10, 15	10, 15	—
20	10, 15, 20	10, 15, 20	—
32			10, 15, 20
40	20, 25, 30	20, 25, 30	20, 25, 30
50			

Spring Force (Single acting)

(N)

Bore size (mm)	Extended	Compressed
12	3.9	9.6
16	4.9	14.9
20	3.4	14.9
32	8.8	18.6
40, 50	13.7	27.5

∗ Applicable only to round bar type, chamfered type and roller type end configurations.

Mass

(kg)

Action	Bore size (mm)	Rod end configuration	Cylinder stroke (mm)				
			10	**15**	**20**	**25**	**30**
Double acting Single acting, Spring extend Double acting with spring loaded	**12**	Round bar, Chamfered, Roller	0.07	—	—	—	—
	16	Round bar, Chamfered, Roller	0.14	0.15	—	—	—
	20	Round bar, Chamfered, Roller	0.23	0.24	0.25	—	—
	32	Round bar, Chamfered, Roller	0.42	0.44	0.46	—	—
		Lever with built-in shock absorber	0.51	0.53	0.55	—	—
	40	Round bar, Chamfered, Roller	—	—	0.74	0.80	0.86
		Lever with built-in shock absorber	—	—	0.97	1.01	1.05
	50	Round bar, Chamfered, Roller	—	—	1.03	1.07	1.11
		Lever with built-in shock absorber	—	—	1.26	1.30	1.34

Mounting Bolt for RSQB

Mounting method: Mounting bolt for through-hole mounting style of RSQB is available as an option.
Ordering: Add the word "Bolt" in front of the bolts to be used.

Example) Bolt M5 x 65L 4 pcs.

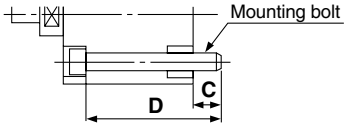

(mm)

Cylinder model	C	D	Mounting bolt
RSQB12-10□ Note)	5	40	M3 x 45L
RSQB16-10□	7	48	M3 x 55L
-15□		53	M3 x 60L
RSQB20-10□		55	M5 x 55L
-15□		60	M5 x 60L
-20□		65	M5 x 65L
RSQB32-10□	9	60	M5 x 60L
-15□		65	M5 x 65L
-20□		70	M5 x 70L

Cylinder model	C	D	Mounting bolt
RSQB40-20□	9.5	75	M5 x 75L
-25□	9	80	M5 x 80L
-30□		85	M5 x 85L
RSQB50-20□		75	M6 x 75L
-25□		80	M6 x 80L
-30□		85	M6 x 85L

Note) When using the through-hole mounting for a size ø12 cylinder, be sure to use the flat washer which is attached.

Operating Ranges by Rod End Configuration

(Example 1) For roller type with transfer speed of 15 m/min. and the mass of transferred object of 30 kg.

<How to read the graphs>
To select a cylinder based on the specifications above, find the intersection of the speed of 15 m/min. on the horizontal axis and the mass of 30 kg on the vertical axis in graph (1) below, and select **RSQ□40-□□R** that falls in the cylinder operating range.

(Example 2) Transfer speed of 15 m/min., Mass of transferred object of 60 kg, Friction coefficient μ = 0.1, Lever type (Lever type with lock mechanism)

<How to read the graphs>
To select a cylinder based on the specifications above, find the intersection of the speed of 15 m/min. on the horizontal axis and the mass of 60 kg on the vertical axis in graph (3) below, and select **RSQ□40-□□D** that falls in the cylinder operating range.

Roller Type/Round Bar Type/Chamfered Type **Graph (1)**

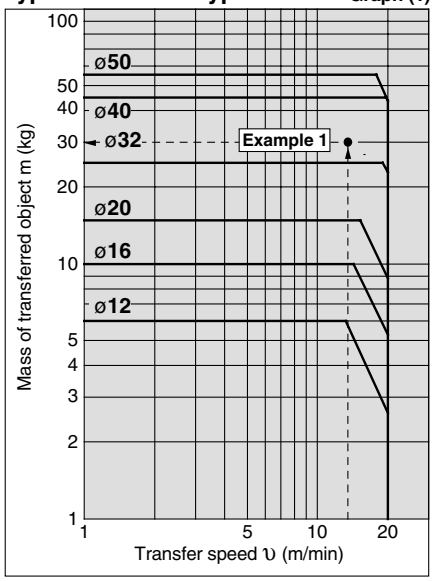

Lever Type (With shock absorber) Friction coefficient μ = 0 **Graph (2)**

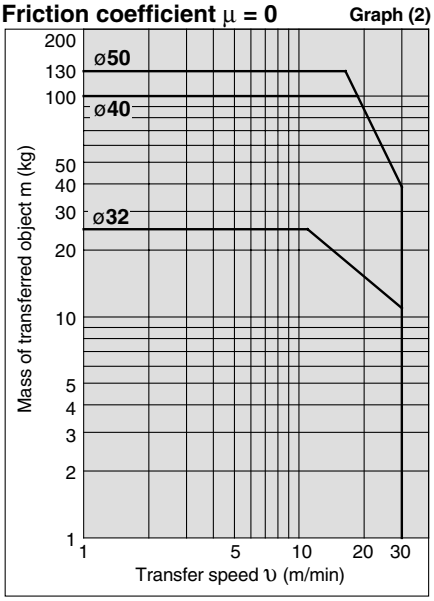

Lever Type (With shock absorber) Friction coefficient μ = 0.1 **Graph (3)**

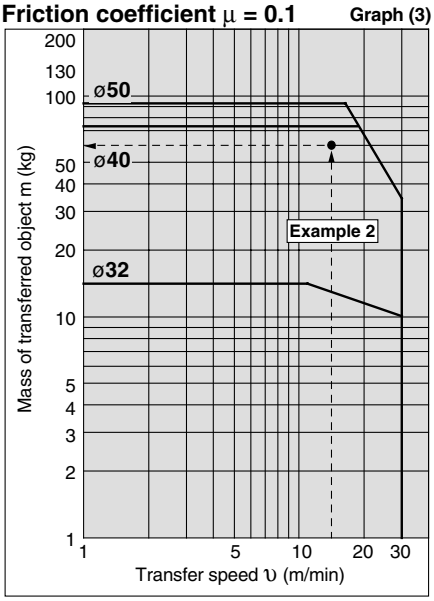

∗ Lever-type mass of transferred object and transfer speed graphs (graphs (2) and (3)) show the values at room temperature (20 to 25°C).
∗ When selecting cylinders, confirm the Specific Product Precautions as well.

Lateral Load and Operating Pressure

The larger the lateral load, the higher the operating pressure required for the stopper cylinder. Set the operating pressure using the graphs as a guide.
(Applicable for round bar, roller and chamfered type rod end configurations.)

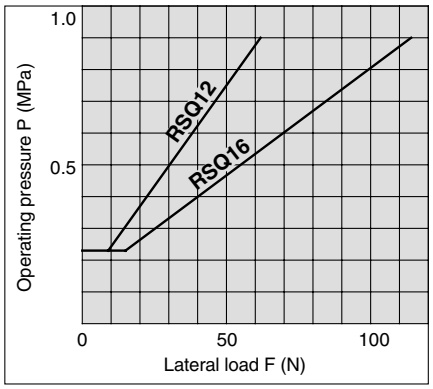

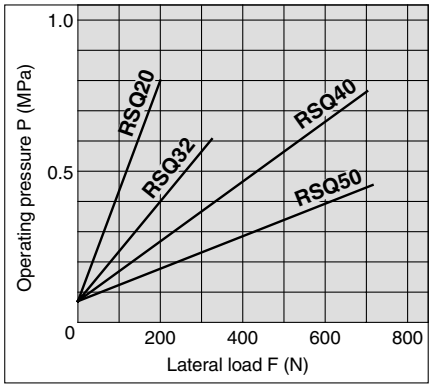

Construction

Roller rod end

ø12

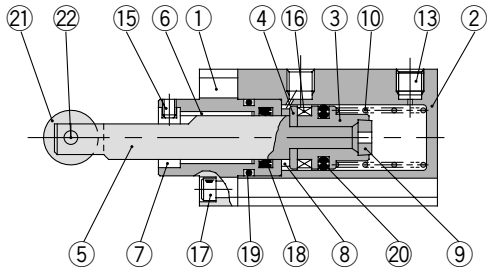

ø16

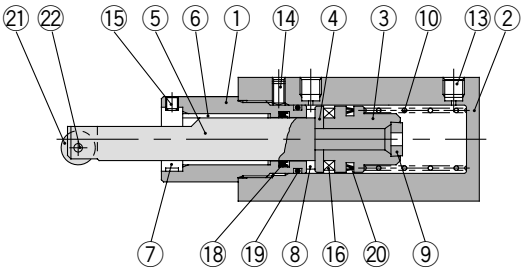



Round bar rod end type (D)



Chamfered rod end type (K)

ø20

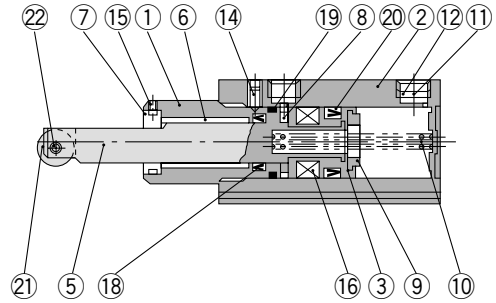

ø32, ø40, ø50

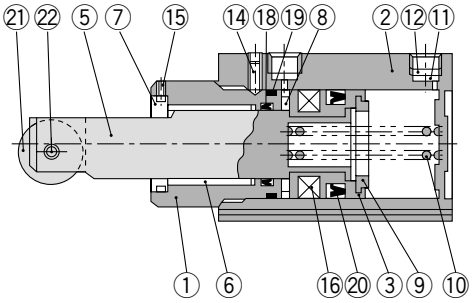

Built-in shock absorber Lever rod end type (ø32, ø40, ø50 only)

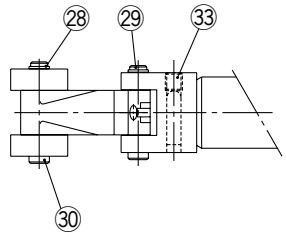

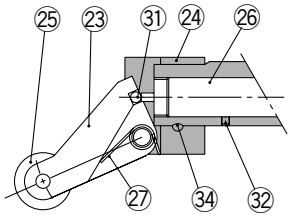

Only one roller is provided for ø32.

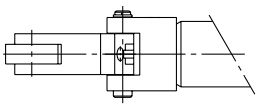

Component Parts

No.	Description	Material	Note
1	**Rod cover**	Aluminum alloy	Anodized*
2	**Cylinder tube**	Aluminum alloy	Hard anodized
3	**Piston**	Aluminum alloy	Chromated
4	**Spacer for switch**	Aluminum alloy	ø12, ø16 only
5	**Piston rod**	ø12, ø16, ø20 Stainless steel ø32, ø40, ø50 Carbon steel	Hard chrome plated
6	**Bushing**	Copper alloy	
7	**Non-rotating guide**	Rolled steel	Non-rotating type only
8	**Bumper A**	Urethane	
9	**Bumper B**	Urethane	
10	**Return spring**	Steel wire	Zinc chromated (Except double acting)
11	**Element**	Sintered metallic BC	ø20 to ø50 (Single acting only)
12	**Retaining ring**	Carbon tool steel	ø20 to ø50 (Single acting only)
13	**Plug with fixed orifice**	Alloy steel	ø12, ø16 only
14	**Hexagon socket head set screw**	Chromium molybdenum steel	Except ø12
15	**Hexagon socket head set screw**	Chromium molybdenum steel	
16	**Magnet**	—	
17	**Hexagon socket head cap screw**	Alloy steel	ø12 only
18	**Rod seal**	NBR	
19	**Gasket**	NBR	
20	**Piston seal**	NBR	
Roller type			
21	**Roller A**	Resin	
22	**Spring pin**	Carbon tool steel	

Component Parts (For single acting)

No.	Description	Material	Note
Lever type			
23	**Lever**	Cast iron	
24	**Lever holder**	Rolled steel	
25	**Roller B**	Resin	
26	**Shock absorber**	—	ø32-RB1007-X225 ø40, 50-RB1407-X552
27	**Lever spring**	Stainless steel wire	
28	**Type C retaining ring for axis**	Carbon tool steel	
29	**Lever pin**	Carbon steel	
30	**Roller pin**	Carbon steel	
31	**Steel balls**	High carbon chrome bearing steel	
32	**Hexagon socket head set screw**	Chromium molybdenum steel	
33	**Hexagon socket head set screw**	Chromium molybdenum steel	
34	**One-side tapered pin**	Carbon steel	

Replacement Parts/Seal Kit

Bore size (mm)	Kit no.			Contents
	Double acting	Double acting with spring loaded	Single acting	
12	RSQ12D-PS	RSQ12T-PS		Set of above nos. ⑱, ⑲, ⑳
16	RSQ16D-PS	RSQ16B-PS	RSQ16T-PS	
20	RSQ20D-PS	RSQ20B-PS	RSQ20T-PS	
32	RSQ32D-PS	RSQ32B-PS	RSQ32T-PS	
40	RSQ40D-PS	RSQ40B-PS	RSQ40T-PS	
50	RSQ50D-PS	RSQ50B-PS	RSQ50T-PS	

∗ Seal kit includes ⑱, ⑲, ⑳. Order the seal kit, based on each bore size.
∗ Since the seal kit does not include a grease pack, order it separately.
Grease pack part no.: GR-S-010 (10g)

Replacement Parts: Shock Absorber

Bore size (mm)	Kit no.
32	RB1007-X225
40, 50	RB1407-X552

Lever rod end type (With lock mechanism and cancel cap)
(ø32, ø40, ø50)

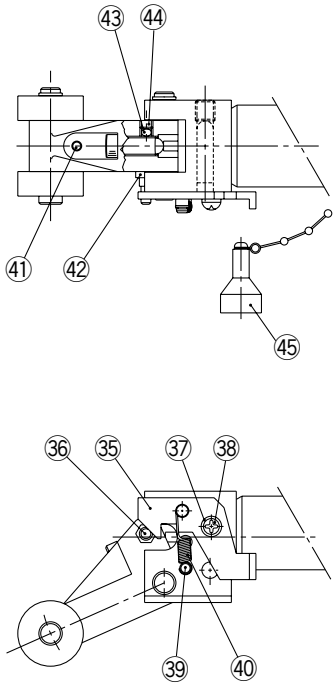

Component Parts

No.	Description	Material	Note
With lock mechanism			
35	**Bracket**	Carbon steel	
36	**Pin B**	Carbon steel	
37	**Spacer**	Carbon steel	
38	**Round head Phillips screw**	Rolled steel	
39	**Pin A**	Rolled steel	
40	**Bracket spring**	Steel wire	
41	**Hexagon socket head cap set screw**	Chromium molybdenum steel	
42	**Spring washer**	Steel wire	
43	**Urethane ball**	Urethane	
44	**Hexagon socket head cap set screw**	Chromium molybdenum steel	
With cancel cap			
45	**Cancel cap**	Aluminum alloy	

Rod End Configuration: Round Bar Type

Basic style: Through-hole mounting, Screw mounting

These 5 figures show the piston rod extended.

Screw mounting style: Both ends tapped style (mm)

RS□QA

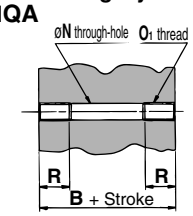

Model	B	N	O_1	R
RS□QA16	41.5	3.5	M4 x 0.7	7
RS□QA20	45	5.5	M6 x 1	10
RS□QA32	48	5.5	M6 x 1	10
RS□QA40	52.5	5.5	M6 x 1	10
RS□QA50	54	6.6	M8 x 1.25	14

∗ Dimensions other than above are the same as below drawings.

Bore size: ø12 **RS□QB12-10□**

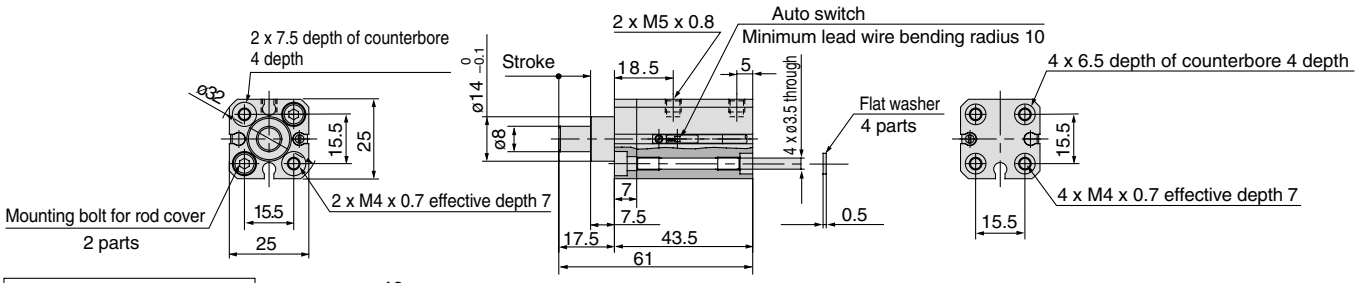

Bore size: ø16, ø20 **RS□QB $^{16}_{20}$-□□**

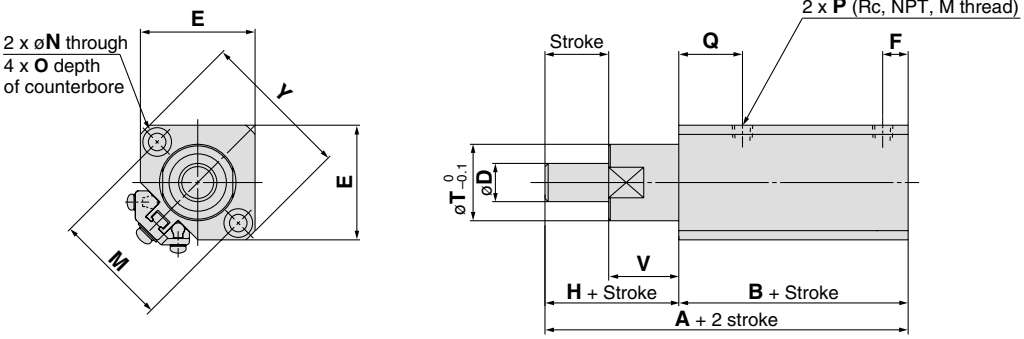

Bore size: ø32, ø40, ø50 **RS□QB $^{32}_{40}_{50}$-□□**

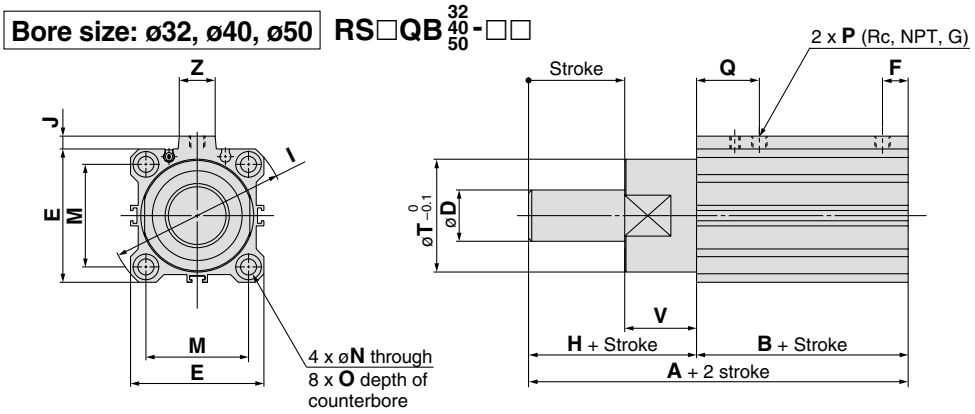

Built-in One-touch fittings (ø20 to ø50)

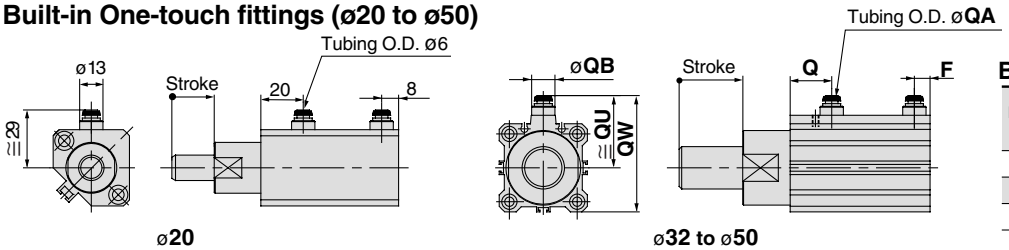

Built-in One-touch Fittings (mm)

Bore size (mm)	Applicable tubing O.D. QA	F	Q	QB	QU	QW
32	6	7.5	20	13	38	60.5
40	6	8	24.5	13	42	68
50	8	9.5	26	16	50	82

(mm)

Bore size (mm)	A	B	D	E	F	H	I	J	M	N	O	P	Q	T	V	Y	Z
16	59.5	41.5	10	29	6	18	—	—	28	3.5	6.5 depth 4	M5 x 0.8	17	20	18	38	—
20	67	45	12	36	8	22	—	—	36	5.5	9 depth 7	$^1/_8$	20	24	22	47	—
32	68	48	20	45	7.5	20	60	4.5	34	5.5	9 depth 7	$^1/_8$	20	36	20	—	14
40	80.5	52.5	25	52	8	28	69	5	40	5.5	9 depth 7	$^1/_8$	24.5	44	28	—	14
50	82	54	25	64	8	28	86	7	50	6.6	11 depth 8	$^1/_8$	24.5	56	28	—	19

Note 1) M thread (M5 x 0.8) is applicable for ø12 and ø16 piping ports.
TF (G thread) for ø20 also indicates M5 x 0.8.
Note 2) For the auto switch mounting position and its mounting height, refer to page 1384.
Note 3) These figures show the piston rod extended.
Note 4) In the case of single acting type, a One-touch fitting is on the rod side only.

Rod End Configuration: Chamfered (Non-rotating piston rod)

Basic style: Through-hole mounting, Screw mounting

These 5 figures show the piston rod extended.

Screw mounting style: Both ends tapped style (mm)

RS□QA

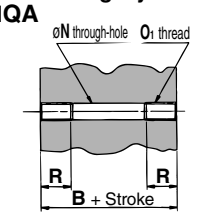

Model	B	N	O_1	R
RS□QA16	41.5	3.5	M4 x 0.7	7
RS□QA20	45	5.5	M6 x 1	10
RS□QA32	48	5.5	M6 x 1	10
RS□QA40	52.5	5.5	M6 x 1	10
RS□QA50	54	6.6	M8 x 1.25	14

∗ Dimensions other than above are the same as below drawings.

Bore size: ø12 **RS□QB12-10□K**

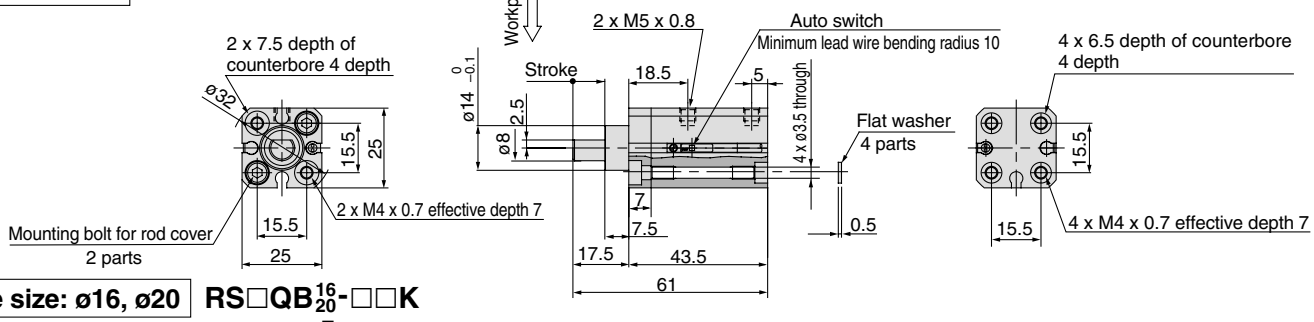

Bore size: ø16, ø20 **RS□QB$^{16}_{20}$-□□K**

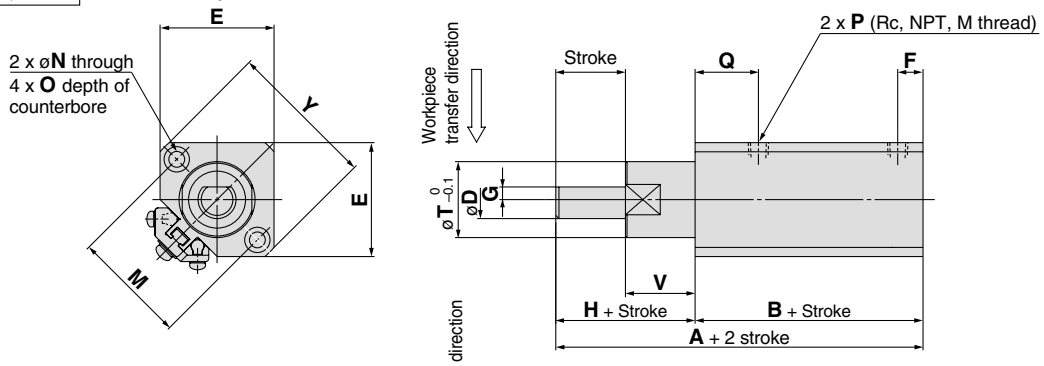

Bore size: ø32, ø40, ø50 **RS□QB$^{32}_{40}$-□□K**

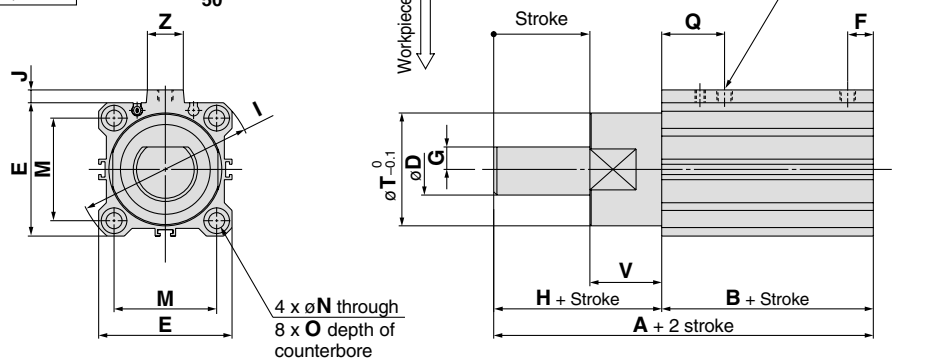

Built-in One-touch fittings (ø20 to ø50)

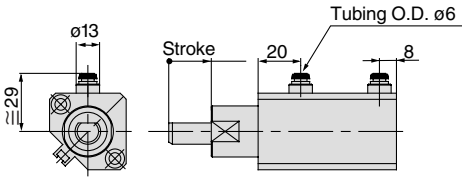

ø20

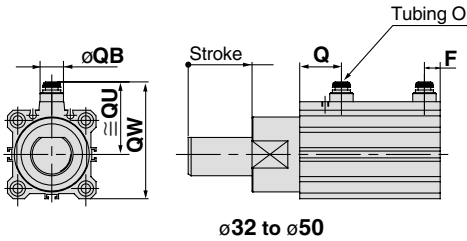

ø32 to ø50

Built-in One-touch Fittings (mm)

Bore size (mm)	Applicable tubing O.D. **QA**	F	Q	QB	QU	QW
32	6	7.5	20	13	38	60.5
40	6	8	24.5	13	42	68
50	8	9.5	26	16	50	82

(mm)

Bore size (mm)	A	B	D	E	F	G	H	I	J	M	N	O	P	Q	T	V	Y	Z
16	59.5	41.5	10	29	6	3	18	—	—	28	3.5	6.5 depth 4	M5 x 0.8	17	20	18	38	—
20	67	45	12	36	8	4	22	—	—	36	5.5	9 depth 7	1/8	20	24	22	47	—
32	68	48	20	45	7.5	8	20	60	4.5	34	5.5	9 depth 7	1/8	20	36	20	—	14
40	80.5	52.5	25	52	8	10	28	69	5	40	5.5	9 depth 7	1/8	24.5	44	28	—	14
50	82	54	25	64	8	10	28	86	7	50	6.6	11 depth 8	1/8	24.5	56	28	—	19

Note 1) M thread (M5 x 0.8) is applicable for ø12 and ø16 piping ports.
TF (G thread) for ø20 also indicates M5 x 0.8.
Note 2) For the auto switch mounting position and its mounting height, refer to page 1384.
Note 3) These figures show the piston rod extended.
Note 4) In the case of single acting type, a One-touch fitting is on the rod side only.

Rod End Configuration: Roller Type

Basic style: Through-hole mounting, Screw mounting

These 5 figures show the piston rod extended.

Screw mounting style: Both ends tapped style
RS□QA

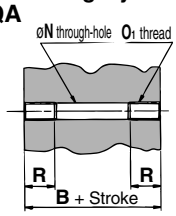

(mm)

Model	B	N	O_1	R
RS□QA16	41.5	3.5	M4 x 0.7	7
RS□QA20	45	5.5	M6 x 1	10
RS□QA32	48	5.5	M6 x 1	10
RS□QA40	52.5	5.5	M6 x 1	10
RS□QA50	54	6.6	M8 x 1.25	14

* Dimensions other than above are the same as below drawings.

Bore size: ø12 **RS□QB12-10□R**

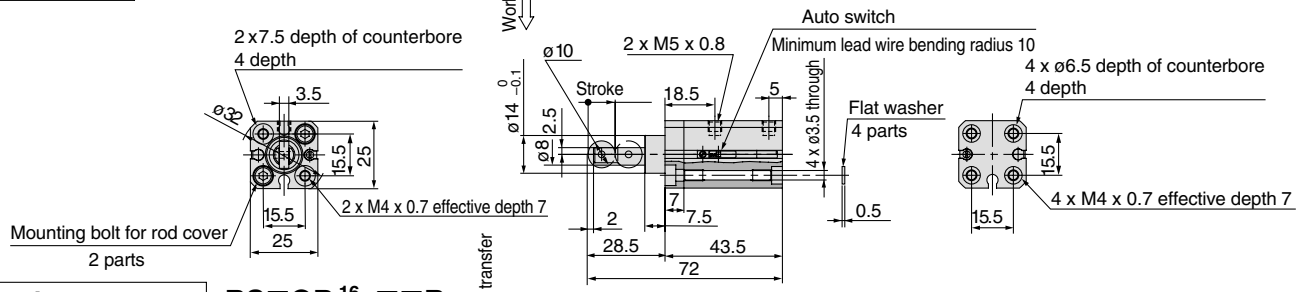

Bore size: ø16, ø20 **RS□QB $^{16}_{20}$-□□R**

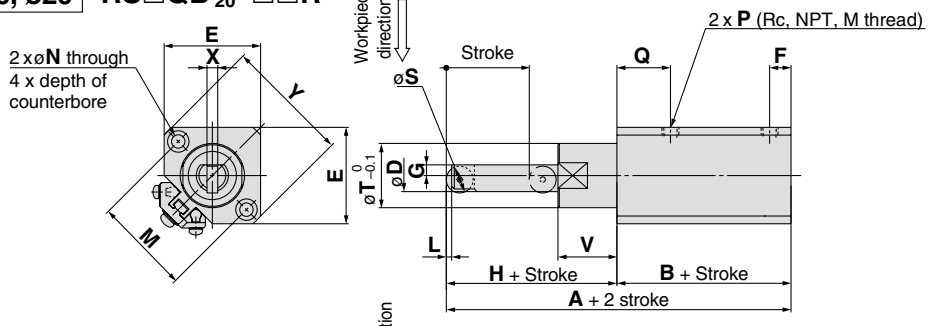

Bore size: ø32, ø40, ø50 **RS□QB $^{32}_{40}_{50}$□□R**

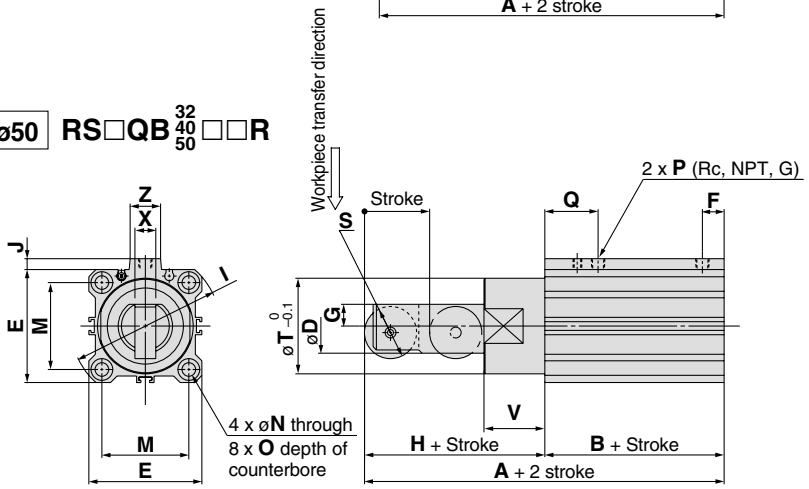

Built-in One-touch fittings (ø20 to ø50)

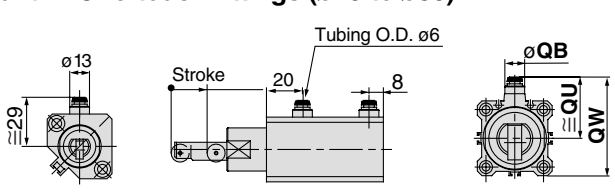

Built-in One-touch Fittings (mm)

Bore size (mm)	Applicable tubing O.D. **QA**	F	Q	QB	QU	QW
32	6	7.5	20	13	38	60.5
40	6	8	24.5	13	42	68
50	8	9.5	26	16	50	82

(mm)

Bore size (mm)	A	B	D	E	F	G	H	I	J	L	M	N	O	P	Q	S	T	V	X	Y	Z
16	68	41.5	10	29	6	3	26.5	—	—	2	28	3.5	6.5 depth 4	M5 x 0.8	17	8	20	18	3.5	38	—
20	78	45	12	36	8	4	33	—	—	2	36	5.5	9 depth 7	$^1/_8$	20	10	24	22	4	47	—
32	87	48	20	45	7.5	8	39	60	4.5	3	34	5.5	9 depth 7	$^1/_8$	20	18	36	20	8	—	14
40	105.5	52.5	25	52	8	10	53	69	5	4	40	5.5	9 depth 7	$^1/_8$	24.5	24	44	28	9	—	14
50	107	54	25	64	8	10	53	86	7	4	50	6.6	11 depth 8	$^1/_8$	24.5	24	56	28	9	—	19

Note 1) M thread (M5 x 0.8) is applicable for ø12 and ø16 piping ports.
TF (G thread) for ø20 also indicates M5 x 0.8.
Note 2) For the auto switch mounting position and its mounting height, refer to page 1384.
Note 3) These figures show the piston rod extended.
Note 4) In the case of single acting type, a One-touch fitting is on the rod side only.

Rod End Configuration: Lever Type with Shock Absorber

Basic style: Through-hole mounting, Screw mounting

These 3 figures show the piston rod extended.

Bore size: ø32 **RS□QB32-□□L**

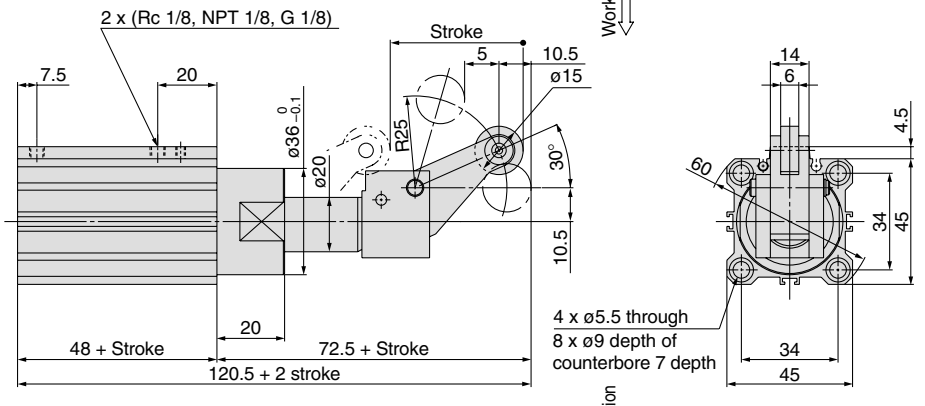

Bore size: ø40, ø50 **RS□QB $^{40}_{50}$-□□L**

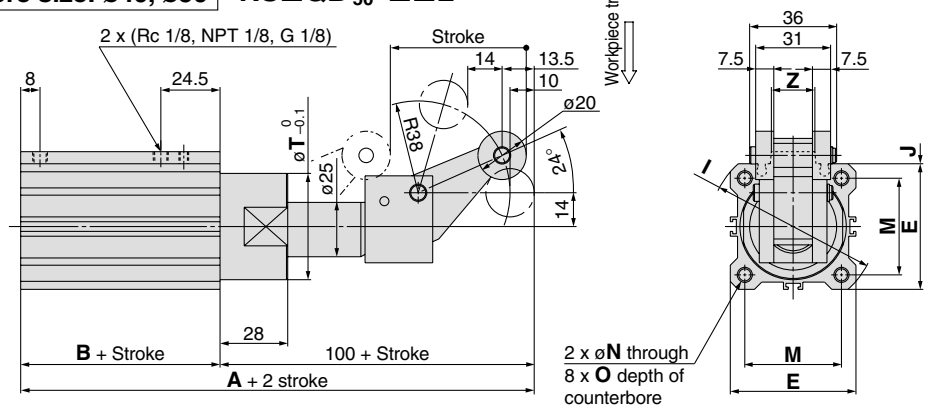

Screw mounting style: Both ends tapped style

RS□QA

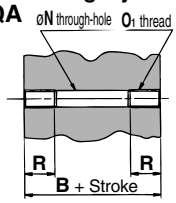

(mm)

Model	B	N	O_1	R
RS□QA32	48	5.5	M6 x 1	10
RS□QA40	52.5	5.5	M6 x 1	10
RS□QA50	54	6.6	M8 x 1.25	14

∗ Dimensions other than above are the same as below drawings.

Built-in One-touch fittings

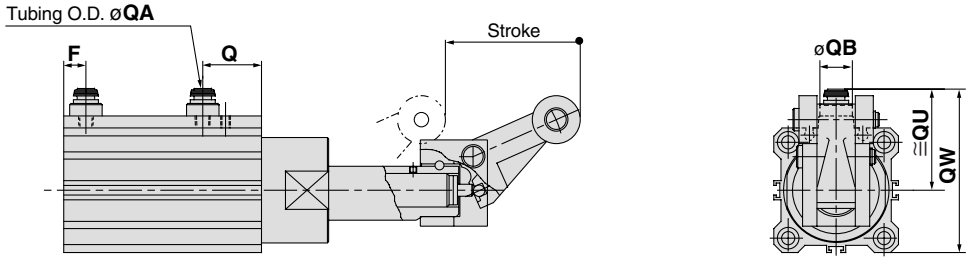

Built-in One-touch Fittings (mm)

Bore size (mm)	Applicable tubing O.D. **QA**	F	Q	QB	QU	QW
32	6	7.5	20	13	38	60.5
40	6	8	24.5	13	42	68
50	8	9.5	26	16	50	82

(mm)

Bore size (mm)	A	B	E	I	J	M	N	O	T	Z
40	152.5	52.5	52	69	5	40	5.5	9 depth 7	44	14
50	154	54	64	86	7	50	6.6	11 depth 8	56	19

Note 1) For the auto switch mounting position and its mounting height, refer to page 1384.
Note 2) These figures show the piston rod extended.
Note 3) In the case of single acting type, a One-touch fitting is on the rod side only.

Rod End Configuration: Lever Type with Shock Absorber

Variable energy absorbing type/ Through-hole mounting, Screw mounting style Adjustable shock absorber stroke

These 3 figures show the piston rod extended.

Screw mounting style: Both ends tapped style (mm)

RS□QA

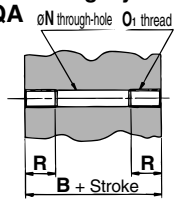

Model	B	N	O_1	R
RS□QA32	48	5.5	M6 x 1	10
RS□QA40	52.5	5.5	M6 x 1	10
RS□QA50	54	6.6	M8 x 1.25	14

∗ Dimensions other than above are the same as below drawings.

Bore size: ø32 **RS□QB32-□□B**

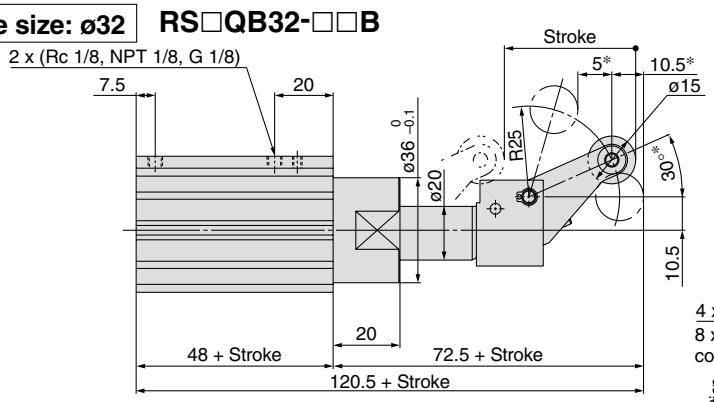

Workpiece transfer direction

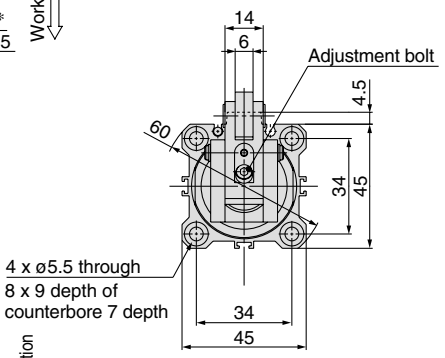

Bore size: ø40, ø50 **RS□QB$^{40}_{50}$-□□B**

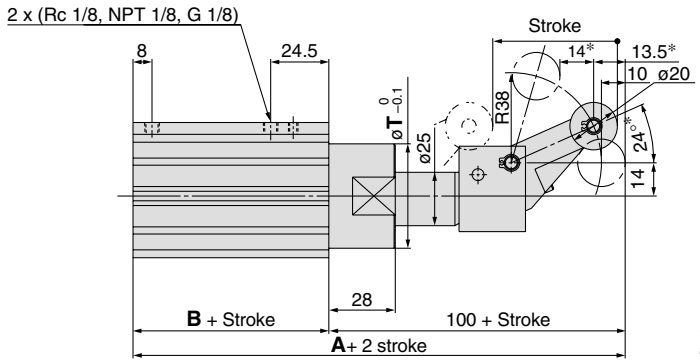

Workpiece transfer direction

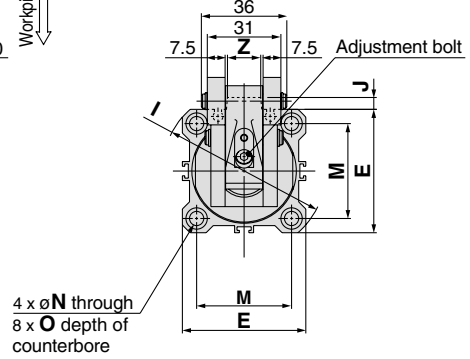

With cancel cap **RS□QB□-□□C**

∗ Dimensions when equipped with cancel cap are the same as the drawing above.

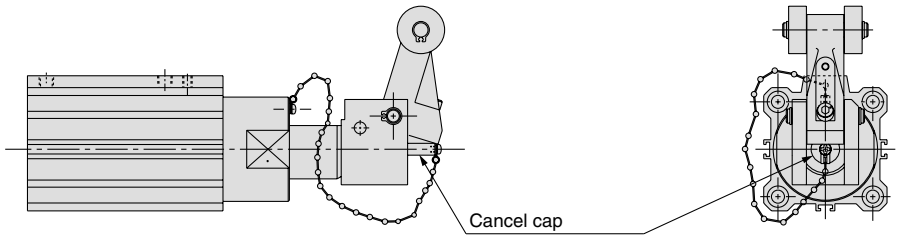

∗ These figures show dimensions when set for maximum energy absorbing capacity. (mm)

Bore size (mm)	A	B	E	I	J	M	N	O	T	Z
40	152.5	52.5	52	69	5	40	5.5	9 depth 7	44	14
50	154	54	64	86	7	50	6.6	11 depth 8	56	19

Note 1) For the auto switch mounting position and its mounting height, refer to page 1384.
Note 2) These figures show the piston rod extended.
Note 3) In the case of single acting type, a One-touch fitting is on the rod side only.
Note 4) The figures show the dimensions when the adjustment bolt is lowered (when energy absorption is at its maximum).
However, these dimensions change within the ranges shown below as the adjustment bolt is raised (energy absorption is reduced).
ø32···30°* → 20°*, 10.5* → 9*, 5* → 6*
ø40, 50···24°* → 16°*, 13.5* → 11.5*, 14* → 16*

Rod End Configuration: Lever Type with Shock Absorber

Variable energy absorbing type/ Through-hole mounting, Screw mounting style With lock mechanism

These 3 figures show the piston rod extended.

Screw mounting style: Both ends tapped style (mm)

RS□QA

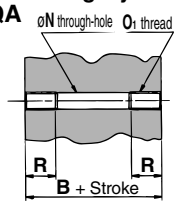

Model	B	N	O_1	R
RS□QA32	48	5.5	M6 x 1	10
RS□QA40	52.5	5.5	M6 x 1	10
RS□QA50	54	6.6	M8 x 1.25	14

∗ Dimensions other than above are the same as below drawings.

Bore size: ø32 **RS□QB32-□□D**

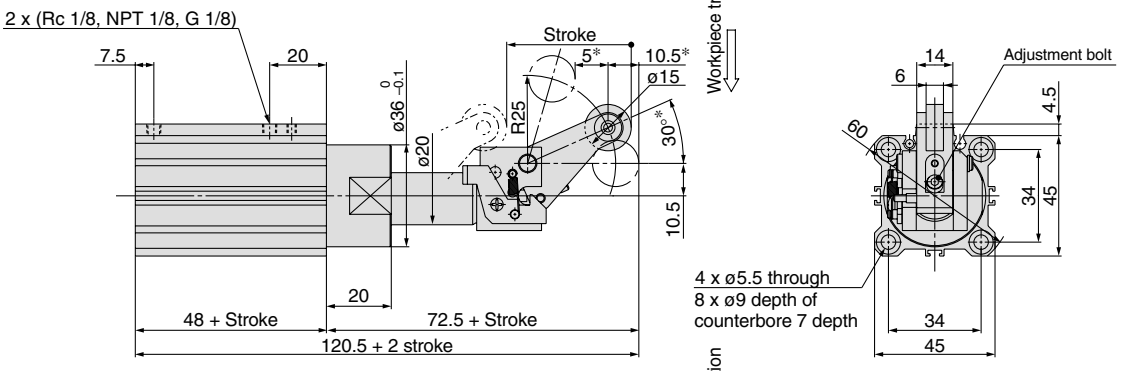

Bore size: ø40, ø50 **RS□QB$^{40}_{50}$-□□D**

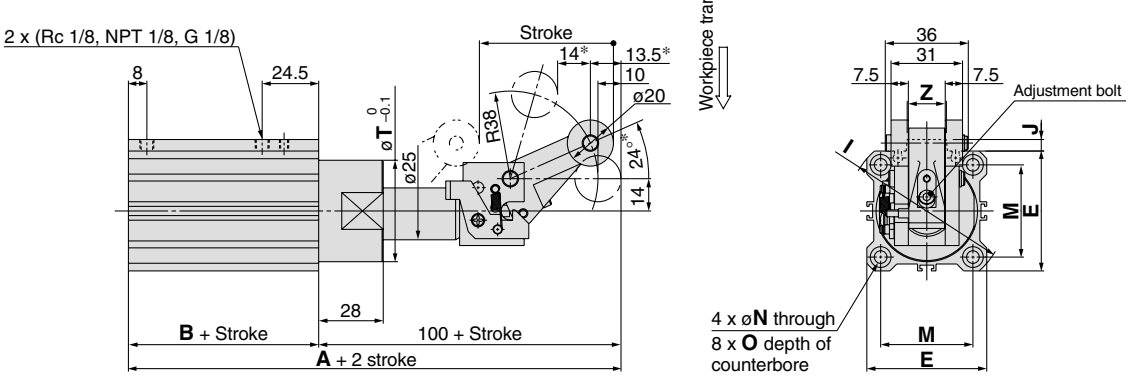

With lock mechanism + Cancel cap **RS□QB□□-□□E**

∗ Dimensions when equipped with lock and cancel cap are the same as the figure drawing.

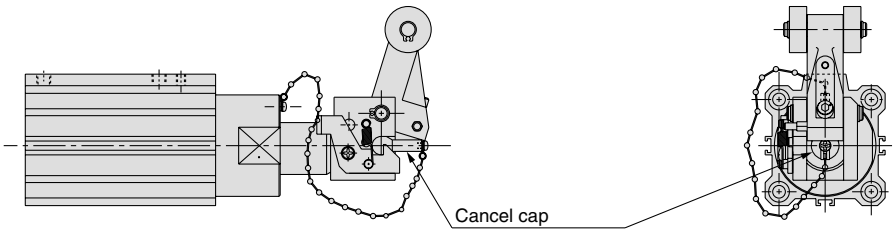

∗ These figures show dimensions when set for maximum energy absorbing capacity. (mm)

Bore size (mm)	A	B	E	I	J	M	N	O	T	Z
40	152.5	52.5	52	69	5	40	5.5	9 depth 7	44	14
50	154	54	64	86	7	50	6.6	11 depth 8	56	19

Note 1) For the auto switch mounting position and its mounting height, refer to page 1384.
Note 2) These figures show the piston rod extended.
Note 3) In the case of single acting type, a One-touch fitting is on the rod side only.
Note 4) The figures shows the dimensions when the adjustment bolt is lowered (when energy absorption is at its maximum).
However, these dimensions change within the ranges shown below as the adjustment bolt is raised (energy absorption is reduced).
ø32···30°* → 20°*, 10.5* → 9*, 5* → 6*
ø40, 50···24°* → 16°*, 13.5* → 11.5*, 14* → 16*

Auto Switch Proper Mounting Position (Detection at Stroke End) and Its Mounting Height

ø12 **D-A9□** **D-A9□V**
D-M9□ **D-M9□V**
D-M9□W **D-M9□WV**
D-M9□AL **D-M9□AVL**

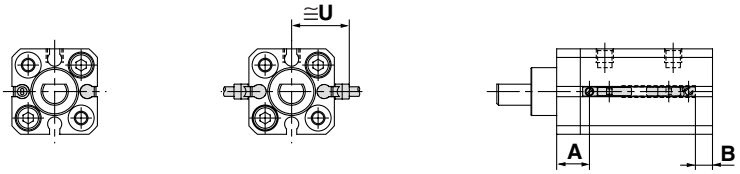

D-A9□
D-M9□
D-M9□W
D-A9□V
D-M9□V
D-M9□WV
D-M9□AL
D-M9□AVL

ø16, 20

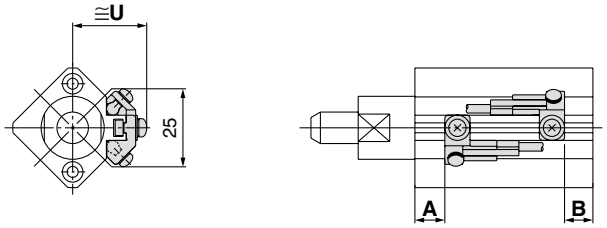

D-A7□
D-A80
D-A7□H
D-A80H
D-F7□
D-J79
D-F7□W
D-J79W
D-F79F
D-F7NTL
D-F7BAL
D-A73C
D-A80C
D-J79C
D-A79W
D-F7□WV
D-F7□V
D-F7BAVL

ø16, ø20

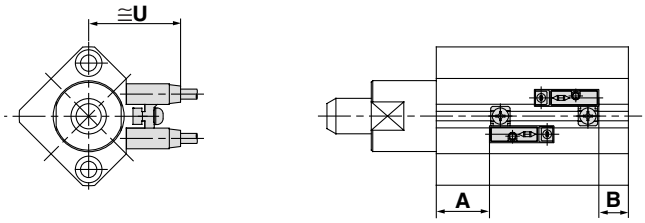

ø32 to ø50

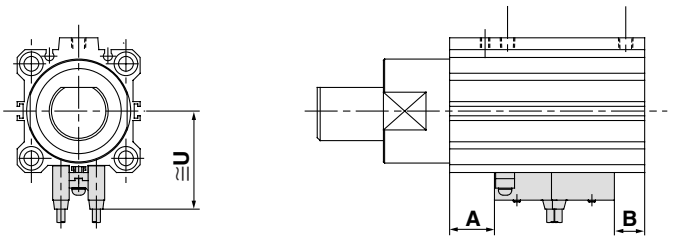

ø32 to ø50
D-A9□ **D-A9□V**
D-M9□ **D-M9□V**
D-M9□W **D-M9□WV**
D-M9□AL **D-M9□AVL**

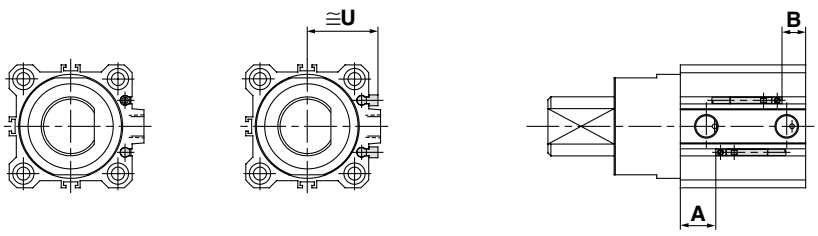

Auto Switch Proper Mounting Position (Detection at Stroke End) and Its Mounting Height

Auto Switch Proper Mounting Position

(mm)

Auto switch model / Bore size (mm)	D-A9□ D-A9□V		D-M9□ D-M9□V D-M9□W D-M9□WV D-M9□AL D-M9□AVL		D-A73 D-A80		D-A72/A7□H/A80H D-A73C/A80C D-F7□/J79 D-F7□V/J79C D-F7BAVL/F7BAL D-F7□W/J79W D-F7□WV/F79F		D-F7NTL		D-A79W	
	A	B	A	B	A	B	A	B	A	B	A	B
12	9	7	13	11	—	—	—	—	—	—	—	—
16	9	9	13	13	11.5	11.5	12	12	17	17	9	9
20	15	7	19	11	17.5	9.5	18	10	23	15	15	7
32	17	11	21	15	18	12	18.5	12.5	23.5	17.5	15.5	9.5
40	21.5	11	25.5	15	22.5	12	23	12.5	28	17.5	20	9.5
50	29.5	4.5	33.5	8.5	30.5	5.5	31	6	36	11	28	3

Note) Adjust the auto switch after confirming the operating conditions in the actual setting.

Auto Switch Mounting Height

(mm)

Auto switch model / Bore size (mm)	D-A9□V	D-M9□V D-M9□WV D-M9□AVL	D-A7□ D-A80	D-A7□H D-A80H/F7□ D-J79/F7□W D-F7BAL D-J79W D-F79F D-F7NTL	D-A73C D-A80C	D-F7□V D-F7□WV D-F7BAVL	D-J79C	D-A79W
	U	U	U	U	U	U	U	U
12	17	19.5	—	—	—	—	—	—
16	23.5	23.5	22.5	23.5	29.5	26	29	25
20	25.5	25.5	24.5	25.5	31.5	28	31	27
32	27	29	31.5	32.5	38.5	35	38	34
40	30.5	32.5	35	36	42	38.5	41.5	37.5
50	36.5	38.5	41	42	48	44.5	47.5	43.5

Operating Range

(mm)

Auto switch model	Bore size (mm)					
	12	16	20	32	40	50
D-A9□/A9□V	6	9.5	9	9.5	9.5	9.5
D-M9□/M9□V D-M9□W/M9□WV D-M9□AL/M9□AVL	3	5	5.5	6	6	7
D-A7□/A80 D-A7H/A80H D-A73C/A80C	—	12	12	12	11	10
D-A79W	—	13	13	13	14	14
D-F7□/J79 D-F7□V/J79C D-F7□W/J7□WV D-F7BAL/F7BAVL D-F79F/F7NTL	—	6	5.5	6	6	6

∗ Since this is a guideline including hysteresis, not meant to be guaranteed. (Assuming approximately ±30% dispersion) There may be the case to change substantially depending on an ambient environment.

∗ The values above for a bore size ø12 and over ø32 of D-A9□(V)/M9□(V)/M9□W(V)/M9□A(V)L types are measured when the conventional switch installation groove is attached without using the auto switch mounting bracket BQ2-012.

Auto Switch Mounting Bracket: Part No.

Auto switch mounting surface / Auto switch model	Bore size (mm)			
	ø12	ø16, ø20	ø32, ø40, ø50	
	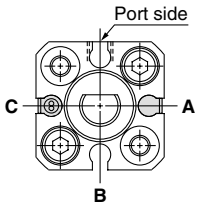	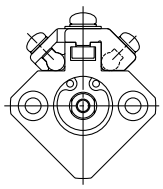	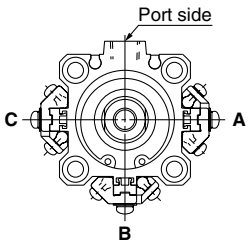	
	Auto switch mounting surface	Auto switch mounting surface	Auto switch mounting surface	
	A, B, C side	Only auto switch mounting rail surface	Port side	A, B, C side
D-A9□ D-A9□V D-M9□ D-M9□V D-M9□W D-M9□WV D-M9□AL D-M9□AVL	Auto switch mounting brackets are not required.	①BQ-1 ②BQ2-012 Two kinds of auto switch mounting brackets are used as a set. 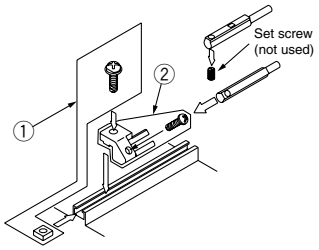	Auto switch mounting brackets are not required.	①BQ-2 ②BQ2-012 Two kinds of auto switch mounting brackets are used as a set. 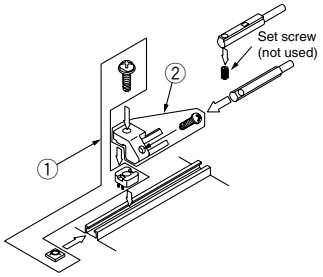

Note 1) For each cylinder series, when a compact auto switch is mounted on the three sides (A, B and C above) other than the port side of bore sizes ø32 to ø50, the auto switch mounting brackets above are required. Order them separately from cylinders.
Ordering example:
RSDQB32-20-M9BW.....1 unit
BQ-2.....2 pcs.
BQ2-012.....2 pcs.

Note 2) Auto switch mounting brackets and auto switches are shipped together with cylinders.

Auto switch model	Bore size (mm)				
	16	20	32	40	50
D-A7□/A80 D-A73C/A80C D-A7□H/A80H D-A79W D-F7□/J79 D-F7□V D-J79C D-F7□W/J79W D-F7□WV D-F7BAL/F7BAVL D-F79F/F7NTL	BQ-1		BQ-2		

Note 3) Auto switch mounting brackets and auto switches are shipped together with cylinders.

[Mounting screw set made of stainless steel]

The following set of mounting screws made of stainless steel (including nuts) is available. Use it in accordance with the operating environment. (Please order BQ-2 separately, since auto switch spacers (for BQ-2) are not included.)

BBA2: For D-A7/A8/F7/J7 types

D-F7BAL/F7BAVL auto switches are set on the cylinder with the stainless steel screws above when shipped. When an auto switch is shipped independently, BBA2 is attached.

Note 4) When D-M9□A(V)L type is mounted on a side other than the ø32, ø40 or ø50 port side, order auto switch mounting brackets BQ2-012S or BQ-2, or a stainless steel screw set BBA2 separately.

Note 5) Refer to page 1817 for the details of BBA2.

Auto Switch Mounting Bracket Mass

Auto switch mounting bracket part no.	Mass (g)
BQ-1	1.5
BQ-2	1.5
BQ2-012	5

Besides the models listed in How to Order, the following auto switches are applicable.

Other Applicable Auto Switches/Refer to pages 1719 to 1827 for detailed auto switch specifications.

Auto switch type	Model	Electrical entry (Fetching direction)	Features
Reed	D-A73	Grommet (Perpendicular)	—
	D-A80		Without indicator light
	D-A73H, A76H	Grommet (In-line)	—
	D-A80H		Without indicator light
Solid state	D-F7NV, F7PV, F7BV	Grommet (Perpendicular)	—
	D-F7NWV, F7BWV		Diagnostic indication (2-color indication)
	D-F7BAVL		Water resistant (2-color indication)
	D-F79, F7P, J79	Grommet (In-line)	—
	D-F79W, F7PW, J79W		Diagnostic indication (2-color indication)
	D-F7BAL		Water resistant (2-color indication)
	D-F7NTL		With timer

∗ For solid state auto switches, auto switches with a pre-wired connector are also available. Refer to pages 1784 and 1785 for details.
∗ Normally closed (NC = b contact), solid state switch (D-F9G/F9H types) are also available. Refer to page 1746 for details.
∗ D-A7/A8/F7/J7 cannot be mounted on ø12.

Stopper Cylinder / Adjustable Mounting Height

Series RSG

ø40, ø50

How to Order

RSG 40 □ – 30 D □ – □

With auto switch **RSDG** 40 □ – 30 D □ – M9BW □ – □

With auto switch
(Built-in magnet)

Bore size

40	40 mm
50	50 mm

Port type

Nil	Rc
TN	NPT
TF	G
F	Built-in One-touch fittings

Cylinder stroke (mm)

40, 50	20, 25, 30

Action

D	Double acting
B	Double acting with spring loaded
T	Single acting (Spring extend)

Rod end configuration

Symbol	Configuration	Application
Nil	Round bar type	—
K	Chamfered type	—
R	Roller type	—
L	Lever type (Non-adjustable)	Basic style
B	Lever type (Energy absorbing, Adjustable deformation)	—
C		With cancel cap
D		With lock menchanism
E		With lock & cancel

Auto switch

Nil	Without auto switch

∗ For the applicable auto switch model, refer to the table below.

Number of auto switches

Nil	2 pcs.
S	1 pc.

Made to Order Specifications
For details, refer to page 1388.

Built-in Magnet Cylinder Model

If a built-in magnet cylinder without an auto switch is required, there is no need to enter the symbol for the auto switch.
(Example) RSDG50-25D

Applicable Auto Switch/Refer to pages 1719 to 1827 for further information on auto switches.

Type	Special function	Electrical entry	Indicator light	Wiring (Output)	Load voltage DC		Load voltage AC	Auto switch model: Applicable bore size	Lead wire length (m) 0.5 (Nil)	1 (M)	3 (L)	5 (Z)	None (N)	Pre-wired connector	Applicable load	
Solid state switch	—	Grommet	Yes	3-wire (NPN)	24 V	5 V,12 V	—	**M9N**	●	●	●	○	—	○	IC circuit	Relay, PLC
				3-wire (PNP)				**M9P**	●	●	●	○	—	○		
				2-wire		12 V		**M9B**	●	●	●	○	—	○	—	
		Connector						**H7C**	●	—	●	●	●	—		
	Diagnostic indication (2-color indication)	Grommet		3-wire (NPN)		5 V,12 V		**M9NW**	●	●	●	○	—	○	IC circuit	
				3-wire (PNP)				**M9PW**	●	●	●	○	—	○		
				2-wire		12 V		**M9BW**	●	●	●	○	—	○	—	
	Water resistant (2-color indication)							**H7BA**	—	—	●	○	—	○		
	With diagnostic output (2-color indication)			4-wire (NPN)		5 V,12 V		**H7NF**	●	—	●	○	—	○	IC circuit	
Reed switch	—	Grommet	Yes	3-wire (NPN equivalent)	—	5 V	—	**A96**	●	—	●	—	—	—	IC circuit	Relay, PLC
			No	2-wire	24 V	12 V	100 V	**A93**	●	—	●	—	—	—	—	
							100 V or less	**A90**	●	—	●	—	—	—	IC circuit	
		Connector	Yes				—	**C73C**	●	—	●	●	●	—	—	
			No				24 V or less	**C80C**	●	—	●	●	●	—	IC circuit	

∗ Lead wire length symbols: 0.5 m ····· Nil (Example) M9NW
1 m ····· M (Example) M9NWM
3 m ····· L (Example) M9NWL
5 m ····· Z (Example) M9NWZ
None ····· N (Example) H7CN

∗ Solid state auto switches marked with "○" are produced upon receipt of order.
∗ D-A9□V□/M9□V□/M9□WV□/M9□A(V)L types cannot be mounted.

∗ Since there are other applicable auto switches than listed, refer to page 1398 for details.
∗ For details about auto switches with pre-wired connector, refer to pages 1784 and 1785.
∗ D-A9□/M9□/M9□W auto switches are shipped together (not assembled). (Only auto switch mounting brackets are assembled before shipped.)

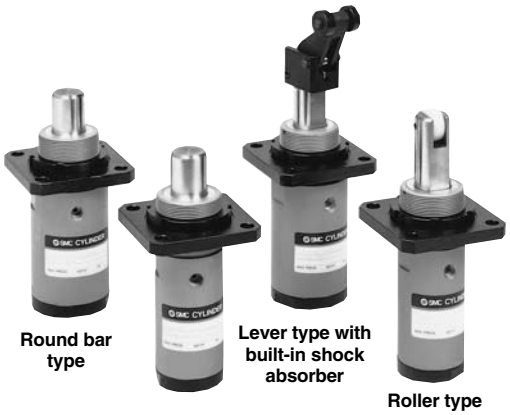

Model

Bore size (mm)		40	50
Mounting	Flange	●	●
Built-in magnet		●	●
Piping	Screw-in type	Rc 1/8	
	Built-in One-touch fittings	ø6/4	ø8/6
Action		Double acting, Single acting (Spring extended), Double acting with spring loaded	
Rod end configuration	Round bar type	●	●
	Chamfered type	●	●
	Roller type	●	●
	Lever type	●	●

Spring Force (Single acting)

(N)

Bore size (mm)	Extended	Compressed
40, **50**	13.7	27.5

∗ For Round bar type, Chamfered type and Roller type.

Specifications

Action	Double acting, Double acting with spring loaded, Single acting (Spring extended)
Fluid	Air
Proof pressure	1.5 MPa
Maximum operating pressure	1.0 MPa
Ambient and fluid temperature	Without auto switch: –10 to 70°C With auto switch: –10 to 60°C
Lubrication	Not required (Non-lube)
Cushion	Rubber bumper
Stroke length tolerance	$^{+1.4}_{0}$
Mounting	Flange style

∗ No freezing (for cylinders with or without an auto switch)

Made to Order Specifications

(For details, refer to pages 1836 and 1872.)

Symbol	Specifications
-XA□	Change of rod end shape
-XC3	Special port position

Bore Size/Standard Stroke

(mm)

Bore size (mm)	Rod end configuration
	Round bar type, Chamfered type, Roller type, Lever type with shock absorber
40	20, 25, 30
50	20, 25, 30

Mass

(kg)

Action	Bore size (mm)	Rod end configuration	Cylinder stroke (mm)		
			20	25	30
Double acting Single acting, Spring extend	**40**	Round bar type, Chamfered type, Roller type	1.14	1.17	1.2
		Lever type with built-in shock absorber	1.38	1.41	1.44
Double acting with spring loaded	**50**	Round bar type, Chamfered type, Roller type	1.34	1.37	1.4
		Lever type with built-in shock absorber	1.56	1.59	1.62

Operating Ranges by Rod End Configuration

(Example 1) For roller type with transfer speed of 15 m/min. and the mass of transferred object of 30 kg.

<How to read the graphs>
To select a cylinder based on the specifications above, find the intersection of the speed of 15 m/min. on the horizontal axis and the mass of 30 kg on the vertical axis in graph (1) below, and select **RSG□40-□□R** that falls in the cylinder operating range.

(Example 2) Transfer speed of 15 m/min., Mass of transferred object of 60 kg, Friction coefficient μ = 0.1, Lever type (Lever type with lock mechanism)

<How to read the graphs>
To select a cylinder based on the specifications above, find the intersection of the speed of 15 m/min. on the horizontal axis and the mass of 60 kg on the vertical axis in graph (3) below, and select **RSG□40-□□D** that falls in the cylinder operating range.

Roller Type/Round Bar Type/ Chamfered Type

Graph (1)

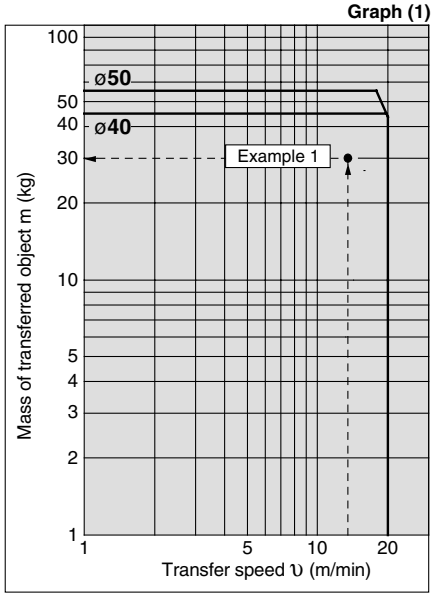

Lever Type (With shock absorber) Friction coefficient μ = 0

Graph (2)

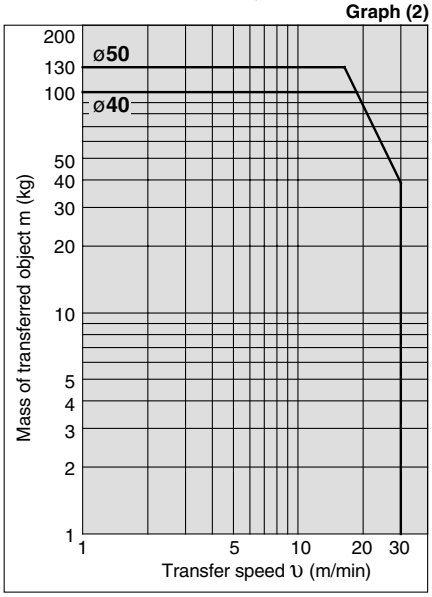

Lever Type (With shock absorber) Friction coefficient μ = 0.1

Graph (3)

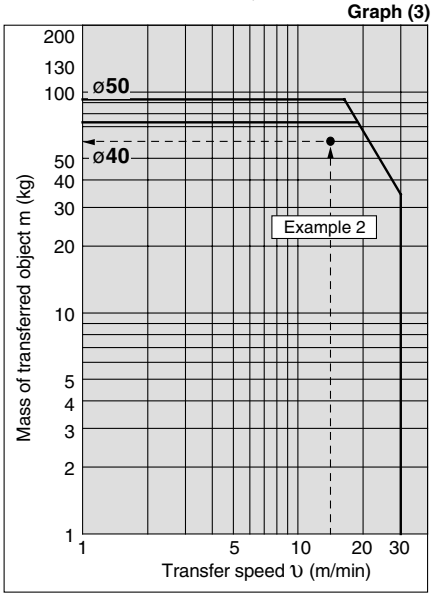

∗ Lever-type mass of transferred object and transfer speed graphs (graphs (2) and (3)) show the values at room temperature (20 to 25°C).
∗ When selecting cylinders, confirm the Specific Product Precautions as well.

Lateral Load and Operating Pressure

The larger the lateral load, the higher the operating pressure required for the stopper cylinder. Set the operating pressure using the graphs as a guide.
(Applicable for round bar, roller and chamfered type rod end configurations.)

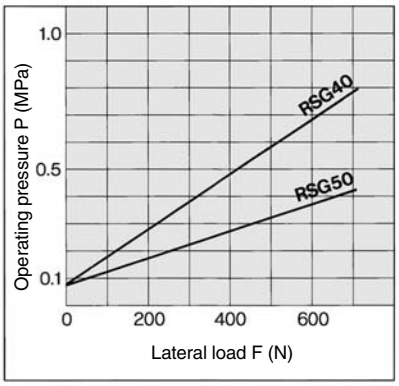

Construction

Roller rod end

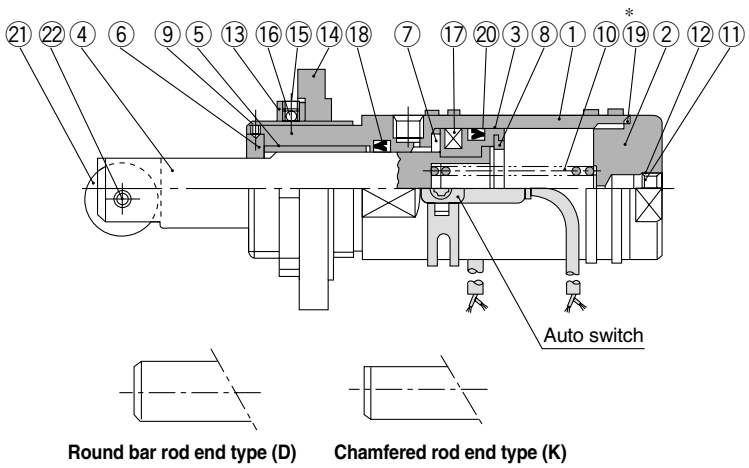

Round bar rod end type (D) Chamfered rod end type (K)

Lever rod end with shock absorber type

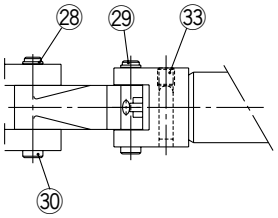

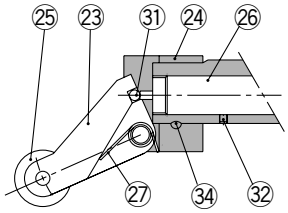

Lever rod end type (With lock mechanism and cancel cap)

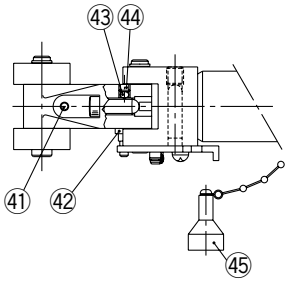

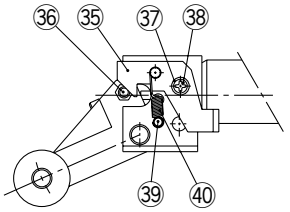

Component Parts

No.	Description	Material	Note
1	**Tube cover**	Aluminum alloy	Hard anodized
2	**Head cover**	Aluminum alloy	Anodized
3	**Piston**	Aluminum alloy	Chromated
4	**Piston rod**	Carbon steel	Hard chrome plated
5	**Bushing**	Copper alloy	
6	**Non-rotating guide**	Rolled steel	Use collar for round bar type.
7	**Bumper A**	Urethane	
8	**Bumper B**	Urethane	
9	**Hexagon socket head set screw**	Chromium molybdenum steel	
10	**Return spring**	Steel wire	Zinc chromated (Except double acting)
11	**Retaining ring**	Carbon tool steel	(Single acting only)
12	**Element**	Sintered matallic BC	(Single acting only)
13	**Lock nut**	Carbon steel	
14	**Flange**	Cast iron	
15	**Hexagon socket head set screw**	Chromium molybdenum steel	
16	**Ball**	Resin	
17	**Magnet**	—	
18	**Rod seal**	NBR	
*19	**Gasket**	NBR	Used Only for double acting and double acting with spring loaded.
20	**Piston seal**	NBR	

Replacement Parts/Seal Kit

Bore size (mm)	Kit no.			Contents
	Double acting	Double acting with spring loaded	Single acting	
40	RSG40D-PS	RSG40B-PS	RSG40T-PS	Set of above nos. ⑱, ⑲, ⑳
50	RSG50D-PS	RSG50B-PS	RSG50T-PS	

∗ Seal kit includes ⑱, ⑲, ⑳. Order the seal kit, based on each bore size.
∗ Since the seal kit does not include a grease pack, order it separately.
Grease pack part no.: GR-S-010 (10 g)

Component Parts (For single acting)

No.	Description	Material	Note
Roller type			
21	**Roller A**	Resin	
22	**Spring pin**	Carbon tool steel	
Lever type			
23	**Lever**	Cast iron	
24	**Lever holder**	Rolled steel	
25	**Roller B**	Resin	
26	**Shock absorber**	—	RB1407-X552
27	**Lever spring**	Stainless steel wire	
28	**Type C retaining ring for shaft**	Carbon tool steel	
29	**Lever pin**	Carbon steel	
30	**Roller pin**	Carbon steel	
31	**Steel balls**	High carbon chrome bearing steel	
32	**Hexagon socket head set screw**	Chromium molybdenum steel	
33	**Hexagon socket head set screw**	Chromium molybdenum steel	
34	**One-side tapered pin**	Carbon steel	
With lock mechanism			
35	**Bracket**	Carbon steel	
36	**Pin B**	Carbon steel	
37	**Spacer**	Carbon steel	
38	**Round head Phillips screw**	Rolled steel	
39	**Pin A**	Rolled steel	
40	**Bracket spring**	Steel wire	
41	**Hexagon socket head cap set screw**	Chromium molybdenum steel	
42	**Spring washer**	Steel wire	
43	**Urethane ball**	Urethane	
44	**Hexagon socket head cap set screw**	Chromium molybdenum steel	
With cancel cap			
45	**Cancel cap**	Aluminum alloy	

Replacement Parts: Shock Absorber

Bore size (mm)	Kit no.
40, 50	RB1407-X552

Rod End Configuration: Round Bar Type

Basic style: Flange mounting

These 2 figures show the piston rod extended.

Bore size: ø40, ø50 **RS□G□-□□**

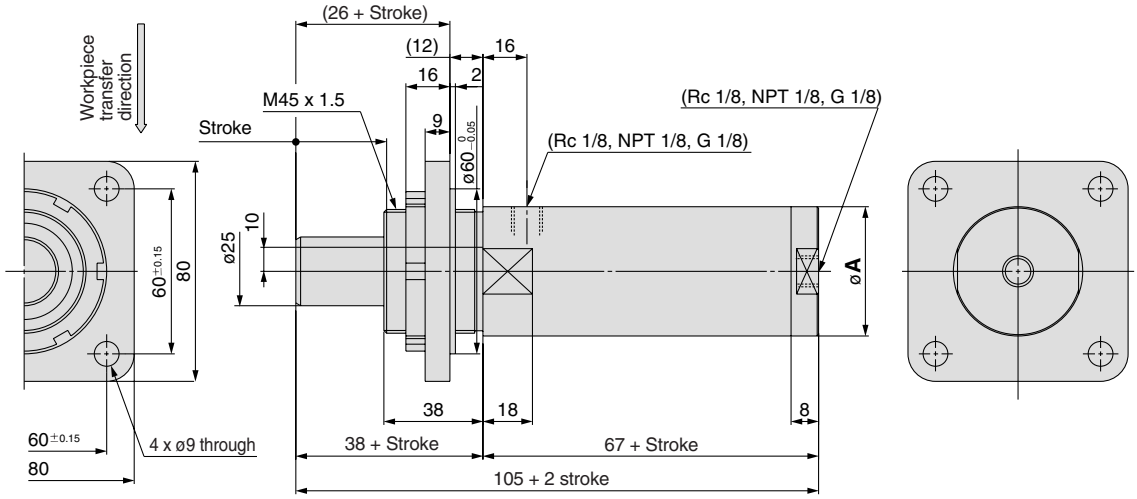

Built-in One-touch fittings

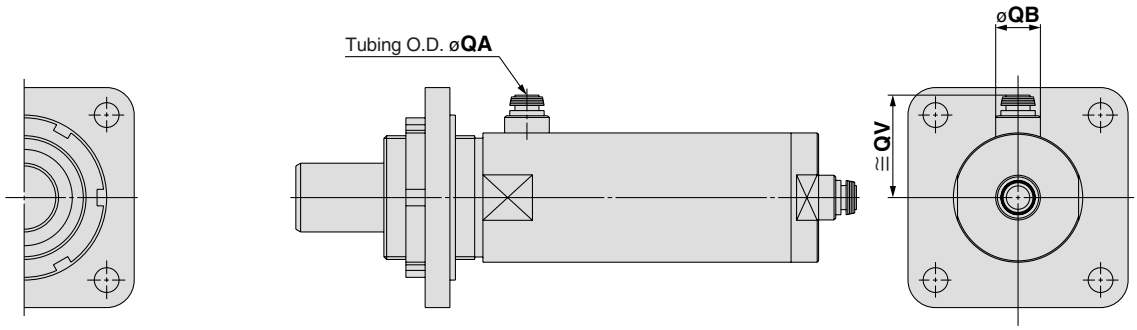

(mm)

Bore size (mm)	A	QA	QB	QV
40	47	6	13	33
50	58	8	16	38.5

Note 1) In the case of single acting type, a One-touch fitting is on the rod side only.
Note 2) These figures show the piston rod extended.
Note 3) For the auto switch mounting position and its mounting height, refer to page 1397.

Rod End Configuration: Chamfered Type (Non-rotating piston rod)

Basic style: Flange mounting

These 2 figures show the piston rod extended.

Bore size: ø40, ø50 **RS□G□-□□K**

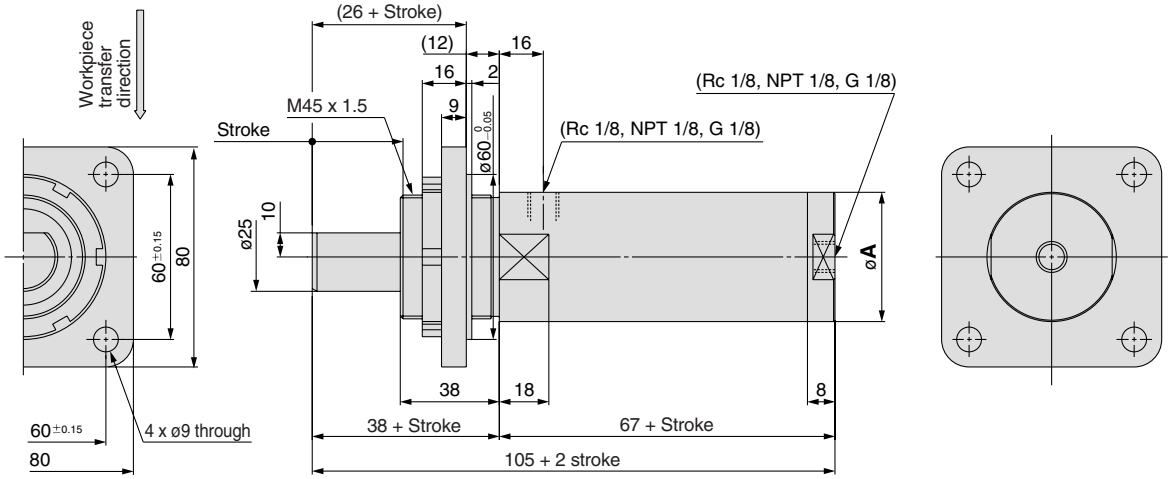

Built-in One-touch fittings

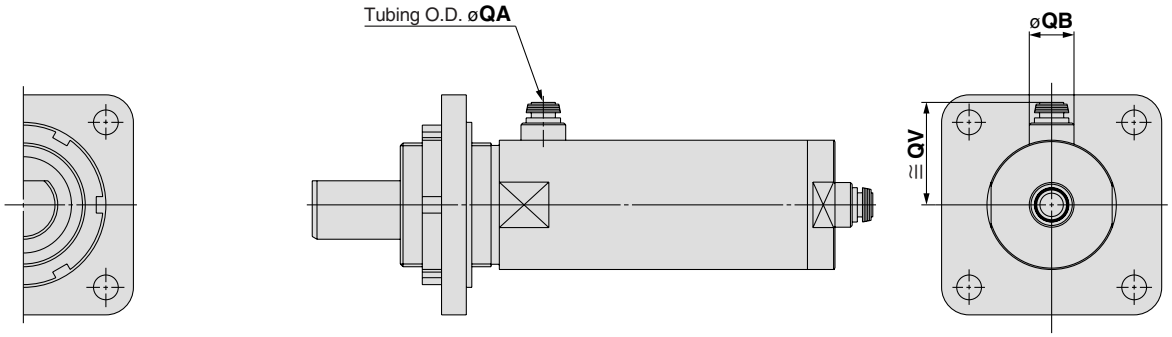

(mm)

Bore size (mm)	A	QA	QB	QV
40	47	6	13	33
50	58	8	16	38.5

Note 1) In the case of single acting type, a One-touch fitting is on the rod side only.
Note 2) These figures show the piston rod extended.
Note 3) For the auto switch mounting position and its mounting height, refer to page 1397.

Rod End Configuration: Roller Type

Basic style: Flange mounting

These 2 figures show the piston rod extended.

Bore size: ø40, ø50 **RS□G□-□□R**

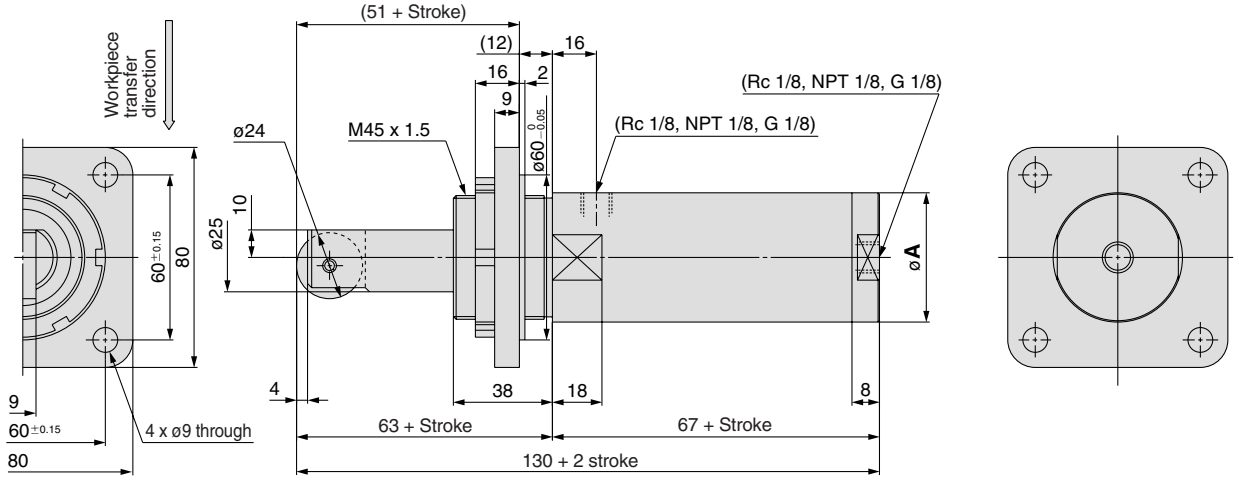

Built-in One-touch fittings

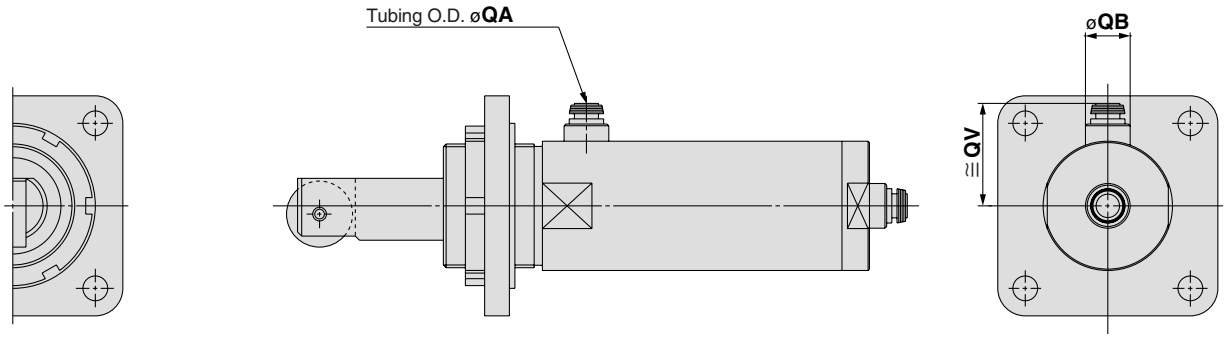

(mm)

Bore size (mm)	A	QA	QB	QV
40	47	6	13	33
50	58	8	16	38.5

Note 1) In the case of single acting type, a One-touch fitting is on the rod side only.
Note 2) These figures show the piston rod extended.
Note 3) For the auto switch mounting position and its mounting height, refer to page 1397.

Rod End Configuration: Lever Type with Shock Absorber

Basic style: Flange mounting

These 2 figures show the piston rod extended.

Bore size: ø40, ø50 **RS□G□-□□L**

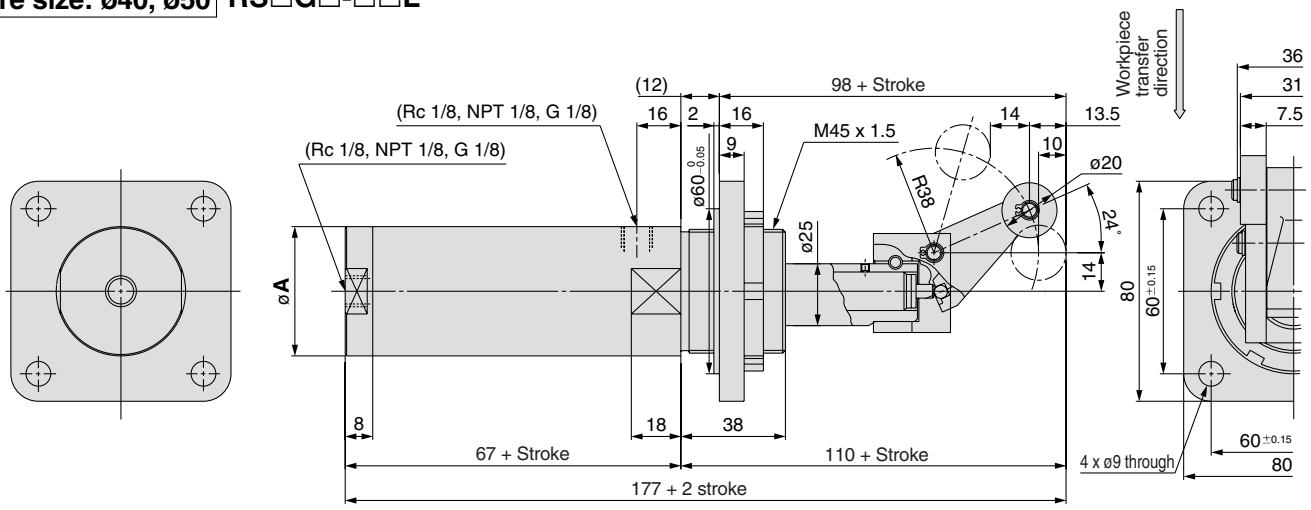

Built-in One-touch fittings

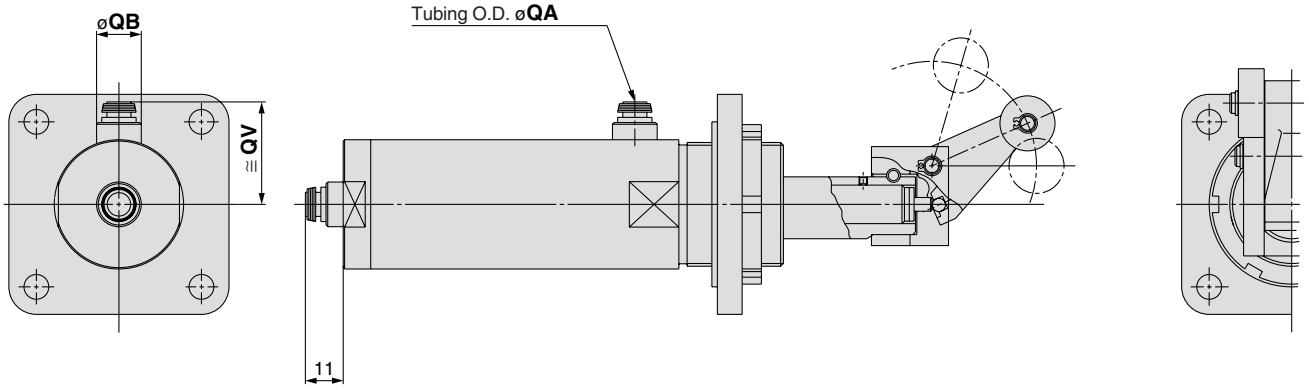

(mm)

Bore size (mm)	A	QA	QB	QV
40	47	6	13	33
50	58	8	16	38.5

Note 1) In the case of single acting type, a One-touch fitting is on the rod side only.
Note 2) These figures show the piston rod extended.
Note 3) For the auto switch mounting position and its mounting height, refer to page 1397.

Rod End Configuration: Lever Type with Shock Absorber

Variable energy absorbing type/Flange mounting style

These 2 figures show the piston rod extended.

Adjustable shock absorber stroke **RS□G□-□□B**

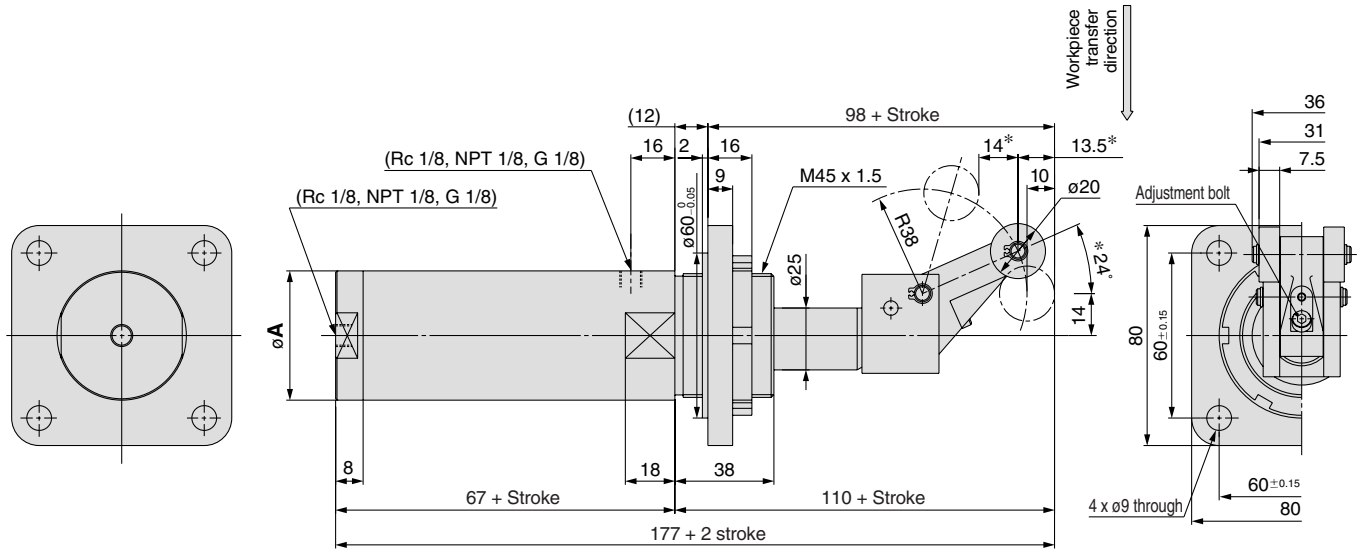

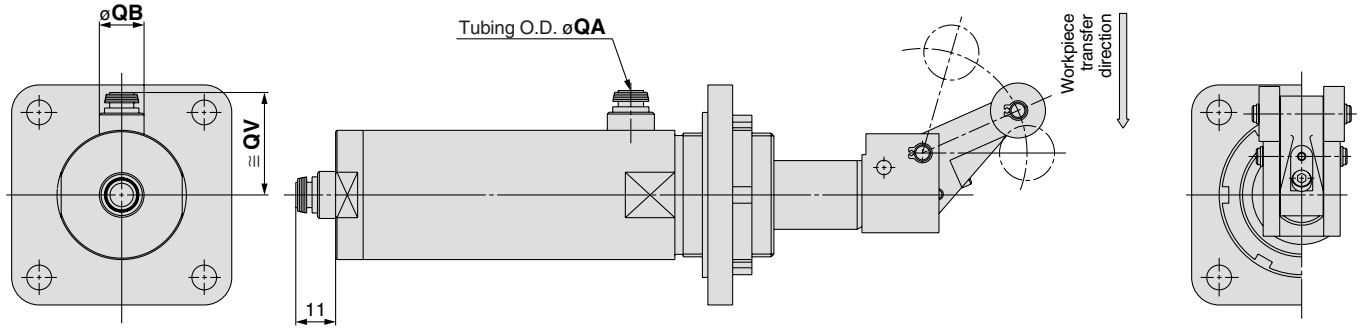

With cancel cap **RS□G□-□□C**

∗ Dimensions when equipped with cancel cap are the same as the drawing above.

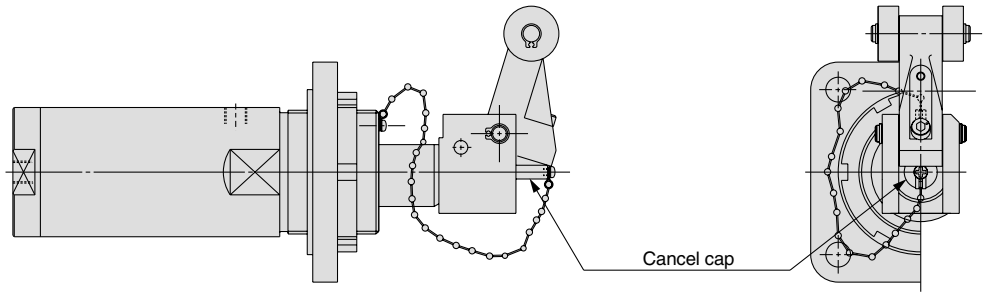

(mm)

Bore size (mm)	A	QA	QB	QV
40	47	6	13	33
50	58	8	16	38.5

Note 1) In the case of single acting type, a One-touch fitting is on the rod side only.
Note 2) These figures show the piston rod extended.
Note 3) For the auto switch mounting position and its mounting height, refer to page 1397.
Note 4) The figure shows these dimensions when the adjustment bolt is lowered (when energy absorption is at its maximum).
However, these dimensions change within the ranges shown below as the adjusting bolt is raised (energy absorption is reduced).
24°* → 16°*, 13.5* → 11.5*, 14* → 16*

Rod End Configuration: Lever Type with Shock Absorber

Variable energy absorbing type/Flange mounting style

These 2 figures show the piston rod extended.

With lock mechanism **RS□G□-□□D**

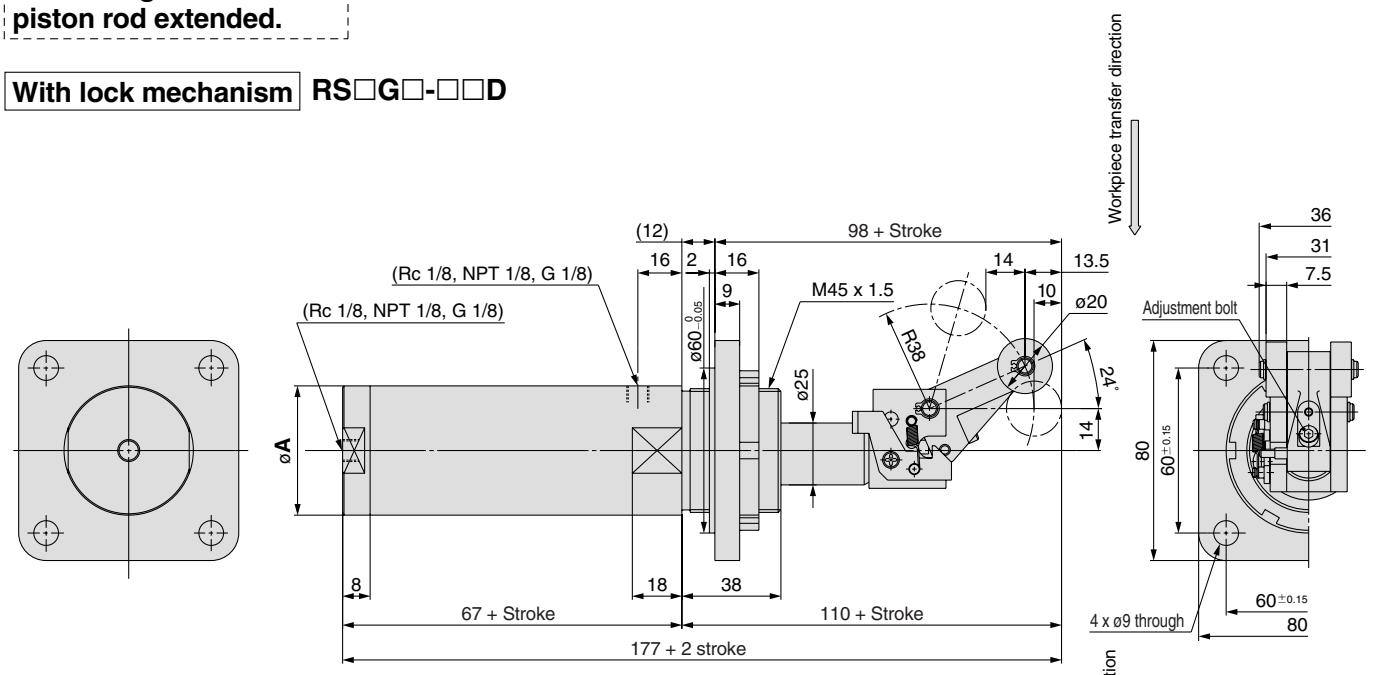

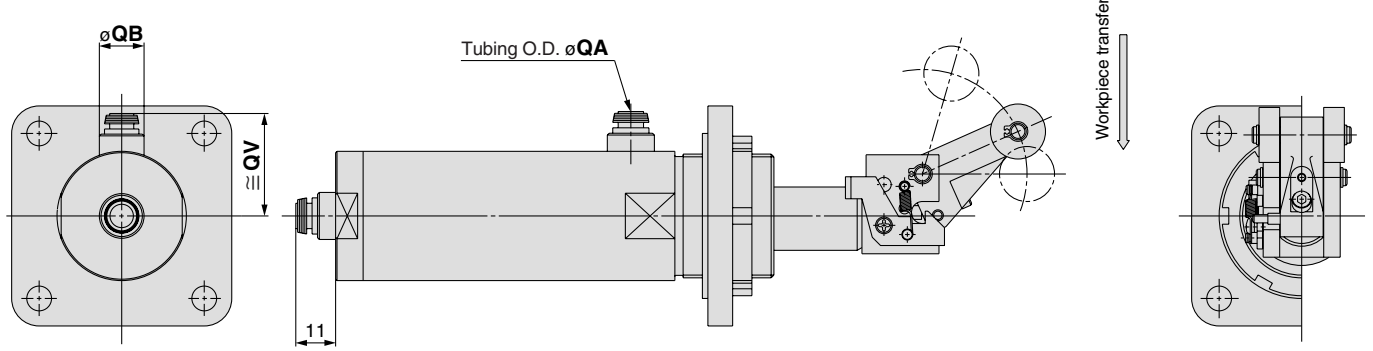

With lock mechanism + Cancel cap **RS□G□-□□E**

∗ Dimensions when equipped with lock and cancel cap are the same as the figure drawing.

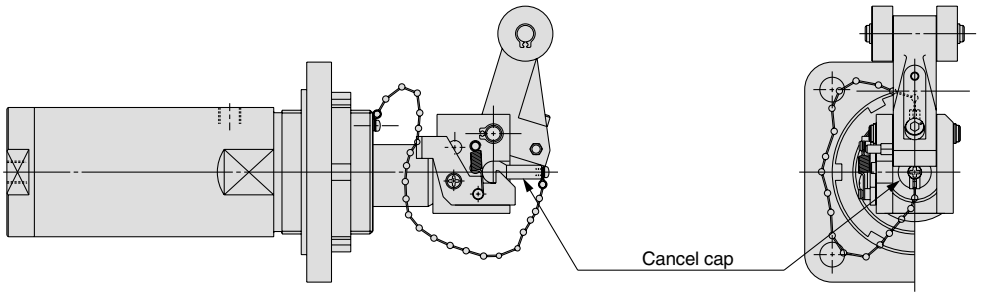

(mm)

Bore size (mm)	A	QA	QB	QV
40	47	6	13	33
50	58	8	16	38.5

Note 1) In the case of single acting type, a One-touch fitting is on the rod side only.
Note 2) These figures show the piston rod extended.
Note 3) The figure shows these dimensions when the adjustment bolt is lowered (when energy absorption is at its maximum).
However, these dimensions change within the ranges shown below as the adjusting bolt is raised (energy absorption is reduced).
24°∗ → 16°∗, 13.5∗ → 11.5∗, 14∗ → 16∗

Auto Switch Proper Mounting Position (Detection at Stroke End) and Its Mounting Height

Reed Auto Switch

D-A9□

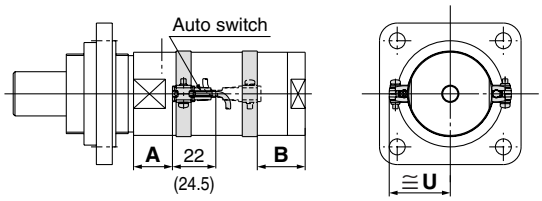

( ): For D-A93 type

D-C7
D-C8

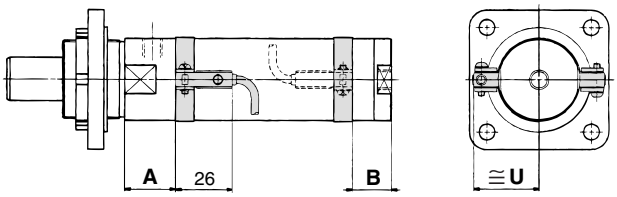

D-C73C
D-C80C

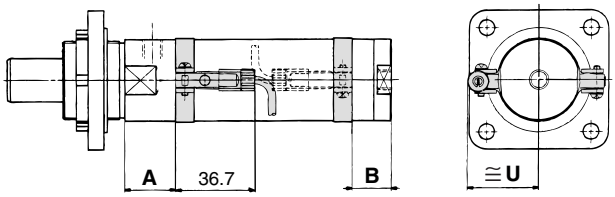

Solid State Auto Switch

D-M9□
D-M9□W

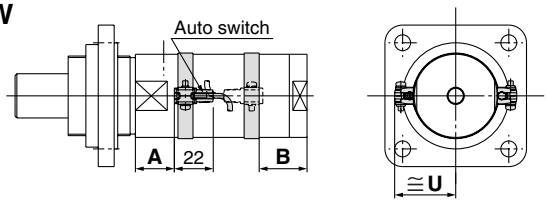

D-H7
D-H7□W
D-H7NF
D-H7BAL

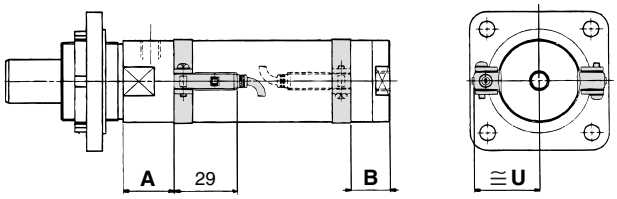

D-H7C

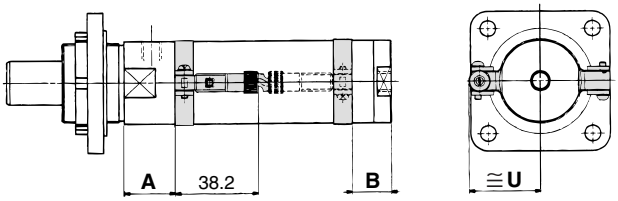

Auto Switch Proper Mounting Position

(mm)

Auto switch model / Bore size (mm)	D-A9□		D-M9□ D-M9□W		D-C7□ D-C80 D-C73C D-C80C		D-H7BAL D-H7□W D-H7 D-H7C		D-H7NF	
	A	B	A	B	A	B	A	B	A	B
40	21.5	25.5	25.5	29.5	22.0	26.0	21.0	25.0	19.5	23.5
50	29.5	17.5	33.5	21.5	30.0	18	29.0	17.0	27.5	15.5

Auto Switch Mounting Height

(mm)

Auto switch model / Bore size (mm)	D-A9□ D-M9□ D-M9□W	D-C7□ D-C80 D-H7 D-H7□W D-H7NF D-H7BAL	D-H7C	D-C73C D-C80C
	U	U	U	U
40	34.5	35.0	38.0	37.5
50	40	40.5	43.5	43.0

Note) Adjust the auto switch after confirming the operating conditions in the actual setting.

Auto switch model	With 2 auto switches	
	Different surfaces	Same surface
	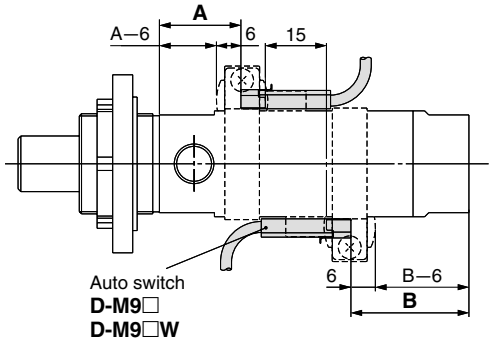 The proper auto switch mounting position is 6 mm inward from the switch holder edge.	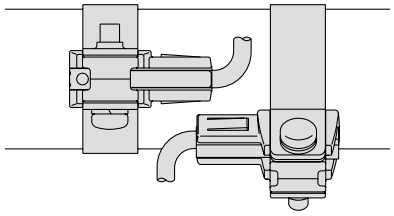 The auto switch is mounted by slightly displacing it in a direction (cylinder tube circumferential exterior) so that the auto switch and lead wire do not interfere with each other.

Note) When two D-A93/M9□/M9□W auto switches are used

Operating Range

Auto switch model	Bore size (mm)	
	40	**50**
D-A9□	8	8
D-M9□ **D-M9□W**	4.5	5
D-C7□/C80 **D-C73C/C80C**	10	10
D-H7□/H7□W **D-H7BAL/H7NF**	5	6
D-H7C	10	9.5

∗ Since this is a guideline including hysteresis, not meant to be guaranteed. (Assuming approximately ±30% dispersion) There may be the case to change substantially depending on an ambient environment.

Auto Switch Mounting Bracket: Part No.

Auto switch model	Bore size (mm)	
	ø40	**ø50**
D-A9□ **D-M9□** **D-M9□W**	Note 1) ①BMA2-040 ②BJ3-1	Note 1) ①BMA2-050 ②BJ3-1
D-C7□/C80 **D-C73C/C80C** **D-H7□** **D-H7□W** **D-H7BAL** **D-H7NF**	BMA2-040	BMA2-050

Note 1) Two kinds of auto switch mounting brackets are used as a set.

[Mounting screw set made of stainless steel]

The following set of mounting screws made of stainless steel is available. Use it in accordance with the operating environment. (Please order the auto switch mounting bracket separately, since it is not included.)

D-H7BAL auto switch is set on the cylinder with the stainless steel screws above when shipped. When an auto switch is shipped independently, BBA4 is attached.

Note 2) Refer to page 1814 for the details of BBA4.

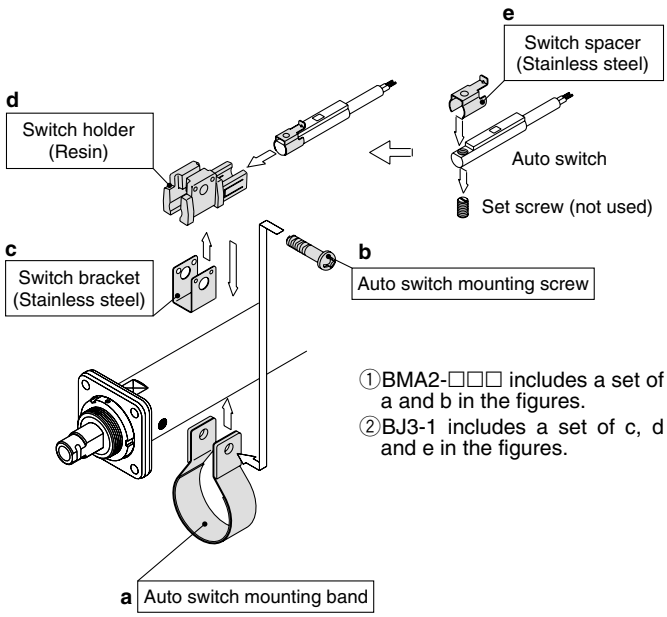

①BMA2-□□□ includes a set of a and b in the figures.
②BJ3-1 includes a set of c, d and e in the figures.

Besides the models listed in How to Order, the following auto switches are applicable.
Refer to pages 1719 to 1827 for detailed specifications.

Auto switch type	Part no.	Electrical entry (Fetching direction)	Features
Reed	D-C73, C76	Grommet (In-let)	—
	D-C80, C80C		Without indicator light
Solid state	D-H7A1, H7A2, H7B		—
	D-H7NW, H7PW, H7BW		Diagnostic indication (2-color)

∗ For solid state auto switches, auto switches with a pre-wired connector are also available. Refer to pages 1784 and 1785 for details.
∗ Normally closed (NC = b contact) solid state auto switches (D-F9G/F9H types) are also available. Refer to page 1746 for details.

Series RSQ/RSG
Specific Product Precautions 1

Be sure to read before handling.
Refer to front matters 42 and 43 for Safety Instructions and pages 3 to 11 for Actuator and Auto Switch Precautions.

Selection

⚠ Danger

1. Use within the range of specifications.
If using beyond the specifications, excessive impacts or vibrations could be applied to the stopper cylinder and might cause breakage.

⚠ Danger

1. Do not allow a pallet to collide with the cylinder when the lever is upright.
In the case of the lever type with built-in shock absorber, if the next pallet runs into the lever when it is in the upright position (after the shock absorber has assimilated energy), the cylinder body will receive the full energy of the impact, and this should not be permitted.

2. Do not apply pressure from the head side of a single acting type cylinder.
If air is supplied from the head side of a single acting cylinder, blow-by of the air will occur.

3. Do not scratch or gouge the sliding portion of a piston.
Quenching of the piston rod has not been performed. If there is a danger of scratching or nicking the piston rod due to sharp edges, etc. on the contact area of a pallet, the pallet should not be used, as this can cause a malfunction.

4. When using a stopper cylinder for intermediate stopping of a load connected directly to a cylinder, etc.
The operating ranges shown in this catalog apply only for stopping of a pallet on a conveyor. When using a stopper cylinder to stop a load connected directly to a cylinder, etc., the cylinder thrust will become a lateral load. In this case, refer to the instruction manual and select a cylinder remaining within the allowable energy and allowable lateral load ranges.

5. For the lever type with a built-in shock absorber (without a lock mechanism), the lever may be pushed back in the opposite direction to the transfer direction due to the return force of the shock absorber, if 10N of thrust or more in the transfer direction is not applied to the lever after the pallet collides with the lever.
If the lever must be continuously upright, select a lever with a lock mechanism.

6. The operating range for the lever type with a built-in shock absorber indicates the range in which the lever is not damaged due to the shock absorber's performance and cylinder rigidity. It is not the same as the range in which the lever can stop softly and fully.
Near the upper limit, collision may occur at the end. If a soft stop is required, sufficient clearance is necessary. Consult with SMC when a reliable soft stop is required near the upper limit.

Mounting

⚠ Caution

1. Do not apply rotational torque to the cylinder rod.
In order to prevent rotational torque from acting upon the cylinder rod, mount it so that the contacting surfaces of the pallet and cylinder are parallel to one another.

When mounting a cylinder, tighten the body lock nut, and then tighten the set screws (2 locations) which are included with the lock nut. (Except RSQ)

2. When the lever type with a built-in shock absorber is installed from the direction of the lever side, mounting holes must be machined in accordance with recommend hole diameters in the table below.
When it is installed from the direction of the lever side of the stopper cylinder as shown below, note that the lever's outer diameter is larger than the rod cover boss diameter.

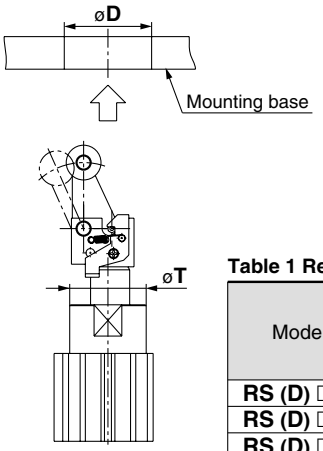

Figure 1

Lever type models

RS (D) □32/40/50-□□L
RS (D) □32/40/50-□□B
RS (D) □32/40/50-□□C
RS (D) □32/40/50-□□D
RS (D) □32/40/50-□□E

Table 1 Recommended hole diameter

Model	Rod cover boss O.D.	Recommended hole diameter for mounting base
	øT	øD
RS (D) □32	36	38
RS (D) □40	44	48
RS (D) □50	56	57

Series RSQ/RSG
Specific Product Precautions 2

Be sure to read before handling.
Refer to front matters 42 and 43 for Safety Instructions and pages 3 to 11 for Actuator and Auto Switch Precautions.

Operation

⚠ Caution

1. In the case of the model with locking mechanism, do not apply an external force from the opposite side when the lever is locked.
When moving pallets during conveyor adjustments, first lower the cylinder.

2. Do not use oil, etc. on the sliding parts of the piston rod.
This can cause trouble with retraction or other malfunctions.

3. Do not get your hands caught during cylinder operation.
Since the lever section moves up and down when the cylinder is in operation, take sufficient care to avoid getting your hands caught between the rod cover and the lever holder.

4. Do not expose the shock absorber to machining oil, water, or dust.
This will cause the shock absorber to become damaged, leading to air leaks.

Maintenance

⚠ Caution

1. After the shock absorber has been replaced, tighten the set screw M3 x 2.5 L securely so that it makes contact with the threaded section of the shock absorber.
Tightening torque: 0.29 N·m

2. When changing the non-rotating direction, loosen the set screws (2 locations) in the cover (tube cover or rod cover), change the detent to the desired position by rotating the non-rotating guide, and then retighten.
After tightening the set screw, confirm that the non-rotating guide and the piston rod does not contact and rise before using.
Tightening torque: 0.63 N·m

3. How to adjust the lever type, variable energy absorbing type
For the lever type, variable energy absorbing type, strokes of the shock absorber can be adjusted with an adjustment bolt included in order to stop in accordance with the transfer conditions.

Follow the procedures below to adjust strokes.

Procedures

1) Loosen the set screw (M4) on the lever side.
2) Adjust the adjustment bolt in accordance to the energy of the transferred object.
(The stroke of the shock absorber becomes larger (absorbing energy becomes bigger) when tightening the adjustment bolt, while it becomes smaller when loosening the bolt.)
3) After adjusting the adjustment bolt, fix the bolt with the set screw (M4) loosened in 1).
Tightening torque M4: 1.5 N·m

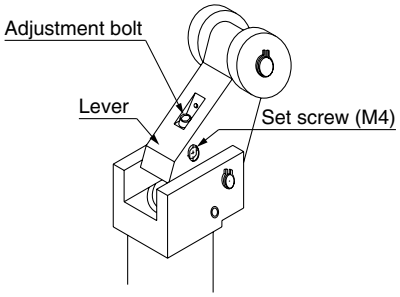

Stopper Cylinder
Series RSA
ø50, ø63, ø80

Stops pallets gently.
Stopper cylinder with built-in shock absorber.



Energy absorption can be adjusted to accommodate varying loads

Transferred articles are gently stopped with a built-in adjustable shock absorber.

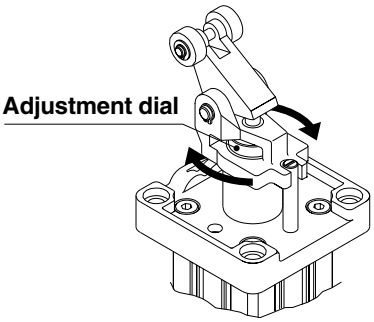

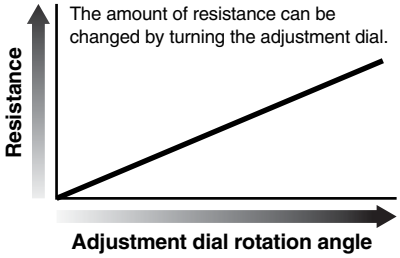

Stopper direction can be changed within 90°

The stopper lever can be rotated 90°.

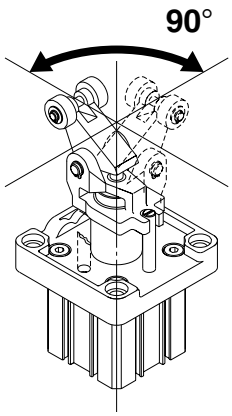

Series Variations

Series	Mounting	Action	Rod end configuration		Standard variations	Option		Bore size (mm)	Standard stroke	
					Built-in magnet	With lock	With cancel		30	40
RSA	Flange style	Double acting	Lever type	Adjustable	●	●	●	50	●	●
		Double acting with spring			●	●	●	63	●	●
		Single acting			●	●	●	80	●	●

Option

■ **With lock mechanism**

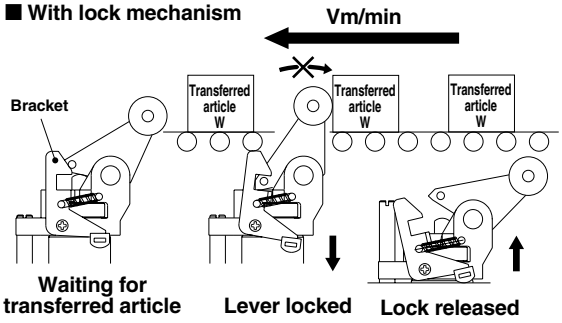

A repulsion preventing mechanism keeps light pallets, etc., from being pushed back by the reactive force of the shock absorber's spring.

■ **With cancel cap**

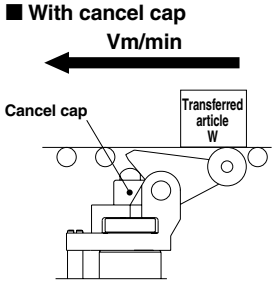

The lever is set to a pallet pass position allowing some pallets to pass by.

Heavy duty rod

Bore size (mm)	Rod dia. (mm)
50	32
63	40
80	50

Three types of action

1. Single acting
2. Double acting
3. Double acting with spring

Auto switch capable

Mounting is possible with no protrusion from the body surface.

Two types of roller material can be selected to accommodate the application

(Resin, Rolled steel)

Stopper Cylinder

Series RSA

ø50, ø63, ø80

How to Order

RSA **50** — **30** **D** **L** — [ ] — **Z73** [ ]

Bore size

50	50mm
63	63mm
80	80mm

Cylinder stroke

50, 63	30mm
80	40mm

Action

D	Double acting
B	Double acting with spring
T	Single acting, Spring extend

Roller material

L	Resin
M	Rolled steel

Option ∗1

Nil	Without option
D	With lock mechanism
C	With cancel cap

∗ 1 Options can be combined. However, indicate in the order of D C.

Auto switch

Nil	Without auto switch (Built-in magnet)

∗ For the applicable auto switch model, refer to the table below.

Number of auto switches

Nil	2 pcs.
S	1 pc.

Applicable Auto Switch/Refer to page 10-20-1 for further information on auto switches.

Type	Special function	Electrical entry	Indicator light	Wiring (Output)	Load voltage			Auto switch model		Lead wire length* (m)			Applicable load	
					DC		AC	Electrical entry direction		0.5 (Nil)	3 (L)	5 (Z)		
								Perpendicular	In-line					
Reed switch	—	Grommet	Yes	3-wire	—	5V	—	—	**Z76**	●	●	—	IC circuit	—
			No	2-wire	24V	12V	100V	—	**Z73**	●	●	●	—	Relay, PLC
						5V, 12V	100V or less	—	**Z80**	●	●	—	IC circuit	
Solid state switch	—	Grommet	Yes	3-wire (NPN)	24V	5V	—	**Y69A**	**Y59A**	●	●	○	IC circuit	Relay, PLC
				3-wire (PNP)		12V		**Y7PV**	**Y7P**	●	●	○		
				2-wire		12V		**Y69B**	**Y59B**	●	●	○	—	
	Diagnostic indication (2 color indication)			3-wire (NPN)		5V		**Y7NWV**	**Y7NW**	●	●	○	IC circuit	
				3-wire (PNP)		12V		**Y7PWV**	**Y7PW**	●	●	○		
				2-wire		12V		**Y7BWV**	**Y7BW**	●	●	○	—	
	Water resistant (2 color indication)							—	**Y7BA**	—	●	○		

∗ Lead wire length symbols: 0.5 m ····· Nil (Example) Y69B
3 m ····· L (Example) Y69BL
5 m ····· Z (Example) Y69BZ

∗∗ Solid state switches marked with a "○" symbol are produced upon receipt of order.
∗∗∗ Types D-A7□, D-A8□, D-F7□ and D-J7□ can be mounted with options.

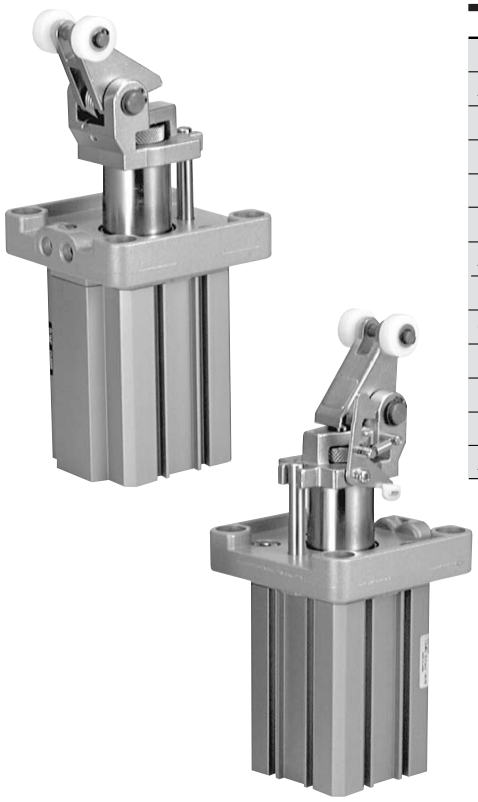

Specifications

Bore size (mm)	50	63	80
Action	Double acting, Single acting spring extend, Double acting with spring		
Rod end configuration	Lever type with built-in shock absorber		
Fluid	Air		
Proof pressure	1.5MPa		
Maximum operating pressure	1.0MPa		
Ambient and fluid temperature	–10 to 60°C (with no freezing)		
Lubrication	Not required (non-lube)		
Cushion	Rubber bumper		
Stroke length tolerance	$^{+1.4}_{0}$		
Mounting	Flange		
Port size	Rc 1/8	Rc 1/4	Rc 1/4
Auto switch	Mountable		

Operating Range

(Example) Load weight 300kg, Transfer speed 20m/min, Coefficient of friction μ = 0.1

(Viewing the graphs)

From Graph (2), find the intersection of load weight 300kg on the vertical axis and transfer speed 20m/min. on the horizontal axis. Select bore size ø63 from within the cylinder operating range.

Graph (1)

Bore size ø50, ø63, ø80/μ = 0

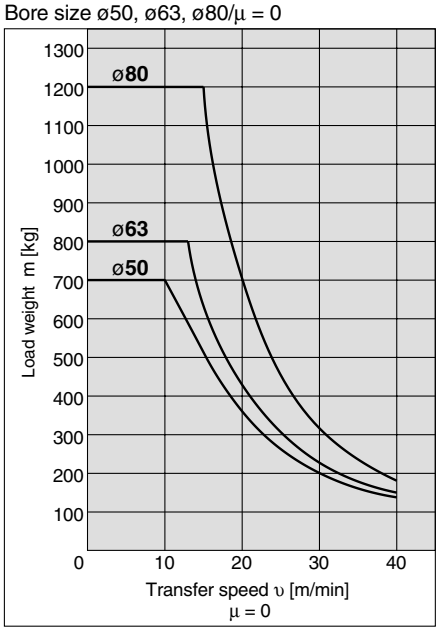

Graph (2)

Bore size ø50, ø63, ø80/μ = 0.1

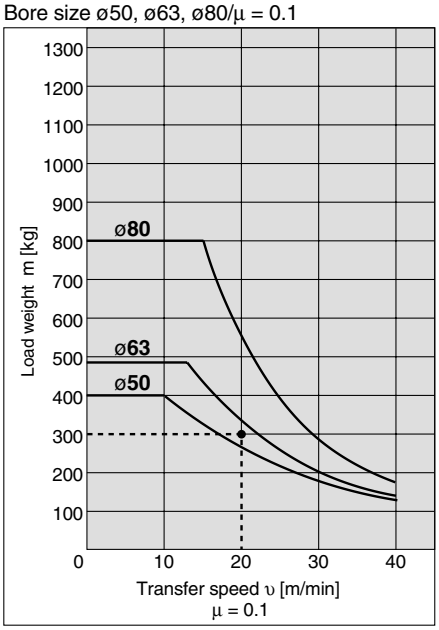

Lateral Load and Operating Pressure

The larger the lateral load, the higher the pressure required to operate the stopper cylinder. Set the operating pressure using the graph below as a guide.

RSA50, 63, 80

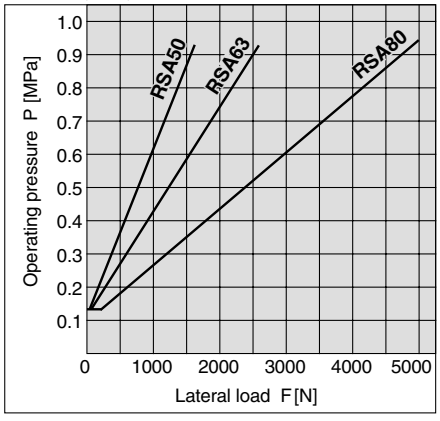

Dimensions

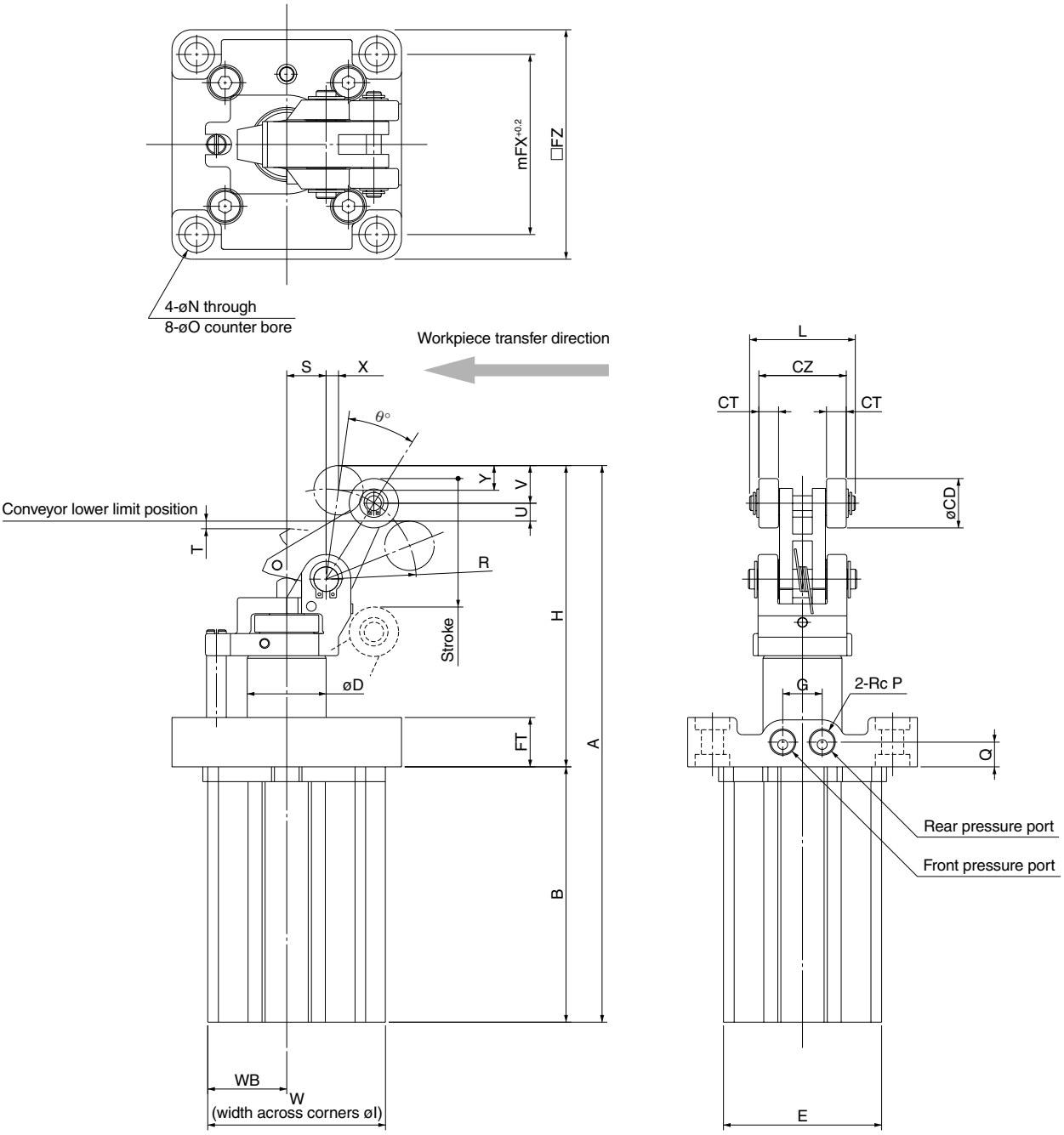

(mm)

Bore size (mm)	Stroke	A	B	CD	CT	CZ	D	E	FT	FX	FZ	G	H	I	L	N	O	P	Q	R
50	30	225.5	103.5	20	8	35.5	32	64	20	73	93	16	122	85	44	9	14 depth 5	1/8	10	36
63	30	246	106	20	10	44.5	40	77	25	90	114	24	140	103	53	11	18 depth 6	1/4	12.5	43
80	40	299.5	135	25	10	44.5	50	98	25	110	138	28	164.5	132	54	13	20 depth 6	1/4	12.5	49

Bore size (mm)	S	T	U	V	W	WB	X	Y	θ°
50	16	3.1	7.2	15.5	72	32	5	10	24°
63	18.5	3	8.8	16	87.5	38.5	5	10	24.5°
80	21	3.7	9	19	109	49	5	12.5	24.5°

Heavy Duty Stopper Cylinder

Series RSH ø20, ø32

Series RS1H ø50, ø63, ø80

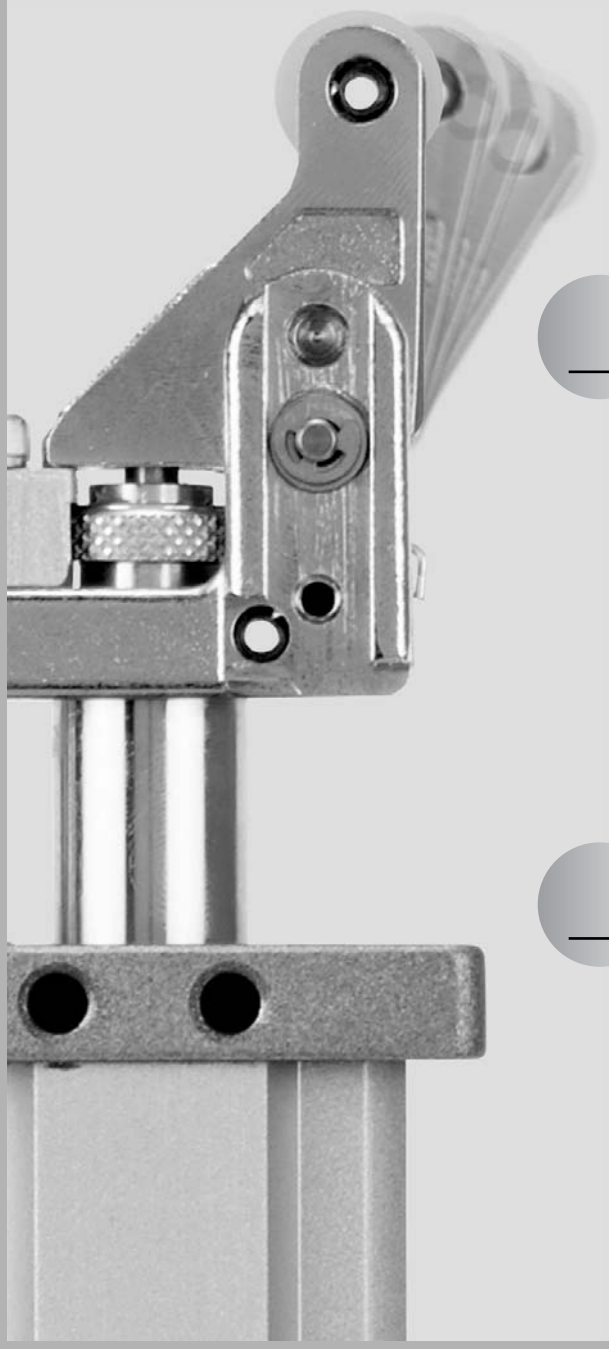

To stop pallets gently

Stopper cylinder with built-in shock absorber

Amount of energy absorption can be adjusted to suit the load.

Stops the work piece gently with adjustable built-in shock absorber (ø50 to ø80).

The retardation value can be changed by rotating the adjustment dial.

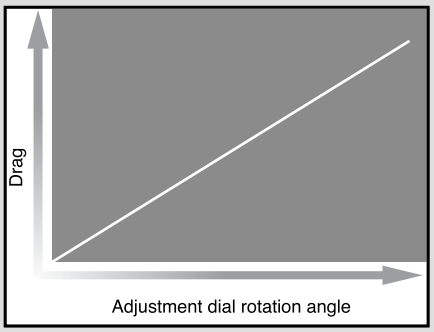

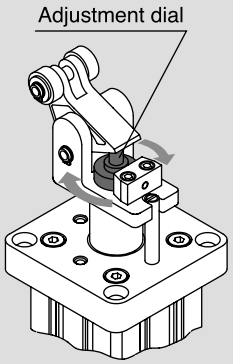

Easy replacement of shock absorbers

Easy maintenance is possible with a shock absorber that can be removed simply by loosening the bolts and shock absorber fixing screw from the stopper.

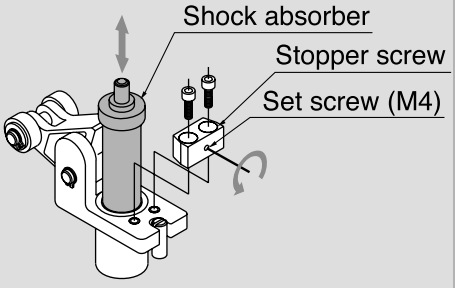

Series Variations

Series	Bore size (mm)	Standard stroke (mm)	Mounting type	Actuation system	Rod end shape	Standard variations	Option		
		15 20 30 40				Built-in magnet	With lock mechanism	With cancel	With proximity sensor
RSH	20, 32	● ● ● ●	Flange	Double acting; Double acting spring type; Single acting retraction type	Lever; Adjustable	●	●	●	●
RS1H	50, 63, 80	● ● ● ●	Flange	Double acting; Double acting spring type; Single acting retraction type	Lever; Adjustable	●	●	●	●

RSQ
RSG
RS□
MI□
D-□
-X□
Individual -X□

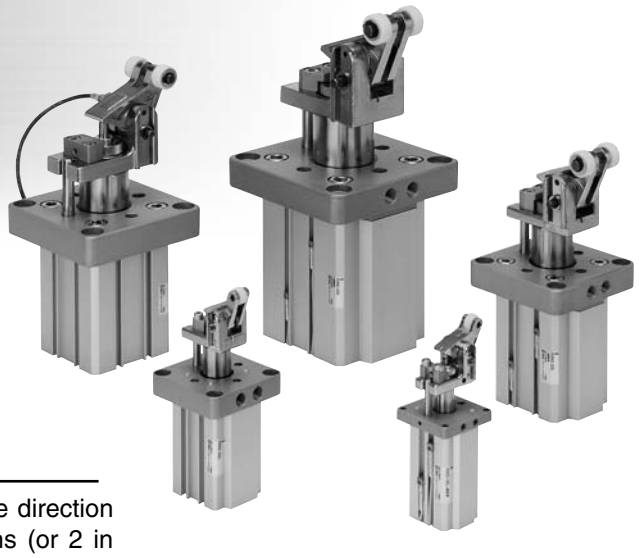

The roller lever direction can be changed in 90° steps.

To adapt the roller lever of the stopper to the work piece direction the roller lever can be positioned in 4 different directions (or 2 in case ø20) in 90° steps around the piston rod (with ø50 to ø80 the direction of the roller lever is selected in the part number).

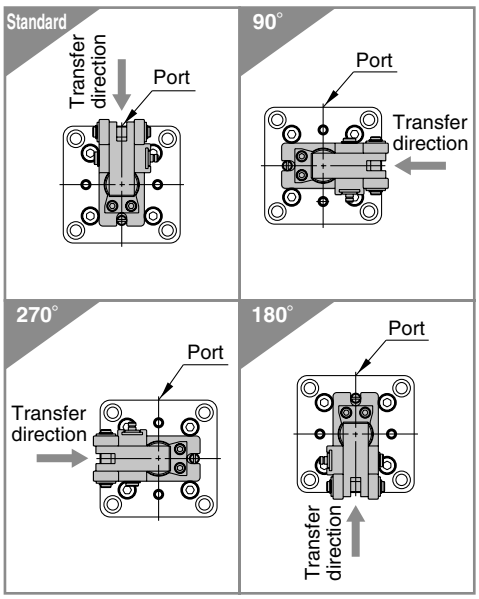

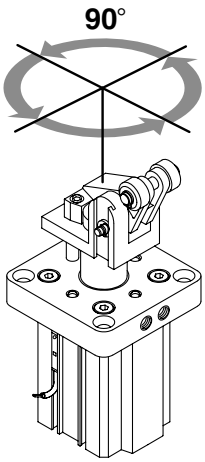

Piping is available from 2 directions.

∗With ø50 to ø80, the direction of the roller lever is selected in the part number.

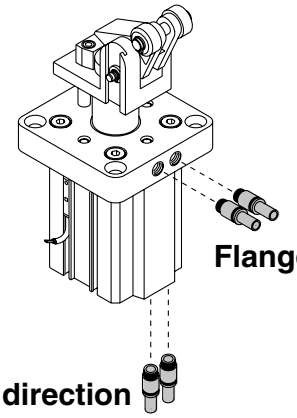

Option

With lock mechanism

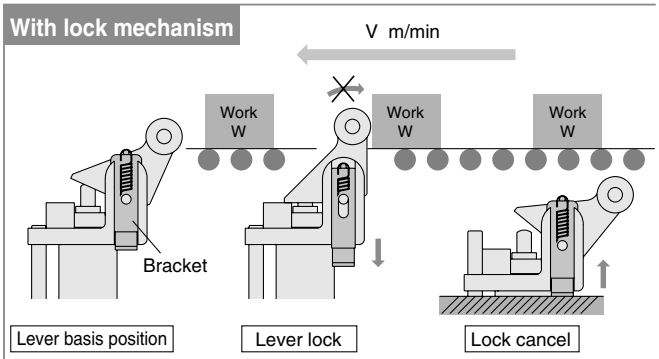

Even in the case of a light pallet, the locking mechanism prevents the pallet from rebounding due to spring.

With cancel cap

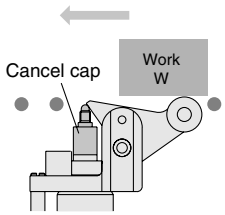

The cancel cap holds the lever horizontally allowing a pallet to pass.

With lever detection switch

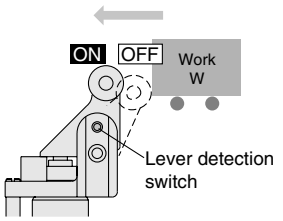

When the lever stands erect (when the energy is absorbed), the switch turns on a signal that determines the pallet has reached the stop position. (For more information, please refer to page 1412.)

● High power rod

Bore size (mm)	20	32	50	63	80
Rod size (mm)	14	20	32	40	50

● 3 types of operation

1. **Single acting**
2. **Double acting**
3. **With double acting spring**

● Auto switch mounting available

Auto switches can be mounted without protruding from the body surface.

● 2 types of roller materials are available depending on the application. (Resin, Carbon steel)

Series RSH/RS1H
Model Selection

Operating Range

(Example) Load mass 300 kg, Transfer speed 20 m/min, Friction coefficient μ = 0.1

(How to read graph)
In graph [2], find the intersection of the vertical axis representing the mass of 300 kg and the horizontal axis representing the speed of 20 m/min. And select the bore size ø63 positioned within the operating range of the cylinder.

Graph ①

Bore size ø50, ø63, ø80/μ = 0

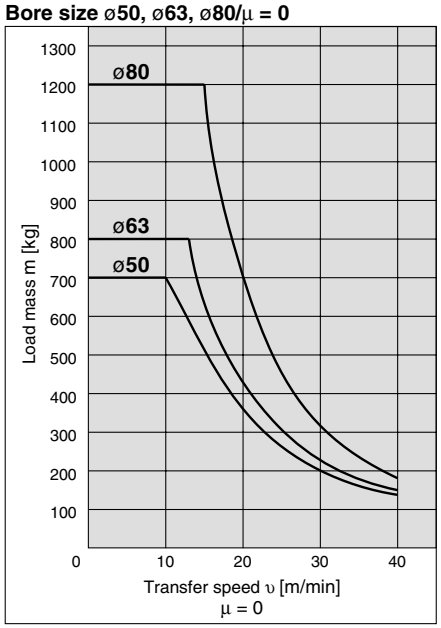

Graph ②

Bore size ø50, ø63, ø80/μ = 0.1

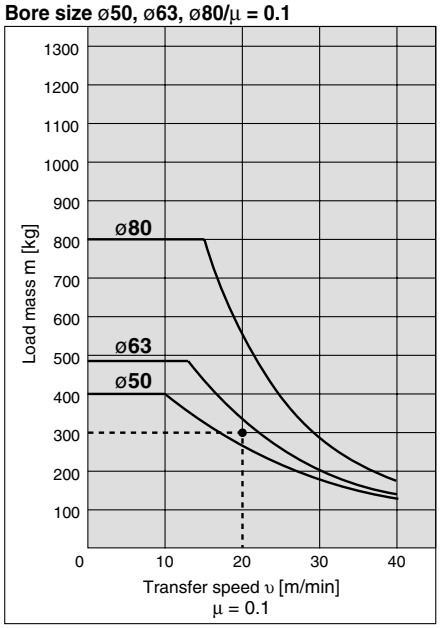

Graph ③

Bore size ø20, ø32/μ = 0

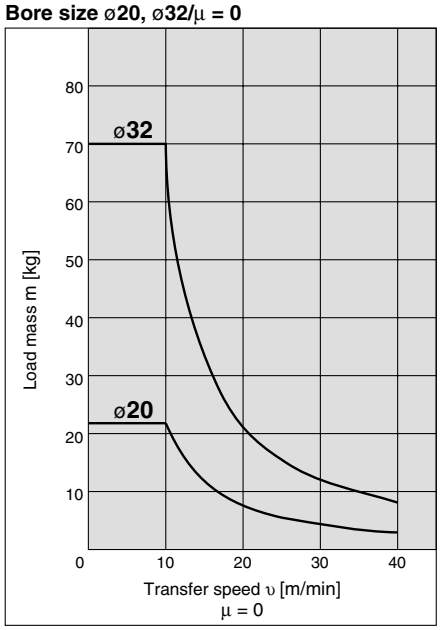

Graph ④

Bore size ø20, ø32/μ = 0.1

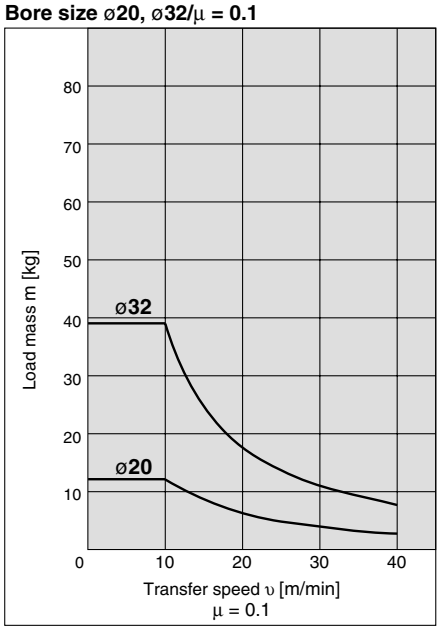

*The graphs for the load mass and transfer speed show the values measured at room temperature (20 to 25°C).

Lateral Load and Operating Pressure

The greater lateral load needs higher cylinder operating pressure. Set the operating pressure by using the graph as a guideline.

RSH20, 32

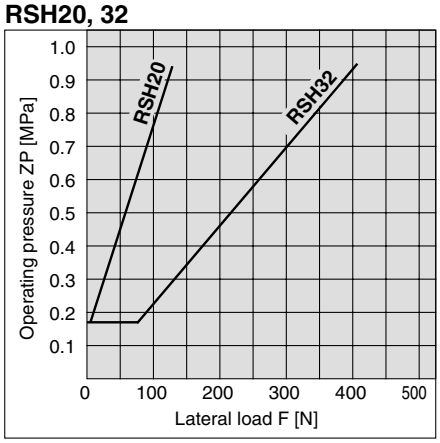

RS1H50, 63, 80

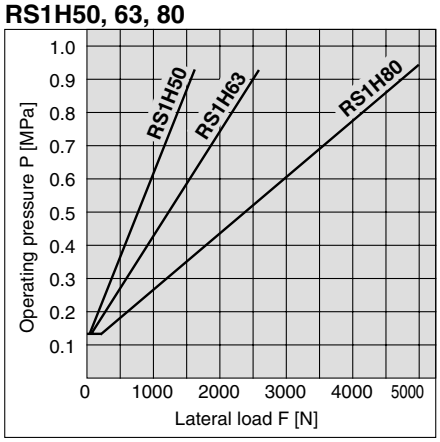

Heavy Duty Stopper Cylinder
Series RSH/RS1H
ø20, ø32 ø50, ø63, ø80

How to Order

Heavy Duty Stopper Cylinder ø20, ø32 — **RSH 32 □ □ – 20 D L – □ □ – M9W □**

Heavy Duty Stopper Cylinder ø50, ø63, ø80 — **RS1H 50 □ □ – 30 D L – □ □ – M9W □**

Bore size

20	20 mm
32	32 mm

Piping direction

Nil	Flange side 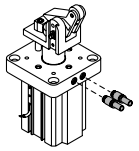

Cylinder stroke

15	15 mm (RSH20)
20	20 mm (RSH32)

Positional relationship of lever and port

Nil	RSH20 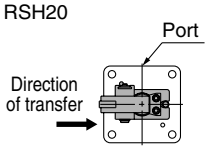
	RSH32 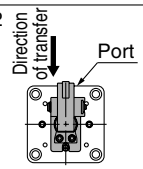

Bore size

50	50 mm
63	63 mm
80	80 mm

Port thread type

Nil	M*
	Rc
TN	NPT
TF	G

*The tube I.D. of 20 is only available to port size M screws.

Piping direction

Nil	Flange side 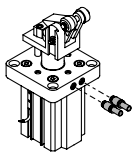
A	Axial direction (tube) 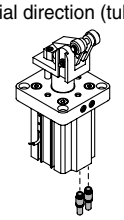

Cylinder stroke

30	30 mm (RS1H50, 63)
40	40 mm (RS1H80)

Action

D	Double acting type
B	Double acting spring type
T	Single acting/Spring extended

Roller material

L	Resin
M	Carbon steel

Option Note 1)

Nil	Without option
D	With lock mechanism
C	With cancel cap
S Note 2)	With lever detection switch

Note 1) Options can be combined. Indicate the part No. according to the priority order of D.C.S.

Note 2) **Lever detection switch type**

Type	Applicable model
E2E-X1C1	RSH 20, 30
E2E-X2D1-N	RS1H 50, 63, 80

Number of auto switches
(auto switch number mounted)

Nil	2 pcs.
S	1 pc.

Auto switch

Nil	Without auto switch (Built-in magnet)

*Refer to page 1405 for auto switch model numbers.

Positional relationship of lever and port

Nil	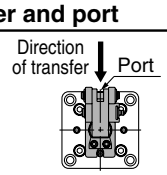
P	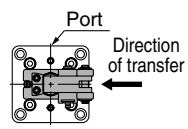
Q	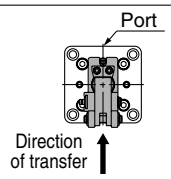
R	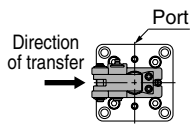

Applicable auto switches/Refer to pages 1719 to 1827 for detailed auto switch specifications.

Type	Special function	Electrical entry	Indicator light	Wiring (output)	Load voltage DC		Load voltage AC	Auto switch models Perpendicular	Auto switch models In-line	Lead wire length (m) 0.5 (Nil)	1 (M)	3 (L)	5 (Z)	Pre-wired connector	Applicable load	
Solid state switch	—	Grommet	Yes	3-wire (NPN)	24 V	5 V, 12 V	—	**M9NV**	**M9N**	●	●	●	○	○	IC circuit	Relay, PLC
				3-wire (PNP)				**M9PV**	**M9P**	●	●	●	○	○	IC circuit	
				2-wire		12 V		**M9BV**	**M9B**	●	●	●	○	○	—	
	Diagnostic indication (2-color display)			3-wire (NPN)		5 V, 12 V		**M9NWV**	**M9NW**	●	●	●	○	○	IC circuit	
				3-wire (PNP)				**M9PWV**	**M9PW**	●	●	●	○	○	IC circuit	
				2-wire		12 V		**M9BWV**	**M9BW**	●	●	●	○	○	—	
	Water resistance (2-color display)			3-wire (NPN)		5 V, 12 V		**M9NAV**	**M9NA**	○	●	●	○	○	IC circuit	
				3-wire (PNP)				**M9PAV**	**M9PA**	○	●	●	○	○	IC circuit	
				2-wire		12 V		**M9BAV**	**M9BA**	○	●	●	○	○	—	
Reed switch	—	Grommet	Yes	3-wire (NPN equiv)	—	5 V	—	—	**Z76**	●	—	●	—	—	IC circuit	—
			No	2-wire	24 V	12 V	100 V	—	**Z73**	●	—	●	—	—	—	Relay, PLC
							100 V or less	—	**Z80**	●	—	●	—	—	—	

∗ Lead wire length symbols: 0.5 m ····· Nil (Example) M9NW
1 m ····· M (Example) M9NWM
3 m ····· L (Example) M9NWL
5 m ····· Z (Example) M9NWZ

∗ Solid state auto switches marked with a "○" symbol are produced upon receipt of order.
∗ D-A9□/A9□V types cannot be mounted.

∗ Refer to page 1411 since there are applicable auto switches other than listed.
∗ Refer to pages 1784 and 1785 for the details of auto switches with a pre-wired connector.
∗ Auto switches are shipped together (not assembled).



RSH

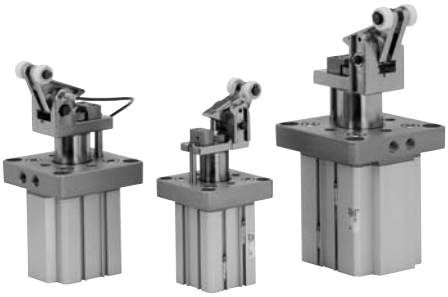

RS1H

Specifications

Model	RSH		RS1H		
Bore size (mm)	**20**	**32**	**50**	**63**	**80**
Action	Double acting, Double acting spring, Single acting (Spring extended)				
Style of rod end	Lever with built-in shock absorber type				
Fluid	Air				
Proof pressure	1.5 MPa				
Max. operating pressure	1.0 MPa				
Ambient and fluid temperature	−10 to 60°C (No freezing)				
Lubrication	Not required (non-lube)				
Cushion	Rubber bumper				
Stroke length tolerance	$+^{1.4}_{0}$				
Mounting	Flange				
Port size Rc, NPT, G	M5 x 0.8	1/8	1/8	1/4	1/4
	—	1/8	1/8	1/4	1/4
	—	1/8	1/8	1/4	1/4

Bore size, Standard strokes

(mm)

Model	Bore size (mm)	Standard stroke
RSH	**20**	15
	32	20
RS1H	**50**	30
	63	30
	80	40

Mass

(kg)

Action	Rod end configuration	Bore size (mm)	Mass
Double acting type Double acting spring type Single acting spring extended	Lever with built-in shock absorber type	**20**	0.41
		32	0.75
		50	2.03
		63	3.56
		80	6.33

Construction

ø20, ø32

Double acting (DL, DM)

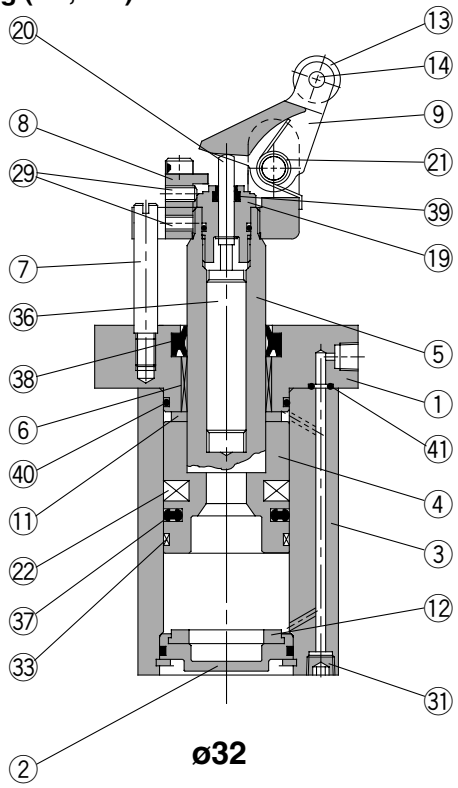

ø32

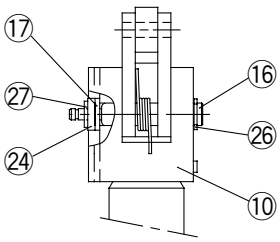

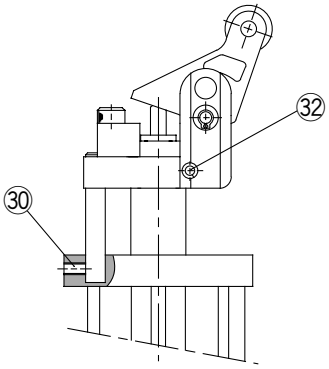

ø20

Double acting spring type (BL, BM)

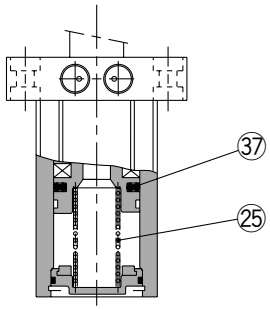

Single acting (TL, TM)

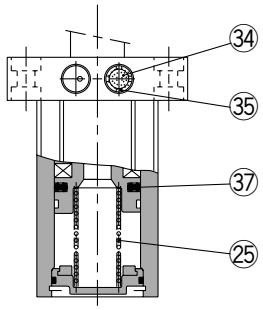

ø50, ø63, ø80

Double acting (DL, DM)

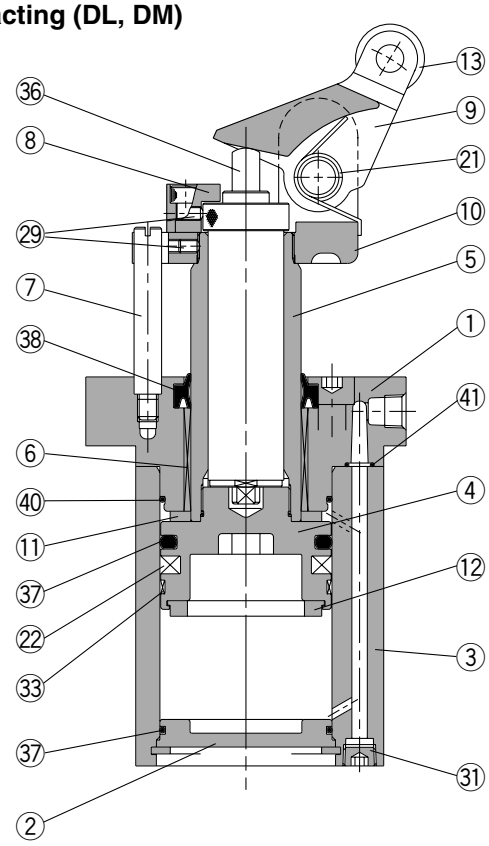

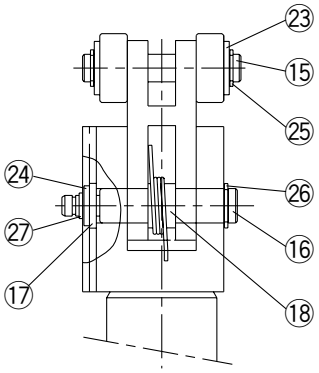

Double acting spring type (BL, BM)

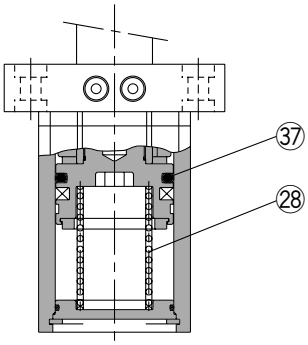

Single acting spring extended (TL, TM)

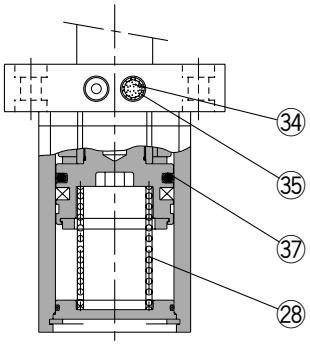

Parts list (Single acting)

No.	Description	Material	Note
1	**Rod cover**	Aluminium alloy	Metallic painted
2	**Bottom plate**	Aluminium alloy	Chromate
3	**Cylinder tube**	Aluminium alloy	Hard anodized
4	**Piston**	Aluminium alloy	Chromate
5	**Piston rod**	ø20: Stainless steel ø32, ø50, ø63, ø80: Carbon steel	Hard chromium electro plating
6	**Bushing**	Bronze alloy	
7	**Guide rod**	Carbon steel	Hard chromium electro plating
8	**Stopper screw**	Stainless steel	
9	**Lever**	Carbon steel	Nickel plated
10	**Lever holder**	Carbon steel	Nickel plated
11	**Bumper A**	Urethane rubber	
12	**Bumper B**	Urethane rubber	
13	**Roller**	Resin	-□□L
		Carbon steel	-□□M
14	**Spring pin**	Carbon tool steel	ø20, 32 only
15	**Roller pin**	Carbon steel	
16	**Lever pin**	Carbon steel	
17	**Ring A**	Aluminium alloy	Clear anodized
18	**Ring B**	Aluminium alloy	Clear anodized
19	**Adjustment dial**	Aluminium alloy	ø20, 32 only
20	**End rod**	Special steel	ø20, 32 only
21	**Lever spring**	Steel wire	
22	**Magnet**	—	
23	**Flat washer**	Steel wire	Nickel plated
24	**Flat washer**	Steel wire	Nickel plated
25	**Type C retaining ring for shaft**	Carbon tool steel	
26	**Type C retaining ring for shaft**	Carbon tool steel	
27	**Type C retaining ring for shaft**	Carbon tool steel	
28	**Return spring**	Steel wire	
29	**Hexagon socket head set screw**	Chrome molybdenum steel	
30	**Hexagon socket head set screw**	Chrome molybdenum steel	ø20 only
31	**Hexagon socket head plug**	Chrome molybdenum steel	Nickel plated
32	**Spring pin**	Carbon tool steel	ø20 only
33	**Wear ring**	Resin	
34	**Element**	Bronze	ø20 is socket set screw
35	**Retaining ring**	Carbon tool steel	ø32 to 80 only
36	**Shock absorber**	—	
37	**Piston seal**	NBR	
38	**Rod seal**	NBR	
39	**Scraper**	NBR	ø20, 32 only
40	**Tube gasket**	NBR	
41	**O-ring**	NBR	

Replacement parts/ Seal kit

Bore size (mm)	Kit no.			Contents
	Double acting	Double acting spring type	Single acting	
20	RSH20D-PS	RSH20T-PS		Set of items ㊲ to ㊶ in above table (excluding ㊳)
32	RSH32D-PS	RSH32T-PS		
50	RS1H50D-PS	RS1H50T-PS		Set of items ㊲ to ㊶ in above table (excluding ㊳ and ㊴)
63	RS1H63D-PS	RS1H63T-PS		
80	RS1H80D-PS	RS1H80T-PS		

∗Seal kit includes ㊲ to ㊶ (excluding ㊳) for ø20 to ø32 and ㊲ to ㊶ (excluding ㊳ and ㊴) for ø50 to ø80. Order the seal kit based on each bore size.

∗Since the seal kit does not include a grease pack, order it separately.

Grease pack part no.: GR-S-010 (10 g)

Replacement parts/ Shock absorber

Bore size (mm)	Order no.
20	RSH-R20
32	RSH-R32
50	RS1H-R50
63	RS1H-R63
80	RS1H-R80

Dimensions/Bore size: ø20

RSH20-15□□

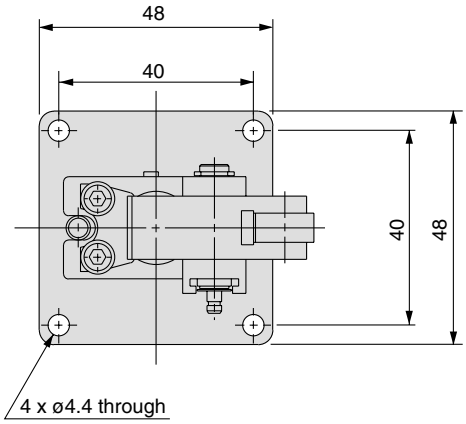

∗**The figure shows an extended piston rod.**

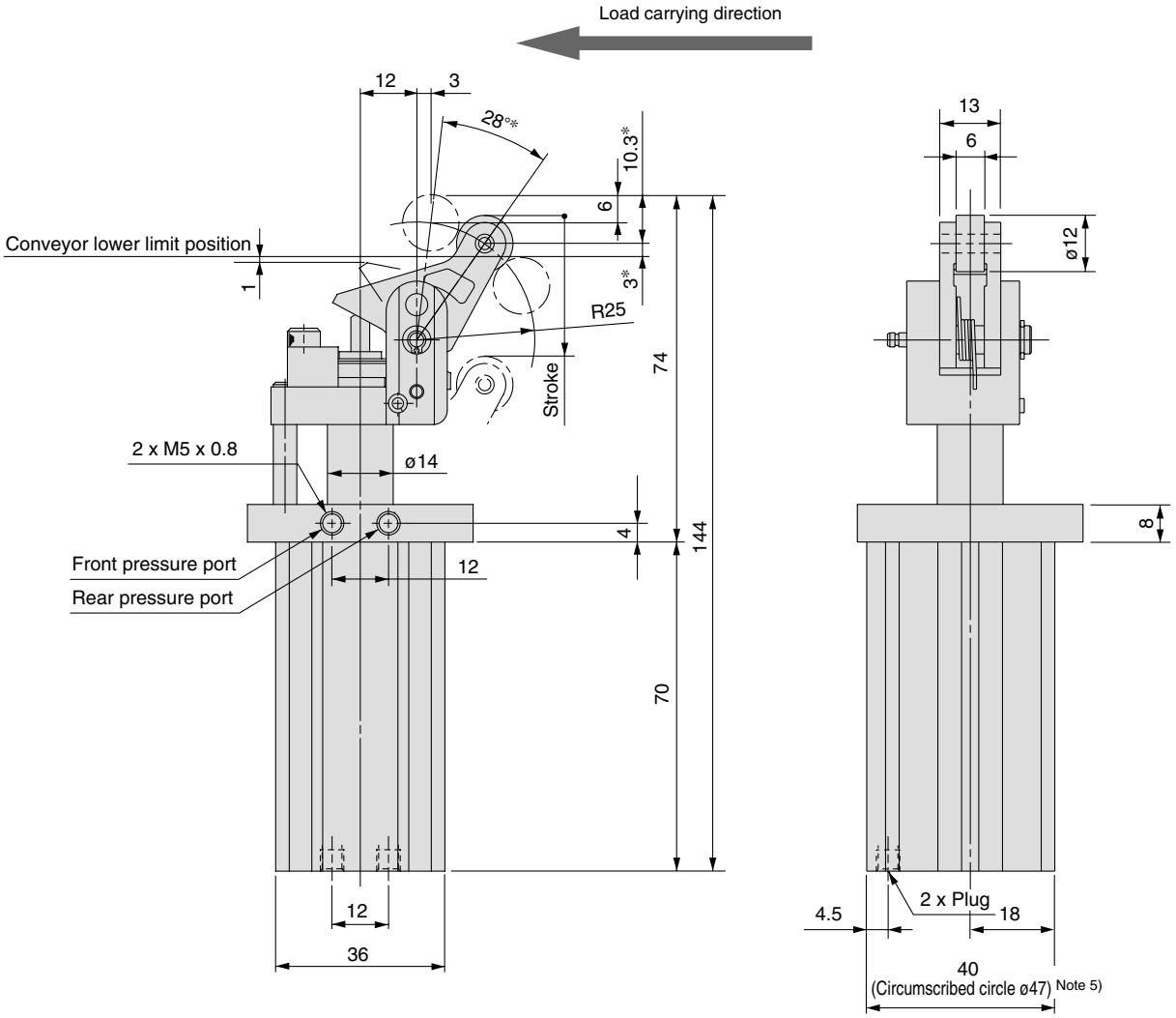

Note 1) The figure shows dimensions at the maximum energy absorption capacity.
Note 2) Dimensions with auto switch are identical to the above.
Note 3) The figure shows an extended piston rod.
Note 4) The dimensions marked with "∗" vary according to adjustment of the shock absorber dial.
Note 5) Circumscriber circle ø47 means that diameter of the circle circumscribed to the cylinder angles. Mounting hole diameter must be ø48. Be careful of the interference between the lever and the mounting base when mounted from the lever side. Thus, the thickness of the mounting base must be 8 mm or less.

Dimensions/Bore size: ø32

RSH32-20□□

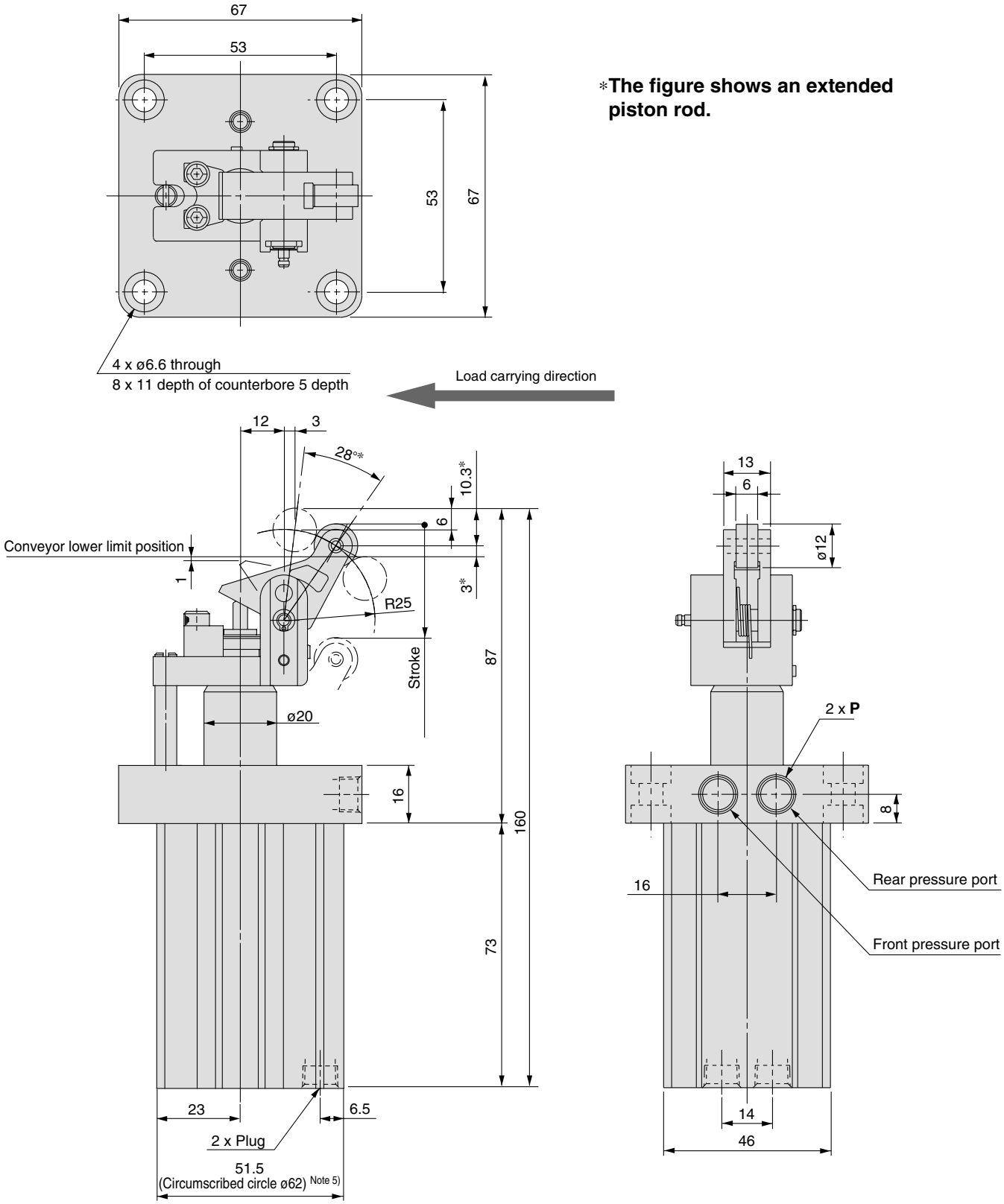

Note 1) The figure shows dimensions at the maximum energy absorption capacity.
Note 2) Dimensions with auto switch are identical to the above.
Note 3) The figure shows an extended piston rod.
Note 4) The dimensions marked with "∗" vary according to adjustment of the shock absorber dial.
Note 5) Circumscriber circle ø62 means that diameter of the circle circumscribed to the cylinder angles. Mounting hole diameter must be ø63. Be careful of the interference between the lever and the mounting base when mounted from the lever side. Thus, the thickness of the mounting base must be 9 mm or less.

P (Piping port)		
Nil	TN	TF
Rc 1/8	NPT 1/8	G 1/8

Dimensions/Bore size: ø50, ø63, ø80

RS1H 50/63/80 -□□□

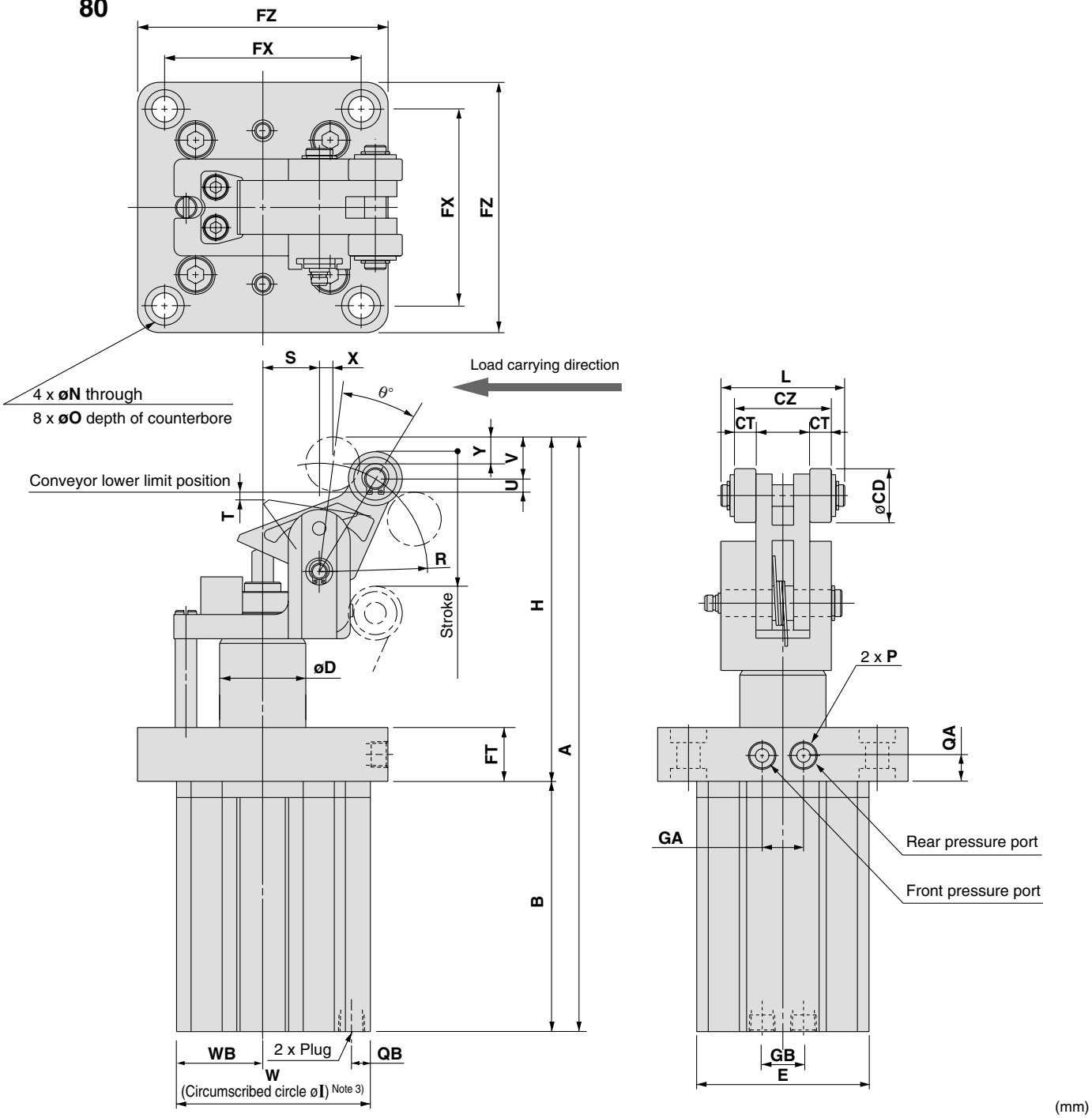

(mm)

Bore size (mm)	Stroke	A	B	CD	CT	CZ	D	E	FT	FX	FZ	GA	GB	H	Width across corners I	L	N	O	QA	QB
50	30	221	93	20	8	36	32	64	20	73	93	16	16	128	85	45	9	14 depth 5	10	7
63	30	243.5	99	20	10	45	40	77	25	90	114	24	24	144.5	103	54	11	18 depth 6	12.5	8.5
80	40	299.5	128	25	10	45	50	98	25	110	138	24	35	171.5	132	56	13	20 depth 6	12.5	10

Bore size (mm)	Stroke	R	S	T	U	V	W	WB	X	Y	θ°
50	30	40	21	2	5.5	15.5	72	32	5	10	24
63	30	47	24.5	3.5	6.4	16	87.5	38.5	5	10	24
80	40	54	31	3	6.7	19.4	109	49	6	12.5	23

Model	**P** (Piping port)		
	Nil	**TN**	**TF**
RS1H50	Rc 1/8	NPT 1/8	G 1/8
RS1H63	Rc 1/4	NPT 1/4	G 1/4
RS1H80	Rc 1/4	NPT 1/4	G 1/4

Note 1) The figure shows dimensions at the maximum energy absorption capacity.
Note 2) The figure shows an extended piston rod.
Note 3) Circumscriber circle øI means that diameter of the circle circumscribed to the cylinder angles. Mounting hole diameter must be ø(I+1). Be careful of the interference between the lever and the mounting base when mounted from the lever side. Thus, the thickness of the mounting base must be the values shown below or less. (RS1H50 : 10mm RS1H63 : 15mm RS1H80 : 18mm)

Auto Switch Proper Mounting Position (Detection at Stroke End)

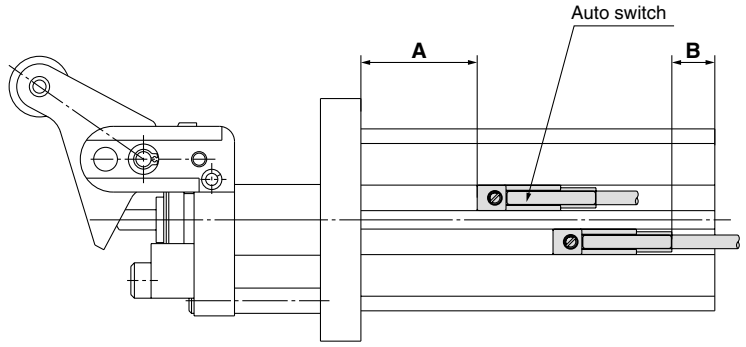

Auto switch proper mounting position (mm)

Auto switch models / Bore size	D-M9□ D-M9□W D-M9□AVL		D-M9□V D-M9□WV		D-M9□AL		D-Z7□/Z80 D-Y59□/Y7P/Y7□W		D-Y69□/Y7PV D-Y7□WV		D-Y7BAL	
	A	B	A	B	A	B	A	B	A	B	A	B
20	23	8.5	23	10.5	23	6.5	18	8(6.5)	18	9.5	18	2
32	18.5	11	18.5	13	18.5	9	13.5	10.5(9)	13.5	12	13.5	4.5
50	27	12.5	27	14.5	27	10.5	22	12(10.5)	22	13.5	22	6
63	29.5	16	29.5	18	29.5	14	24.5	15.5(14)	24.5	17	24.5	9.5
80	42	22.5	42	24.5	42	20.5	37	22(20.5)	37	23.5	37	16

The values inside ( ) are for D-Z73.

Note) Adjust the auto switch after confirming the operating conditions in the actual setting.

Operating Range

(mm)

Auto switch models	Bore size				
	20	**32**	**50**	**63**	**80**
D-M9□/M9□V D-M9□W/M9□WV D-M9□AL/M9□AVL	5.5	6.0	6.5	7.5	7.5
D-Z7□/Z80	8	10	9	10	11
D-Y59□/Y69□ D-Y7P/Y7PV D-Y7□W/Y7□WV D-Y7BAL	5	3.5	5.5	5.5	6.5

∗Since the operating range is provided as a guideline including hysteresis, it cannot be guaranteed (assuming approximately ±30% dispersion). It may vary substantially depending on an ambient environment.

Auto Switch Mounting Bracket/Part No.

Auto switch models	Bore size (mm)
	ø20 to ø80
D-M9□/M9□V D-M9□W/M9□WV D-M9□AL/M9□AVL	BMG2-012

D-M9□(V)/M9□W(V)/M9□A(V)L

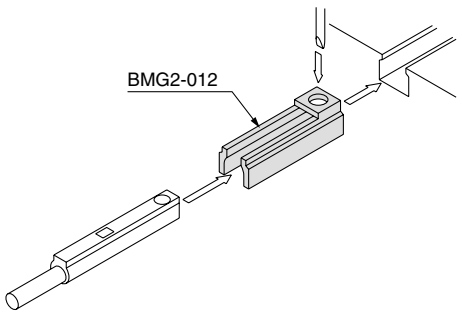

Besides the models listed in How to Order, the following auto switches are applicable. Refer to pages 1719 to 1827 for detailed specifications.

Auto switch type	Model	Electrical entry	Features
Solid state	D-Y69A, Y69B, Y7PV	Grommet (Parpendicular)	–
	D-Y7NWV, Y7PWV, Y7BWV		Diagnostic indication (2-color display)
	D-Y59A, Y59B, Y7P	Grommet (In-line)	–
	D-Y7NW, Y7PW, Y7BW		Diagnostic indication (2-color display)
	D-Y7BAL		Water resistance (2-color display)

∗For solid state auto switches, auto switches with a pre-wired connector are also available. Refer to pages 1784 and 1785 for details.

∗Normally closed (NC = b contact) solid state auto switches (D-F9G/F9H/Y7G/Y7H types) are also available. Refer to pages 1746 and 1748 for details.

Lever Detection Switch (Proximity Switch)

Proximity switch specifications/Maker: OMRON Co. Ltd.

Model	E2E-X1C1	E2E-X2D1-N
Applicable cylinder bore size	**RSH20, 32**	**RS1H50, 63, 80**
Output type	Normally open	
Power supply voltage (Operating voltage range)	12 to 24 VDC (10 to 30 VDC), Ripple 10% or less (P-P)	
Current consumption (Leakage current)	17 mA or less	0.8 mA or less
Response frequency	3 kHz	1.5 kHz
Control output (chest)	Open collector maximum 100 mA	3 to 100 mA
Indicator light	Detection indication (Red LED)	Operation indication (Red LED), Set operation indication (Green LED)
Ambient temperature	−25 to 70°C (No freezing)	
Operating ambient humidity	35 to 95% RH	
Residual voltage Note 1)	2 V or less	3 V or less
Withstand voltage Note 2)	500 VAC	1000 VAC
Vibration	Endurance 10 to 55 Hz, Duplex amplitude 1.5 mm X,Y,Z direction each 2h	
Impact	Endurance 500 m/s² (approx. 50 G), X, Y, Z direction each 10 times	
Enclosure	IEC standards IP67 (Immersion proof shape and oil proof shape by JEM standards IP67G)	

Note 1) At load current 100 mA and cord length of 2 m
Note 2) Between case and whole charging part

Dimensions

E2E-X1C1 (For RSH20, 32)

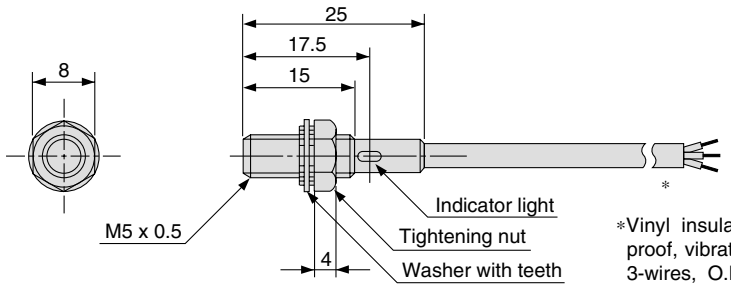

∗Vinyl insulation round cord (oil proof, vibration proof) 0.14 mm², 3-wires, O.D. ø2.9, Standard 2 m, Cord extension (Individual metal piping), Max. 100 m

E2E-X2D1-N (For RS1H50, 63, 80)

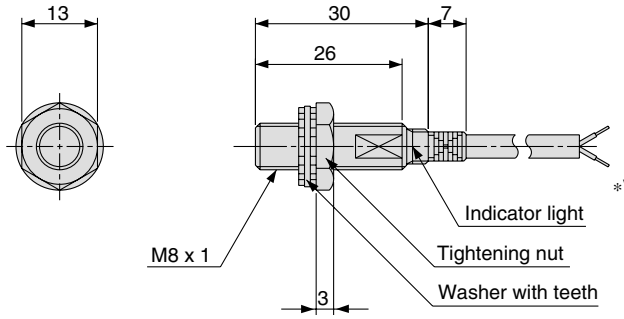

∗Vinyl insulation round cord ø3.5 (18/ø0.12), 2-wire, Standard 2 m, Cord extension (Individual metal piping), Max. 200 m

Output Circuit

E2E-X1C1/3-wire

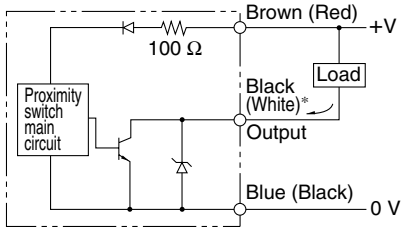

∗ Maximum 100 mA (load current)

E2E-X2D1-N/2-wire

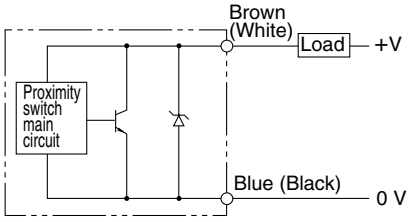

Mounting Position

●E2E-X1C1 (For RSH20, 32)

While holding the lever in the detection range of the switch, screw in the switch gradually until the indicator light (red) turns on. Then, screw the switch in further, halfway between the turn-on point and the lever.

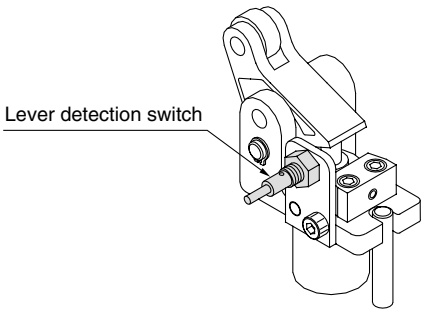

●E2E-X2D1-N (For RS1H50, 63, 80)

While holding the lever in the detection range of the switch, screw in the switch until the indicator light (green) turns on. Then, give an additional half rotation of screw. After that, incline the lever by 90° and confirm that the indicator light is not on and does not show either red or green.

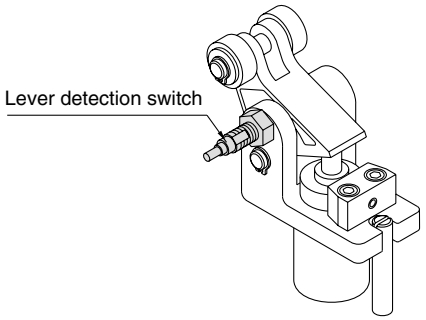

Series RSH/RS1H
Specific Product Precautions

Be sure to read before handling.
Refer to front matters 42 and 43 for Safety Instructions and pages 3 to 11 for Actuator and Auto Switch Precautions.

Instructions

⚠ Caution

1. Shock absorber capacity variable adjustment method (ø50 to ø80)

To stop the work gently, loosen the fixing screw (M4) on the stopper and turn the shock absorber dial according to the energy value of the transferred object to select the optimum absorption position (retardation value). After adjustment, tighten the fixing screw firmly to secure the shock absorber dial.
Note 1) Cautions for adjustment
When adjusting the shock absorber retardation value, first try the maximum value and then proceed to smaller values. If the energy value of the transferred work piece is larger than the retardation value of the shock absorber, an excessive load will be applied to the lever and may cause malfunction.
Note 2) Although it is not possible to change the shock absorber drag value of ø20 and ø32 types, the shock absorber stroke can be changed by adjust-ing the height of the adjustment dial (6st to 4st.)

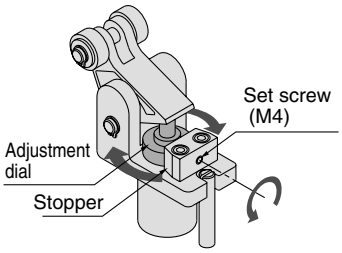

2. How to change the positional relationship between the transfer and piping directions

The positional relationship between the transfer and piping directions can be changed in 90◦ increments (or 180◦ increments in case of ø20).

●ø20
Loosen the fixing screw (M3) beside the rod cover and pull up the guide rod. The lever is released to allow 180° rotations.

●ø32 to ø80
Fit a driver (−) into the notch on the guide rod end surface and loosen the guide rod. The lever is released to allow rotations in 90° increments.

ø20

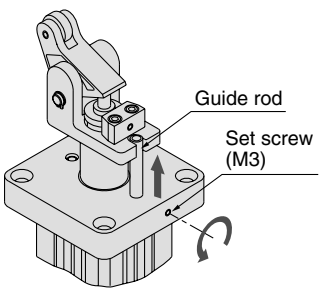

ø32, ø50, ø63, ø80

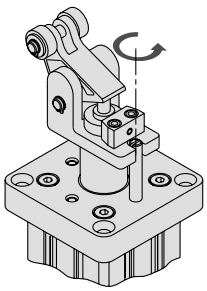

3. How to replace shock absorber during maintenance

Loosen the hexagon socket head bolts and shock absorber fixing screw (M4) on the stopper to remove the stopper from the lever holder. Incline the lever by 90◦ and pull out the shock absorber. (In case of ø20 and ø32, remove the stopper, loosen the adjustment dial and then pull out the shock absorber.)
∗Cautions for assembly
After replacing the shock absorber, tighten the bolts and fixing screw firmly and apply grease to the shock absorber rod end surface.

ø20, ø32

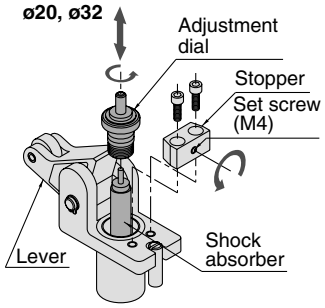

ø50 to ø80

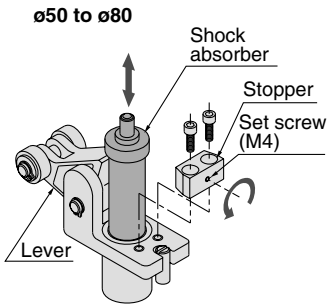

Selection

⚠ Danger

1. Use the equipment only within the specified operating range.

If the condition exceeds the specified operating range, it will cause excessive impact or vibration to the stopper cylinder, leading to possible damages.

⚠ Caution

1. Do not collide the pallet while the lever is standing erect.

In case of a lever with built-in shock absorber type, do not collide the next pallet while the lever is standing erect. Otherwise, all energy will be applied to the cylinder body.

2. When a load directly connected to the cylinder is stopped at an intermediate position:

Apply the operating range in the catalog only in these cases where the stopper cylinder is used to stop pallets on a conveyor belt. When using the stopper cylinder to stop loads directly connected to a cylinder or some other equipment, a lateral load is applied as the cylinder thrust. Consult SMC in such cases.

Mounting

⚠ Caution

1. Do not apply rotational torque to the cylinder rod.

Align the cylinder parallel to the working face of the pallet working when installing in order to prevent rotational torque working on the cylinder rod.

2. Do not scratch or gouge the sliding part of the piston rod or guide rod.

Scratches and gouges may damage the packing, causing air leakage or malfunction.

Operation

⚠ Caution

1. In case of cylinders with locking mechanism, do not apply an external force from the opposite side when the lever is locked.

Lower the cylinder before adjusting the conveyor or moving the pallet.

2. In case of cylinders with locking mechanism, do not collide the pallet and roller when the lever is locked.

If the pallet collides with the roller in the locked state, it may cause lever malfunction. (The lever is released when the cylinder is fully retracted.)

3. Do not let your hand become caught when operating the cylinder.

The lever holder goes up and down while the cylinder is in operation. Pay sufficient attention not to let your hand or fingers become caught between the rod cover and lever holder.

4. Do not let water, cutting oil or dust splash on the equipment.

It can cause oil leakage and malfunction of the shock absorber.

Specific Product Precautions 2

Be sure to read before handling.

Selection (RSH, RS1H)

⚠ Danger

1. Use the equipment only within the specified operating range.

If the condition exceeds the specified operating range, it will cause excessive impact or vibration to the stopper cylinder, leading to possible damages.

⚠ Caution

1. Do not collide the pallet while the lever is standing erect.

In case of a lever with built-in shock absorber type, do not collide the next pallet while the lever is standing erect. Otherwise, all energy will be applied to the cylinder body.

2. When a load directly connected to the cylinder is stopped at an intermediate position:

Apply the operating range in the catalog only in these cases where the stopper cylinder is used to stop pallets on a conveyor belt. When using the stopper cylinder to stop loads directly connected to a cylinder or some other equipment, a lateral load is applied as the cylinder thrust. Please consult with SMC in such cases.

Mounting (RSH, RS1H)

⚠ Caution

1. Do not apply rotational torque to the cylinder rod.

Align the cylinder parallel to the working face of the pallet working when installing in order to prevent rotational torque working on the cylinder rod.

2. Do not scratch or gouge the sliding part of the piston rod or guide rod.

Scratches and gouges may damage the packing, causing air leakage or malfunction.

Operation (RSH, RS1H)

⚠ Caution

1. In case of an end lever type with locking mechanism, do not apply an external force from the opposite side when the lever is locked.

Lower the cylinder before adjusting the conveyor or moving the pallet.

2. Do not let your hand become caught when operating the cylinder.

The lever holder goes up and down while the cylinder is in operation. Pay sufficient attention not to let your hand or fingers become caught between the rod cover and lever holder.

3. Do not let water, cutting oil or dust splash on the equipment.

It can cause oil leakage and malfunction of the shock absorber.

Selection (RSA)

⚠ Caution

1. Do not allow pallets to strike the lever when it is standing up.

Do not allow pallets to strike the lever when it is standing up (after the shock absorber has absorbed energy), because the cylinder body will be subjected to the full energy of the impact.

2. Do not use a stopper cylinder for intermediate stopping of loads directly connected to a cylinder, etc.

The operating ranges shown in the catalog should only be used for stopping pallets on a conveyor. If loads connected directly to a cylinder, etc., are stopped with a stopper cylinder, the cylinder's thrust will become a lateral load. Please consult with SMC in this case.

Mounting (RSA)

⚠ Caution

1. Do not apply rotational torque to the cylinder rod.

To prevent rotational torque from being applied to the cylinder rod, mount so that the contact surfaces of the pallet and cylinder are parallel to one another.

2. Do not scratch or nick the sliding parts of the piston.

Damage to seals can cause air leakage and malfunction, etc.

Operation (RSA)

⚠ Caution

1. Do not apply external force from the opposite direction to the end lever type locking mechanism when the lever is locked.

When pallets move during conveyor adjustment, first lower the cylinder.

2. Be careful in the space between the cylinder and the lever holder.

Since the lever holder moves up and down during cylinder operation, be careful that hands and fingers, etc., are not caught between the rod and lever holder.

3. Do not allow the cylinder to be exposed to cutting oil, water or dust, etc.

Do not use the cylinder under conditions where it will be exposed to liquids such as cutting oil and water, or dust, etc. This can cause malfunction of the built-in shock absorber.

4. When making adjustments, be sure that transferred articles do not strike the cylinder until shock absorber resistance has been set to the maximum value.

If transferred articles strike the cylinder with energy greater than the resistance of the shock absorber, a load will be applied to the lever which can cause malfunction.
(It is set to maximum when shipped from the factory.)

Heavy Duty Stopper Cylinder New

ø50, ø63, ø80

RoHS

Weight

Reduced by up to 22%

Cylinder tube

Shortened by up to 0.35 in

(RS2H63-30 stroke)



Easy replacement of shock absorbers

Replaceable just by loosening the set screw

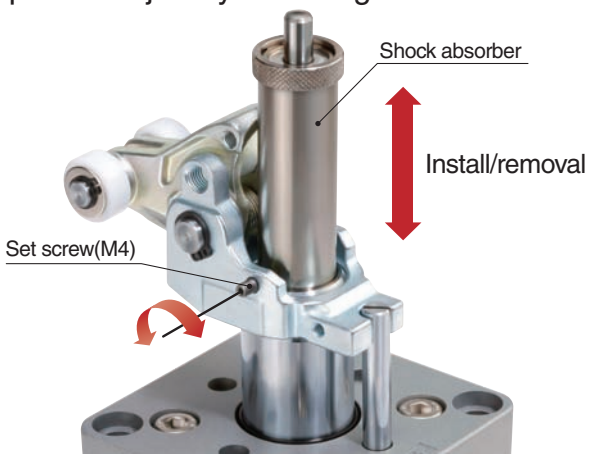

Stop the workpiece gently with adjustable shock absorber.

Resistance value can be adjusted by rotating the adjustment dial.

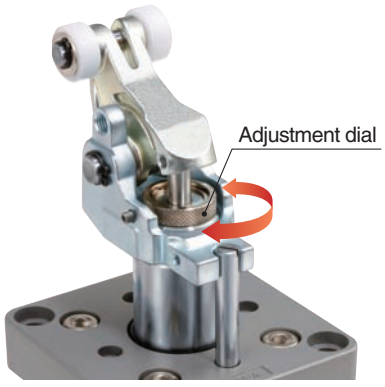

Series RS2H

SMC

CAT.NAS20-216A

Heavy Duty Stopper Cylinder

Weight reduced by up to 22%

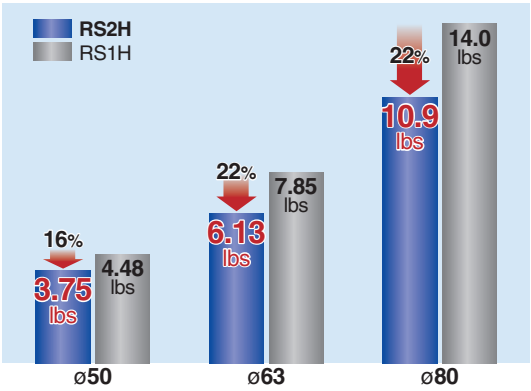

Shorter cylinder tube

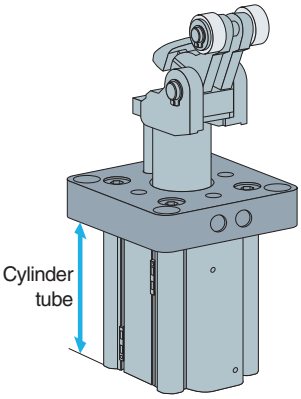

Dimensions

Bore size (mm)	New Series RS2H	Shortened by* inch (mm)
50	84.5	0.33 (8.5)
63	90	0.35 (9)
80	121	0.28 (7)

*Compared with the RS1H series.
*The height from the cylinder mounting surface to the roller is the same.

Better handling and visibility of the lock mechanism (Option)

The shape of the lock is changed. Easy to unlock manually, and instantly see whether it is locked.

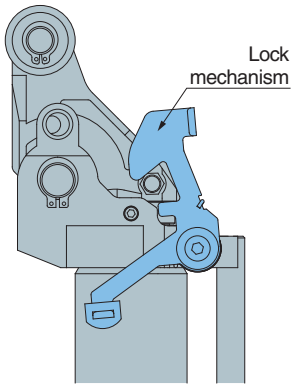

Piping is available from 2 directions.

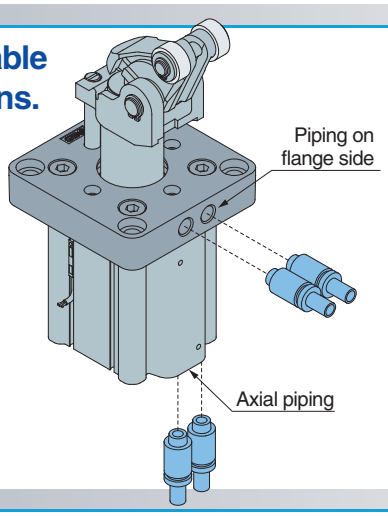

Mounting is interchangeable with conventional RS1H series.

Cylinder mounting pitch and the height from the mounting surface to the roller center are interchangeable with the RS1H series.

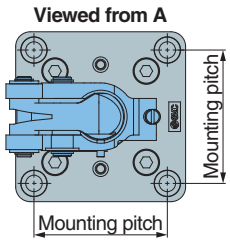

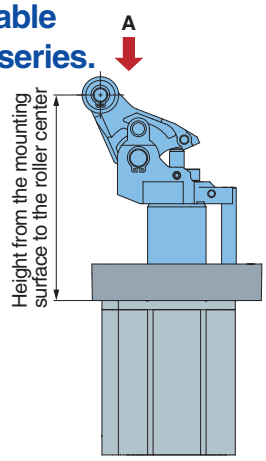

Compact auto switch (D-M9□) and magnetic field resistant auto switch (D-P3DW) can be mounted to three sides.

Compact auto switch can be directly mounted to round switch mounting groove.

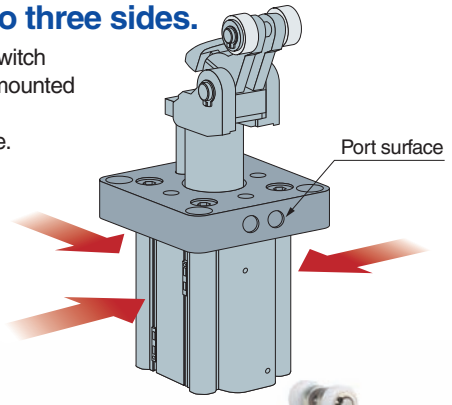

The roller can be selected from two materials to suit the application. (Resin, Carbon steel)

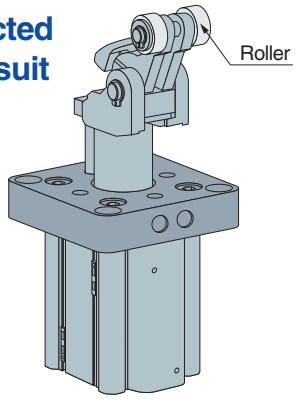



SMC

The roller lever direction can be changed in 90° steps.

To adapt the roller lever of the stopper to the work piece direction, the roller lever can be positioned in 4 different directions in 90° steps around the piston rod.

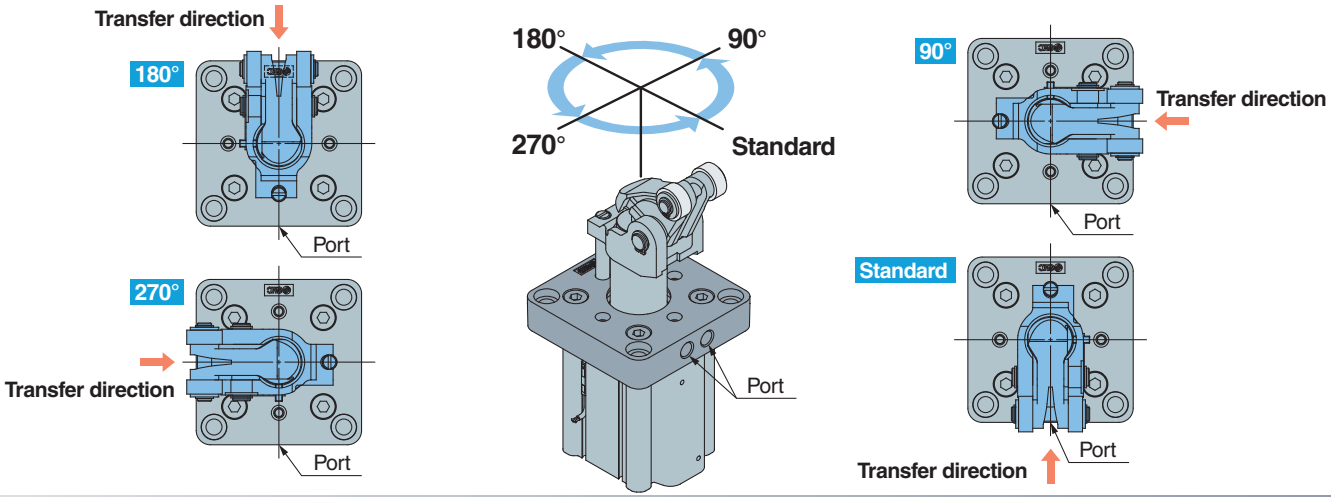

Options

With lock mechanism

Even in the case of a light pallet, the lock mechanism prevents the pallet from rebounding due to spring.

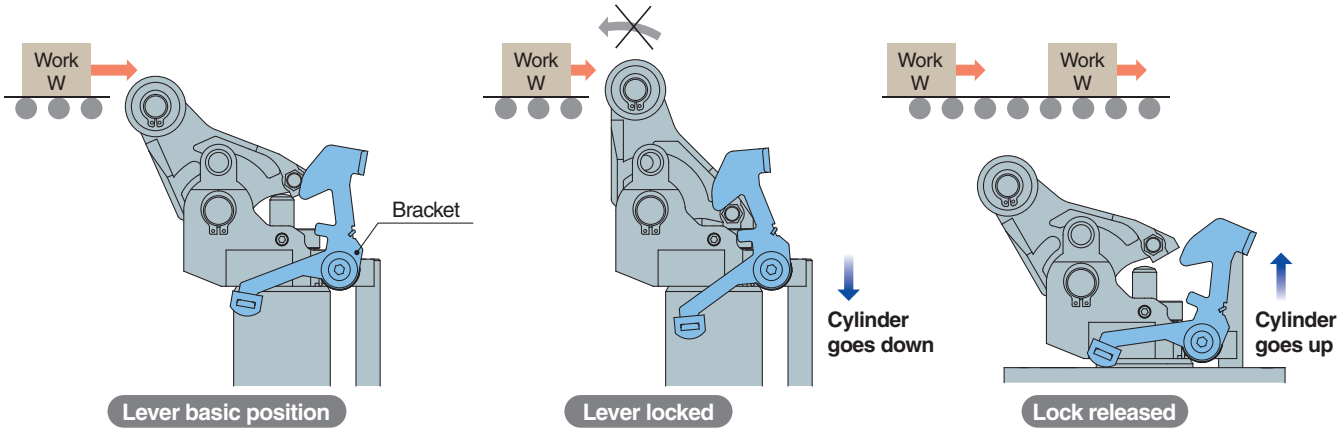

With cancel cap

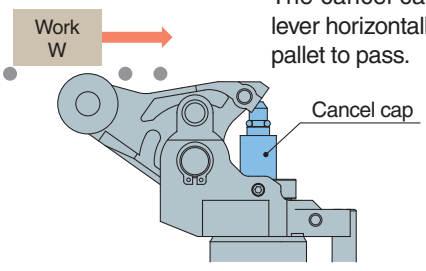

The cancel cap holds the lever horizontally allowing a pallet to pass.

With lever detection switch

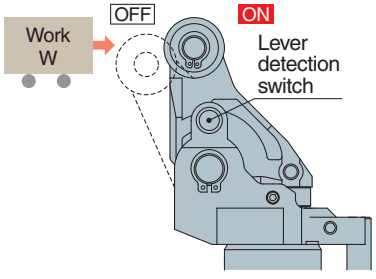

When the lever stands erect (when the energy is absorbed), the switch turns on a signal that determines the pallet has reached the stop position.

(For details of lever detection switch, refer to page 2.)

Series Variations

Series	Bore size (mm)	Standard stroke (mm)	Mounting	Action	Rod end configuration	Standard variation	Option			Page
		15 20 30 40				Built-in magnet	With lock mechanism	With cancel cap	With lever detection switch	
RSH	20	●	Flange	Double acting	Lever with built-in shock absorber	●	●	●	●	Refer to Best Pneumatics No.3.
	32	●				●	●	●	●	
New RS2H	50	●		Double acting spring type	Adjustable	●	●	●	●	Page 1
	63	●				●	●	●	●	
	80	●		Single acting/ spring extend		●	●	●	●	

Series RS2H
Model Selection

Operating Range

(Example)
Mass of transferred object: 661 lbs (300 kg),
Transfer speed: 20 m/min
Friction coefficient: μ = 0.1

(How to read graph)
In following graph, find the intersection of the **vertical axis representing the mass of 661 lbs (300 kg)** and the **horizontal axis representing the transfer speed of 65.6 ft/min (20 m/min)**. And select the **bore size ø63** positioned within the operating range of the cylinder.

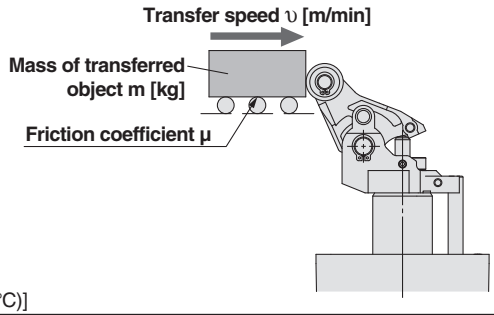

RS2H50-30□□

*The graphs indicate the values at normal temperature. [68° to 77°F (20 to 25°C)]

μ = 0.1

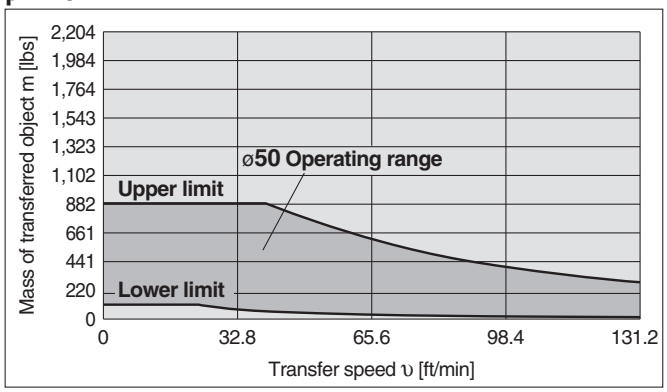

μ = 0.2

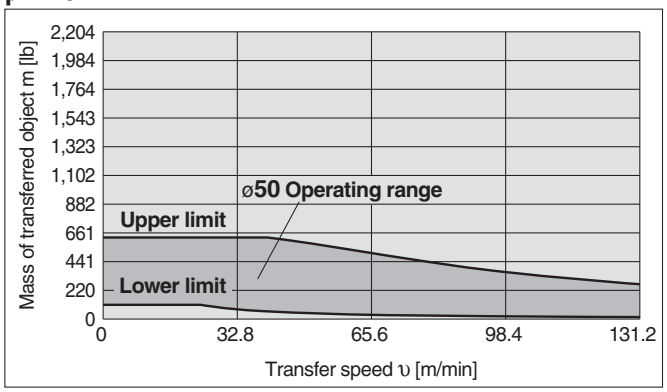

RS2H63-30□□

*The graphs indicate the values at normal temperature. [68° to 77°F (20 to 25°C)]

μ = 0.1

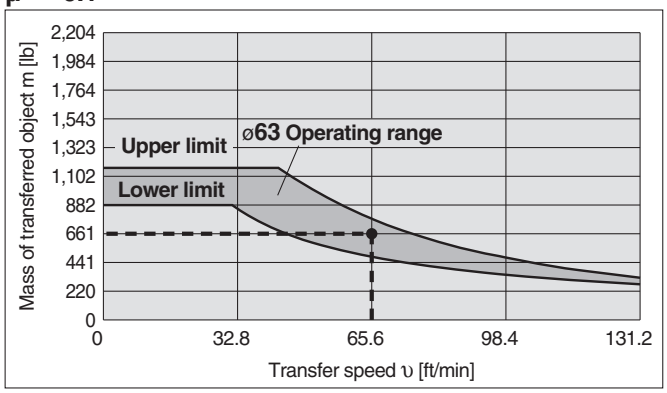

μ = 0.2

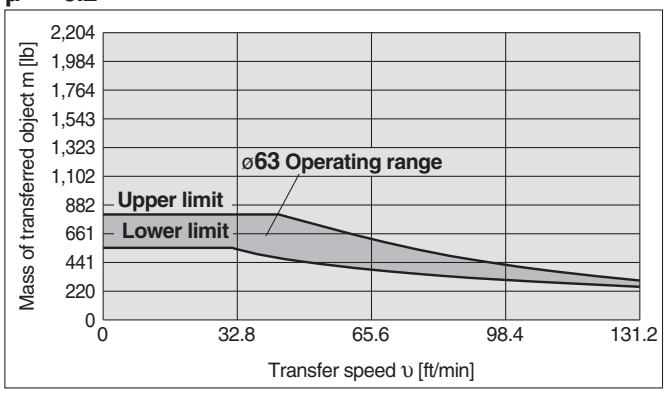

RS2H80-40□□

*The graphs indicate the values at normal temperature. [68° to 77°F (20 to 25°C)]

μ = 0.1

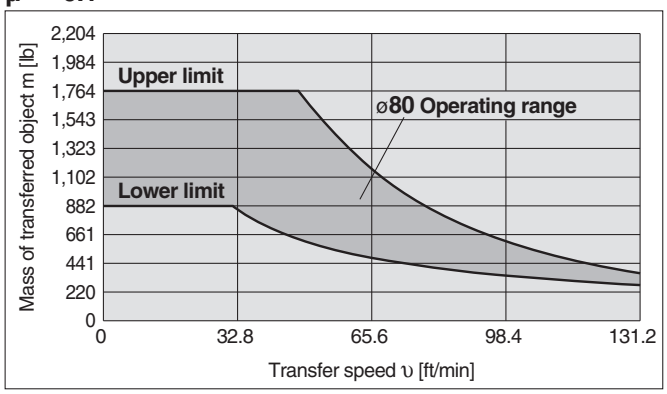

μ = 0.2

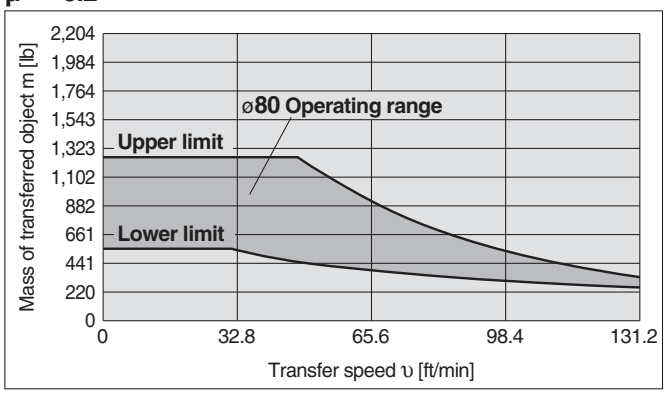

Lateral Load and Operating Pressure

The greater lateral load **F** needs higher cylinder operating pressure. Set the operating pressure by using the graph as a guideline.

RS2H50, 63, 80

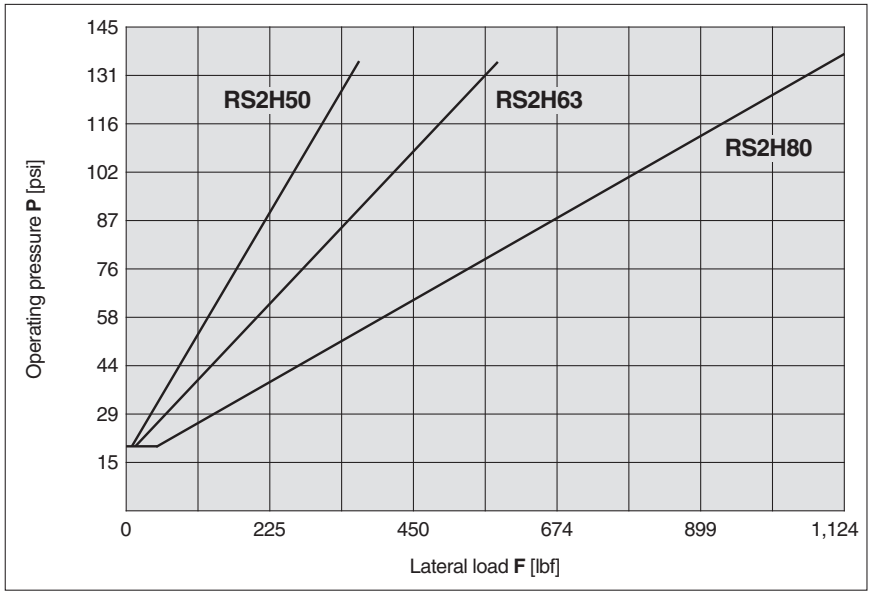

Even after the impact of the carried object is absorbed, lateral load acts on the stopper cylinder due to the friction generated between the conveyor and the carried object.

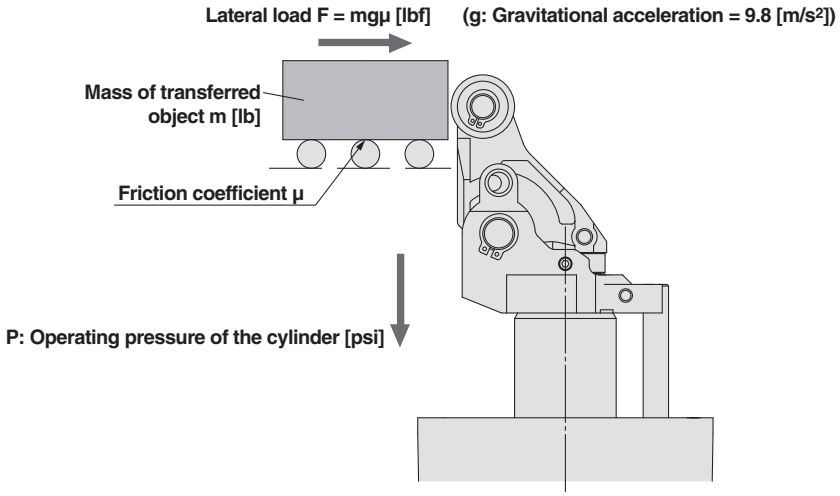

Heavy Duty Stopper Cylinder

Series RS2H

ø50, ø63, ø80

RoHS

How to Order

RS2H 50 □ □ – 30 D L – □ □ – M9W □

Bore size

50	50 mm
63	63 mm
80	80 mm

Port thread type

Nil	Rc
TN	NPT
TF	G

Piping direction

Nil	Flange side 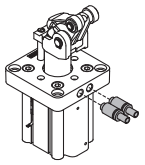
A	Axial direction (tube) 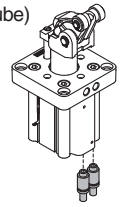

Cylinder stroke

30	30 mm (ø50, 63)
40	40 mm (ø80)

Action

D	Double acting
B	Double acting spring type
T	Single acting/spring extend

Roller material

L	Resin
M	Carbon steel

Option Note 1)

Nil	Without option
D	With lock mechanism
C	With cancel cap
S	With lever detection switch Note 2)

Note 1) Options can be combined. Indicate the option symbols according to the priority order of D,C,S.

Note 2) For details of the lever detection switch alone, refer to page 2.

Positional relationship of lever and port

Nil	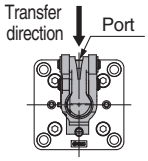	Q	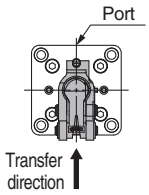
P	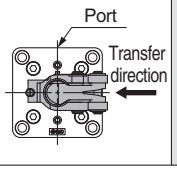	R	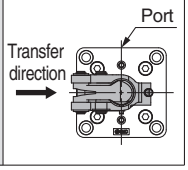

Number of auto switches (auto switch number mounted)

Nil	2 pcs.
S	1 pc.

Auto switch

Nil	Without auto switch (Built-in magnet)

∗For applicable auto switches, refer to the table below.
∗Auto switches are shipped together, (but not assembled).

Applicable Auto Switches/Refer to pages 1719 to 1827 in Best Pneumatics No. 3 for further information on auto switches.

Type	Special function	Electrical entry	Indicator light	Wiring (Output)	Load voltage DC		Load voltage AC	Auto switch model Perpendicular	Auto switch model In-line	Lead wire length (m) 0.5 (Nil)	1 (M)	3 (L)	5 (Z)	Pre-wired connector	Applicable load	
Solid state switch	—	Grommet	Yes	3-wire (NPN)	24 V	5 V,12 V	—	M9NV	M9N	●	●	●	○	○	IC circuit	Relay, PLC
				3-wire (PNP)				M9PV	M9P	●	●	●	○	○		
				2-wire		12 V		M9BV	M9B	●	●	●	○	○	—	
	Diagnostic indication (2-color display)			3-wire (NPN)		5 V,12 V		M9NWV	M9NW	●	●	●	○	○	IC circuit	
				3-wire (PNP)				M9PWV	M9PW	●	●	●	○	○		
				2-wire		12 V		M9BWV	M9BW	●	●	●	○	○	—	
	Water-resistant (2-color display)			3-wire (NPN)		5 V,12 V		M9NAV	M9NA	○	○	●	○	○	IC circuit	
				3-wire (PNP)				M9PAV	M9PA	○	○	●	○	○		
				2-wire		12 V		M9BAV	M9BA	○	○	●	○	○	—	
	Magnetic field resistant (2-color display)			2-wire (Non-polar)		—		—	P3DW	●	—	●	●	○		
Reed switch	—	Grommet	Yes	3-wire (NPN equivalent)	—	5 V	—	A96V	A96	●	—	●	—	—	IC circuit	—
			No	2-wire	24 V	12 V	100 V	A93V	A93	●	—	●	●	—	—	Relay, PLC
						5 V,12 V	100 V or less	A90V	A90	●	—	●	—	—	IC circuit	

∗Water-resistant type auto switch can be mounted to the models with the above mentioned part numbers, but this does not guarantee the water resistance of the cylinder.
∗For other applicable auto switches, please contact SMC.

∗Lead wire length symbols 0.5 m·····Nil (Example) M9NW
1 m····· M (Example) M9NWM
3 m····· L (Example) M9NWL
5 m····· Z (Example) M9NWZ

∗Solid state auto switches marked with a "○" symbol are produced upon receipt of order.

∗Since there are other applicable auto switches than listed, refer to page 5 for details.
∗For details about auto switches with pre-wired connector, refer to pages 1784 and 1785 in Best Pneumatics No. 3.
∗Auto switches are shipped together, (but not assembled).

SMC



Specifications

Bore size (mm)	50	63	80
Action	Double acting, Double acting spring type, Single acting/spring extend		
Rod end configuration	Lever with built-in shock absorber		
Fluid	Air		
Proof pressure	218 psi (1.5 MPa)		
Max. operating pressure	145 psi (1.0 MPa)		
Ambient and fluid temperature	14 to 140°F (–10 to 60°C) (No freezing)		
Lubrication	Not required (non-lube)		
Cushion	Rubber bumper		
Stroke length tolerance	$^{+1.4}_{0}$		
Mounting	Flange		
Port size (Rc, NPT, G)	1/8	1/4	1/4

Standard Strokes

(mm)

Bore size (mm)	Standard stroke
50	30
63	30
80	40

Weight

lb (kg)

Action	Rod end configuration	Bore size (mm)	Weight
Double acting	Lever with built-in shock absorber	**50**	3.75 (1.70)
		63	4.48 (2.78)
		80	10.9 (4.96)

Lever Detection Switch (Proximity Switch)

Proximity Switch Specifications/ Maker: OMRON Corporation

Model	E2E-X2D1-N
Output type	Normally open
Power supply voltage (Operating voltage range)	12 to 24 VDC (10 to 30 VDC) Ripple 10% or less (P-P)
Current consumption (Leakage current)	0.8 mA or less
Response frequency	1.5 kHz
Control output (Chest)	3 to 100 mA
Indicator LED	Operation indication (Red LED), Set operation indication (Green LED)
Ambient temperature	–13 to 158°F (–25 to 70°C) (No freezing)
Operating ambient humidity	35 to 95%RH
Residual voltage Note 1)	3 V or less
Withstand voltage Note 2)	1000 VAC
Vibration	Endurance 10 to 55 Hz, Double amplitude 1.5 mm X, Y, Z direction each 2 h
Impact	Endurance 500 m/s^2 (approx. 50 G), X, Y, Z direction each 10 times
Enclosure	IEC standards IP67 (Immersion proof and oil proof by JEM standards IP67G)

Note 1) At load current 100 mA and cord length of 2 m
Note 2) Between case and whole live part

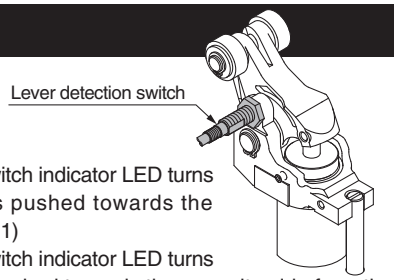

<Mounting position>

Confirm that the proximity switch indicator LED turns to green when the lever is pushed towards the proximity switch side. (Figure 1)
Confirm that the proximity switch indicator LED turns to green when the lever is pushed towards the opposite side from the proximity switch. (Figure 2)
Then, rotate the lever by 90° to confirm that the indicator LED of the proximity switch (red, green) does not turn on.
Fix the cylinder with screws included as accessories after confirming that there is no interference between the lever and the proximity switch.

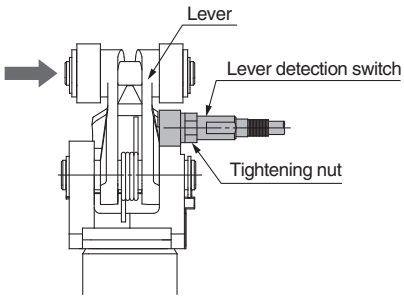

Figure 1

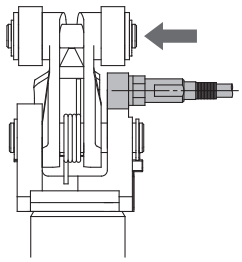

Figure 2

Dimensions

E2E-X2D1-N

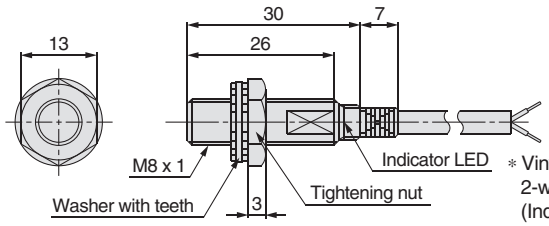

∗ Vinyl insulation round cord ø3.5 (18/ø0.12), 2-wire, Standard 2 m, Cord extension (Individual metal piping), Max. 200 m

Output Circuit

E2E-X2D1-N/2-wire

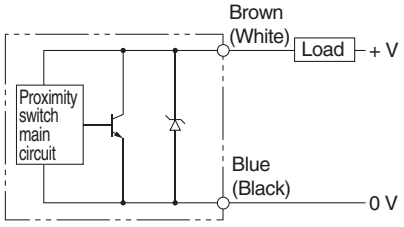

Construction

Double acting (DL, DM)

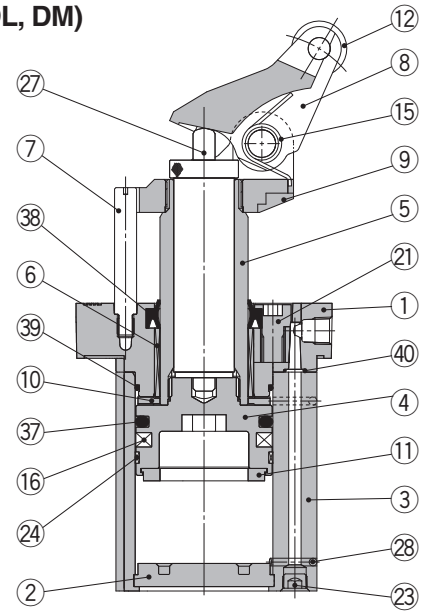

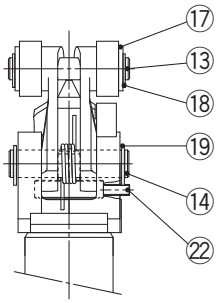

Double acting spring type (BL, BM)

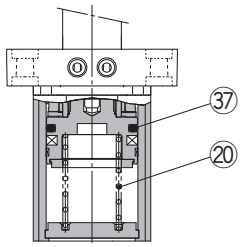

Single acting (TL, TM)

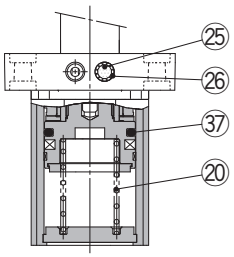

Options (With lock mechanism and cancel cap)

With lock mechanism (-D)

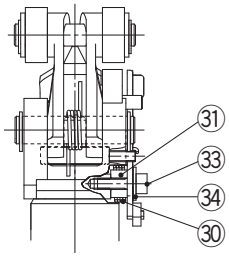

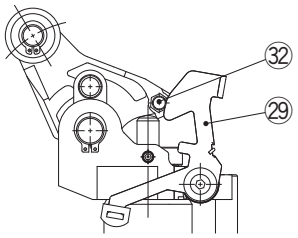

When cancel cap is used (-C)

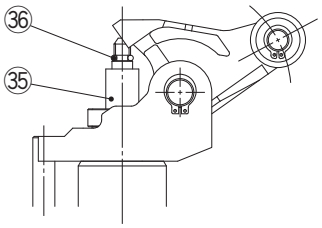

Component Parts (Single acting)

No.	Description	Material	Note
1	Rod cover	Aluminum alloy	Metallic painted
2	Bottom plate	Aluminum alloy	Hard anodized
3	Cylinder tube	Aluminum alloy	Hard anodized
4	Piston	Aluminum alloy	Chromated
5	Piston rod	Carbon steel	Hard chrome plated
6	Bushing	Resin/Copper alloy (Multiple layers)	
7	Guide rod	Carbon Steel	Hard chrome plated
8	Lever	Cast iron	Zinc chromated
9	Lever holder	Cast iron	Zinc chromated
10	Bumper A	Urethane	
11	Bumper B	Urethane	
12	Roller	Resin	-□□L
		Carbon steel	-□□M
13	Roller pin	Carbon steel	
14	Lever pin	Carbon steel	
15	Lever spring	Steel wire	
16	Magnet	—	
17	Flat washer	Steel wire	Zinc chromated
18	Type C retaining ring for shaft	Carbon tool steel	
19	Type C retaining ring for shaft	Carbon tool steel	
20	Return spring	Steel wire	-T□/-B□
21	Hexagon socket head cap screw	Chrome molybdenum steel	Zinc chromated
22	Hexagon socket head set screw	Chrome molybdenum steel	Zinc chromated
23	Hexagon socket head plug	Carbon steel	Zinc chromated
24	Wear ring	Resin	
25	Element	Bronze	-□TL/-□TM
26	Retaining ring	Carbon tool steel	-□TL/-□TM
27	Shock absorber	—	
28	Steel ball	Carbon steel	
29	Bracket assembly	Carbon steel	Used for -D (Lock type)

Component Parts (Single acting)

No.	Description	Material	Note
30	Bracket spring	Steel wire	Used for -D (Lock type)
31	Bracket spacer	Carbon steel	Used for -D (Lock type)
32	Lock pin	Carbon steel	Used for -D (Lock type)
33	Hexagon socket head cap screw	Chrome molybdenum steel	Used for -D (Lock type)
34	Flat washer	Carbon steel	Used for -D (Lock type)
35	Cancel cap	Aluminum alloy	Used for -C (Cancel cap type)
36	O-ring	NBR	Used for -C (Cancel cap type)
37	Piston seal	NBR	
38	Rod seal	NBR	
39	Tube gasket	NBR	
40	O-ring	NBR	

Replacement Parts/Seal Kit

Bore size (mm)	Kit no.			Contents
	Double acting	Double acting spring type	Single acting	
50	RS2H50D-PS	RS2H50T-PS		Set of nos. above ㊲ to ㊵ (excluding ㊳)
63	RS2H63D-PS	RS2H63T-PS		
80	RS2H80D-PS	RS2H80T-PS		

∗Seal kit includes ㊲ to ㊵ (excluding ㊳).
Order the seal kit based on each bore size.
∗Since the seal kit does not include a grease pack, order it separately.
Grease pack part no.: GR-S-010 (10 g)

Replacement Parts/Shock Absorber

Bore size (mm)	Order no.
50	RS2H-R50
63	RS2H-R63
80	RS2H-R80

Dimensions

Basic
ø50 to ø80

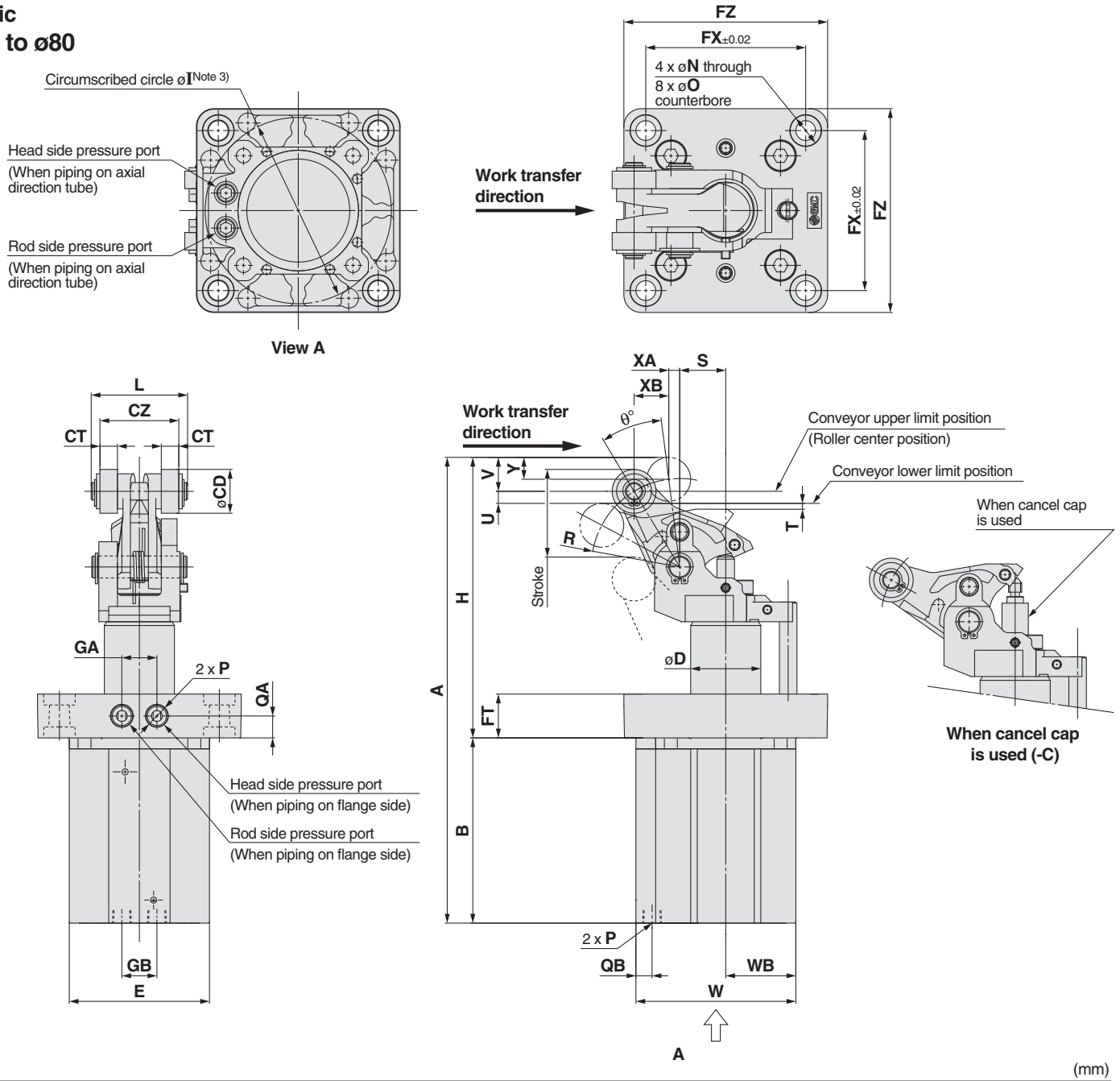

(mm)

Model	Stroke	A	B	CD	CT	CZ	D	E	FT	FX	FZ	GA	GB	H	Circumscribed circle I	L	N	O	QA	QB
RS2H50	30	212.5	84.5	20	8	36	32	64	20	73	93	16	16	128	85	44	9	14 depth 5	10	7
RS2H63	30	234.5	90	20	10	45	40	77	25	90	114	24	24	144.5	103	53	11	18 depth 6	12.5	8.5
RS2H80	40	292.5	121	25	10	45	50	98	25	110	138	24	35	171.5	132	54.5	13	20 depth 6	12.5	10

Model	Stroke	R	S	T	U	V	W	WB	XA	XB	Y	θ°
RS2H50	30	40	21	2	5.5	15.5	73	32	5	15.8	10	24
RS2H63	30	47	24.5	3.5	6.4	16	87.5	38.5	5	18.7	10	24
RS2H80	40	54	31	3	6.7	19	109	49	6	20.6	12.5	23

Model	**P** (Piping port)		
	Nil	**TN**	**TF**
RS2H50	Rc1/8	NPT1/8	G1/8
RS2H63	Rc1/4	NPT1/4	G1/4
RS2H80	Rc1/4	NPT1/4	G1/4

Note 1) Dimensions when equipped with auto switch are the same as drawing above.
Note 2) The figure shows an extended piston rod.
Note 3) Circumscribed circle ø**I** means that diameter of the circle circumscribed to the cylinder angles.
Mounting hole must be ø (**I** + 1).
Be careful of the interference between the lever and the mounting base when mounted from the lever side.
Thus, the thickness of the mounting base must be the values shown below or less.
(RS2H50: 10 mm RS2H63: 15 mm RS2H80: 18 mm)
Note 4) Set the conveyor height within the range from the lower limit position to the upper limit position (U dimension) shown in the figure.

Dimensions

With lock mechanism
ø50 to ø80

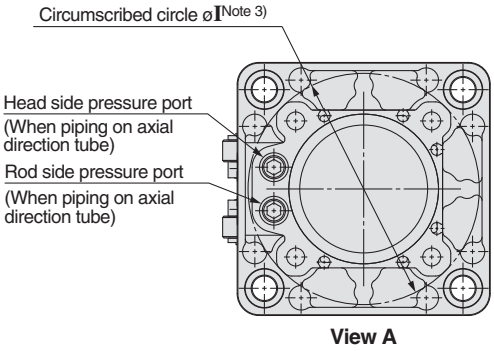

View A

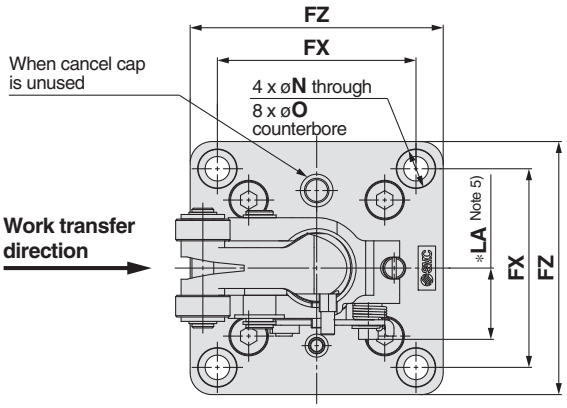

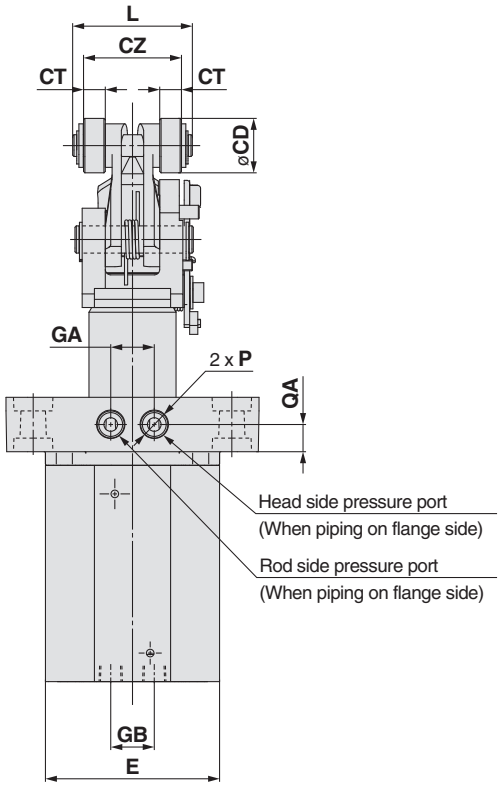

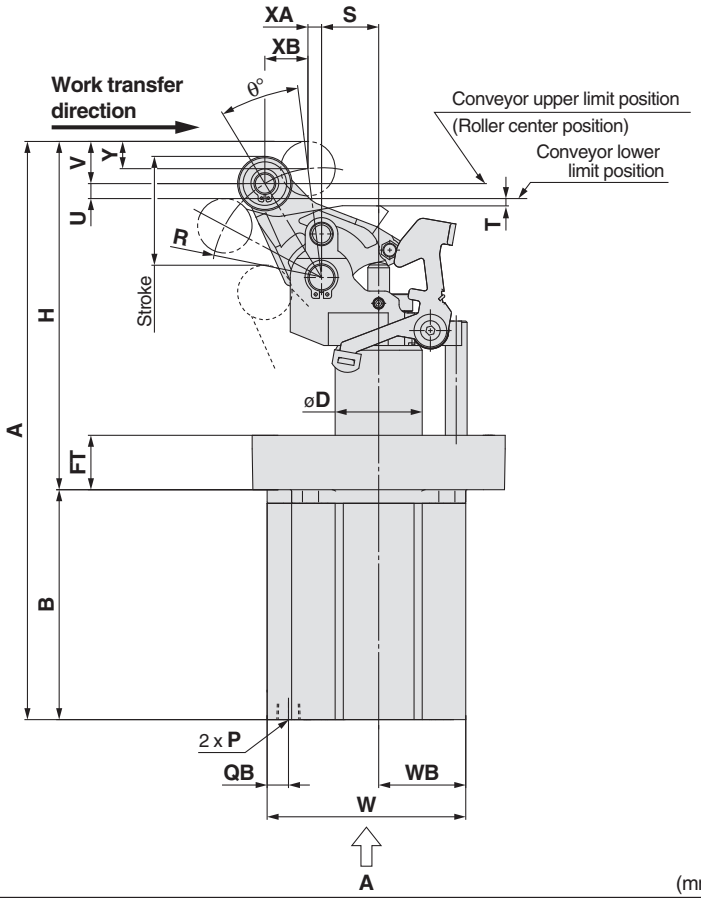

(mm)

Model	Stroke	A	B	CD	CT	CZ	D	E	FT	FX	FZ	GA	GB	H	Circumscribed circle I	L	*LA Note 5)	N	O	QA
RS2H50	30	212.5	84.5	20	8	36	32	64	20	73	93	16	16	128	85	44	26	9	14 depth 5	10
RS2H63	30	234.5	90	20	10	45	40	77	25	90	114	24	24	144.5	103	53	31	11	18 depth 6	12.5
RS2H80	40	292.5	121	25	10	45	50	98	25	110	138	24	35	171.5	132	54.5	38	13	20 depth 6	12.5

Model	Stroke	QB	R	S	T	U	V	W	WB	XA	XB	Y	θ°
RS2H50	30	7	40	21	2	5.5	15.5	72	32	5	15.8	10	24
RS2H63	30	8.5	47	24.5	3.5	6.4	16	87.5	38.5	5	18.7	10	24
RS2H80	40	10	54	31	3	6.7	19	109	49	6	20.6	12.5	23

Model	P (Piping port)		
	Nil	TN	TF
RS2H50	Rc1/8	NPT1/8	G1/8
RS2H63	Rc1/4	NPT1/4	G1/4
RS2H80	Rc1/4	NPT1/4	G1/4

Note 1) Dimensions when equipped with auto switch are the same as drawing above.
Note 2) The figure shows an extended piston rod.
Note 3) Circumscribed circle øI means that diameter of the circle circumscribed to the cylinder angles.
Mounting hole must be ø (I + 1).
Be careful of the interference between the lever and the mounting base when mounted from the lever side.
Thus, the thickness of the mounting base must be the values shown below or less.
(RS2H50: 10 mm RS2H63: 15 mm RS2H80: 18 mm)
Note 4) Set the conveyor height within the range from the lower limit position to the upper limit position (U dimension) shown in the figure.
Note 5) Dimensions other than those marked * (LA) are the same as the basic type (no locking type).

Auto Switch Mounting

Auto Switch Proper Mounting Position (Detection at Stroke End)

D-M9□
D-M9□W
D-M9□AVL
D-M9□V
D-M9□WV
D-M9□AL
D-A9□
D-A9□V

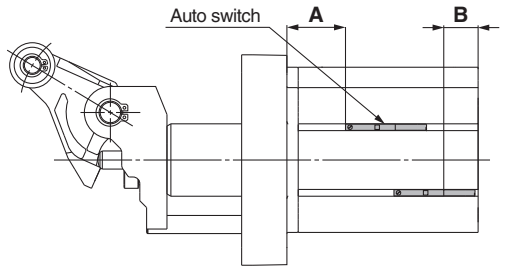

Auto Switch Proper Mounting Position

(mm)

Auto switch model / Bore size	D-M9□ D-M9□W D-M9□AVL		D-M9□V D-M9□WV		D-M9□AL		D-A9□ D-A9□V	
	A	B	A	B	A	B	A	B
50	23.5	9.0	23.5	11.0	23.5	7.0	19.5	10.5 (13.0)
63	25.5	12.5	25.5	14.5	25.5	10.5	21.5	14.0 (16.5)
80	39.5	19.5	39.5	21.5	39.5	17.5	35.5	21.0 (23.5)

The values inside ( ) are for the D-A96/A96V.
Note) Adjust the auto switch after confirming the operating conditions in the actual setting.

D-P3DW□

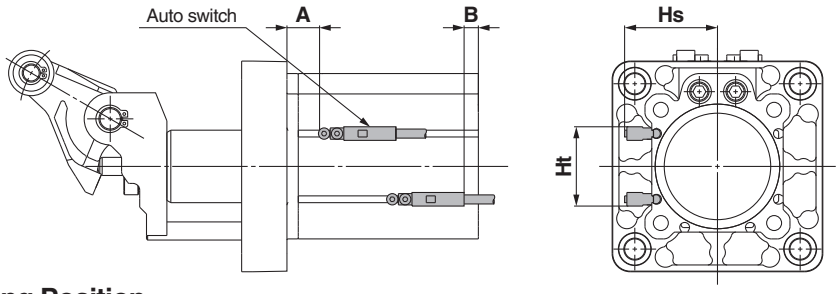

Auto Switch Proper Mounting Position

(mm)

Auto switch model / Bore size	D-P3DW□			
	A	B	Hs	Ht
50	14.5	6.5	41	35
63	16.5	10	47	44
80	30.5	17	55	54

Note) Adjust the auto switch after confirming the operating conditions in the actual setting.

∗ Auto switch mounting bracket is necessary for mounting the D-P3DW□ type. If you order the switch alone, the auto switch mounting bracket can be ordered using the part number below.

Operating Range

(mm)

Auto switch model	Bore size		
	50	**63**	**80**
D-M9□/M9□V **D-M9□W/M9□WV** **D-M9□AL/M9□AVL**	6	6	7
D-P3DW□	6	7	7
D-A9□/A9□V	8	9	9

∗ Since the operating range is provided as a guideline including hysteresis, it cannot be guaranteed. (assuming approximately ±30% dispersion)
It may vary substantially depending on an ambient environment.

Auto Switch Mounting Bracket/Part No.

Auto switch model	Bracket part no.
D-P3DW□	For round switch mounting groove: BQ6-032S

∗ When the auto switch is ordered on its own, the auto switch mounting bracket is not included. In that case, please order it separately.

Other than the applicable auto switches listed in "How to Order", the following auto switches are mountable.

∗Normally closed (NC=b contact) solid state auto switches (D-F9G/F9H) are also available. For details, refer to page 1746 in Best Pneumatics No.3.
∗With pre-wired connector is also available for solid state auto switches. For details, refer to pages 1784 and 1785 in Best Pneumatics No.3.

Auto Switch Mounting Brackets/Part No.

<table>
<tr><td>Applicable auto switches</td><td>D-M9□/M9□V
D-M9□W/M9□WV
D-M9□AL/M9□AVL
D-A9□/A9□V</td><td>D-P3DW□</td></tr>
<tr><td>Bore size (mm)</td><td>ø50 to ø80</td><td>ø50 to ø80</td></tr>
<tr><td>Auto switch mounting bracket part no.</td><td>—</td><td>BQ6-032S</td></tr>
<tr><td>Auto switch mounting bracket fitting parts lineup/Weight</td><td>—</td><td>① Hexagon socket head cap screw (M2.5 x 6 L)
② Auto switch mounting bracket (nut)
Weight: 5 g</td></tr>
<tr><td rowspan="2">Auto switch mounting surfaces</td><td>Surfaces with auto switch mounting slot</td><td>Surfaces with auto switch mounting slot</td></tr>
<tr><td> 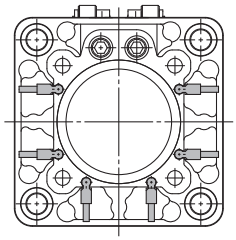 </td><td> 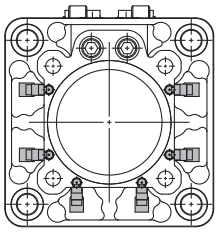 </td></tr>
<tr><td>Mounting of auto switch</td><td> 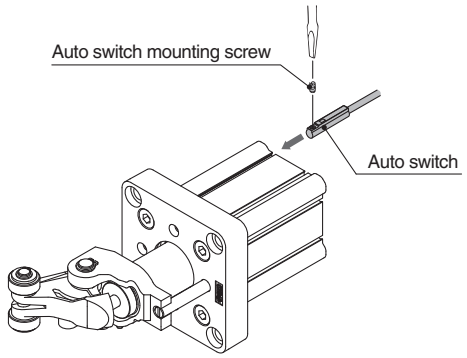

• When tightening the auto switch mounting screw, use a watchmakers' screwdriver with a handle 5 to 6 mm in diameter.
Tightening Torque for Auto Switch Mounting Screw
<table>
<tr><th>Auto switch model</th><th>Tightening torque</th></tr>
<tr><td>D-M9□(V)
D-M9□W(V)
D-M9□A(V)L</td><td>0.037 to 0.11 lbf·ft
(0.05 to 0.15 N·m)</td></tr>
<tr><td>D-A9□(V)</td><td>0.073 to 0.15 lbf·ft
(0.10 to 0.20 N·m)</td></tr>
</table></td><td>①Fix the auto switch and the auto switch mounting bracket temporarily by tightening the attached hexagon socket head cap screw (M2.5 x 9.5 L) 1 to 2 turns.
②Insert the temporarily tightened mounting bracket into the mating groove of the cylinder tube, and slide the auto switch onto the cylinder tube through the groove.
③Check the detecting position of the auto switch and fix the auto switch firmly with the hexagon socket head cap screw (M2.5 x 6 L, M2.5 x 9.5 L).*
④If the detecting position is changed, go back to step ②.
*The hexagon socket head cap screw (M2.5 x 6 L) is used to fix the mounting bracket and cylinder tube.
This enables the replacement of the auto switch without adjusting the auto switch position.
Note 1) Ensure that the auto switch is covered with the mating groove to protect the auto switch.
Note 2) The tightening torque for the hexagon socket head cap screw (M2.5 x 6 L, M2.5 x 9.5 L) is 0.15 to 0.22 lbf·ft (0.2 to 0.3 N·m).
Note 3) Tighten the hexagon socket head cap screws evenly.
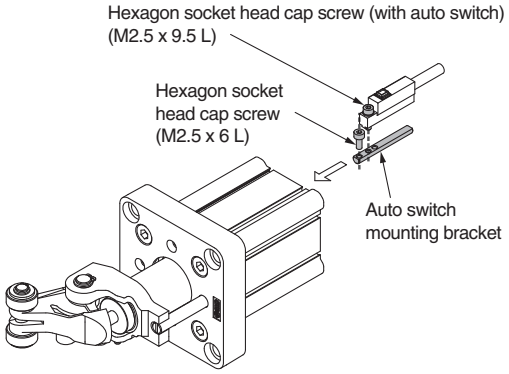
</td></tr>
</table>

Note) Auto switch mounting brackets and auto switches are enclosed with the cylinder for shipment.
For an environment that needs the water-resistant auto switch, select the D-M9□A(V)L type.

Prior to Use
Auto Switch Connection and Example

Basic Wiring

Solid state 3-wire, NPN

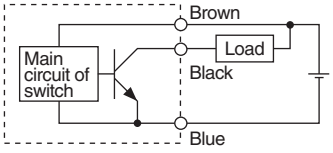

Solid state 3-wire, PNP

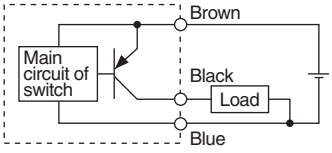

2-wire (Solid state)

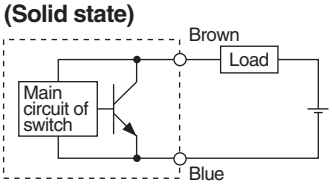

2-wire (Reed)

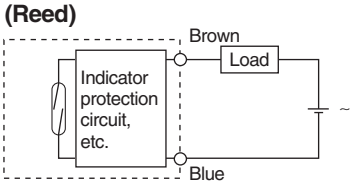

(Power supply for switch and load are separate.)

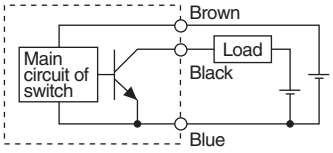

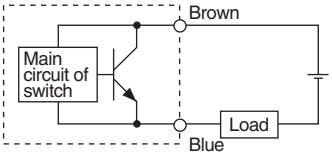

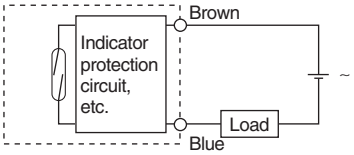

Example of Connection with PLC (Programmable Logic Controller)

• Sink input specifications

3-wire, NPN

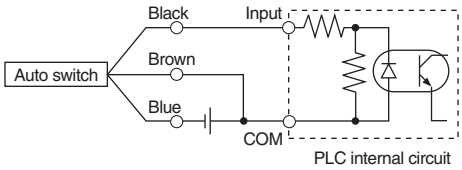

2-wire

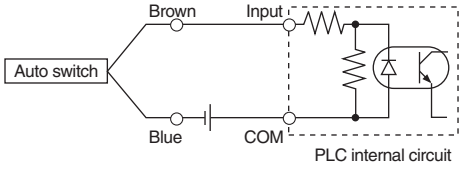

• Source input specifications

3-wire, PNP

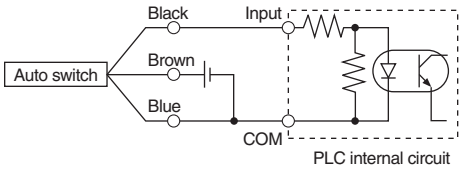

2-wire

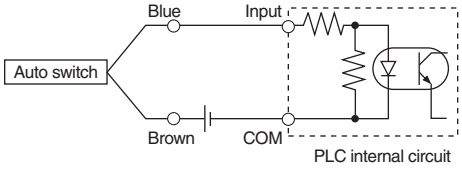

Connect according to the applicable PLC input specifications, as the connection method will vary depending on the PLC input specifications.

Example of AND (Series) and OR (Parallel) Connection

• 3-wire

AND connection for NPN output (Using relays)

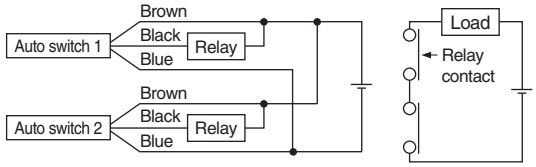

AND connection for NPN output (Performed with auto switches only)

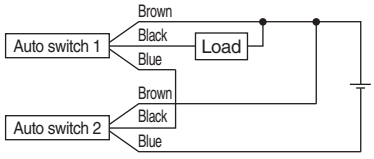

OR connection for NPN output

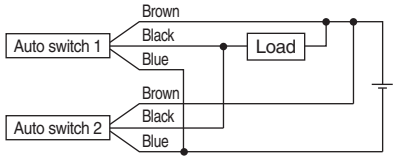

The indicator lights will light up when both of the auto switches are in the ON state.

• 2-wire

2-wire with 2-switch AND connection

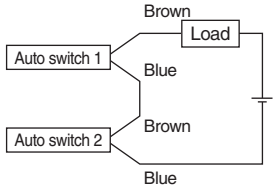

When two auto switches are connected in series, malfunction may occur because the load voltage will decrease in the ON state. The indicator lights will light up when both of the auto switches are in the ON state.

Load voltage at ON = Power supply voltage – Residual voltage x 2 pcs.
= 24 V – 4 V x 2 pcs.
= 16 V

Example: Power supply voltage 24 VDC
Auto switch internal voltage drop 4 V

2-wire with 2-switch OR connection

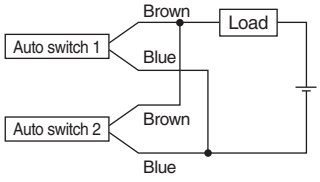

(Solid state)
When two auto switches are connected in parallel, malfunction may occur because the load voltage will increase in the OFF state.

Load voltage at OFF = Leakage current x 2 pcs. x Load impedance
= 1 mA x 2 pcs. x 3 kΩ
= 6 V

Example: Load impedance 3 kΩ
Auto switch leakage current 1 mA

(Reed)
Because there is no leakage current, the load voltage will not increase in the OFF state. However, depending on the number of auto switches in the ON state, the indicator lights may sometimes grow dim or not light up, due to the dispersion and reduction of the current flowing to the auto switches.

Series RS2H
Specific Product Precautions

Be sure to read before handling. Refer to back cover for Safety Instructions,"Handling Precautions for SMC Products" (M-E03-3) and the Operation Manual for Actuator and Auto Switch Precautions. Please download it via our website. http://www.smcworld.com

Instruction

⚠Caution

1. Shock absorber capacity variable adjustment method

To stop the work gently, loosen the set screw (M4) on the stopper and turn the shock absorber dial according to the energy value of the transferred object to select the optimum absorption position (retardation value). After adjustment, tighten the set screw firmly to secure the shock absorber dial.

• Set screw (M4) tightening torque: 1.01 lbf·ft (1.5 N·m)

Note) Cautions for adjustment

When adjusting the shock absorber retardation value, first try the maximum value and then proceed to smaller values. Confirm that the adjustment position is appropriate to avoid impact and bounce when the carried object hits the shock absorber.

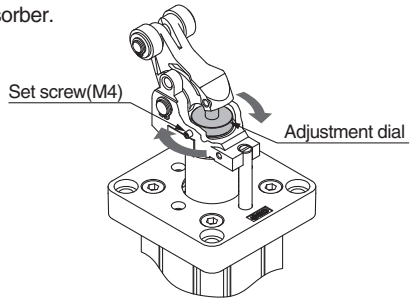

2. How to change the positional relationship between the transfer and piping directions

The positional relationship between the transfer and piping directions can be changed in 90° increments.

Apply a flat blade screwdriver to the notch in the guide rod end to remove the guide rod. The lever is released to allow rotations in 90° increments. When mounting the guide rod, apply glue for screw to the guide rod screw before tightening.

• Guide rod tightening torque
ø50: 3.8 lbf·ft (5.2 N·m)
ø63: 9.2 lbf·ft (12.5 N·m)
ø80: 18.1 lbf·ft (24.5 N·m)

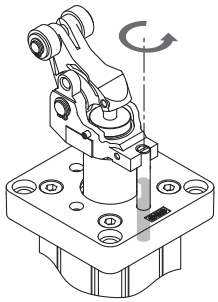

3. How to replace shock absorber during maintenance

Loosen the shock absorber set screw (M4) on the stopper to incline the lever by 90° and pull out the shock absorber.

Note) Cautions for assembly

After replacing the shock absorber, tighten the set screw firmly and apply grease to the shock absorber rod end surface.

• Set screw (M4) tightening torque: 1.10 lbf·ft (1.5 N·m)

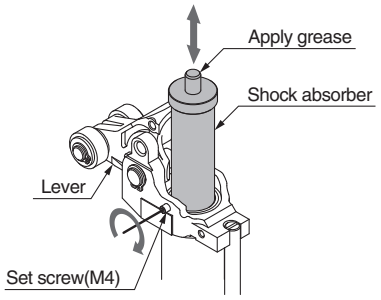

Selection

⚠Danger

1. Use the equipment only within the specified operating range.

If the condition exceeds the specified operating range, it will cause excessive impact or vibration to the stopper cylinder, leading to possible damage.

⚠Caution

1. Do not collide the pallet while the lever is standing erect.

For the lever with built-in shock absorber, do not collide the next pallet while the lever is standing erect. Otherwise, all energy will be applied to the cylinder body.

2. When stopping a load directly connected to the cylinder at an intermediate position:

Apply the operating range in the catalog only in these cases where the stopper cylinder is used to stop pallets on a conveyor belt. When using the stopper cylinder to stop loads directly connected to a cylinder or some other equipment, a lateral load is applied as the cylinder thrust. Please consult SMC in such cases.

Mounting

⚠Caution

1. Do not apply rotational torque to the cylinder rod.

Align the cylinder parallel to the working face of the pallet working when installing in order to prevent rotational torque working on the cylinder rod.

2. Do not scratch or gouge the sliding part of the piston rod or guide rod.

Scratches and gouges may damage the packing, causing air leakage or malfunction.

Operation

⚠Caution

1. For a cylinder with lock mechanism, do not apply an external force from the opposite side when the lever is locked.

Lower the cylinder before adjusting the conveyor or moving the pallet.

2. For a cylinder with lock mechanism, do not collide the pallet and the roller when the lever is locked.

If the pallet collides with the roller in the locked state, it may cause lever malfunction. (The lever is released when the cylinder is fully retracted.)

3. Do not let your hand become caught when operating the cylinder.

The lever holder goes up and down while the cylinder is in operation. Pay sufficient attention not to let your hand or fingers become caught between the rod cover and the lever holder.

4. Do not let water, cutting oil or dust splash on the equipment.

It can cause oil leakage and malfunction of the shock absorber.

5. The stopping condition of the carried object may vary due to changes in ambient temperature or changes in the shock absorber resistance over time.

Check the stopping condition periodically and adjust the shock absorber resistance as necessary.

⚠ Safety Instructions

These safety instructions are intended to prevent hazardous situations and/or equipment damage. These instructions indicate the level of potential hazard with the labels of **"Caution," "Warning"** or **"Danger."** They are all important notes for safety and must be followed in addition to International Standards (ISO/IEC)*1), and other safety regulations.

⚠ Caution: **Caution** indicates a hazard with a low level of risk which, if not avoided, could result in minor or moderate injury.

⚠ Warning: **Warning** indicates a hazard with a medium level of risk which, if not avoided, could result in death or serious injury.

⚠ Danger : **Danger** indicates a hazard with a high level of risk which, if not avoided, will result in death or serious injury.

*1) ISO 4414: Pneumatic fluid power – General rules relating to systems.
ISO 4413: Hydraulic fluid power – General rules relating to systems.
IEC 60204-1: Safety of machinery – Electrical equipment of machines. (Part 1: General requirements)
ISO 10218-1: Manipulating industrial robots - Safety.
etc.

⚠ Warning

1. The compatibility of the product is the responsibility of the person who designs the equipment or decides its specifications.
Since the product specified here is used under various operating conditions, its compatibility with specific equipment must be decided by the person who designs the equipment or decides its specifications based on necessary analysis and test results. The expected performance and safety assurance of the equipment will be the responsibility of the person who has determined its compatibility with the product. This person should also continuously review all specifications of the product referring to its latest catalog information, with a view to giving due consideration to any possibility of equipment failure when configuring the equipment.

2. Only personnel with appropriate training should operate machinery and equipment.
The product specified here may become unsafe if handled incorrectly. The assembly, operation and maintenance of machines or equipment including our products must be performed by an operator who is appropriately trained and experienced.

3. Do not service or attempt to remove product and machinery/equipment until safety is confirmed.
1. The inspection and maintenance of machinery/equipment should only be performed after measures to prevent falling or runaway of the driven objects have been confirmed.
2. When the product is to be removed, confirm that the safety measures as mentioned above are implemented and the power from any appropriate source is cut, and read and understand the specific product precautions of all relevant products carefully.
3. Before machinery/equipment is restarted, take measures to prevent unexpected operation and malfunction.

4. Contact SMC beforehand and take special consideration of safety measures if the product is to be used in any of the following conditions.
1. Conditions and environments outside of the given specifications, or use outdoors or in a place exposed to direct sunlight.
2. Installation on equipment in conjunction with atomic energy, railways, air navigation, space, shipping, vehicles, military, medical treatment, combustion and recreation, or equipment in contact with food and beverages, emergency stop circuits, clutch and brake circuits in press applications, safety equipment or other applications unsuitable for the standard specifications described in the product catalog.
3. An application which could have negative effects on people, property, or animals requiring special safety analysis.
4. Use in an interlock circuit, which requires the provision of double interlock for possible failure by using a mechanical protective function, and periodical checks to confirm proper operation.

⚠ Caution

1. The product is provided for use in manufacturing industries.
The product herein described is basically provided for peaceful use in manufacturing industries.
If considering using the product in other industries, consult SMC beforehand and exchange specifications or a contract if necessary.
If anything is unclear, contact your nearest sales branch.

Limited warranty and Disclaimer/ Compliance Requirements

The product used is subject to the following "Limited warranty and Disclaimer" and "Compliance Requirements".
Read and accept them before using the product.

Limited warranty and Disclaimer

1. The warranty period of the product is 1 year in service or 1.5 years after the product is delivered.*2)
Also, the product may have specified durability, running distance or replacement parts. Please consult your nearest sales branch.
2. For any failure or damage reported within the warranty period which is clearly our responsibility, a replacement product or necessary parts will be provided.
This limited warranty applies only to our product independently, and not to any other damage incurred due to the failure of the product.
3. Prior to using SMC products, please read and understand the warranty terms and disclaimers noted in the specified catalog for the particular products.

***2) Vacuum pads are excluded from this 1 year warranty.**
A vacuum pad is a consumable part, so it is warranted for a year after it is delivered.
Also, even within the warranty period, the wear of a product due to the use of the vacuum pad or failure due to the deterioration of rubber material are not covered by the limited warranty.

Compliance Requirements

1. The use of SMC products with production equipment for the manufacture of weapons of mass destruction (WMD) or any other weapon is strictly prohibited.
2. The exports of SMC products or technology from one country to another are governed by the relevant security laws and regulations of the countries involved in the transaction. Prior to the shipment of a SMC product to another country, assure that all local rules governing that export are known and followed.

⚠ Safety Instructions	Be sure to read "Handling Precautions for SMC Products" (M-E03-3) before using.

Global Manufacturing, Distribution and Service Network

Worldwide Subsidiaries

North & South America

- U.S.A. **SMC Corporation of America**
- CANADA **SMC Pneumatics (Canada) Ltd.**
- MEXICO **SMC Corporation(México), S.A. de C.V.**
- BRAZIL **SMC Pneumãticos do Brasil Ltda.**
- CHILE **SMC Pneumatics (Chile) S.A.**
- COLOMBIA **SMC Colombia Sucursal de SMC Chile S.A.**
- ARGENTINA **SMC Argentina S.A.**
- BOLIVIA **SMC Pneumatics Bolivia S.r.l.**
- VENEZUELA **SMC Neumatica Venezuela S.A.**
- PERU (Distributor) **IMPECO Automatización Industrial S.A.C.**
- ECUADOR (Distributor) **ASSISTECH CIA. LTDA.**

Asia/Oceania

- CHINA **SMC(China)Co.,Ltd.**
- CHINA **SMC Pneumatics (Guangzhou) Ltd.**
- HONG KONG **SMC Pneumatics(Hong Kong)Ltd.**
- TAIWAN **SMC Pneumatics(Taiwan)Co.,Ltd.**
- KOREA **SMC Pneumatics Korea Co., Ltd.**
- SINGAPORE **SMC Pneumatics(S.E.A.)Pte.Ltd.**
- MALAYSIA **SMC Pneumatics(S.E.A.)Sdn.Bhd.**
- THAILAND **SMC (Thailand) Ltd.**
- PHILIPPINES **Shoketsu SMC Corporation**
- INDIA **SMC Pneumatics(India)Pvt.Ltd.**
- ISRAEL (Distributor) **Baccara Geva A.C.S. Ltd.**
- INDONESIA (Distributor) **PT. Sinar Mutiara Cemerlang**
- VIETNAM (Distributor) **Dy Dan Trading Co.,Ltd.**
- PAKISTAN (Distributor) **Jubilee Corporation**

Asia/Oceania

- SRI LANKA (Distributor) **Electro-Serv(Pvt.)Ltd.**
- IRAN (Distributor) **Abzarchian Co. Ltd.**
- U.A.E. (Distributor) **Machinery People Trading Co. L.L.C.**
- KUWAIT (Distributor) **Esco Kuwait Equip & Petroleum App. Est.**
- SAUDI ARABIA (Distributor) **Assaggaff Trading Est.**
- BAHRAIN (Distributor) **Mohammed Jalal & Sons W.L.L. Technical & Automative Services**
- SYRIA (Distributor) **Miak Corporation**
- JORDAN (Distributor) **Atafawok Trading Est.**
- BANGLADESH (Distributor) **Chemie International**
- AUSTRALIA **SMC Pneumatics(Australia)Pty.Ltd.**
- NEW ZEALAND **SMC Pneumatics(N.Z.)Ltd.**
- JAPAN **SMC Corporation**

Europe/Africa

- GERMANY **SMC Pneumatik GmbH**
- SWITZERLAND **SMC Pneumatik AG**
- U.K. **SMC Pneumatics (U.K.) Ltd.**
- FRANCE **SMC Pneumatique SA**
- SPAIN / PORTUGAL **SMC España S.A.**
- ITALY **SMC Italia S.p.A.**
- GREECE **SMC HELLAS E.P.E**
- IRELAND **SMC Pneumatics (Ireland) Ltd.**
- NETHERLANDS (Associated company) **SMC Pneumatics BV**
- BELGIUM (Associated company) **SMC Pneumatics N.V./S.A.**
- DENMARK **SMC Pneumatik A/S**
- AUSTRIA **SMC Pneumatik GmbH (Austria)**

Europe/Africa

- CZECH REPUBLIC **SMC Industrial Automation CZ s.r.o.**
- HUNGARY **SMC Hungary Ipari Automatizálási Kft.**
- POLAND **SMC Industrial Automation Polska Sp. z o.o.**
- SLOVAKIA **SMC Priemyselná Automatizácia Spol s.r.o.**
- SLOVENIA **SMC Industrijska Avtomatika d.o.o.**
- BULGARIA **SMC Industrial Automation Bulgaria EOOD**
- CROATIA **SMC Industrijska Automatika d.o.o.**
- BOSNIA AND HERZEGOVINA(Distributor) **A.M. Pneumatik d.o.o.**
- SERBIA(Distributor) **Best Pneumatics d.o.o.**
- UKRAINE(Distributor) **PNEUMOTEC Corp.**
- FINLAND **SMC Pneumatics Finland Oy**
- NORWAY **SMC Pneumatics Norway AS**
- SWEDEN **SMC Pneumatics Sweden AB**
- ESTONIA **SMC Pneumatics Estonia Oü**
- LATVIA **SMC Pneumatics Latvia SIA**
- LITHUANIA(LIETUVA) **UAB "SMC Pneumatics"**
- ROMANIA **SMC Romania S.r.l.**
- RUSSIA **SMC Pneumatik LLC.**
- KAZAKHSTAN **SMC Kazakhstan, LLC.**
- TURKEY (Distributor) **Entek Pnömatik Sanayi ve. Ticaret Şirketi**
- MOROCCO (Distributor) **Soraflex**
- TUNISIA (Distributor) **Byms**
- EGYPT (Distributor) **Saadani Trading & Industrial Services**
- NIGERIA (Distributor) **Faraday Engineering Company Ltd.**
- SOUTH AFRICA (Distributor) **Hyflo Southern Africa (Pty.) Ltd.**

U.S. & Canadian Sales Offices

WEST

- Austin
- Dallas
- Los Angeles
- Phoenix
- Portland
- San Francisco
- Vancouver

CENTRAL

- Chicago
- Cincinnati
- Cleveland
- Detroit
- Indianapolis
- Milwaukee
- Minneapolis
- St. Louis
- Toronto
- Windsor

EAST

- Atlanta
- Birmingham
- Boston
- Charlotte
- Nashville
- New Jersey
- Richmond
- Rochester
- Tampa
- Montreal

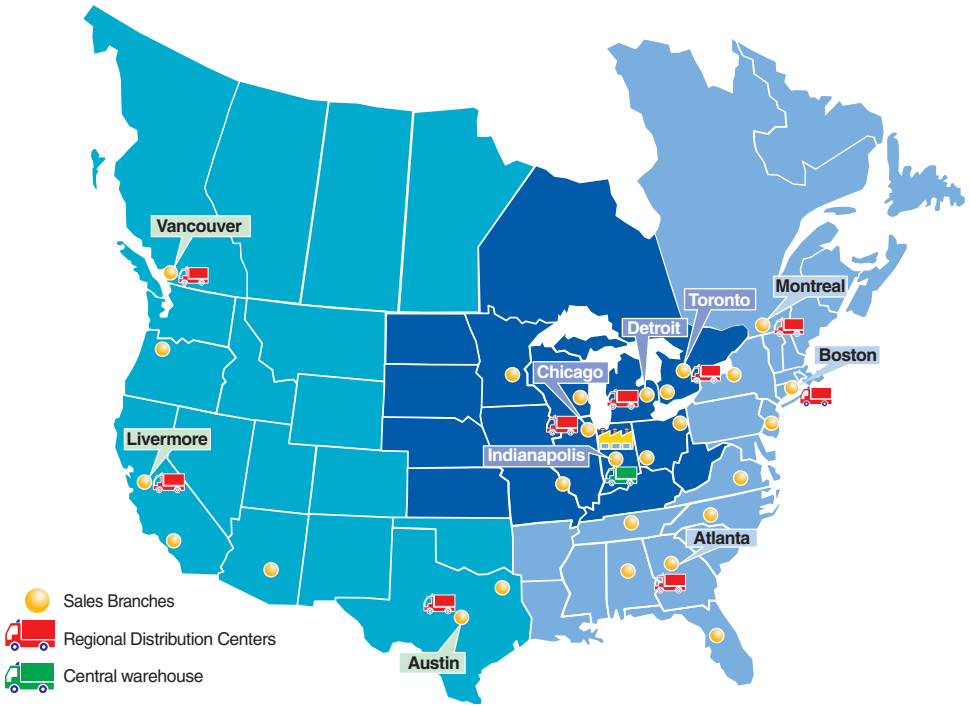

SMC Corporation of America
10100 SMC Blvd., Noblesville, IN 46060
www.smcusa.com
SMC Pneumatics (Canada) Ltd.
www.smcpneumatics.ca

(800) SMC.SMC1 (762-7621)
e-mail: sales@smcusa.com
For International inquiries: www.smcworld.com

© 2012 SMC Corporation of America, All Rights Reserved.

QQ-00M-00

All reasonable efforts to ensure the accuracy of the information detailed in this catalog were made at the time of publishing. However, SMC can in no way warrant the information herein contained as specifications are subject to change without notice.