Doc. no.IS*-OMO0044

Operation Manual

PRODUCT NAME

PRESSURE SWITCH

MODEL / Series / Product Number

IS10 Series
IS10E Series
IS10M Series

SMC Corporation

Contents

	PAGE
1. PRECAUTIONS FOR SAFETY	2~3
2. SPECIFIC PRODUCT PRECAUTIONS	4~6
3. APPLICATION	7
4. SPECIFICATIONS	7
5. SWITCH CHARCTERISTICE	7
6. ELRCTRICAL CIRCUIT	7
7. OPERATING PRESSURE RANGE	7
8. HOW TO ORDER	8~10
9. TROUBLE SHOOTING	11~12
10. HOW TO REPLACE	13~14
11. CONSTRUCTION	15
12. DIMENSIONS	16~23

PRESSURE SWITCH
Safety Instructions

These safety instructions are intended to prevent hazardous situations and/or equipment damage.
These instructions indicate the level of potential hazard with the labels of "Caution," "Warning" or "Danger." They are all important notes for safety and must be followed in addition to International Standards (ISO/IEC)*1) , and other safety regulations.

*1) ISO 4414: Pneumatic fluid power -- General rules relating to systems
ISO 4413: Hydraulic fluid power -- General rules relating to systems
IEC 60204-1: Safety of machinery -- Electrical equipment of machines (Part 1: General requirements)
ISO 10218-1: Manipulating industrial robots -Safety.
etc.

⚠ **Caution**	**Caution** indicates a hazard with a low level of risk which, if not avoided, could result in minor or moderate injury.
⚠ **Warning**	**Warning** indicates a hazard with a medium level of risk which, if not avoided, could result in death or serious injury.
⚠ **Danger**	**Danger** indicates a hazard with a high level of risk which, if not avoided, will result in death or serious injury.

⚠ Warning

1. The compatibility of the product is the responsibility of the person who designs the equipment or decides its specifications.

Since the product specified here is used under various operating conditions, its compatibility with specific equipment must be decided by the person who designs the equipment or decides its specifications based on necessary analysis and test results.

The expected performance and safety assurance of the equipment will be the responsibility of the person who has determined its compatibility with the product.

This person should also continuously review all specifications of the product referring to its latest catalog information, with a view to giving due consideration to any possibility of equipment failure when configuring the equipment.

2. Only personnel with appropriate training should operate machinery and equipment.

The product specified here may become unsafe if handled incorrectly.

The assembly, operation and maintenance of machines or equipment including our products must be performed by an operator who is appropriately trained and experienced.

3. Do not service or attempt to remove product and machinery/equipment until safety is confirmed.

1.The inspection and maintenance of machinery/equipment should only be performed after measures to prevent falling or runaway of the driven objects have been confirmed.

2.When the product is to be removed, confirm that the safety measures as mentioned above are implemented and the power from any appropriate source is cut, and read and understand the specific product precautions of all relevant products carefully.

3. Before machinery/equipment is restarted, take measures to prevent unexpected operation and malfunction.

4. Contact SMC beforehand and take special consideration of safety measures if the product is to be used in any of the following conditions.

1. Conditions and environments outside of the given specifications, or use outdoors or in a place exposed to direct sunlight.
2. Installation on equipment in conjunction with atomic energy, railways, air navigation, space, shipping, vehicles, military, medical treatment, combustion and recreation, or equipment in contact with food and beverages, emergency stop circuits, clutch and brake circuits in press applications, safety equipment or other applications unsuitable for the standard specifications described in the product catalog.
3. An application which could have negative effects on people, property, or animals requiring special safety analysis.
4. Use in an interlock circuit, which requires the provision of double interlock for possible failure by using a mechanical protective function, and periodical checks to confirm proper operation.



PRESSURE SWITCH
Safety Instructions

⚠ Caution

1.The product is provided for use in manufacturing industries.
The product herein described is basically provided for peaceful use in manufacturing industries.
If considering using the product in other industries, consult SMC beforehand and exchange specifications or a contract if necessary.
If anything is unclear, contact your nearest sales branch.

Limited warranty and Disclaimer/Compliance Requirements

The product used is subject to the following "Limited warranty and Disclaimer" and "Compliance Requirements".
Read and accept them before using the product.

Limited warranty and Disclaimer

1.The warranty period of the product is 1 year in service or 1.5 years after the product isdelivered.*2)
Also, the product may have specified durability, running distance or replacement parts. Please consult your nearest sales branch.

2. For any failure or damage reported within the warranty period which is clearly our responsibility, a replacement product or necessary parts will be provided.
This limited warranty applies only to our product independently, and not to any other damage incurred due to the failure of the product.

3. Prior to using SMC products, please read and understand the warranty terms and disclaimers noted in the specified catalog for the particular products.

***2) Vacuum pads are excluded from this 1 year warranty.**
A vacuum pad is a consumable part, so it is warranted for a year after it is delivered.
Also, even within the warranty period, the wear of a product due to the use of the vacuum pad or failure due to the deterioration of rubber material are not covered by the limited warranty.

Compliance Requirements

1. **The use of SMC products with production equipment for the manufacture of weapons of mass destruction(WMD) or any other weapon is strictly prohibited.**
2. **The exports of SMC products or technology from one country to another are govemed by the relevant security laws and regulation of the countries involved in the transaction. Prior to the shipment of a SMC product to another country, assure that all local rules goveming that export are known and followed.**

2.Specific Product Precautions(1)

Air source

⚠ Warning

① Operating fluids are either air or inert gas exclusively. Never use liguids.
Never use in an environment where flammable fiuid or gas is used. Since this is not an explosion-proof construction, it may lead to an explosive disaster.

② Do not use with corrosive gas or liquid.
If corrosive gas or liquid is used, the body can be damaged, causing liquid leakage.

③ Do not apply vacuum. If evacuated, the switch absorbs outside air and results in breakage.

④ Use clean air.
Do not use compressed air which contains chemicals, synthetic oils, organic solvents or corrosive gases, etc., as this can cause damage or malfunction.

⑤ If the compressed air contains a lot of condensate, mount an air dryer or an after-cooler in front of the filter. Do not use compressed air containing a lot of condensate, as this can cause operating failure of the pneumatic equipment.

Wiring

⚠ Warning

① Connect load before connecting with power source.
The switch will be instantly damaged if no load is connected.

② Make the wiring length as short as possible.
In the case of induction load or lead wire exceeding 5m long, the following contact protection box should be used. Using the switch without the contact protection box may cause breakage of the switch.

Part No.	Voltage	Lead wire length
CD-P11	100 VAC	Switch side:0.5m
CD-P12	24 VDC	Load side:0.5m

・Internal circuit of contact protection box

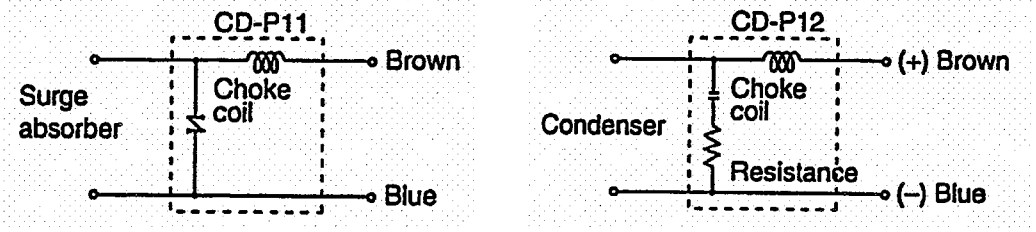

・How to connect contact protection box
Connect the lead wires from the body and the contact protective box side indicated "SWITCH". Lead wire should be as short as short as possible, within 1m.

Lead wire dimensions are as follows.
Enclosure:ϕ3.4
Insulator :ϕ1.1
Conductor:ϕ0.64

③ Check the wiring for possible short circuits.
Avoid defective insulation (crossed lines with other circuit, ground fault, defective insulation between terminals, etc.) with the wiring.
If the insulation is defective, excessive current can flow through the switch, which may cause damage to the switch.

2.Specific Product Precautions(2)

Installation ・ Piping

⚠ Warning

① When changing piping by nand, hold body.
If excessive tensile force is applied to the power supply cable, it can cause operation failure.

② Do not repeatably pull or bend the lead wire.
Repeated pulling or bending of the lead wire may cause of the wires to break.
If the lead wire of a grommet style switch is damaged, the whole switch has to be replaced.

③ Do not drop and bring the product into collision when handling.
Otherwise, damage to the switch can result if it is dropped or hit.

④ Before piping, perform flushing or cleaning of the piping, etc. to remove any cutting chips, cutting oil, solid foreign matter, etc. from the piping.If any of these substances remain in the piping, it can cause malfunction.

⑤ When installing piping or fitting into a port, ensure that sealant matrrial dose not clog up the pressure port. If any of these substances remain in the piping, it can cause malfunction.
When using swalant tape, leave first 1.5 to 2 thread turns exposed a the end of the pipe/fitting

⑥ Apply a wrench to the bottom of the product (IS10-01) or the piping adapter (IS10E) or the spacer (IS10M) when screwing IS10*. If a wrench is applied to the body of the product and rotated, it can cause damage to the body.

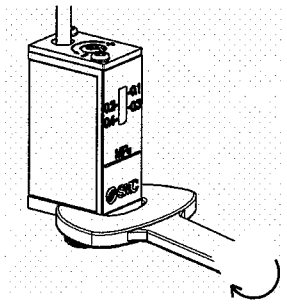

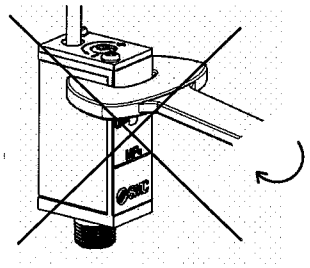

⑦ To screw piping materials into components, tighten with a recommended tightening torque while holding the female thread side. If the minimum tightening torque is not observed, this can cause a looseness and seal failure. On the other hand, excess tightening torque can cause damage to the threads. Furthermore, tightening without holding the female thread side can cause damage due to the excess force that is applied directly to the piping bracket.

Recommended Tightening Torque

Connection thread	1/8	1/4	3/8	1/2	3/4
Torque	7~9	12~14	22~24	28~30	28~30

Modular connection

●AC20~60
For the assembly method to AC20~60, refer to replacement procedures. (P13)

●AC21~61
For the assembly method to AC21~61, refer to replacement procedures. (P14)

⑧ Avoid excessive torsional moment or bending moment other than those caused by the equipment's own weight as this can cause damage. Support external piping separately. Piping materials withoul flexibility such as steel tube piping are prone to be affected by excess moment load and vibration from the piping side. Use flexible tubing in between to avoid such effect

⚠ Caution

① Both of horizontal and vertical mounting are available.

2.Specific Product Precautions(3)

Pressure Source

⚠Warning

① This product uses a reed switch. If the chattering of the output signal is a problem, choose a solid state type pressure switch or adjust by PLC.

Pressure Setting

⚠Warning

① Set within the display pressure range of the scale plate.
If it is set outside of the pressure display range, it may cause operation failure or setting deviation

⚠Caution

① Turn the adjusting screw and place the red line of moving screw in line with the scale of the scale board. Turn clockwise to adjust for high pressure.
② Use flat blade draiver suitable for the head of adjusting screw.
③ Scale of switching set display is the set value at the pressure drop.
④ When detecting ON-pressure signal, note that set pressure on scale plate plus ON-OFF differential (Hysteresis) will be ON-pressure signal.
⑤ Pressure display on the scale plate is just as a reference guide. For an accurate setting, measure it by pressure gauge.

Environment

⚠Warning

① Avoid using a switch in a magnetic environment.
If operated in a magnetic field, the pressure switch may be affected, causing malfunction.
② Do not use in such an environment, where water or oil is splashed. Since it is the open type construction, if water or oil make an ingress into the intemal parts, the electric circuit will be corroded and may result in a malfunction or damage.
③ Avoid vibration. Avoid applying vibration to the product. If vibration is applied, it may cause operation failure or setting deviation.

Maintenance

⚠Warning

① Perform maintenance inspection according to the procedures indicated in the opreation manual.
If handled improperly,malfunction and damage of machinery or equipment may occur.
② Maintenance work
If handled improperly,compressed air can be dangerous.Assembly,handling,repair and element replacement of pneumatic ststems should be performed by a knwledgeble and experienced person.
③ Drain flushing
Remove drainage from air filters regularly.
④ Removal of components,and supply/exhaust of compressed air
When components are removed,first confirm that measures air in place to prevent workpieces from dropping,run-away equipment,etc.Then,cut off the supply pressure and electric power, and exhaust all compressed air from the system using the residual pressure release function.
When machinery is restarted,proceed with caution after confirming that appropriate measures are in place to prevent cylinders from sudden movement.
⑤ Be sure to wear safety goggles for regular maintenance.
⑥ Perform periodical inspections to ensure proper operation of the product.
Safety may not be ensured if unexpected malfunction or wrong operation occurs.
⑦ Use caution when using for an interlock circuit.
When the product is used for an interlock circuit,devise a mnltiple interlock system to prevent trouble or malfunctioning.
Verify the operation of the switch and interlock function on a regular basis.
⑧ Secure the space enough for maintenance.
It may not be possible to perform maintenance checks if there is not enough space.

3.APPLICATION

This product is designed to check the supply pressure of a pneumatic line, and control each each pneumatic line with electric signals.

4.SPECIFICATIONS

MODEL	IS10-01 IS10E-※ IS10M-※	IS10-01-6 IS10E-※-6 IS10M-※-6
Fluid	Air/Inert gas	
Proof pressure	1.0 MPa	
Max.pressure	0.7 MPa	
Operating pressure range	0.1～0.4 MPa	0.1～0.6 MPa
Ambient and fluid temperature	-5 to 60°C(Should be no freezing)	
Contact	1a	
Error of scale	±0.05 MPa or less	
Hysteresis	0.08 MPa or less	
Repeatability	±0.05 MPa or less	
Wiring specifications	Grommet Lead wire length:0.5m Option:3m,5m	
Enclosure	IP40	

5.SWITCH CHARACTERISTICS

Max.contact capacity	AC 2VA,DC 2W		
Voltage	24 VAC/DC or less	48 VAC/DC	100 VAC/DC
Max.operating current	50mA	40mA	20mA

6.ELECTRICAL CIRCUIT

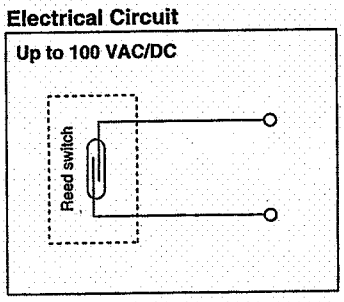

7.OPERATING PRESSURE RANGE

Operating pressure: 0.1 to 0.4 Mpa

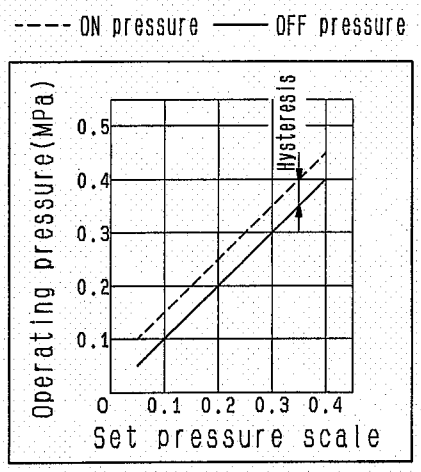

Operating pressure: 0.1 to 0.6 Mpa

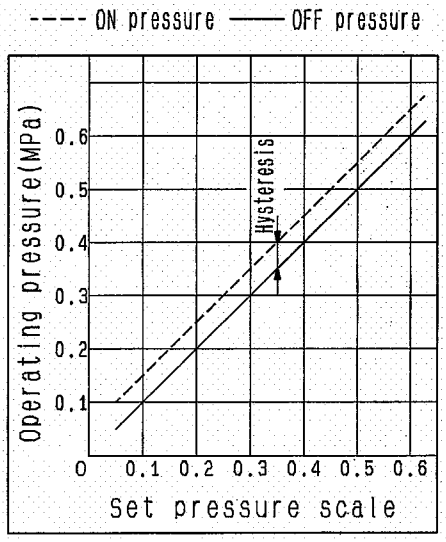

8.HOW TO ORDER(1)

○ IS10-01 Series

I S 1 0 - [ ] [0 1] [ ] - [ ]
① ② ③

Semi-standard:Select one each for **a** to **c**
Semi-standard symbol:When more than one specification is required,indicate in alphaumeric order.
Example) IS10-N01-6PZ

		Symbol	Description
①	Thread type	Nil	Rc
		N	NPT
+			
②	Sealant	Nil	Without sealant
		S	With sealant
+			
③ Semi-standard	a Max.pressure	Nil	0.1～0.4MPa
		6 Note1)	0.1～0.6MPa
	+		
	b Lead wire length	Nil	0.5m
		L	3m
		Z	5m
	+		
	c Pressure display with	Nil	MPa
		P Note2)	MPa･psi

Note 1) Set pressure range of 6P(L, Z) is 0.2 to 0.6MPa (30 to 90psi).
Note 2)This product is for overseas use only according to the new Measuement Law.
(The SI unit type is provided for use in Japan.)

○ AC20～40 Pressure Switch with piping Adapter series

I S 1 0 E - [3 0] [ ] [0 3] – [ ]
① ② ③ ④

Semi-standard:Select one each for **a** to **d**
Semi-standard symbol:When more than one specification is required,indicate in alphaumeric order.
Example) IS10E-30N03-6PRZ

		Code	Content	① Body size 20	30	40
②	Thread type	Nil	Rc	●	●	●
		N Note1)	NPT	●	●	●
		F Note1)	G	●	●	●
+						
③	Port size	01	1/8	●	–	–
		02	1/4	●	●	●
		03	3/8	●	●	●
		04	1/2	-	●	●
		06	3/4	-	–	●
+						
④ Semi-standard	a Max.pressure	Nil	0.1～0.4MPa	●	●	●
		6 Note2)	0.1～0.6MPa	●	●	●
	+					
	b Lead wire length	Nil	0.5m	●	●	●
		L	3m	●	●	●
		Z	5m	●	●	●
	+					
	c Pressure display with scale plate	Nil	MPa	●	●	●
		P Note1)	MPa･psi	●	●	●
	+					
	d Mounting position	Nil	Right	●	●	●
		R	Left	●	●	●

Body size	Applicable model
20	AC20
30	AC25,30
40	AC40-02～04

Note 1) Set pressure range of 6P(L, Z) is 0.2 to 0.6MPa (30 to 90psi).
Note 2)This product is for overseas use only according to the new Measuement Law.
(The SI unit type is provided for use in Japan.)
*A pressure switch can be mounted to AC40-06 or larger by screwing IS10-01 into the piping adapter E500-*06-X501 or E600-*06 to 10-X501 (Rc1/8 thread on top surface). The assembled product is treated as a special product. This should be checked beforehand.
*Prepare a spacer (Y series) separately for modular connection.

8.HOW TO ORDER(2)

○ AC20~60 Spacer Series with Pressure Switch

I S 1 0 M - [3 0] - [ ]
① ②

Semi-standard:Select one each for **a** to **c**
Semi-standard symbol:When more than one specification is required,indicate in alphaumeric order.
Example) IS10M-30-6LP

			Code	Content	① Body size 20	30	40	50	60
② Semi-standard	a	Max.pressure	Nil	0.1~0.4MPa	●	●	●	●	●
			6 Note1)	0.1~0.6MPa	●	●	●	●	●
	+								
	b	Lead wire length	Nil	0.5m	●	●	●	●	●
			L	3m	●	●	●	●	●
			Z	5m	●	●	●	●	●
	+								
	c	Pressure display with scale plate	Nil	MPa	●	●	●	●	●
			P Note2)	MPa・psi	●	●	●	●	●

Body size	Applicable model
20	AC20
30	AC25,30
40	AC40-02~04
50	AC40-06
60	AC50,55,60

Note 1) Set pressure range of 6P(L, Z) is 0.2 to 0.6MPa (30 to 90psi).
Note 2)This product is for overseas use only according to the new Measuement Law.
(The SI unit type is provided for use in Japan.)
*Prepare a spacer (Y series) separately for modular connection.

○ AC21~61 Spacer Series with Pressure Switch

I S 1 0 M - [3][ ] - [ ]
① ② ③

Semi-standard:Select one each for **a** to **c**
Semi-standard symbol:When more than one specification is required,indicate in alphaumeric order.
Example) IS10M-3YT-6LP

			Code	Content	① Body size 20	30	40	50	60
②	Attachments		Nil	No attachment	●	●	●	●	●
			Y	with attachment	●	●	●	●	●
			YL	attachment with L type bracket	●	●	●	●	●
			YT	attachment with T type bracket	●	●	●	●	●
	+								
③ Semi-standard	a	Max.pressure	Nil	0.1~0.4MPa	●	●	●	●	●
			6 Note1)	0.1~0.6MPa	●	●	●	●	●
	+								
	b	Lead wire length	Nil	0.5m	●	●	●	●	●
			L	3m	●	●	●	●	●
			Z	5m	●	●	●	●	●
	+								
	c	Pressure display with scale plate	Nil	MPa	●	●	●	●	●
			P Note2)	MPa・psi	●	●	●	●	●

Body size	Applicable model
20	AC21
30	AC26,31
40	AC41-02~04
50	AC41-06
60	AC51,56,61

Note 1) Set pressure range of 6P(L, Z) is 0.2 to 0.6MPa (30 to 90psi).
Note 2)This product is for overseas use only according to the new Measuement Law.
(The SI unit type is provided for use in Japan.)

* An attachment is enclosed with the product for shipment.
* Part numbers for change of attachment

Model No.	Y type	YL type	YT type
IS10M-2	Y20M	Y20LM	Y20TM
IS10M-3	Y30M	Y30LM	Y30TM
IS10M-4	Y40M	Y40LM	Y40TM
IS10M-5	Y50M	Y50LM	Y50TM
IS10M-6	Y60M	Y60LM	Y60TM

8.HOW TO ORDER(3)

○ AC21～41 Pressure Switch with piping Adapter series

I S 1 0 E - 3 □ 01 □ – □

① ② ③ ④ ⑤

Semi-standard:Select one each for **a** to **d**
Semi-standard symbol:When more than one specification is required,indicate in alphaumeric order.
Example) IS10E-3N03YT-6PRZ

		Code	Content	① Body size 20	30	40
②	Thread type	Nil	Rc	●	●	●
		N Note1)	NPT	●	●	●
		F Note1)	G	●	●	●
③	Port size	01	1/8	●	–	–
		02	1/4	●	●	●
		03	3/8	●	●	●
		04	1/2	–	●	●
		06	3/4	–	–	●
④	Attachments	Nil	No attachment	●	●	●
		Y	with attachment	●	●	●
		YL	attachment with L type bracket	●	●	●
		YT	attachment with T type bracket	●	●	●
⑤ Semi-standard	a Max.pressure	Nil	0.1～0.4MPa	●	●	●
		6 Note2)	0.1～0.6MPa	●	●	●
	b Lead wire length	Nil	0.5m	●	●	●
		L	3m	●	●	●
		Z	5m	●	●	●
	c Pressure display with scale plate	Nil	MPa	●	●	●
		P Note1)	MPa・psi	●	●	●
	d Mounting position	Nil	Right	●	●	●
		R	Left	●	●	●

Body size	Applicable model
20	AC21
30	AC26,31
40	AC41-02～04

Note 1) Set pressure range of 6P(L, Z) is 0.2 to 0.6MPa (30 to 90psi).
Note 2)This product is for overseas use only according to the new Measuement Law.
(The SI unit type is provided for use in Japan.)

* An attachment is enclosed with the product for shipment.
* Part numbers for change of attachment

Model No.	Y type	YL type	YT type
IS10E-20*	Y20E	Y20LE	Y20TE
IS10E-30*	Y30E	Y30LE	Y30TE
IS10E-40*	Y40E	Y40LE	Y40TE

9.TROUBLE SHOOTING(1)

In order to maintain product quality, the pressure switch's parts can not be replaced.
The whole product needs to be replaced with a new one when any failure occurs.

Problem	Cause		Remedy
The product doesn't (sometiems) turn on.	The power supply failure	1. Power supply voltage is out of specification	1. Correct the voltage to specified value.
	Incorrect wiring (contact failure, open circuit)	1. Contact failure of connection (connector, crimped terminal, terminal).	1. Reconnect the wiring. (Check the continuity.)
	Magnetic force reduction	1. There is a magnetic field source (spot welding machine, cable with high current, motor, strong magnet, etc) close to the pressure switch.	1. If the magnetic source cannot be avoided, place a shield plate on the product.
		2. The pressure switch has an abnormally high temperature.	2. Decrease the temperature to 60°C or less.
		3. There is accumulation of iron particles or magnetic substances stuck to the pressure switch.	3-1. Place a protective cover to prevent the iron powder from depositing. 3-2. Keep the magnetic material away or change the material to nonmagnetic one.
	Sensitivity reduction	1. Excessive impact has been applied to the switch.	1. Improve so that impact will not be applied, and then replace the pressure switch with a new one.
	Open circuit at the inside of the product	1. Overcurrent has flowed through the switch.	1. Recheck a curcuit to clarify whether or not there is a factor to cause over current and replace the product.
	Open cirucuit of a lead wire	1. The lead wire has repeatedly been subjected to bending or tensile force.	1-1. Route the wiring to protect the lead wire from tensile force. 1-2. Maximize the bending radius of the lead wire. 1-3. Do not use a spiral tube. 1-4. Connect the lead wire to a robot cable on the way if necessary.
		2. Dents or cracks in the lead wire cover.	2. If a possibility of damage due to external force is found after the lead wire is connected, wrap the lead wire with a protective tube.
	Insufficient supply pressure	1. Supply pressure to the pressure switch is higher than the set pressure.	1. Decrease the set pressure.

9.TROUBLE SHOOTING(2)

Problem	Cause		Remedy
The product doesn't (sometiems) turn off.	Fusioned contact of a reed switch	1. The load conditions are outside of the specification shown in the catalog.	1.2. Review a control circuit and replace the product.
		2. Overcurrent has flowed through the switch.	
		3. A large inrush current has flowed through the switch.	3. Use a cotnact box if necessary.
		4. The number of operation cycles has exceeded 5 million cycles.	4. Replace the pressure switch every 5 million operating cycles as a guideline.
		5. The contact protection box has not been used. The operating conditions require it to be used.	5. Use a contact protective box and replace the product.
	Remaining the product turned on due to external magnetic field.	1. There is a strong magnetic field source around the pressure switch.	1. If the magnetic source cannot be be avoided, place a shield plate on the product.
	Impact	1. Excessive impact has been applied to the pressure switch.	1-1. Reduce the impact or replace with a solid state switch. 1-2. Lower the response speed of PLC.
	Damage of a reed switch	1. Excessive impact has been applied to the switch.	1. Improve so that impact will not be applied, and then replace the pressure switch with a new one.
		2. The switch is operated in an environment exposed to organic solvent.	2-1. Place a protective cover to avoid the splash of the organic solvent and replace the product. 2-2. Select more suitable product.
	Pressure supply	1. Pressure is not supplied to the pressure switch.	1. Increase the set pressure.
Air leaks.	1. Foreign matter is caught in the piston seal.		1. Remove the foreign matter from from inside the piping, and then replace the pressure switch with a new one.

10.HOW TO REPLACE(1)

AC20～60

⚠ Warning

Be sure to confirm that there is no pressure in the product before replacing the product.
Be sure to rotate the handle of the regulator fully counterclockwise to decrease the set pressure to zero before replacement.
After replacement, ensure that the product satisfies all required functions and doesn't have any external leakage before operation.

Process	Procedure	Necessary tools	Notes
Disassembly	1. Remove connected tubes and fittings from the product if necessary.	-	-
	2. Loosen hexagonal socket head bolts. Insert a hexagonal wrench into the hexagonal socket of the bolt and rotate counterclockwise until the bolt reaches a position in which the stopper is engaged.	Hexagonal wrench (Nominal) AC20 :2.5 AC25,30 :3 AC40,40-06:4 AC50,55,60 :5	-
	3. Hold the removed product by hand so as not to drop it.	-	-
	4. Bend the lever pin down and bring the retainer up.	-	-
	5. Take out the product.	-	-
Assembly	6. Mount a spacer on the product. Match the engaging groove (concave) with the mating groove (convex) on the spacer, taking care not to mix up the positions of IN and OUT on the product.	-	-
	7. Holding the product by hand, press the the retainer down and bring the lever pin up so that it can be hung on the retainer.	-	-
	8. Tighten hexagon socket head bolts. Insert a hexagonal wrench into the hexagonal socket of the bolt and rotate it clockwise to tighten the bolt. Refer to the notes at right for the appropriate tightening torque.	Hexagonal wrench (Nominal) AC20 :2.5 AC25,30 :3 AC40,40-06:4 AC50,55,60 :5	Tightening torque AC20 :0.6±0.1N・m AC25,30 :1.5±0.1N・m AC40,40-06:3.0±0.1N・m AC50,55,60 :5.0±0.1N・m

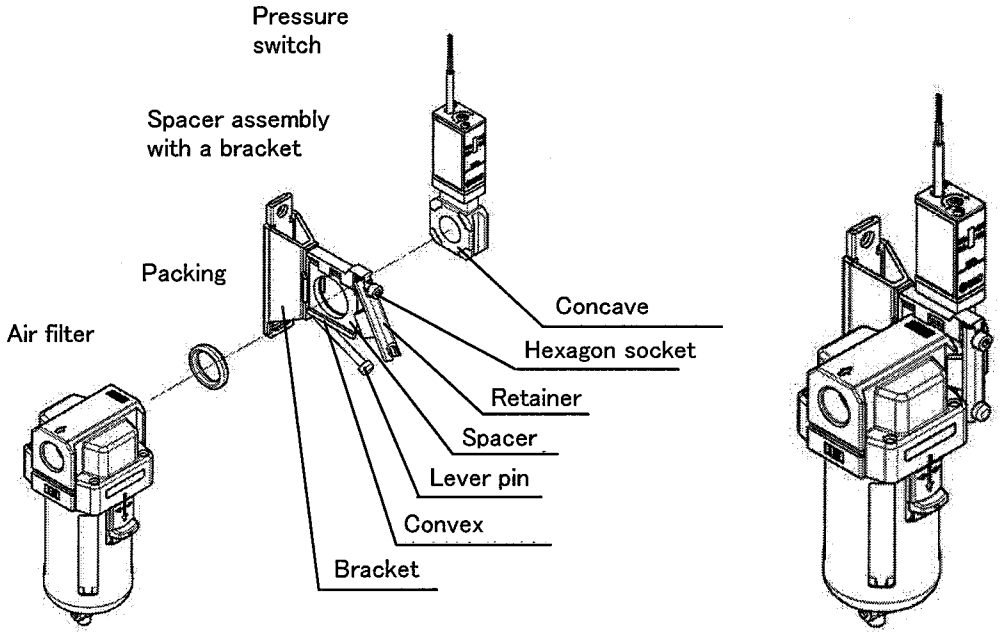

10.HOW TO REPLACE(2)

AC21～61

⚠ Warning

Be sure to confirm that there is no pressure in the product before replacing the product.
Be sure to rotate the handle of the regulator fully counterclockwise to decrease the set pressure to zero before replacement.
After replacement, ensure that the product satisfies all required functions and doesn't have any external leakage before operation.

Process	Procedure	Necessary tools	Notes
Disassembly	1. Remove connected tubes and fittings from the product if necessary.	-	-
	2. Hold the removed product by hand so as not to drop it.	-	-
	3. Loosen hexagonal socket head bolts. Insert a hexagonal wrench into the hexagonal socket of the bolt and rotate counterclockwise until the bolt reaches a position in which the stopper is engaged. (AC21 has a cross recessed countersunk head screw.)	Hexagonal wrench (Nominal) and	-
	4. Take out the product.	-	-
Assembly	5. Mount a spacer on the product. Match the engaging groove (concave A) with the mating groove (convex A) on the spacer, taking care not to mix up the positions of IN and OUT on the product.	-	-
	6. Mount a retainer on the product. Match the engaging groove (concave B) with the mating groove (convex B) on the retainer.	-	-
	7. Tighten hexagon socket head bolts. Insert a hexagonal wrench into the hexagonal socket of the bolt and rotate it clockwise to tighten the bolt. Refer to the notes at right for the appropriate tightening torque.	Hexagonal wrench (Nominal) and	Tightening torque AC21 :1.4N·m AC26,31 :2.9N·m AC41,41-06:4.9N·m AC51,56,61 :4.9N·m

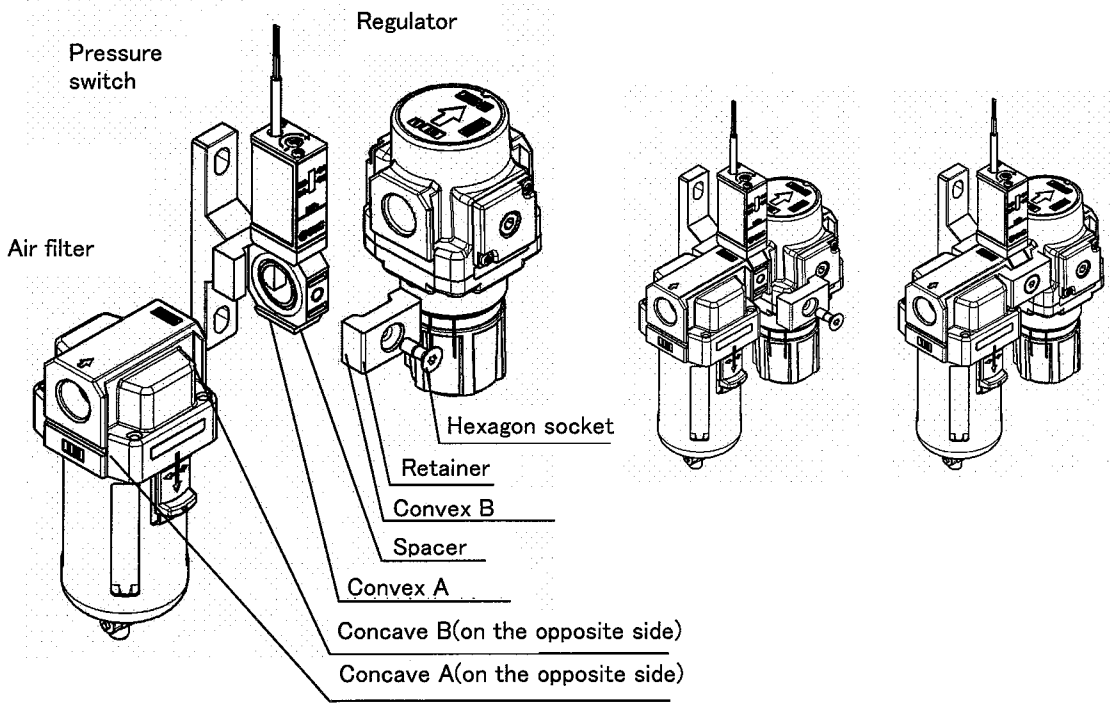

11.CONSTRUCTION

IS10

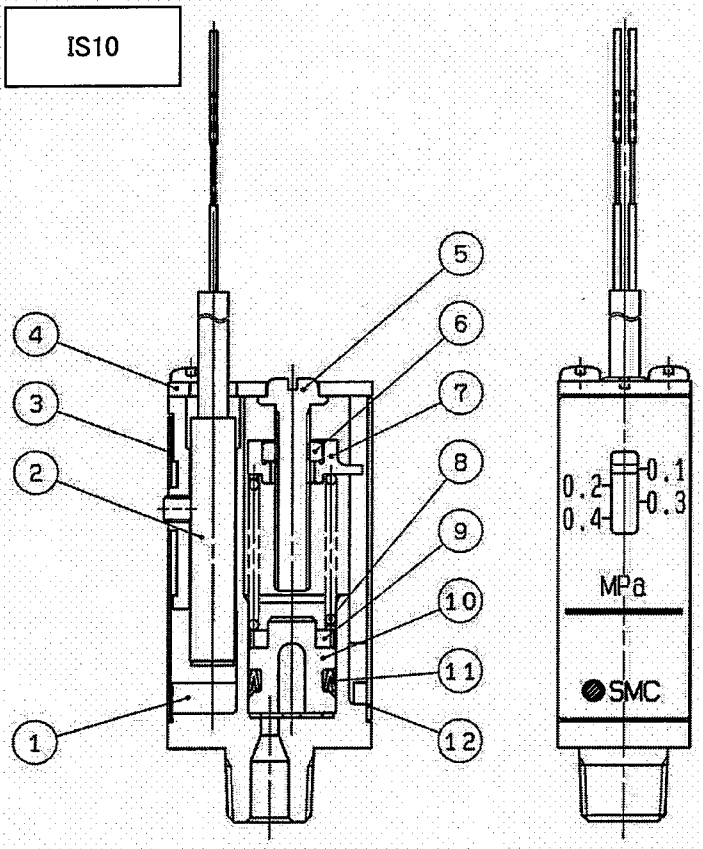

Parts list

NO.	Description	Material
1	Body	Zinc die casting
2	Switch assembly	-
3	Shield plate	Rolled steel plate
4	Cover	Steel plate
5	Adjusting screw	Brass
6	Nut	Brass
7	Transferring screw	PBT
8	Spring	Stainless steel
9	Magnet	-
10	Piston	Polyacetal
11	Packing	NBR
12	Scale plate	Polycarbonate

Content of scale plate display

Standard	-6	-4P	-6P
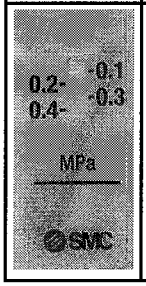	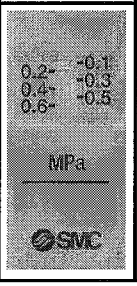	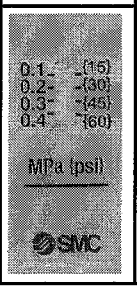	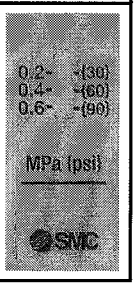

IS10E

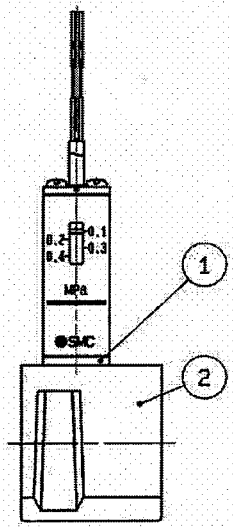

IS10M

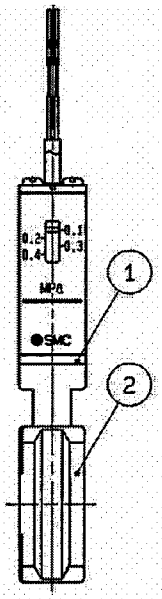

Model no.	①Body	② Piping adapter
IS10E-200※	ZDC	ZDC
IS10E-300※	ZDC	ADC
IS10E-400※	ZDC	ADC

Model no.	①Body	② Piping adapter
IS10E-20※	ZDC	ZDC
IS10E-30※	ZDC	ADC
IS10E-40※	ZDC	ADC

Model no.	①Body	②Spacer
IS10M-20	ZDC	ZDC
IS10M-30	ZDC	ZDC
IS10M-40	ZDC	ADC
IS10M-50	ZDC	ADC
IS10M-60	ZDC	ADC

Model no.	①Body	②Spacer
IS10M-2	ZDC	ZDC
IS10M-3	ZDC	ZDC
IS10M-4	ZDC	ZDC
IS10M-5	ZDC	ADC
IS10M-6	ZDC	ADC

12.DIMENSIONS(1)

IS10

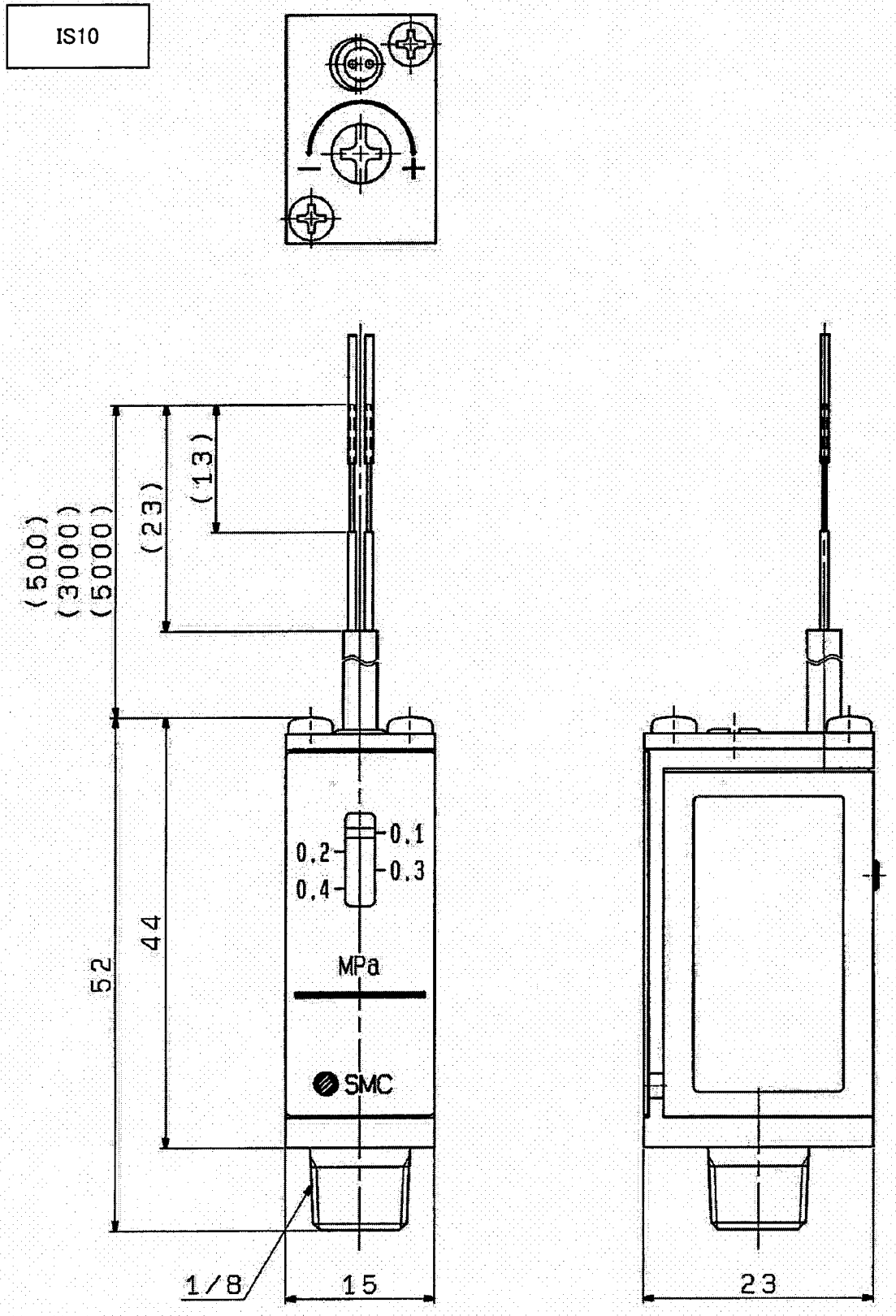

12.DIMENSIONS(2)

IS10E-※00※

IS10M-※0

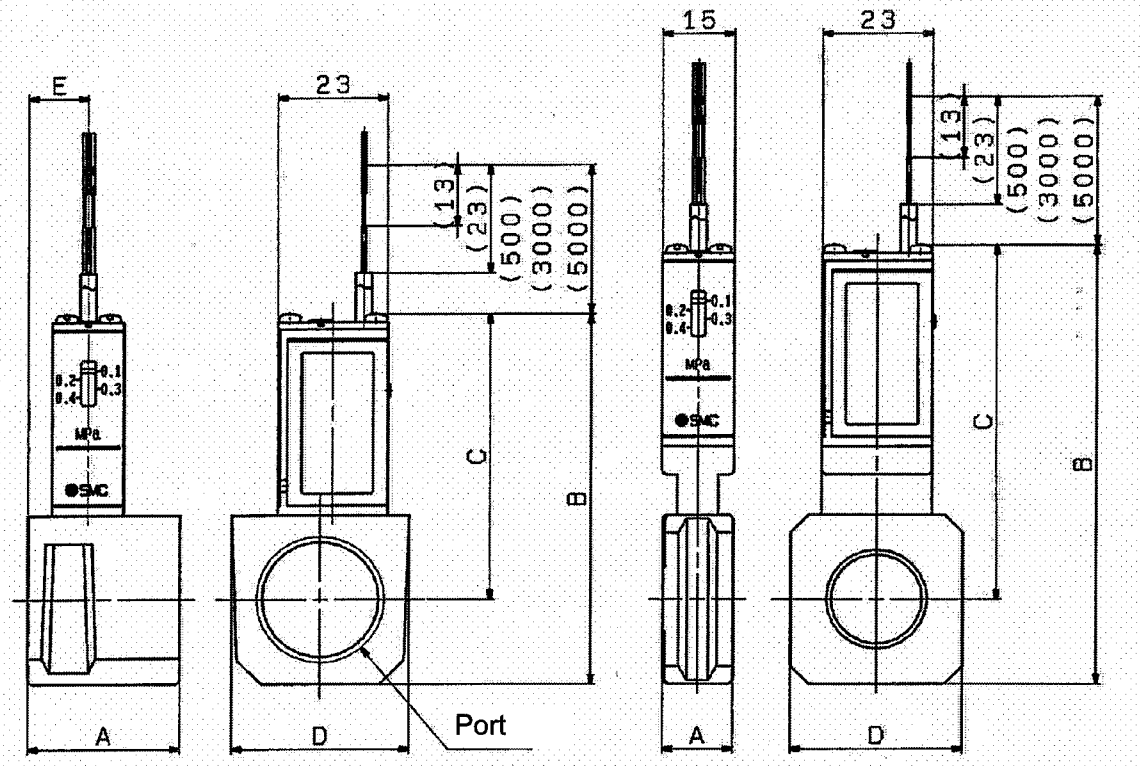

Model no.	Port size	A	B	C	D	E	Applicable model
IS10E-2001	1/8	30	66	55	28	16	AC20□ AR20□・AW20□ AWM20・AWD20
IS10E-2002	1/4						
IS10E-2003	3/8						
IS10E-3002	1/4	32	73	59	30	13	AC25□・AC30□ AR25□・AR30□・AW30□ AWM30・AWD30
IS10E-3003	3/8						
IS10E-3004	1/2						
IS10E-4002	1/4	32	79	61	37	13	Note1) AC40□ AR40□・AW40□ AWM40・AWD40
IS10E-4003	3/8						
IS10E-4004	1/2						
IS10E-4006	3/4						

Note 1: Cannot be mounted to AC40□-06,AR40□-06 and AW,AWM,AWD40□-06.

Model no.	A	B	C	D	Applicable model
IS10M-20	11	74	64	28	AC20□
IS10M-30	13	85	71	30	AC25□・AC30□
IS10M-40	15	93	75	36	AC40□
IS10M-50	17	97	77	44	AC40□-06
IS10M-60	22	91	67	53	AC50□・AC55□・AC60□

12.DIMENSIONS(3)

IS10E-※0※

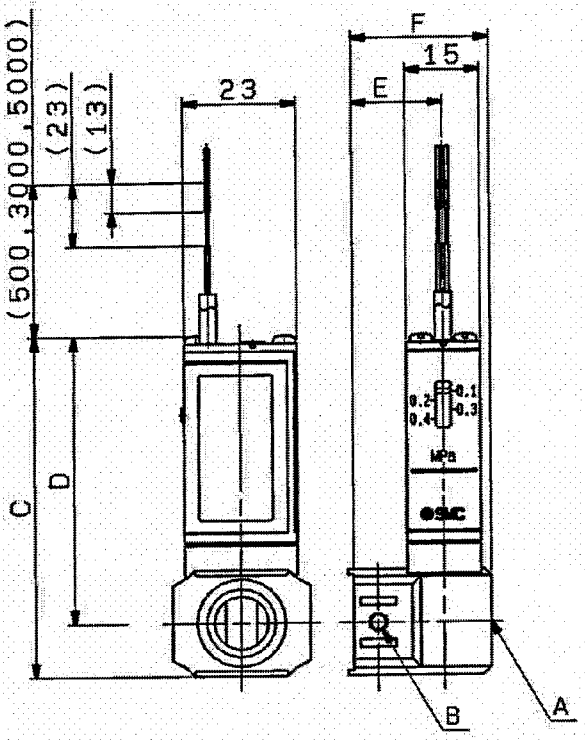

IS10M-※

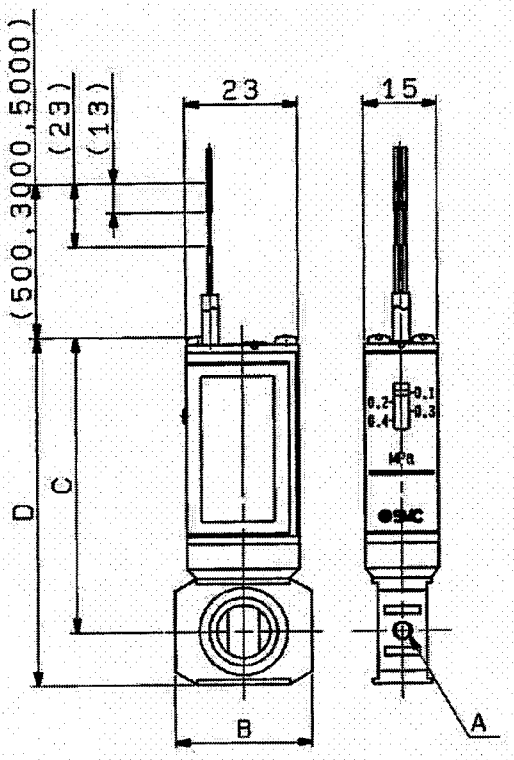

IS10E-※0※

MODEL NO.	A	B	C	D	E	F
IS10E-2(F,N)01	1/8	2-M4x0.7	70	59	18.5	28
IS10E-2(F,N)02	1/4					
IS10E-2(F,N)03	3/8					
IS10E-3(F,N)02	1/4	2-M5x0.8	77	60	16.5	26
IS10E-3(F,N)03	3/8					
IS10E-3(F,N)04	1/2		77	60	17.5	40
IS10E-4(F,N)02	1/4	2-M6x1	85	64	17.5	33
IS10E-4(F,N)03	3/8					
IS10E-4(F,N)04	1/2					
IS10E-4(F,N)06	3/4		85	64	17.5	50

IS10M-※

MODEL NO.	A	B	C	D
IS10M-2	2-M4x0.7	28	61	72
IS10M-3	2-M5x0.8	29	63	80
IS10M-4	2-M6x1	35	66	87
IS10M-5	2-M6x1	44	66	89
IS10M-6	4-M6x1	54	70	98

12.DIMENSIONS(4)

IS10E-※0※Y

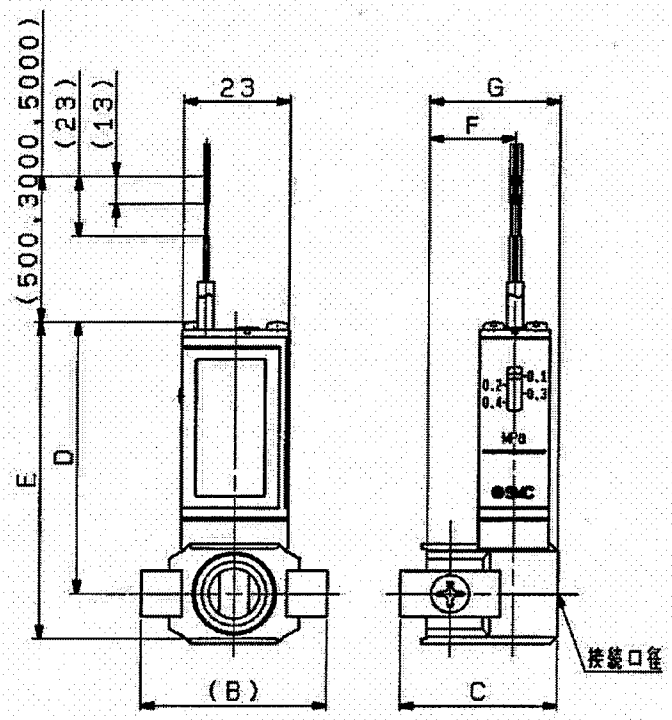

IS10M-※Y

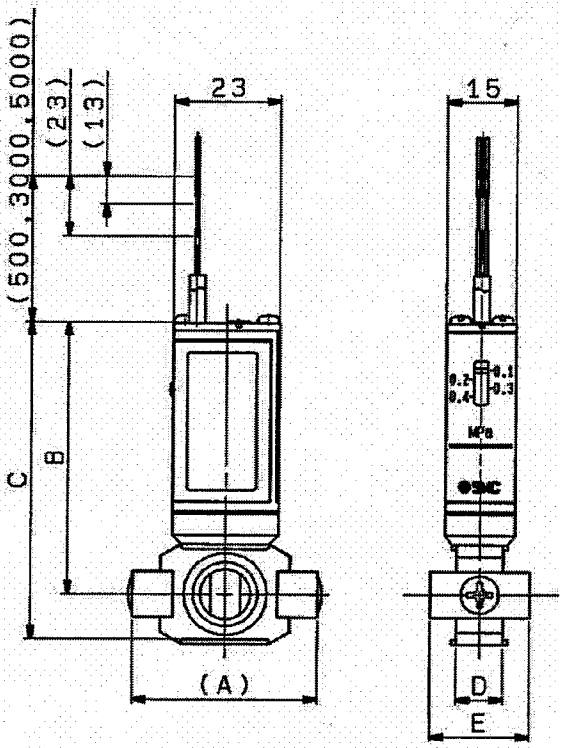

IS10E-※0※Y

MODEL NO.	A	B	C	D	E	F	G
IS10E-2(F,N)01Y	1/8	40	33.7	59	70	18.5	28
IS10E-2(F,N)02Y	1/4						
IS10E-2(F,N)03Y	3/8						
IS10E-3(F,N)02Y	1/4	46	35.3	60	77	16.5	26
IS10E-3(F,N)03Y	3/8						
IS10E-3(F,N)04Y	1/2	46	49.3	60	77	17.5	40
IS10E-4(F,N)02Y	1/4	53	50	64	85	17.5	33
IS10E-4(F,N)03Y	3/8						
IS10E-4(F,N)04Y	1/2						
IS10E-4(F,N)06Y	3/4	53	67	64	85	17.5	50

IS10M-※Y

MODEL NO.	A	B	C	D	E
IS10M-2Y	40	61	72	10	21.4
IS10M-3Y	47	63	80	11	29.5
IS10M-4Y	53	66	87	14	48
IS10M-5Y	62	66	89	55	14
IS10M-6Y	74	70	98	57	15

12.DIMENSIONS(5)

IS10E-※0※YL

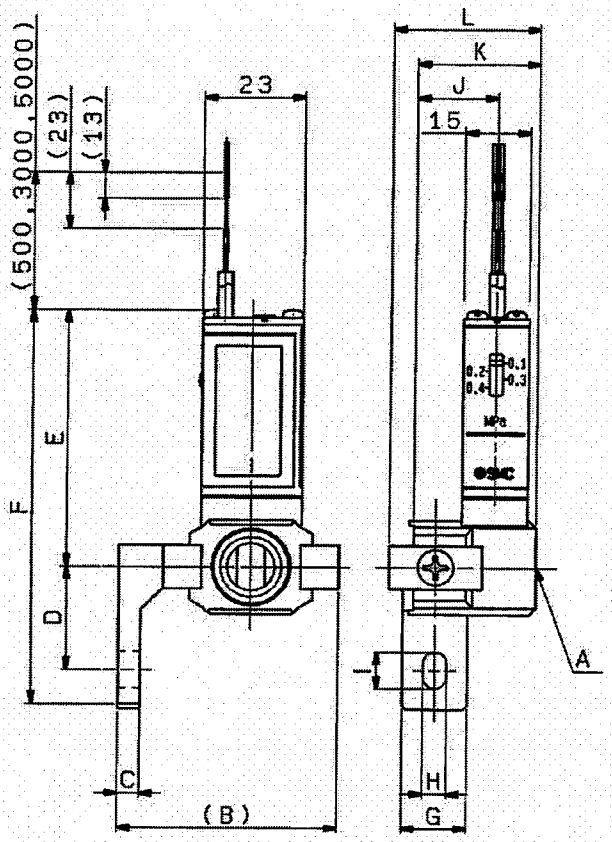

IS10E-※0※YL

MODEL NO.	A	B	C	D	E	F	G	H	I	J	K	L
IS10E-2(F,N)01YL	1/8	50	5	24	59	92	15	5.5	8.5	18.5	28	33.7
IS10E-2(F,N)02YL	1/4											
IS10E-2(F,N)03YL	3/8											
IS10E-3(F,N)02YL	1/4	64	7	35	60	105	16	7	11	16.5	26	35.3
IS10E-3(F,N)03YL	3/8											
IS10E-3(F,N)04YL	1/2	64	7	35	60	105	16	7	11	17.5	40	49.3
IS10E-4(F,N)02YL	1/4	76	7	40	64	114	22	9	13	17.5	33	50
IS10E-4(F,N)03YL	3/8											
IS10E-4(F,N)04YL	1/2											
IS10E-4(F,N)06YL	3/4	76	7	40	64	114	22	9	13	17.5	50	67

12.DIMENSIONS(6)

IS10E-※0※YT

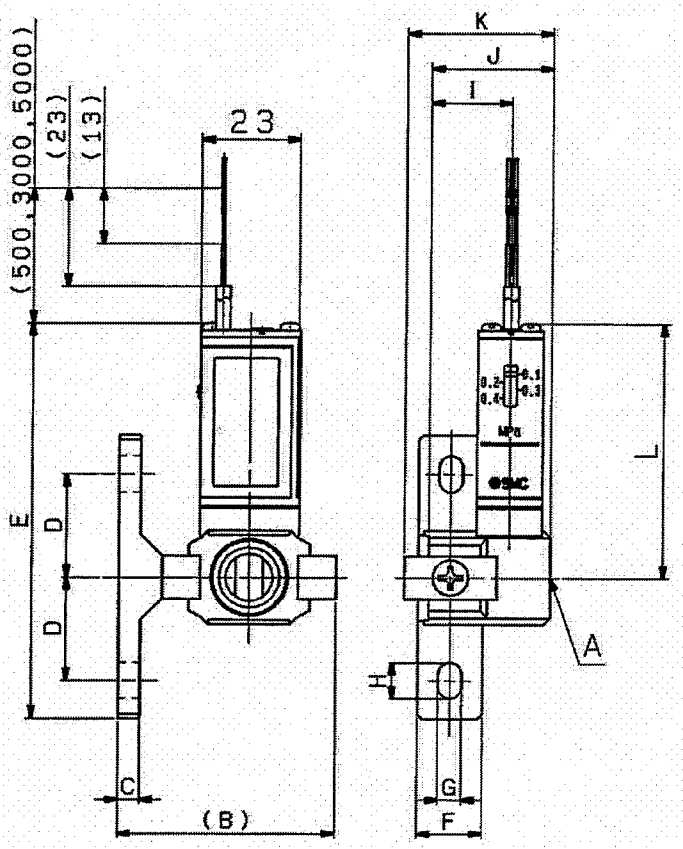

IS10E-※0※YT

MODEL NO.	A	B	C	D	E	F	G	H	I	J	K	L
IS10E-2(F,N)01YT	1/8	50	5	24	92	15	5.5	8.5	18.5	28	33.7	59
IS10E-2(F,N)02YT	1/4											
IS10E-2(F,N)03YT	3/8											
IS10E-3(F,N)02YT	1/4	64	7	35	105	16	7	11	16.5	26	35.3	60
IS10E-3(F,N)03YT	3/8											
IS10E-3(F,N)04YT	1/2	64	7	35	105	16	7	11	17.5	40	49.3	60
IS10E-4(F,N)02YT	1/4	76	7	40	114	22	9	13	17.5	33	50	64
IS10E-4(F,N)03YT	3/8											
IS10E-4(F,N)04YT	1/2											
IS10E-4(F,N)06YT	3/4	76	7	40	114	22	9	13	17.5	50	67	64

12.DIMENSIONS(7)

IS10M-2,3,4YL

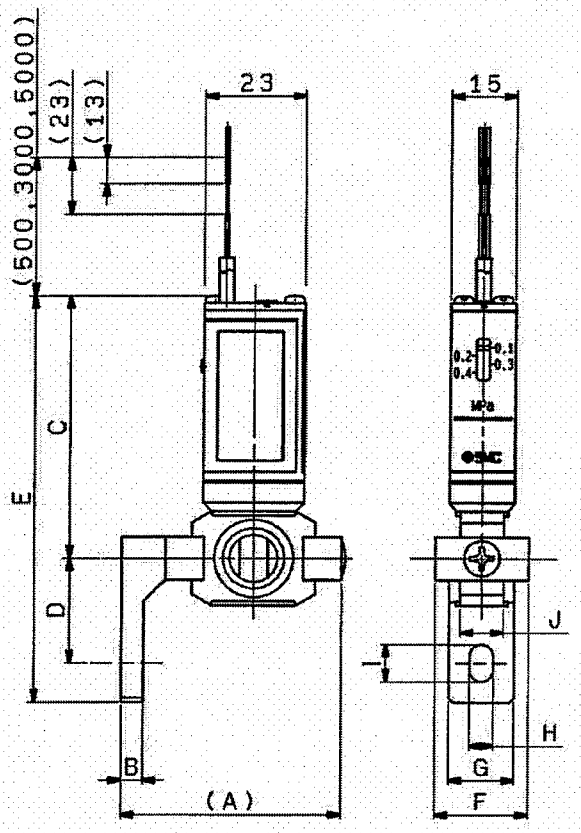

IS10M-5,6YL

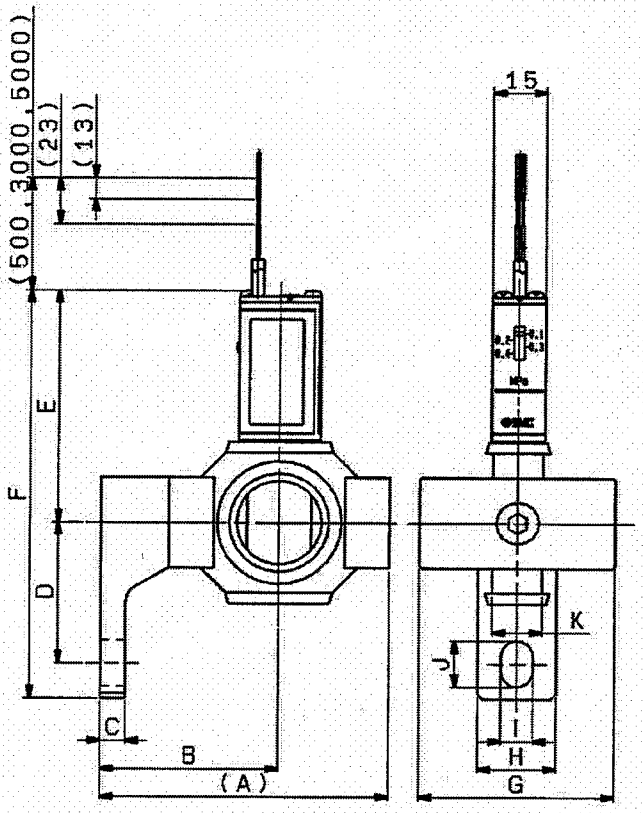

IS10M-2,3,4YL

MODEL NO.	A	B	C	D	E	F	G	H	I	J
IS10M-2YL	50	5	61	24	94	21.4	15	5.5	8.5	10
IS10M-3YL	64	7	63	35	108	29.5	16	7	11	11
IS10M-4YL	76	7	66	40	116	48	22	9	13	14

IS10M-5,6YL

MODEL NO.	A	B	C	D	E	F	G	H	I	J	K
IS10M-5YL	81	50	7	40	66	116	55	22	9	13	14
IS10M-6YL	107	70	10	50	70	133	57	24	12	16	15

12.DIMENSIONS(8)

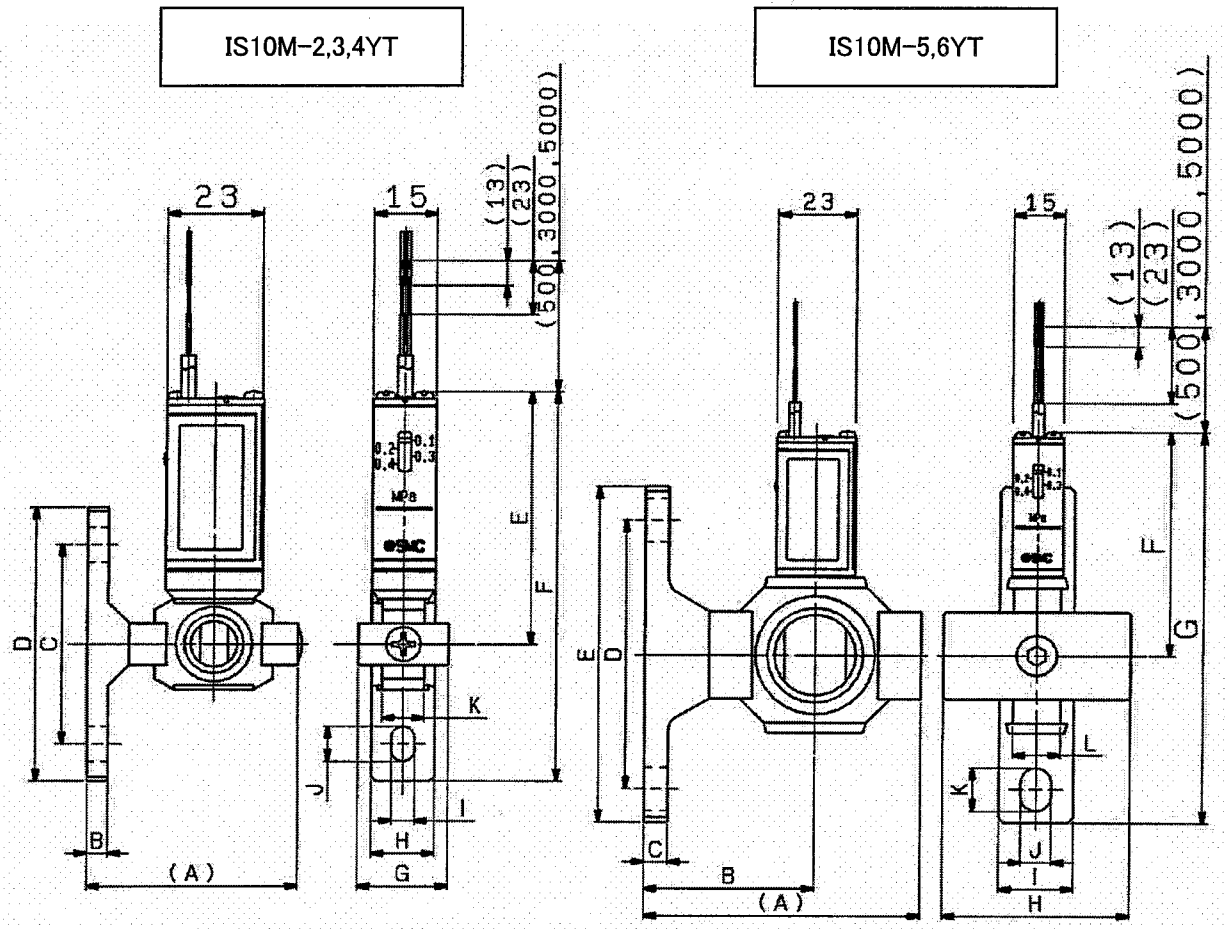

IS10M-2,3,4YT

MODEL NO.	A	B	C	D	E	F	G	H	I	J	K
IS10M-2YT	50	5	48	66	61	94	21.4	15	5.5	8.5	10
IS10M-3YT	64	7	70	90	63	108	29.5	16	7	11	11
IS10M-4YT	76	7	80	100	66	116	48	22	9	13	14

IS10M-5,6YT

MODEL NO.	A	B	C	D	E	F	G	H	I	J	K	L
IS10M-5YT	81	50	7	80	100	66	116	55	22	9	13	14
IS10M-6YT	107	70	10	100	125	70	133	57	24	12	16	15

Revision history

SMC Corporation

4-14-1, Sotokanda, Chiyoda-ku, Tokyo 101-0021 JAPAN
Tel: + 81 3 5207 8249 Fax: +81 3 5298 5362
URL http://www.smcworld.com

Note: Specifications are subject to change without prior notice and any obligation on the part of the manufacturer.
© 2008 SMC Corporation All Rights Reserved