In-line Air Filter

RoHS

Operating pressure range −100 kPa to 1.0 MPa (20°C)

Both positive pressure and vacuum pressure can be used with one unit! Filtration 5 μm

Positive pressure 1.0 MPa

Positive pressure 0 to 1 MPa

IN → OUT

e.g.) Protection of solenoid valves

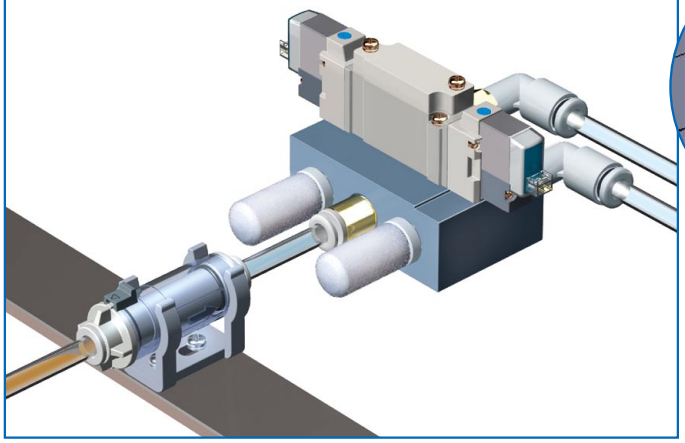

Vacuum pressure −100 kPa

Vacuum pressure −100 to 0 kPa

IN → OUT

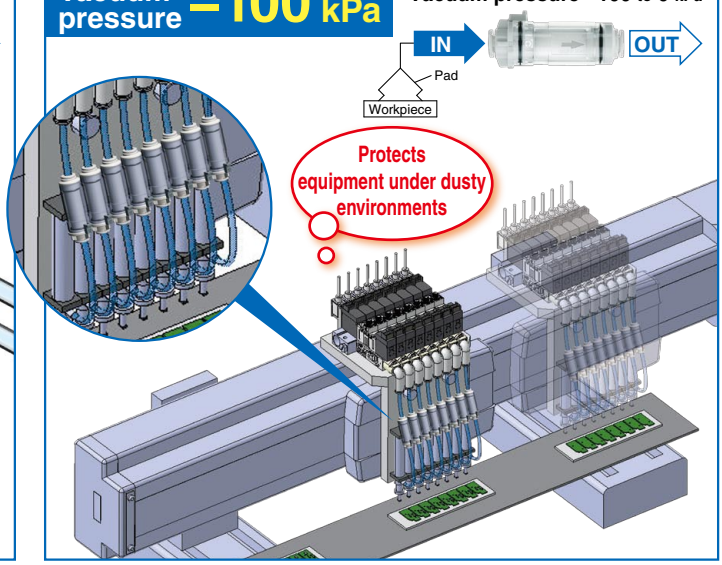

Variations 4 sizes 18 models

Series	Applicable tubing O.D.							Maximum flow rate under vacuum pressure [L/min (ANR)]	Maximum flow rate under positive pressure [L/min (ANR)]
	Metric / Inch	ø2 —	ø3.2 ø1/8"	ø4 ø5/32"	ø6 ø1/4"	ø8 ø5/16"	ø10 ø3/8"	ø12 —		
New ZFC1□	●	●							5	45
New ZFC3□		●	●	●					10	80
ZFC5□				●	●				20	200
ZFC7□					●	●	●	●	100	650

At 0.7 MPa with a pressure drop of 30 kPa. The required flow rate may not be obtained due to piping resistance.

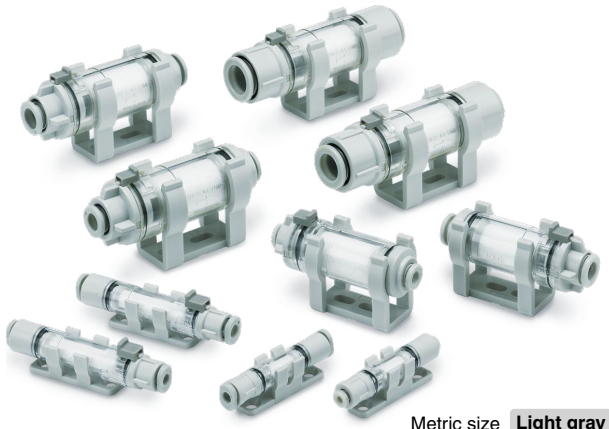

Metric size **Light gray**

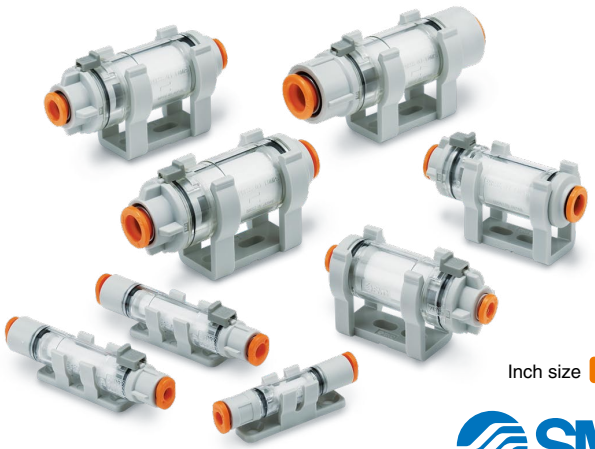

Inch size **Orange**

ZFC Series

SMC

CAT.ES100-103B

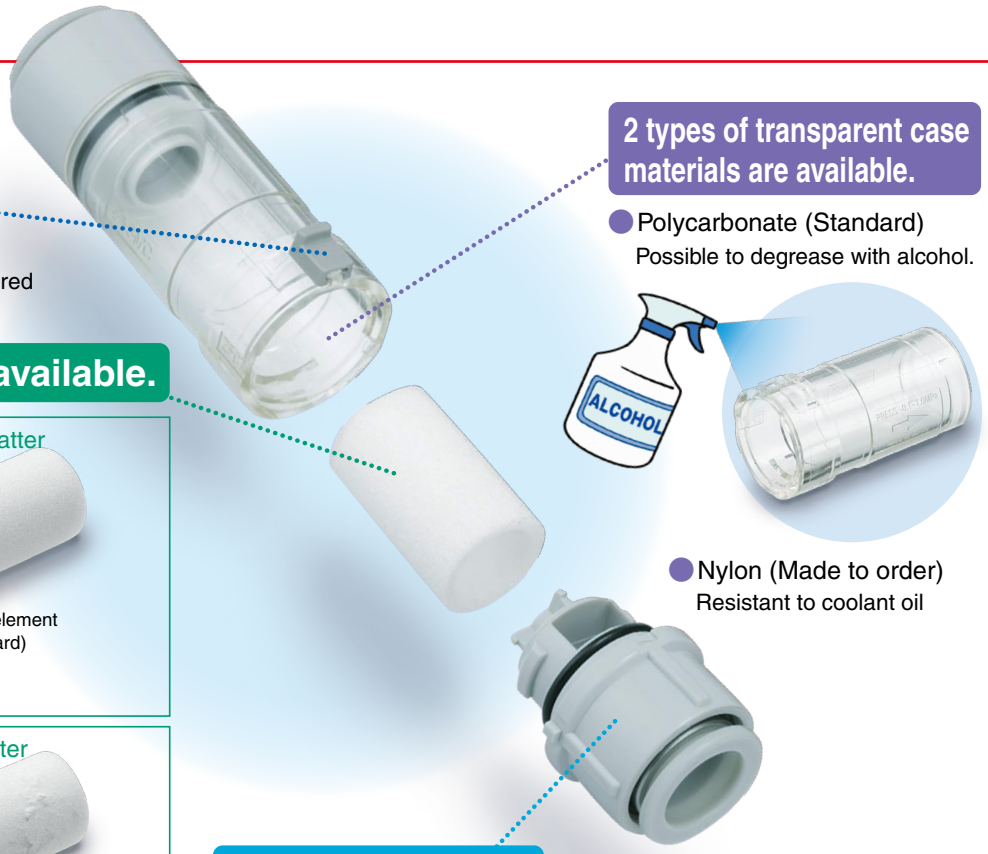

With lock mechanism

During positive pressure, prevents components from being scattered when loosened.

2 types of transparent case materials are available.

- Polycarbonate (Standard)
  Possible to degrease with alcohol.

- Nylon (Made to order)
  Resistant to coolant oil

2 element colors are available.

No adhesion of foreign matter

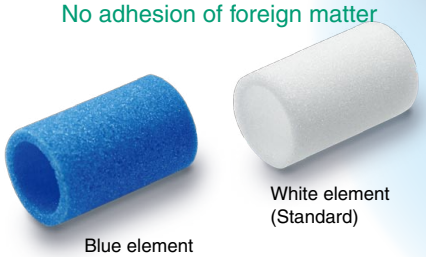

White element (Standard)

Blue element (Made to order)

Adhesion of foreign matter



Easy to visually check white foreign matter

With One-touch fitting

Metric size **Light gray** : ø2, ø3.2, ø4, ø6, ø8, ø10, ø12
Inch size **Orange** : ø1/8", ø5/32", ø1/4", ø5/16", ø3/8"

2 levels of filtration rating are available.

- 5 µm
- 10 µm (Made to order)

Selectable piping port sizes

Up to four types of piping port sizes can be selected with the same filtration area.

Series	Filtration area [mm²]	Applicable tubing O.D. (Upper/Metric, Lower/Inch)						
		ø2	ø3.2	ø4	ø6	ø8	ø10	ø12
		—	ø1/8"	ø5/32"	ø1/4"	ø5/16"	ø3/8"	—
ZFC1□	140	●	●					
ZFC3□	470		●	●				
ZFC5□	750			●	●			
ZFC7□	1260				●	●	●	●

Available with different bores on IN and OUT sides! Made to Order

IN side < OUT side

Applicable tubing O.D. [mm]	
IN port size	OUT port size
ø2	ø3.2
ø3.2	ø4
ø4	ø6



IN side > OUT side

Applicable tubing O.D. [mm]	
IN port size	OUT port size
ø8	ø6
ø10	ø8
ø12	ø10



Application examples

Improvement in air quality of air blow

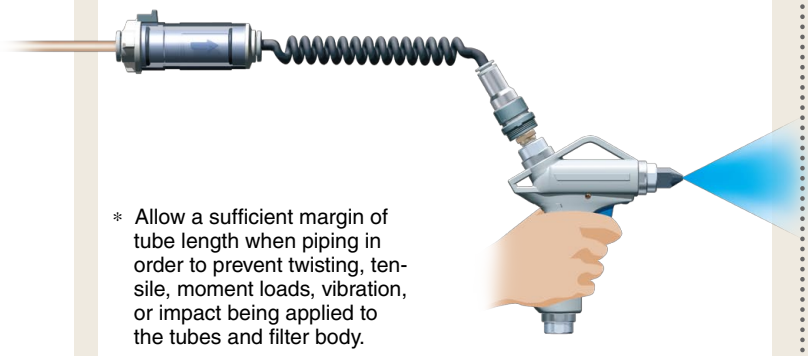

* Allow a sufficient margin of tube length when piping in order to prevent twisting, tensile, moment loads, vibration, or impact being applied to the tubes and filter body.

Flexible mounting orientation

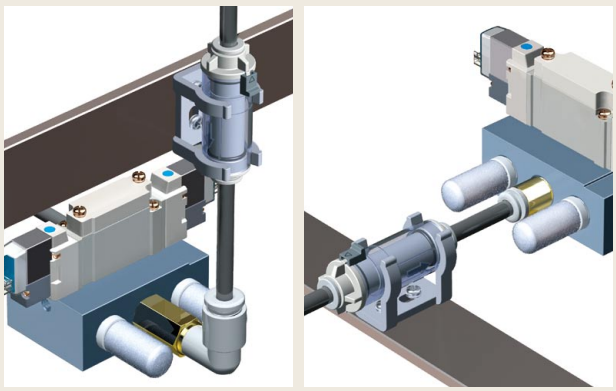

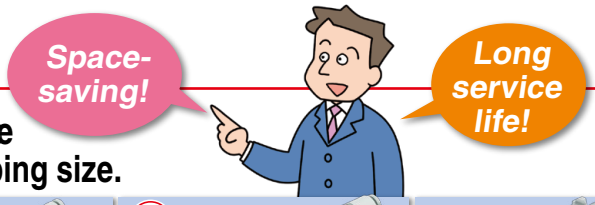

Two types of bodies can be selected with the same piping size.

Applicable tubing O.D.		New ZFC1□	New ZFC3□	ZFC5□	ZFC7□
Metric	Inch				
ø3.2	ø1/8"	Space-saving or Long service life (Filtration area: 1.5 times or more)*1		—	—
ø4	ø5/32"	—	Space-saving or Long service life (Filtration area: 1.5 times or more)*1		—
ø6	ø1/4"	—	—	Space-saving or Long service life (Filtration area: 1.5 times or more)*1	

*1 Compared with the same tubing O.D.

Filter Variations

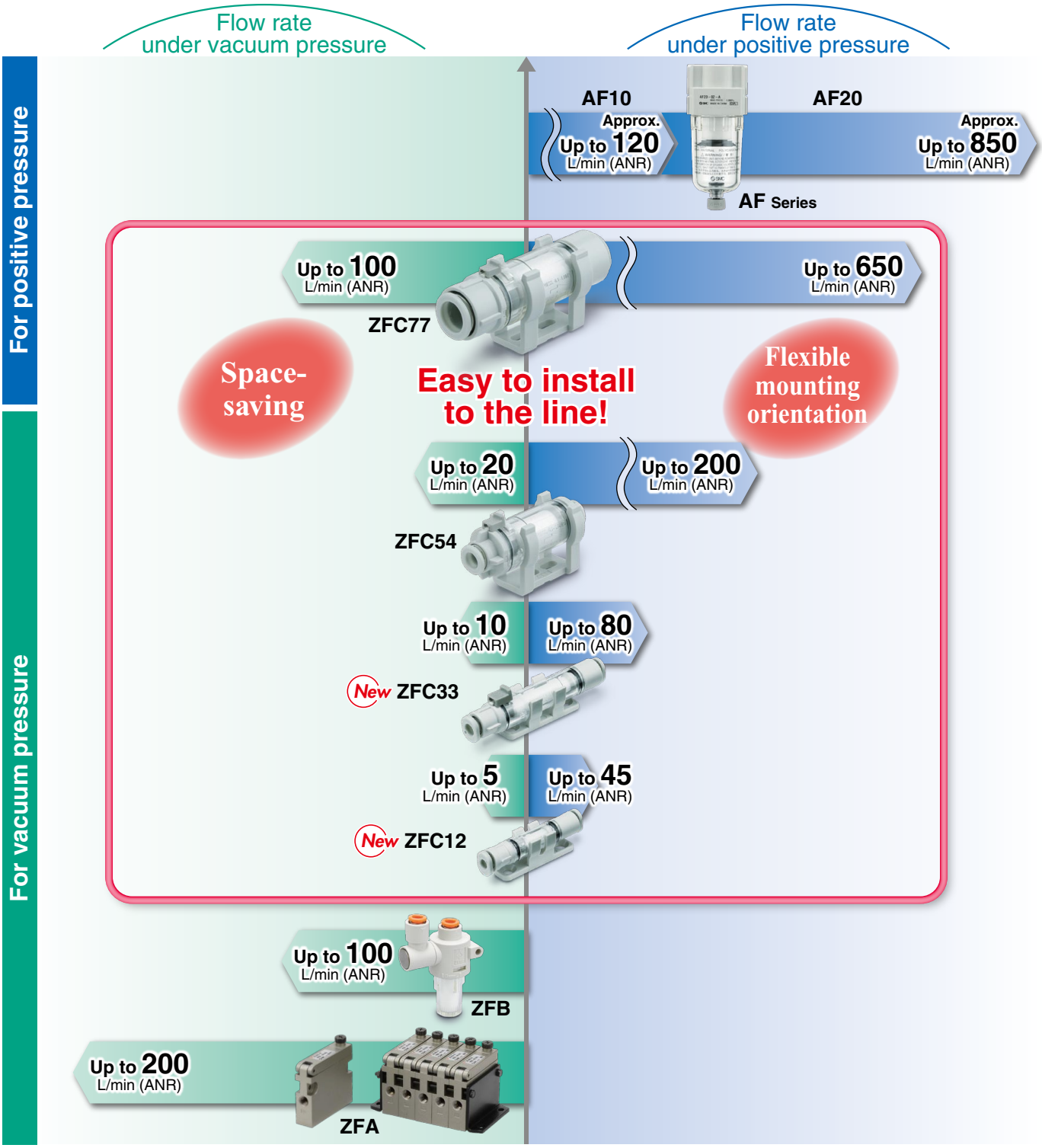

Flow rate (positive pressure) conditions: Supply pressure of 0.7 MPa, Pressure drop of 30 kPa

In-line Air Filter
ZFC Series

RoHS

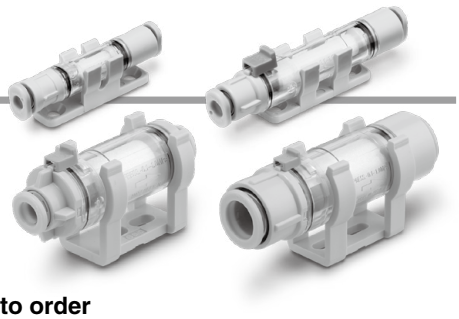

How to Order

ZFC 5 4 – B –

Body size

Symbol	Body size	Filtration area
1	5 L/min	140 mm²
3	10 L/min	470 mm²
5	20 L/min	750 mm²
7	100 L/min	1260 mm²

Applicable tubing O.D.

Metric size

Symbol	Applicable tubing O.D.	ZFC1	ZFC3	ZFC5	ZFC7
1	ø2	●	—	—	—
2	ø3.2	●	●	—	—
3	ø4	—	●	●	—
4	ø6	—	—	●	●
5	ø8	—	—	—	●
6	ø10	—	—	—	●
7	ø12	—	—	—	●

Inch size

A	ø1/8"	●	●	—	—
B	ø5/32"	—	●	●	—
D	ø1/4"	—	—	●	●
E	ø5/16"	—	—	—	●
F	ø3/8"	—	—	—	●

Option

Nil	None
B	With bracket

Made to order

Refer to page 8 for details.

Symbol	Specifications
X01	Different diameters (IN side < OUT side)
X02	Different diameters (IN side > OUT side)
X03	Blue element
X04	Filtration: 10 μm
X05	FKM/Oil free (Seal)
X06	Nylon

Specifications

Model		ZFC1□		ZFC3□		ZFC5□		ZFC7□			
Port size (Applicable tubing O.D.)	Metric size	ø2	ø3.2	ø3.2	ø4	ø4	ø6	ø6	ø8	ø10	ø12
	Inch size	—	ø1/8"	ø1/8"	ø5/32"	ø5/32"	ø1/4"	ø1/4"	ø5/16"	ø3/8"	—
Fluid		Air, Nitrogen									
Operating pressure		–100 kPa to 1.0 MPa (at 20°C)									
Flow rate (Positive pressure) [L/min] *1		15	45	50	80	100	200	250	450	550	650
Flow rate (Vacuum pressure) [L/min]		2	5	7	10	10	20	30	70	80	100
Proof pressure [MPa]		1.5 (at 20°C)									
Operating and ambient temperature range [°C]		0 to 60									
Filtration [μm]		5 (Filtration efficiency 95%)									
Element replacement differential pressure [MPa]		0.1 (Vacuum pressure 20 kPa)									
Filtration area [mm²]		140		470		750		1260			
Applicable tubing material		Nylon, Soft nylon, Polyurethane									
Weight [g]		2.5		4.5		10.5		20.0		25.0	
Internal capacity [cm³]		0.5		1.7		4.5		6.0		7.0	
Total length [mm]		45.0		60.5		53.9		68.3		79.6	
Total width [mm]		8.5		11.2		19.0		23.6			
Bracket total length [mm]		10.0		11.5		23.0		27.3			
Case material		Polycarbonate									

*1 Flow rate (positive pressure) conditions: Supply pressure of 0.7 MPa, Pressure drop of 30 kPa

Max. Operating Pressure and Operating Temperature

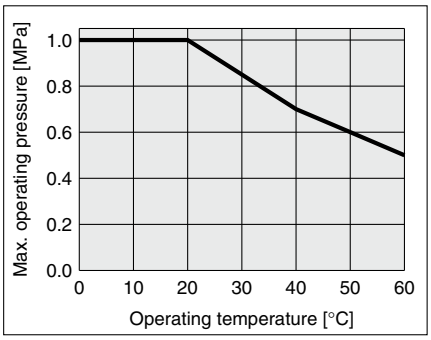

SMC

Flow Rate Characteristics

ZFC11 ø2

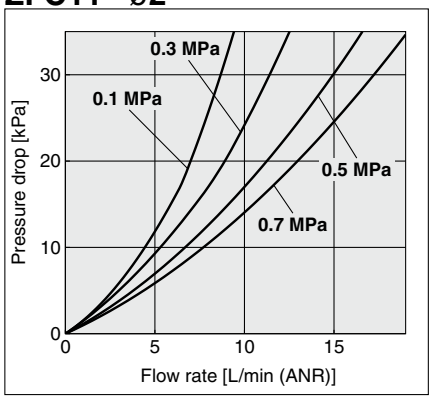

ZFC12/1A ø3.2, ø1/8"

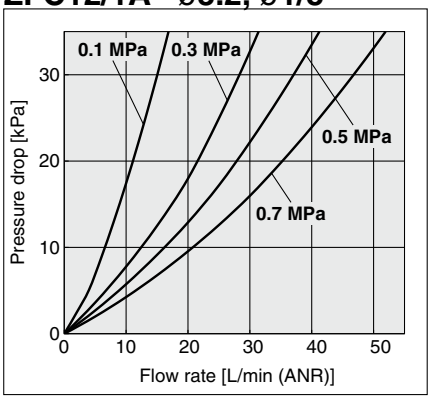

ZFC32/3A ø3.2, ø1/8"

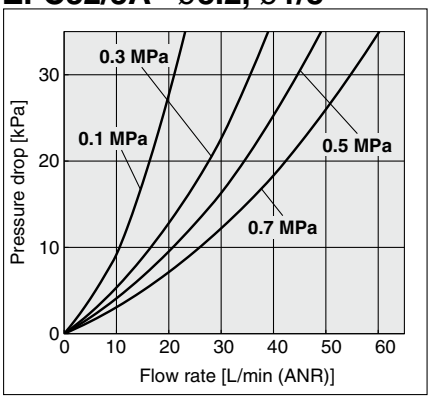

ZFC33/3B ø4, ø5/32"

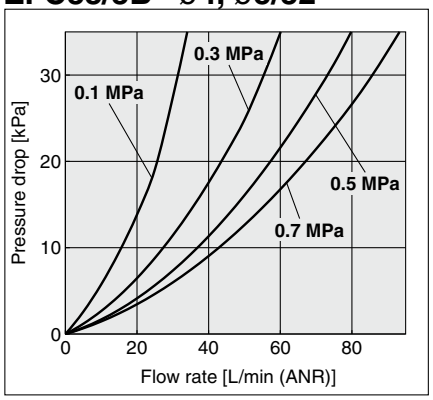

ZFC53/5B ø4, ø5/32"

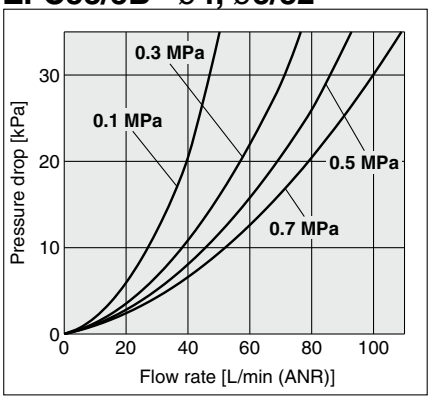

ZFC54/5D ø6, ø1/4"

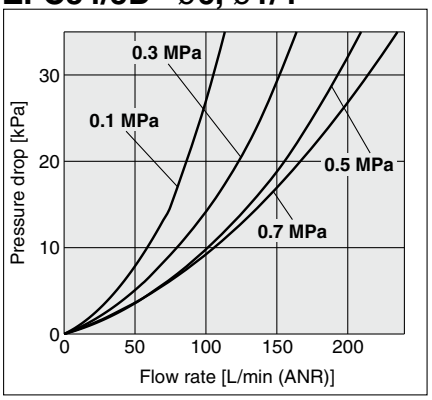

ZFC74/7D ø6, ø1/4"

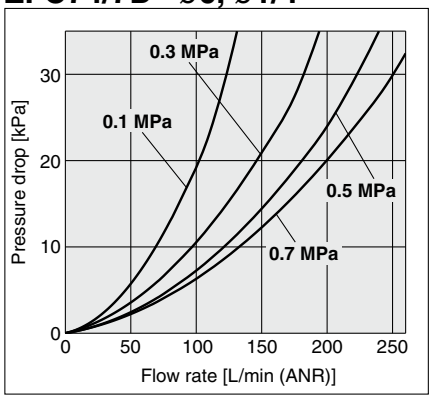

ZFC75/7E ø8, ø5/16"

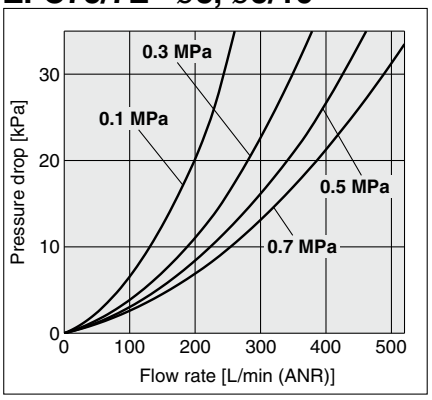

ZFC76/7F ø10, ø3/8"

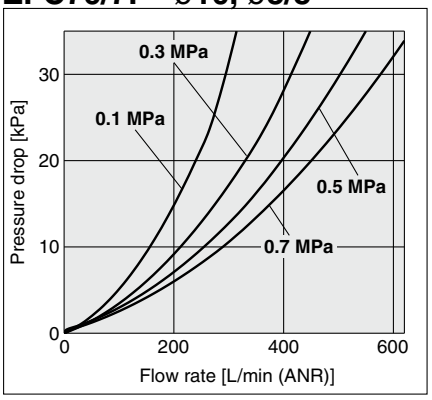

ZFC77 ø12

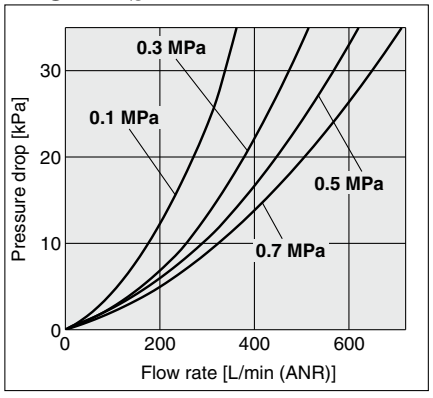

Construction

Component Parts

No.	Description	Material	Quantity
1	**Case**	PC	1
2	**Cover**	Resin PBT	2
3	**Element**	Sintered resin	1
4	**O-ring**	HNBR	2
5	**Bracket**	Resin PBT	1

Replacement Element Part No. (10 elements included)

Part no.	Applicable filter	Element size	Quantity
ZFC-EL-1	ZFC1	ø5 x ø3 x L11	10
ZFC-EL-2	ZFC3	ø6 x ø4 x L25	10
ZFC-EL-3	ZFC5	ø12 x ø8 x L20	10
ZFC-EL-4	ZFC7	ø16 x ø12 x L25	10

Replacement Bracket Part No.

Part no.	Applicable filter	Quantity
ZFC-BR001	ZFC1	1
ZFC-BR002	ZFC3	1
ZFC-BR003	ZFC5	1
ZFC-BR004	ZFC7	1

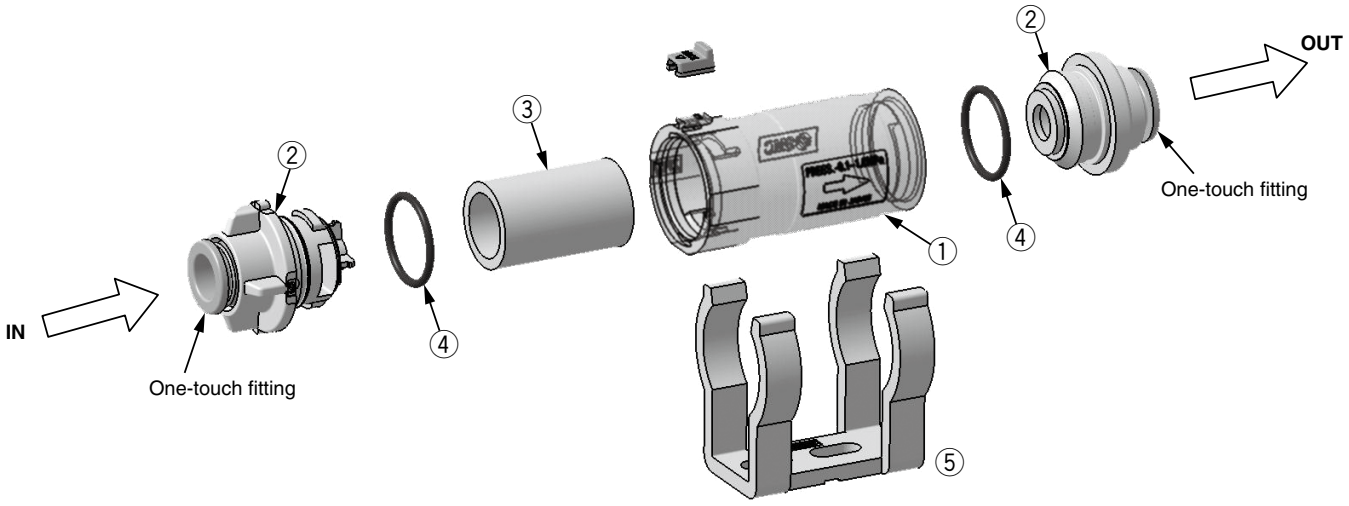

Element Replacement

Procedure

1. Stop operation and reduce the filter's internal pressure to atmosphere.
2. Slide the lock mechanism in the direction of the arrow to release the lock. (The ZFC1 series is not equipped with a lock mechanism.)
3. Rotate the cover counterclockwise at least 90 degrees.
4. Pull the cover out of the case to remove the element. Remove dust and other debris remaining inside the case by blowing it out with air etc. (Also, confirm that the O-ring is not damaged.)
5. Attach the new element to the cover and insert it into the case.
6. Align the raised part of the cover with the product no. display of the body, and push the cover to the end of the body. Rotate it clockwise until it stops.
7. Set the lock mechanism and check that the cover is locked completely.

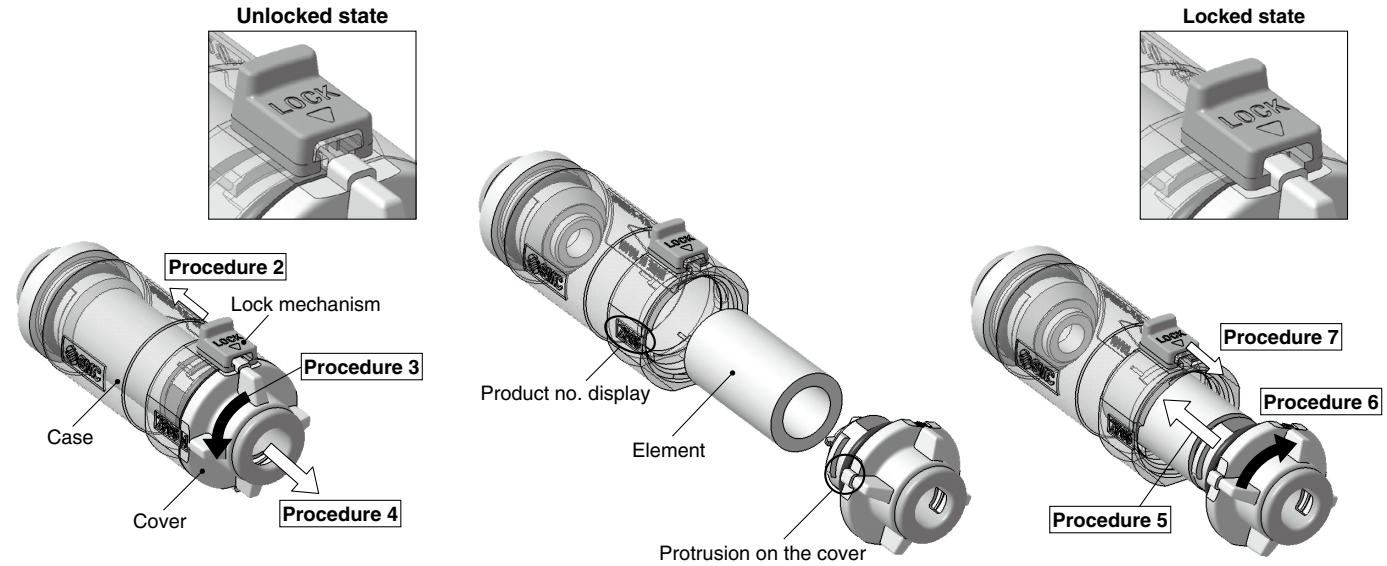

Dimensions

ZFC1
(ø2, ø3.2, ø1/8")

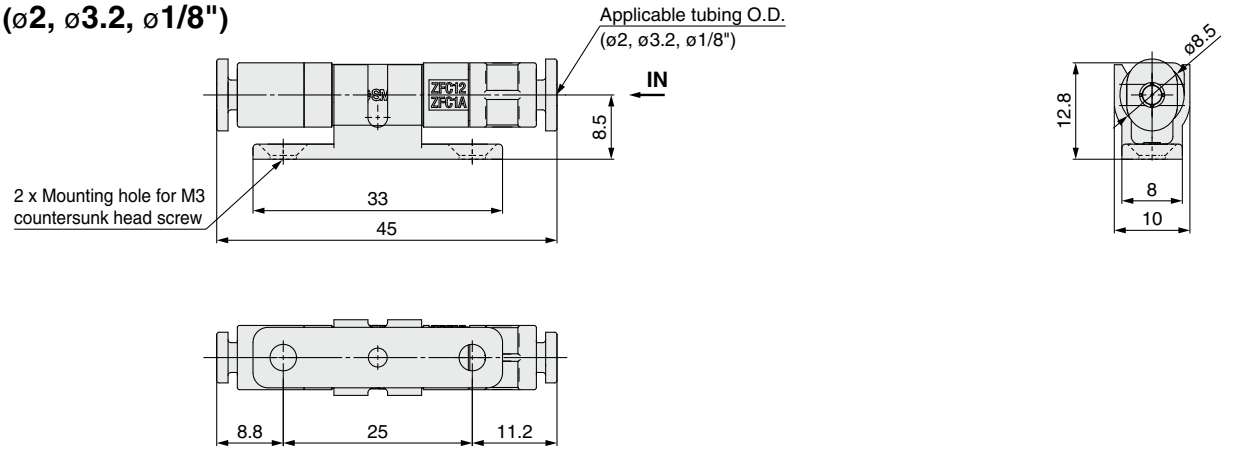

ZFC3
(ø3.2, ø4, ø1/8", ø5/32")

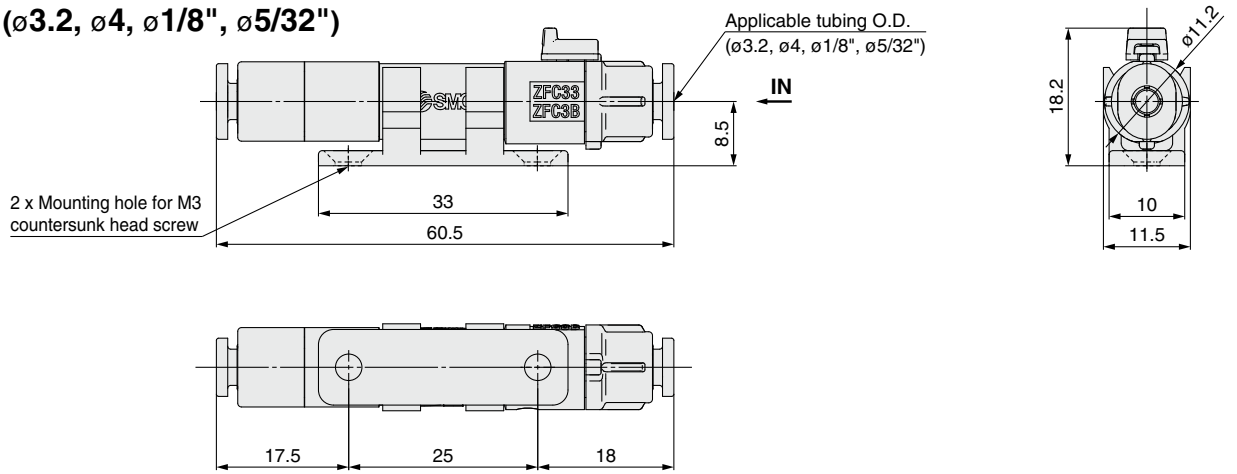

ZFC5
(ø4, ø6, ø5/32", ø1/4")

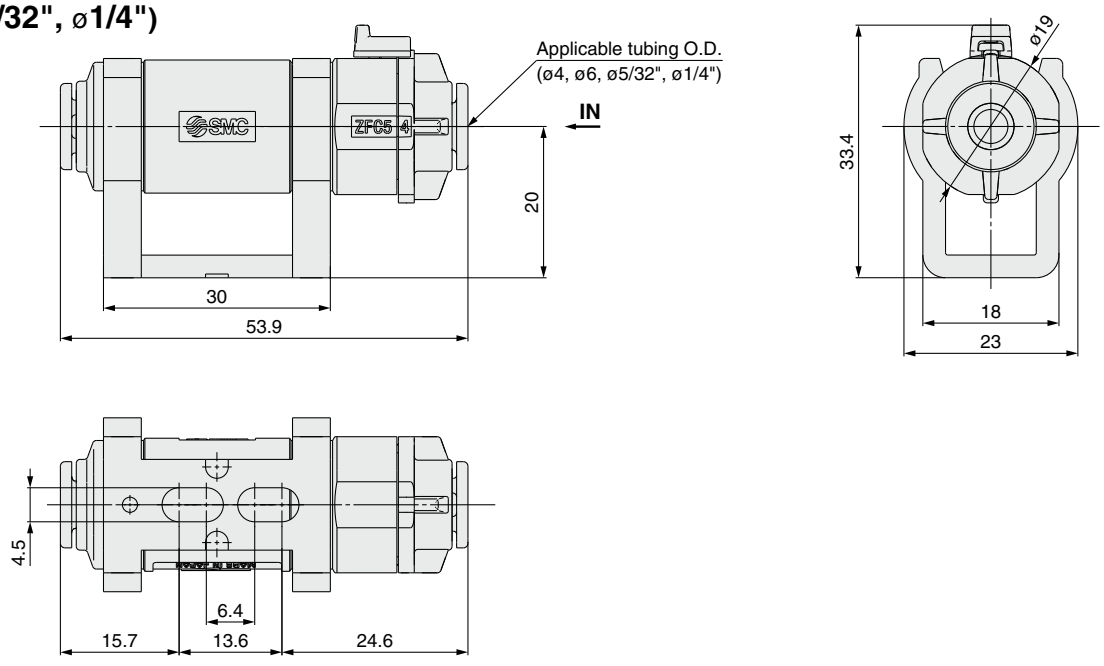

Dimensions

ZFC7
(ø6, ø8, ø1/4", ø5/16")

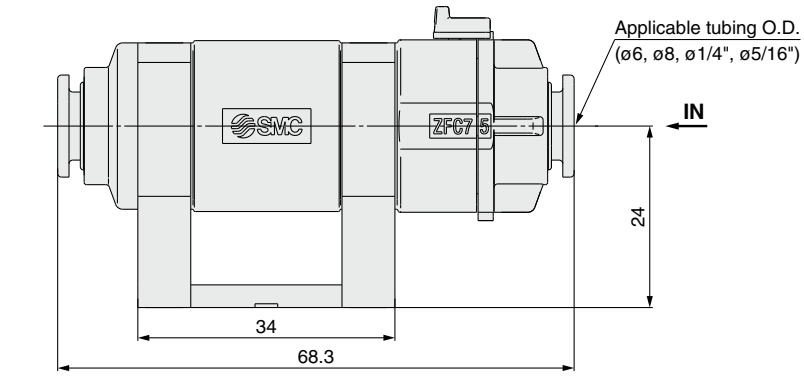

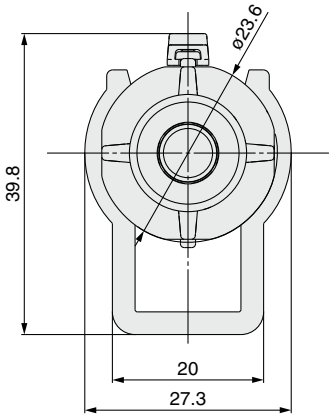

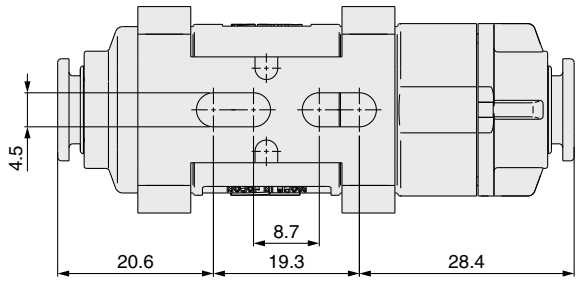

ZFC7
(ø10, ø12, ø3/8")

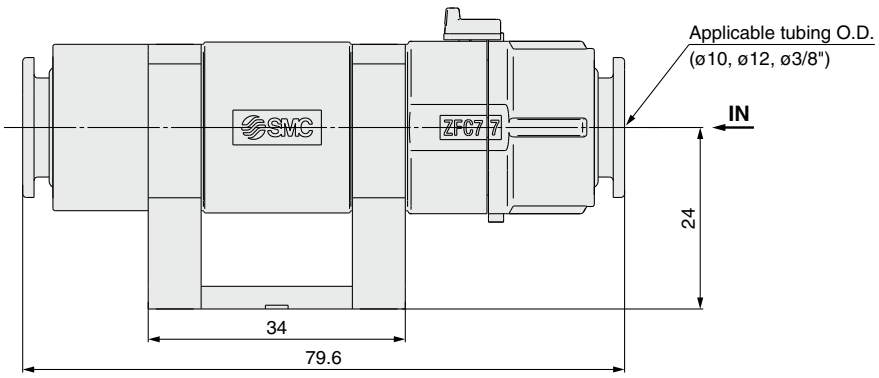

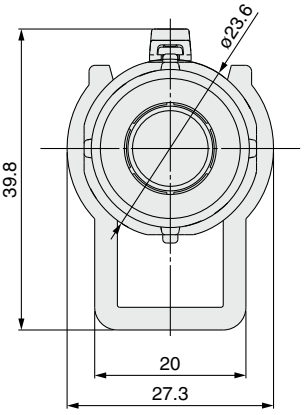

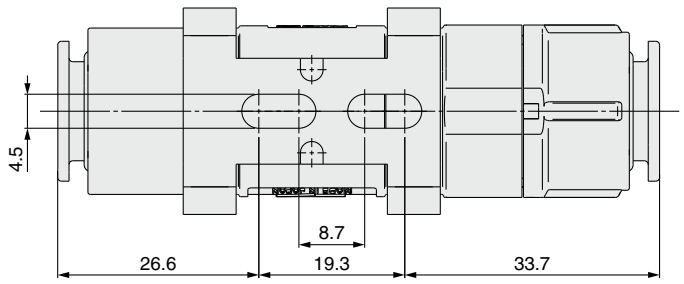

Made to Order

Please contact SMC for detailed dimensions, specifications and lead times.

Made to Order

1 Different diameters (IN side < OUT side) — Symbol -X01

IN side applicable tubing O.D. (Metric size): ø2 to ø4
OUT side applicable tubing O.D. (Metric size): ø3.2 to ø6

ZFC 53 – □ – X01

- 53: Applicable tubing O.D.
- □: Option
- X01: IN side < OUT side

Applicable tubing O.D.

Symbol	IN port	OUT port
11	ø2	ø3.2
32	ø3.2	ø4
53	ø4	ø6

Option

Nil	None
B	With bracket

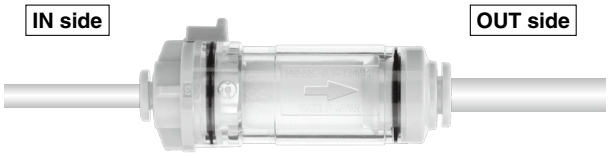

2 Different diameters (IN side > OUT side) — Symbol -X02

IN side applicable tubing O.D. (Metric size): ø8 to ø12
OUT side applicable tubing O.D. (Metric size): ø6 to ø10

ZFC7 5 – □ – X02

- 5: Applicable tubing O.D.
- □: Option
- X02: IN side > OUT side

Applicable tubing O.D.

Symbol	IN side	OUT side
5	ø8	ø6
6	ø10	ø8
7	ø12	ø10

Option

Nil	None
B	With bracket



3 Blue element — Symbol -X03

Easy to recognize white foreign matter on the element by coloring the element.

Standard product – X03

- X03: Blue element

Replacement Element Part No. (Element: 1 pc.)

Series	Part no.
ZFC1□-□-X03	ZFC-EL019
ZFC3□-□-X03	ZFC-EL020
ZFC5□-□-X03	ZFC-EL015
ZFC7□-□-X03	ZFC-EL016

4 Filtration: 10 μm — Symbol -X04

Standard product – X04

- X04: Filtration: 10 μm

Replacement Element Part No. (Element: 1 pc.)

Series	Part no.
ZFC1□-□-X04	ZFC-EL021
ZFC3□-□-X04	ZFC-EL022
ZFC5□-□-X04	ZFC-EL017
ZFC7□-□-X04	ZFC-EL018

5 Seal material: FKM Oil free: Seal — Symbol -X05

Standard product – X05

Note) Applicable only to the body sizes 5 and 7.

6 Case material: Nylon — Symbol -X06

Standard product – X06

- X06: Case material: Nylon

Specific Product Precautions 1

Be sure to read this before handling the products. Refer to the back cover for safety instructions. For vacuum equipment precautions, refer to the "Handling Precautions for SMC Products" and the "Operation Manual" on the SMC website: http://www.smcworld.com

Design

⚠Warning

1. Confirm the specifications.

Products represented in this catalog are designed only for use in compressed air systems (including vacuum).

Do not operate at pressures, temperatures, etc., beyond the range of specifications, as this can cause damage or malfunction. (Refer to the specifications.)

Please contact SMC when using a fluid other than compressed air (including vacuum).

We do not guarantee against any damage if the product is used outside of the specification range.

2. Modification prohibited

Do not make any modifications, including additional machining. It may cause human injury and/or an accident and will void the warranty.

⚠Caution

1. When vacuum adsorption and release are used on the same line, the dust trapped by the vacuum adsorption scatters again during vacuum release. Therefore, both vacuum pressure and positive pressure cannot be used together on the same line.

Mounting

⚠Warning

1. Operation manual

Install the products and operate them only after reading the operation manual carefully and understanding its contents. Also, keep the manual where it can be referred to as necessary.

2. Maintenance space

Allow sufficient space for maintenance and inspection.

3. Observe the tightening torque for screws.

Tighten the screws to the recommended torque for mounting the product.

4. Connect tubing to the IN and OUT One-touch fittings in accordance with the precautions for One-touch fittings.

⚠Caution

1. Connect the piping after checking the arrow indication showing the flow direction on the body. If the piping is connected the other way around, it is not possible to seal the element.

2. Allow a sufficient margin of tube length when piping in order to prevent twisting, tensile, moment loads, vibration, or impact being applied to the tubes and filter body.

Air Supply

⚠Warning

1. Type of fluids

Please consult with SMC when using the product in applications other than compressed air.

2. When there is a large amount of drainage

Compressed air containing a large amount of drainage can cause the malfunction of pneumatic equipment. An air dryer or water separator should be installed upstream from filters.

3. Drain flushing

If condensation in the drain bowl is not emptied on a regular basis, the bowl will overflow and allow the condensation to enter the compressed air lines. This causes the malfunction of pneumatic equipment. If the drain bowl is difficult to check and remove, the installation of a drain bowl with an auto drain option is recommended.

Refer to "SMC Air Preparation System" for further details on compressed air quality.

4. Use clean air.

Do not use compressed air that contains chemicals, synthetic oils that include organic solvents, salt, corrosive gases, etc., as they can cause damage or malfunction.

Operating Environment

⚠Warning

1. Do not use in an atmosphere where corrosive gases, chemicals, sea water, water, or water steam is present. Do not use in cases where there is direct contact with any of the above.

2. Do not use in a place subject to heavy vibration and/or impact.

3. Do not use in an environment where flammable gas or explosive gas is present. Usage may cause a fire or explosion. The products do not have an explosion proof construction.

4. The valve should not be exposed to prolonged sunlight. Use a protective cover if necessary.

5. Remove any sources of excessive heat.

6. In locations where there is contact with water, oil, weld spatter, etc., take suitable protective measures.

Specific Product Precautions 2

Be sure to read this before handling the products. Refer to the back cover for safety instructions. For vacuum equipment precautions, refer to the "Handling Precautions for SMC Products" and the "Operation Manual" on the SMC website: http://www.smcworld.com

Handling Precautions

⚠Warning

Use of intermittent air blow may increase piping temperatures. Therefore, observe the temperature for several hours during the trial operation. Also, pay attention to the product temperature during inspection.

The flow rate is throttled in the nozzle. If compressed air is supplied repeatedly, the air inside the piping may cause adiabatic compression. As a result, the temperature inside the piping increases. In this case, if the heat radiation to surroundings is not sufficient, the product temperature may exceed its operating temperature range. If compressed air is supplied under conditions where the product temperature exceeds its operating temperature range, this may cause the product to break. Take the preventive measures shown below.

1) Design to reduce piping capacity.
2) Build materials or mechanisms with high heat radiation ability into the areas around the nozzle.
3) Select a product with a wide operating temperature range.

Example of circuit when piping temperatures increase:
Pressure of 0.5 MPa or more, Ten times per minute

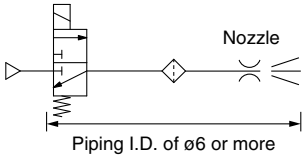

Maintenance

⚠Warning

1. Perform maintenance inspections according to the procedures indicated in the operation manual.

If handled improperly, malfunction and damage of machinery or equipment may occur.

2. Maintenance work

If handled improperly, compressed air can be dangerous.

The assembly, handling, repair, and element replacement of pneumatic systems should be performed by a knowledgeable and experienced person.

3. Drain flushing

Remove drainage from air filters regularly.

4. Removal of equipment and supply/exhaust of compressed air

When components are removed, first confirm that measures are in place to prevent workpieces from dropping, run-away equipment, etc. Then, cut off the supply pressure and electric power, and exhaust all compressed air from the system using the residual pressure release function.

When the equipment is operated after remounting or replacement, confirm that the equipment is operating normally.

Maintenance

⚠Warning

5. The performance of an ejector will deteriorate due to clogged suction filters and silencers.

High flow filters should be used, especially in dusty locations.

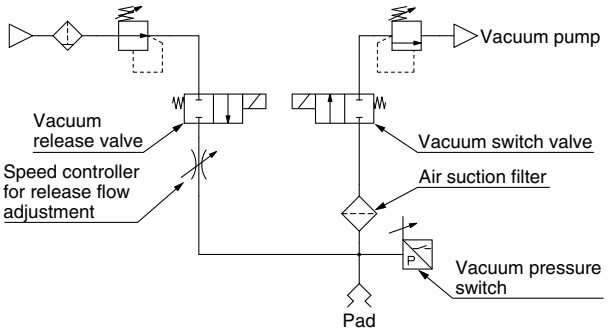

If a filter is required on the release pressure side, a different filter should be prepared.

* It is not possible to use vacuum pressure and positive pressure together on the same line.

6. When the element becomes clogged, stop operation and adjust the internal pressure of the filter to atmospheric pressure before replacing the element.

⚠Caution

1. Element should be replaced in either of the two cases below.

1) When pressure drop reaches 0.1 MPa of positive pressure or 20 kPa of vacuum pressure.
2) When the set values (flow rate, vacuum reaching time) change.

2. During disassembly and assembly, confirm that there are no scratches, damage, etc, to the O-ring.

3. Before using, confirm there is no leakage after replacing elements.

4. Be sure to check that the lock mechanism is locked securely before use.

⚠ Safety Instructions

These safety instructions are intended to prevent hazardous situations and/or equipment damage. These instructions indicate the level of potential hazard with the labels of **"Caution," "Warning"** or **"Danger."** They are all important notes for safety and must be followed in addition to International Standards (ISO/IEC)*1), and other safety regulations.

⚠ Caution: **Caution** indicates a hazard with a low level of risk which, if not avoided, could result in minor or moderate injury.

⚠ Warning: **Warning** indicates a hazard with a medium level of risk which, if not avoided, could result in death or serious injury.

⚠ Danger : **Danger** indicates a hazard with a high level of risk which, if not avoided, will result in death or serious injury.

*1) ISO 4414: Pneumatic fluid power – General rules relating to systems.
ISO 4413: Hydraulic fluid power – General rules relating to systems.
IEC 60204-1: Safety of machinery – Electrical equipment of machines.
(Part 1: General requirements)
ISO 10218-1: Manipulating industrial robots – Safety.
etc.

⚠ Warning

1. The compatibility of the product is the responsibility of the person who designs the equipment or decides its specifications.

Since the product specified here is used under various operating conditions, its compatibility with specific equipment must be decided by the person who designs the equipment or decides its specifications based on necessary analysis and test results. The expected performance and safety assurance of the equipment will be the responsibility of the person who has determined its compatibility with the product. This person should also continuously review all specifications of the product referring to its latest catalog information, with a view to giving due consideration to any possibility of equipment failure when configuring the equipment.

2. Only personnel with appropriate training should operate machinery and equipment.

The product specified here may become unsafe if handled incorrectly. The assembly, operation and maintenance of machines or equipment including our products must be performed by an operator who is appropriately trained and experienced.

3. Do not service or attempt to remove product and machinery/ equipment until safety is confirmed.

1. The inspection and maintenance of machinery/equipment should only be performed after measures to prevent falling or runaway of the driven objects have been confirmed.
2. When the product is to be removed, confirm that the safety measures as mentioned above are implemented and the power from any appropriate source is cut, and read and understand the specific product precautions of all relevant products carefully.
3. Before machinery/equipment is restarted, take measures to prevent unexpected operation and malfunction.

4. Contact SMC beforehand and take special consideration of safety measures if the product is to be used in any of the following conditions.

1. Conditions and environments outside of the given specifications, or use outdoors or in a place exposed to direct sunlight.
2. Installation on equipment in conjunction with atomic energy, railways, air navigation, space, shipping, vehicles, military, medical treatment, combustion and recreation, or equipment in contact with food and beverages, emergency stop circuits, clutch and brake circuits in press applications, safety equipment or other applications unsuitable for the standard specifications described in the product catalog.
3. An application which could have negative effects on people, property, or animals requiring special safety analysis.
4. Use in an interlock circuit, which requires the provision of double interlock for possible failure by using a mechanical protective function, and periodical checks to confirm proper operation.

⚠ Caution

1. The product is provided for use in manufacturing industries.

The product herein described is basically provided for peaceful use in manufacturing industries.
If considering using the product in other industries, consult SMC beforehand and exchange specifications or a contract if necessary.
If anything is unclear, contact your nearest sales branch.

Limited warranty and Disclaimer/ Compliance Requirements

The product used is subject to the following "Limited warranty and Disclaimer" and "Compliance Requirements".
Read and accept them before using the product.

Limited warranty and Disclaimer

1. The warranty period of the product is 1 year in service or 1.5 years after the product is delivered, whichever is first.*2)
   Also, the product may have specified durability, running distance or replacement parts. Please consult your nearest sales branch.
2. For any failure or damage reported within the warranty period which is clearly our responsibility, a replacement product or necessary parts will be provided.
   This limited warranty applies only to our product independently, and not to any other damage incurred due to the failure of the product.
3. Prior to using SMC products, please read and understand the warranty terms and disclaimers noted in the specified catalog for the particular products.

***2) Vacuum pads are excluded from this 1 year warranty.**
A vacuum pad is a consumable part, so it is warranted for a year after it is delivered.
Also, even within the warranty period, the wear of a product due to the use of the vacuum pad or failure due to the deterioration of rubber material are not covered by the limited warranty.

Compliance Requirements

1. The use of SMC products with production equipment for the manufacture of weapons of mass destruction (WMD) or any other weapon is strictly prohibited.
2. The exports of SMC products or technology from one country to another are governed by the relevant security laws and regulations of the countries involved in the transaction. Prior to the shipment of a SMC product to another country, assure that all local rules governing that export are known and followed.

⚠ Caution

SMC products are not intended for use as instruments for legal metrology.

Measurement instruments that SMC manufactures or sells have not been qualified by type approval tests relevant to the metrology (measurement) laws of each country. Therefore, SMC products cannot be used for business or certification ordained by the metrology (measurement) laws of each country.

Revision History

Edition B ∗ Added ZFC1□/3□.
∗ Change in the maximum flow rate conditions.

UU