Controllers/Drivers
JXC□/LEC□ Series

<Single Axis Controllers>

Step Data Input Type ..... p. 707

Step Motor
(Servo/24 VDC)
JXC51/61 Series



Servo Motor
(24 VDC)
LECA6 Series



Gateway Unit ..... p. 715

LEC-G Series



Programless Type ..... p. 719

Step Motor
(Servo/24 VDC)
LECP1 Series



Programless Type
(With Stroke Study) ..... p. 725

Step Motor
(Servo/24 VDC)
LECP2 Series

Specialized for LEM series



Pulse Input Type ..... p. 731

Step Motor
(Servo/24 VDC)
LECPA Series



EtherCAT/EtherNet/IP™/PROFINET/DeviceNet®/IO-Link/CC-Link Direct Input Type ..... p. 741

JXC□ Series

EtherCAT® EtherNet/IP™ PROFINET® DeviceNet™ IO-Link CC-Link



New

With STO sub-function

<Multi-Axis Controllers>

EtherNet/IP™ Direct Input Type ..... p. 747

For 3 axes ***JXC92 Series***



Parallel I/O/EtherNet/IP™ Direct Input Type ..... p. 749

For 4 axes ***JXC73 Series*** ***JXC83 Series***



JXC93 Series
EtherNet/IP™



Step Data Input Type JXC51/61, LECA6 Series p. 707



Step Motor
(Servo/24 VDC)
JXC51/61



Servo motor
(24 VDC)
LECA6

ACT 2 Controller Setting Software ACT Controller 2

Easy-to-use setting software ACT Controller 2 (For PC)

Various functions available in normal mode (Compared with the existing ACT Controller)

● Parameter and step data setting

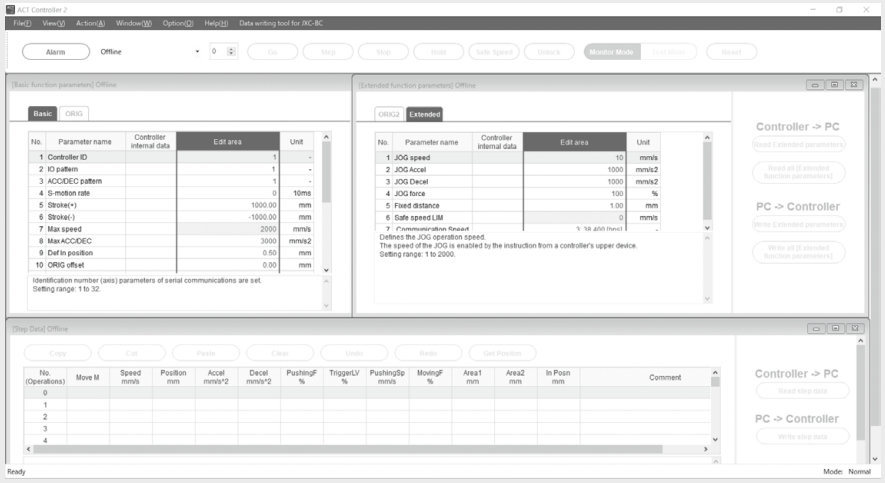

* Customers operating computers with specifications other than Windows 10/64 bit should use the existing ACT Controller.

● Alarm confirmation

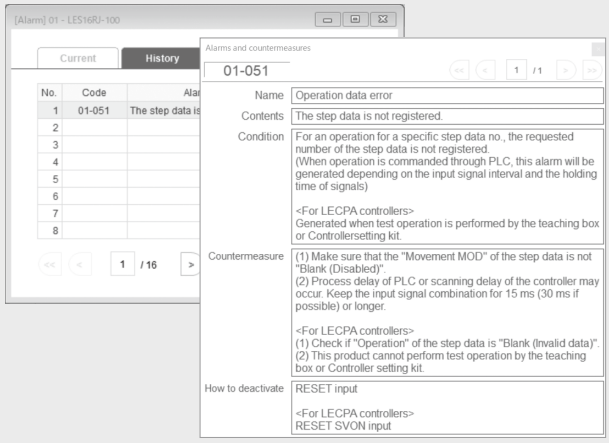

When an alarm is generated, the alarm details and countermeasures can be confirmed.

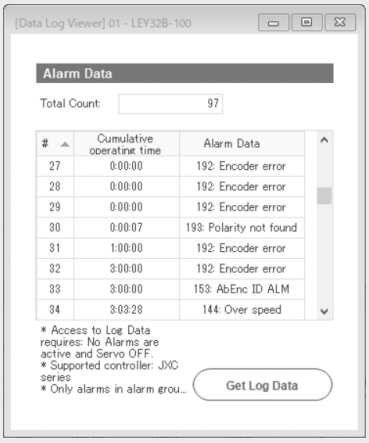

When an alarm is generated, the cumulative startup time of the controller can be confirmed.

● Waveform monitoring

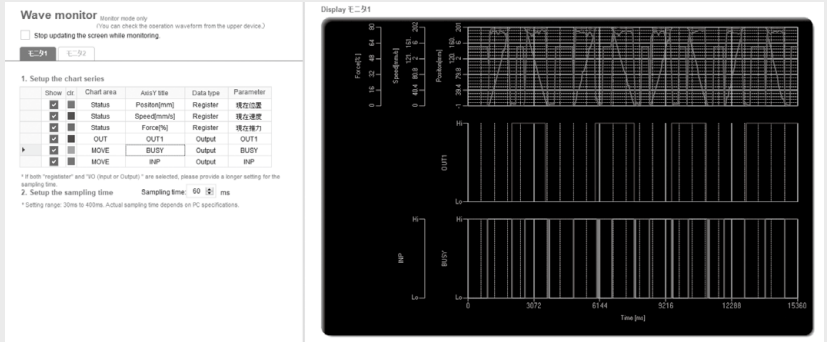

The position, speed, force, and input/output signals' waveform data during operation can be measured.

* When using the ACT Controller 2 test operation function, waveform monitoring is not available.

Step Data Input Type JXC51/61, LECA6 Series p. 707



Step Motor
(Servo/24 VDC)
JXC51/61



Servo motor
(24 VDC)
LECA6

ACT 2 Controller Setting Software ACT Controller 2

● The JXC-BC writing tool

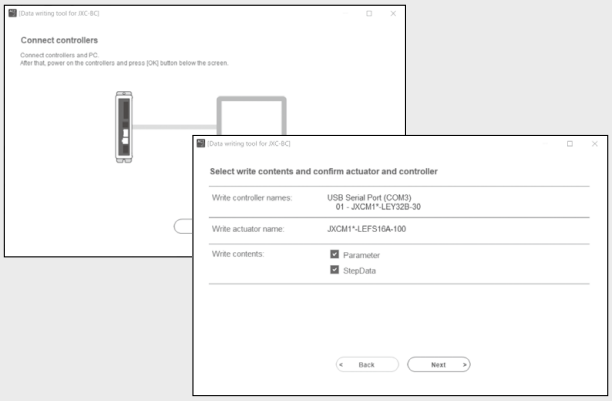

The writing tool can be used to write the connected actuator's parameters and step data to a JXC series blank controller.

∗ The JXC-BC writing tool cannot be used with the LECA6.

● Customizable plug-in functions

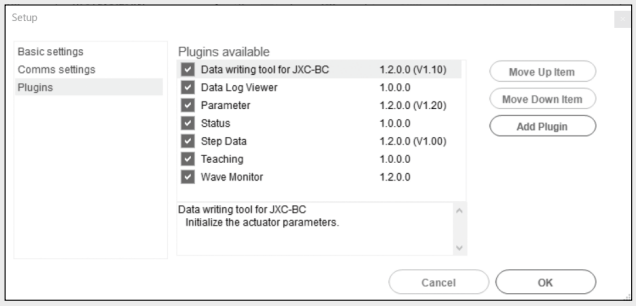

Which plug-in functions are displayed as well as the display order are customizable. Customers can add the functions they require.

In normal mode, various other test operation methods (program operation, jogging, moving of the constant rate, etc.), signal status monitoring, one-touch switching between Japanese and English, and other functions are available.

For immediate use, operate in easy mode.

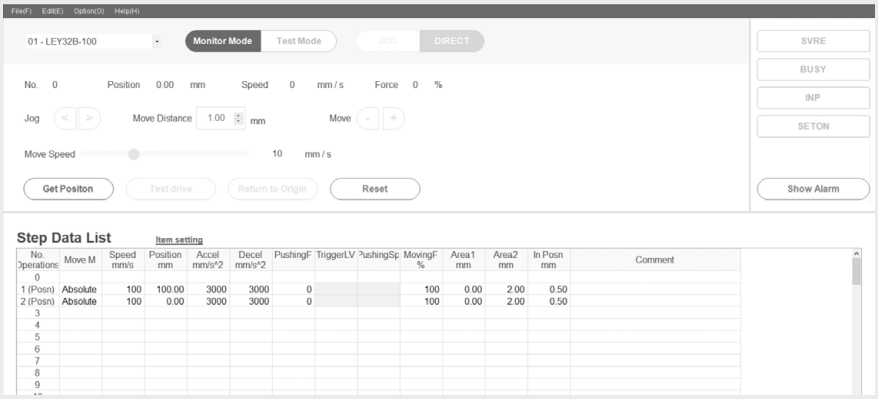

Step data setting, various test operations, and status confirmation can be done on a single screen.

Applicable controllers

Step motor controller **JXC□1 Series**



Controller with STO sub-function **JXC□F Series**



Step data input type **LECA6 Series**



Pulse input type **LECPA Series**



Hardware Requirements: Windows®10 (64 bit)

⚠Caution
Customers using a controller other than those listed above should use the existing controller setting software ACT Controller.

How to download the setting software

Click here for details.

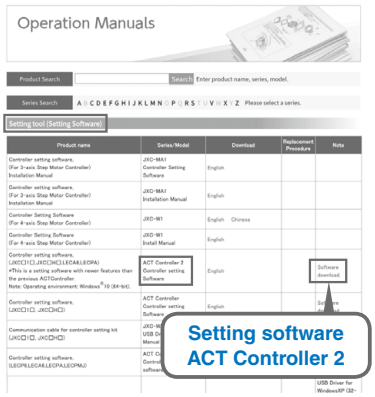

From the SMC website

Documents/Download
↓
Operation Manuals
↓
Electric Actuators
↓
Setting tool (Setting Software)

Setting software ACT Controller 2

Step Data Input Type JXC51/61, LECA6 Series p. 707



Step Motor
(Servo/24 VDC)
JXC51/61



Servo motor
(24 VDC)
LECA6

Teaching Box

◎Normal Mode

- Multiple step data can be stored in the teaching box and transferred to the controller.
- Continuous test drive by up to 5 step data

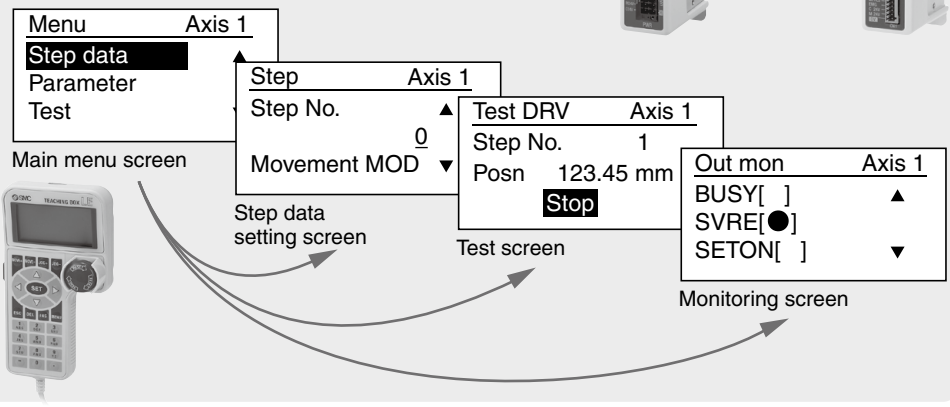

Teaching box screen

- Each function (step data setting, test drive, monitoring, etc.) can be selected from the main menu.

◎Easy Mode

- The simple screen without scrolling promotes ease of setting and operation.
- Choose an icon from the first screen to select a function.
- Set the step data and check the monitor on the second screen.



Example of setting the step data

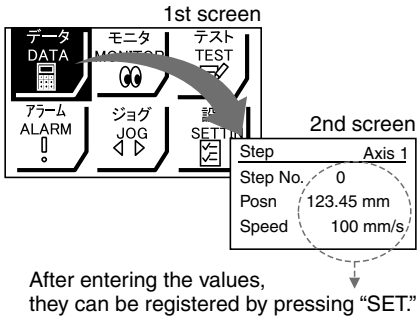

After entering the values, they can be registered by pressing "SET."

Example of checking the operation status

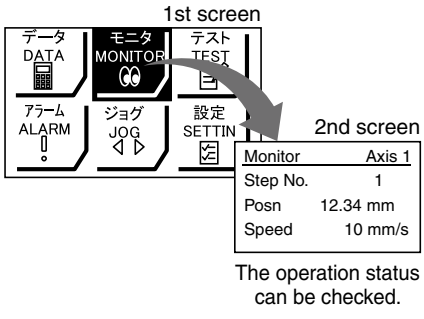

The operation status can be checked.

Teaching box screen

- **Data can be set by inputting only the position and speed.** (Other conditions are preset.)

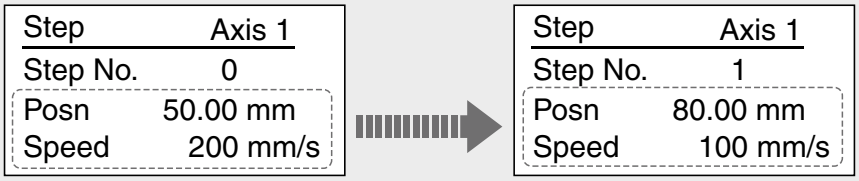

The actuator and controller are provided as a set. (They can be ordered separately as well.)

Confirm that the combination of the controller and actuator is correct.

<Check the following before use.>

① Check the actuator label for the model number. This number should match that of the controller.

② Check that the Parallel I/O configuration matches (NPN or PNP).

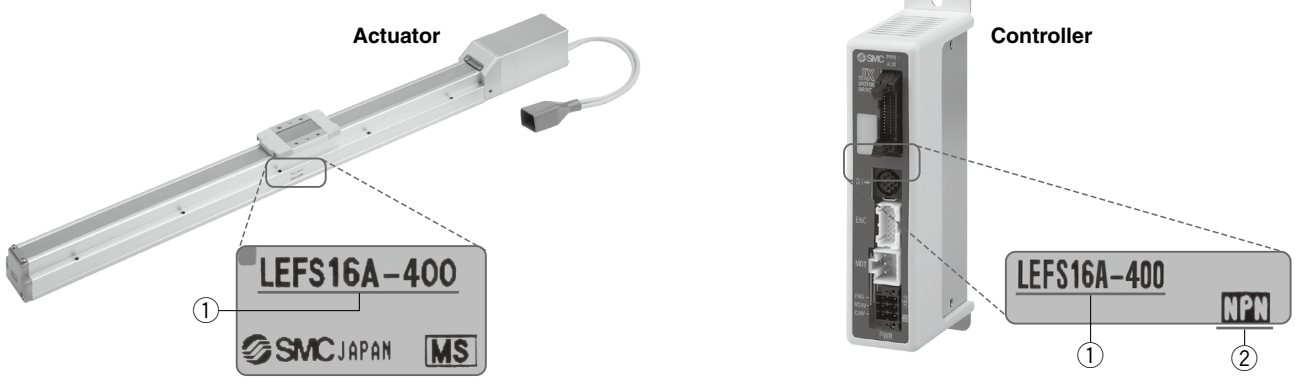

Fieldbus Network

Fieldbus-compatible Gateway (GW) Unit
LEC-G Series p. 715



◎ **Conversion unit for Fieldbus network and LEC serial communication**

Applicable Fieldbus protocols: CC-Link V2 DeviceNet PROFIBUS EtherNet/IP

◎ **Two methods of operation**

Step data input: Operate using preset step data in the controller.

Numerical data input: The actuator operates using values such as position and speed from the PLC.

◎ **Values such as position and speed can be checked on the PLC.**

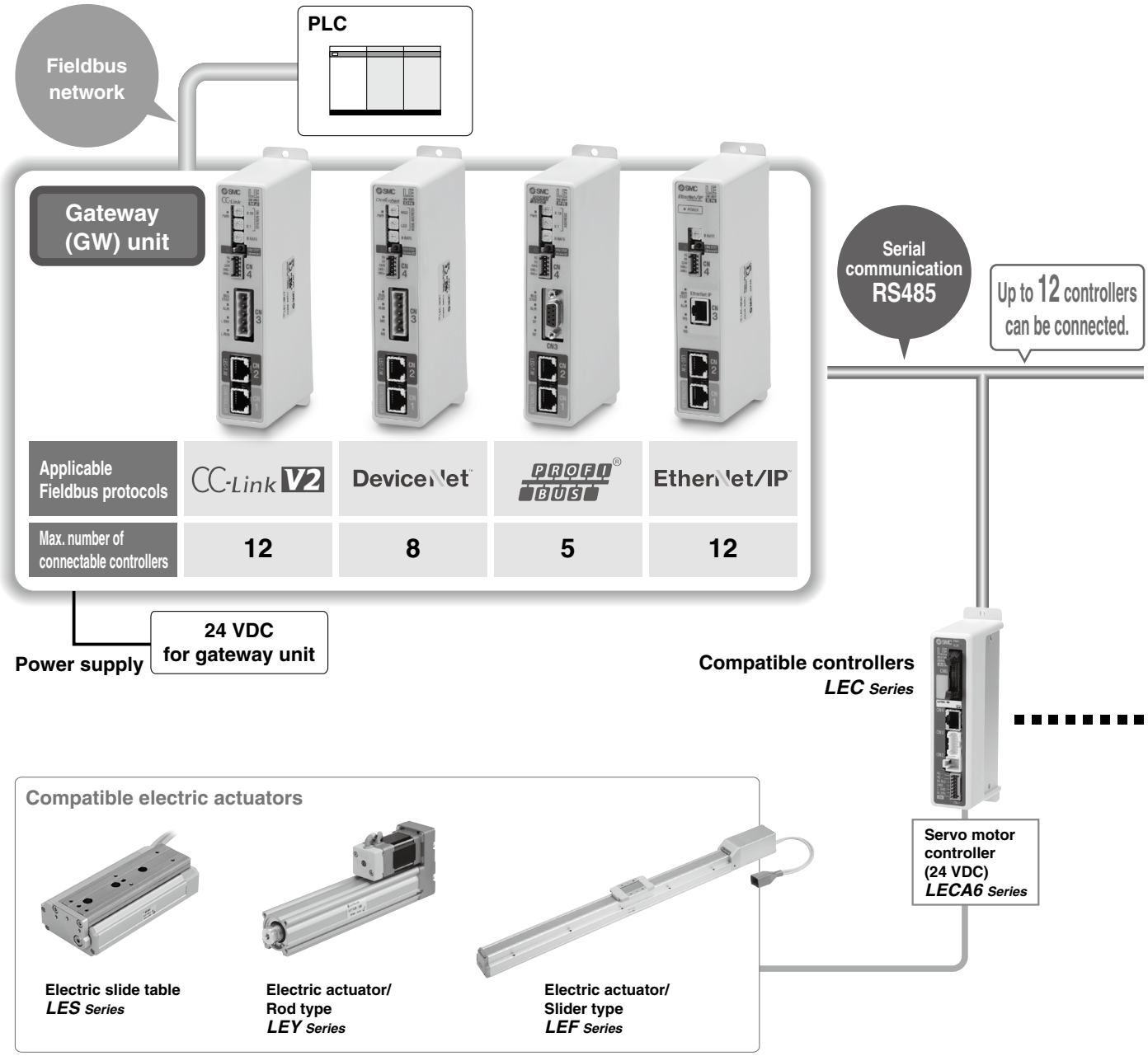

Programless Type *LECP1 Series* p. 719



Step motor
(Servo/24 VDC)
LECP1

No programming required!

Allows for the setting up of electric actuator operation without using a PC or teaching box

① Setting the position number

Set a registered number for the stop position.
Max. 14 points

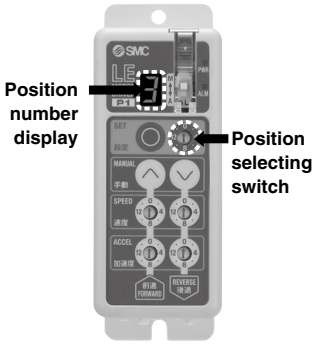

② Setting the stop position

Move the actuator to the desired stop position using the FORWARD and REVERSE buttons.

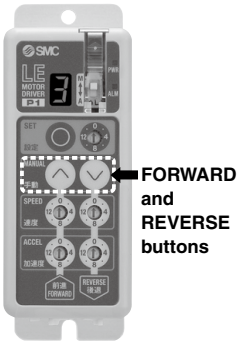

③ Registration

Register the stop position using the SET button.

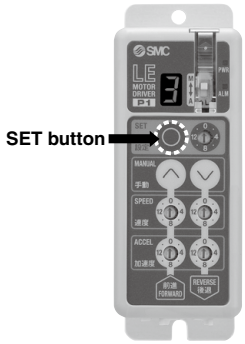

Speed/Acceleration 16-level adjustment

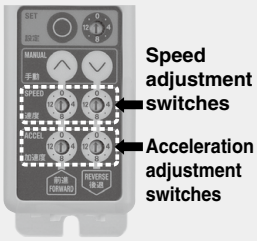

Programless Type (With Stroke Study) *LECP2 Series* p. 725



Step motor
(Servo/24 VDC)
LECP2

Stroke end operation similar to an air cylinder is possible.

(using the 1 stroke study and 2 reduced wiring below)

1 Stroke study (Simple registration of both stroke end positions)

After the stroke adjustment unit has travelled, both stroke ends are automatically registered by the stroke study function!

1 Setting position number → **2 The stroke study begins** ⇒ **Automatic registration of both end positions**

Set the position selecting switch to 15(F).



Press the SET button for 3 seconds or longer.



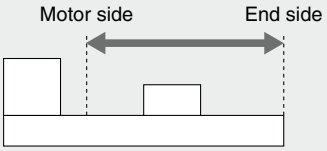

2 Wiring (Reduced wiring)

2-wire input signals[*1]

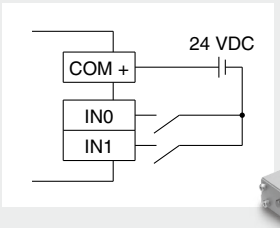

*1 Both stroke end positions and an intermediate position can be set using this wiring.

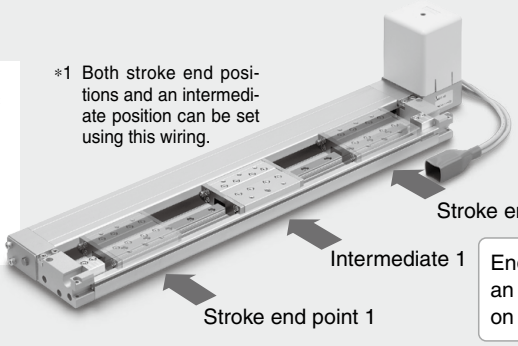

End point operation like an air cylinder by turning on input IN0 or IN1

Speed/Acceleration 16-level adjustment

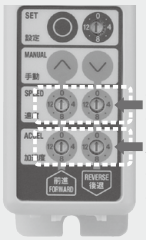

Compatible Actuators

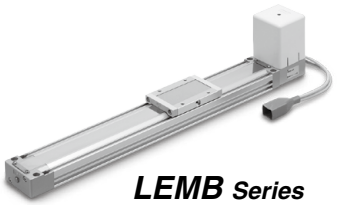

***LEMB* Series**

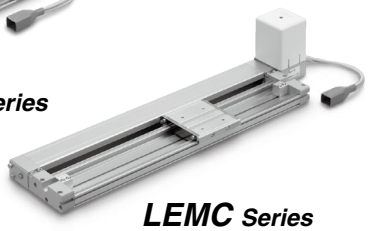

***LEMC* Series**



***LEMH* Series**

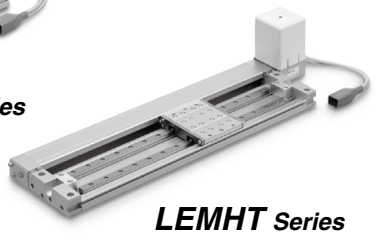

***LEMHT* Series**

Pulse Input Type *LECPA Series* p. 731



● This driver uses pulse signals to allow positioning at any position. The actuator can be controlled from the customers' positioning unit.

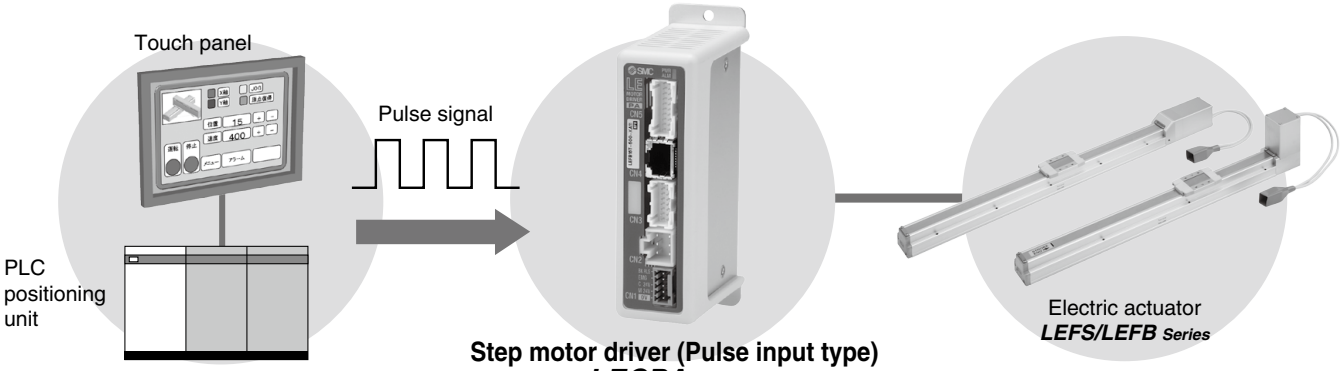

● Return-to-origin command signal

Enables automatic return-to-origin action

● With force limit function (Pushing force/Gripping force operation available)

Pushing force/Positioning operation is possible by switching signals.

ACT 2 Controller Setting Software ACT Controller 2 From p. 1

Easy-to-use setting software ACT Controller 2 (For PC)

Various functions available in normal mode (Compared with the existing ACT Controller)

- Parameter and step data setting
- Alarm confirmation
- Waveform monitoring
- Customizable plug-in functions

∗1 The JXC-BC writing tool cannot be used with the LECPA.
∗2 Customers operating computers with specifications other than Windows 10/64 bit should use the existing ACT Controller.

Function

Item	Step data input type JXC51/61/LECA6	Programless type LECP1	Programless type (With stroke study) LECP2	Pulse input type LECPA
Step data and parameter setting	• Input from controller setting software (PC) • Input from teaching box	• Selected using controller operation buttons	• Selected using controller operation buttons	• Input from controller setting software (PC) • Input from teaching box
Step data "position" setting	• Numerical value input from controller setting software (PC) or teaching box • Input numerical value • Direct teaching • JOG teaching	• Direct teaching • JOG teaching	• Stroke end: Automatic measurement • Intermediate position: Direct teaching JOG teaching	• No "Position" setting required Position and speed set by pulse signal
Number of step data	64 points	14 points	2 stroke end points + 12 intermediate points (14 points in total)	—
Operation command (I/O signal)	Step No. [IN*] input ⇒ [DRIVE] input	Step No. [IN*] input only	Step No. [IN*] input only	Pulse signal
Completion signal	[INP] output	[OUT*] output	[OUT*] output	[INP] output

Setting Items

TB: Teaching box PC: Controller setting software

Item		Contents	Easy Mode		Normal Mode	Step data input type JXC51/61/LECA6	Pulse input type LECPA	Programless type LECP1*1	Programless type (With stroke study) LECP2
			TB	PC	TB/PC				
Step data setting (Excerpt)	Movement MOD	Selection of "absolute position" and "relative position"	△	●	●	Set at ABS/INC	No setting required	Fixed value (ABS)	Fixed value (ABS)
	Speed	Transfer speed	●	●	●	Set in units of 1 mm/s		Select from 16 levels	Select from 16 levels
	Position	[Position]: Target position [Pushing]: Pushing start position	●	●	●	Set in units of 0.01 mm		Direct teaching JOG teaching	Stroke end: Automatic measurement Intermediate position: Direct teaching JOG teaching
	Acceleration/ Deceleration	Acceleration/deceleration during movement	●	●	●	Set in units of 1 mm/s²		Select from 16 levels	Select from 16 levels
	Pushing force	Rate of force during pushing operation	●	●	●	Set in units of 1%	Set in units of 1%	Select from 3 levels (weak, medium, and strong)	No setting required
	Trigger LV	Target force during pushing operation	△	●	●	Set in units of 1%	Set in units of 1%	No setting required (same value as pushing force)	
	Pushing speed	Speed during pushing operation	△	●	●	Set in units of 1 mm/s	Set in units of 1 mm/s	No setting required	
	Moving force	Force during positioning operation	△	●	●	Set to 100%	Set to (Different values for each actuator) %		
	Area output	Conditions for area output signal to turn ON	△	●	●	Set in units of 0.01 mm	Set in units of 0.01 mm		
	In position	[Position]: Width to the target position [Pushing]: How much it moves during pushing	△	●	●	Set to 0.5 mm or more (Units: 0.01 mm)	Set to (Different values for each actuator) or more (Units: 0.01 mm)		
Parameter setting (Excerpt)	Stroke (+)	+ side position limit	×	×	●	Set in units of 0.01 mm	Set in units of 0.01 mm		
	Stroke (–)	– side position limit	×	×	●	Set in units of 0.01 mm	Set in units of 0.01 mm		
	ORIG direction	Direction of the return to origin can be set.	×	×	●	Compatible	Compatible	Compatible	
	ORIG speed	Speed during return to origin	×	×	●	Set in units of 1 mm/s	Set in units of 1 mm/s	No setting required	
	ORIG ACC	Acceleration during return to origin	×	×	●	Set in units of 1 mm/s²	Set in units of 1 mm/s²		
Test	JOG		●	●	●	Continuous operation at the set speed can be tested while the switch is being pressed.	Continuous operation at the set speed can be tested while the switch is being pressed.	Hold down the MANUAL button (⌃⌄) for uniform sending (speed is a specified value).	Hold down the MANUAL button (⌃⌄) for uniform sending (speed is a specified value).
	MOVE		×	●	●	Operation at the set distance and speed from the current position can be tested.	Operation at the set distance and speed from the current position can be tested.	Press the MANUAL button (⌃⌄) once for sizing operation (speed and sizing amount are specified values).	Press the MANUAL button (⌃⌄) once for sizing operation (speed and sizing amount are specified values).
	Return to ORIG		●	●	●	Compatible	Compatible	Compatible	Performed by the stroke endpoint operation when power is turned ON
	Test drive	Operation of the specified step data	●	●	● (Continuous operation)	Compatible	Not compatible	Compatible	Compatible
	Forced output	ON/OFF of the output terminal can be tested.	×	×	●	Compatible	Compatible	Not compatible	Not compatible
Monitor	DRV mon	Current position, speed, force, and the specified step data can be monitored.	●	●	●	Compatible	Compatible		
	In/Out mon	Current ON/OFF status of the input and output terminal can be monitored.	×	×	●	Compatible	Compatible		
ALM	Status	Alarm currently being generated can be confirmed.	●	●	●	Compatible	Compatible	Compatible (display alarm group)	Compatible (display alarm group)
	ALM Log record	Alarms generated in the past can be confirmed.	×	×	●	Compatible	Compatible	Not compatible	Not compatible
File	Save/Load	Step data and parameters can be saved, forwarded, and deleted.	×	×	●	Compatible	Compatible		
Other	Language	Can be changed to Japanese or English	●	●	●	Compatible	Compatible		

△: Can be set from TB Ver. 2.** (The version information is displayed on the initial screen.)

*1 The LECP1 programless type cannot be used with the teaching box and controller setting kit.

Fieldbus Network

EtherCAT/EtherNet/IP™/PROFINET/ DeviceNet®/IO-Link/CC-Link Direct Input Type Step Motor Controller/JXC□ Series p. 741

ACT 2 Controller Setting Software ACT Controller 2

EtherCAT EtherNet/IP PROFINET DeviceNet IO-Link CC-Link



JXCE1 JXC91 JXCP1 JXCD1 JXCL1 JXCLF JXCM1

◎Two types of operation command

Step no. defined operation: Operate using the preset step data in the controller.
Numerical data defined operation: The actuator operates using values such as position and speed from the PLC.

◎Numerical monitoring available

Numerical information, such as the current speed, current position, and alarm codes, can be monitored on the PLC.

◎Transition wiring of communication cables

Two communication ports are provided.
* For the DeviceNet® type and CC-Link type, transition wiring is possible using a branch connector.
* 1 to 1 in the case of IO-Link

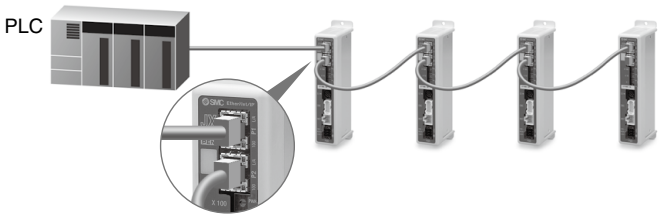

Application

Communication protocols

EtherCAT EtherNet/IP PROFINET DeviceNet IO-Link CC-Link

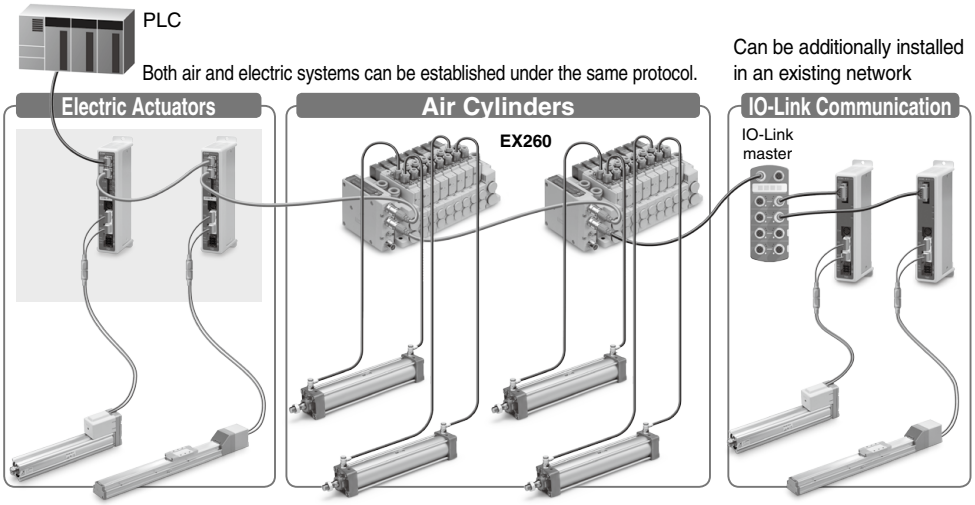

ACT 2 Controller Setting Software ACT Controller 2 From p. 1

Easy-to-use setting software ACT Controller 2 (For PC)

Various functions available in normal mode (Compared with the existing ACT Controller)

- Parameter and step data setting
- Alarm confirmation
- Waveform monitoring
- The JXC-BC writing tool
- Customizable plug-in functions

* Customers operating computers with specifications other than Windows 10/64 bit should use the existing ACT Controller.

Controller with STO Sub-Function JXC□F Series

Safety function/STO, SS1-t (EN 61800-5-2)

When the STO signal is input from the safety device, after the SS1-t operation is completed, the unit shifts to the STO operation and the power supply of the motor is turned OFF.

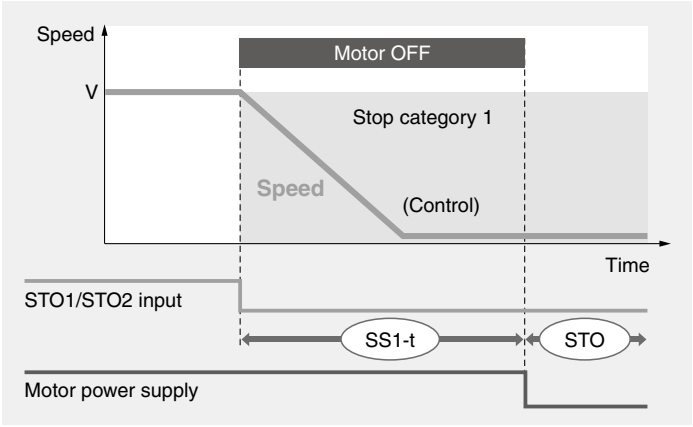

SS1-t operation: Safe Stop 1—After deceleration, a shift to the STO operation occurs.
STO operation: Safe Torque Off—The power supply of the motor is turned OFF.

External Device Connection Example

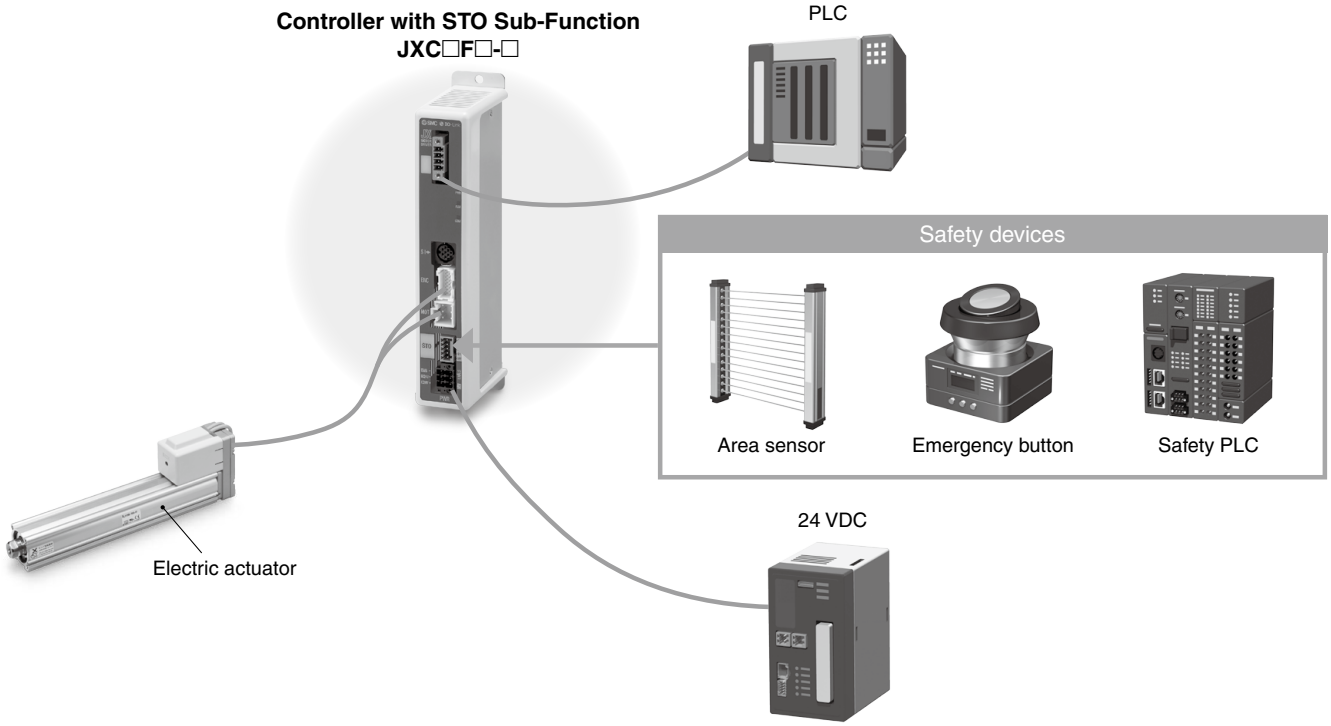

Certified by a third-party organization

Facilitates the safety designing of equipment and facilities (compliant with ISO/IEC standards)

EN 61508 SIL 3*1
EN 62061 SIL CL 3*1
EN ISO 13849-1 Cat. 3 PL e
EN 61800-5-2 STO, SS1-t

SIL (Safety Integrity Level)
A safety integrity level as defined by international standard IEC 61508/62061
There are 4 levels of safety, with the lowest being SIL 1 and the highest being SIL 4.

PL (Performance Level)
A scale used to define the capability of safety-related parts to perform a safety function as defined by international standard ISO 13849
There are 5 levels of safety function, with the lowest being PL a and the highest being PL e.

*1 The above safety integrity level is the max. value. The achievable level varies depending on the configuration and inspection method of the component. Be sure to refer to "Safety Manual: JXC#-OMY0009" for more information.

Multi-Axis Step Motor Controller

- **Speed tuning control**[*1]
  (3 Axes: JXC92 4 Axes: JXC73/83/93)
- **Linear/circular interpolation**

Linear interpolation

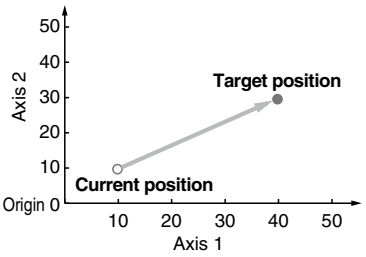

Circular interpolation

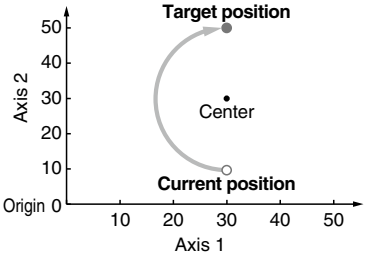

- **Positioning/pushing operation**
- **Step data input**
  (Max. 2048 points)
- **Space saving, reduced wiring**
- **Absolute/relative position coordinate instructions**

*1 This controls the speed of the following axis when the speed of the primary axis drops due to the effects of an external force and when a speed difference with the following axis occurs. This control is not for synchronizing the position of the primary axis and following axis.

For 3 Axes *JXC92 Series* p. 747

- **EtherNet/IP™ Type**
- **Width: Approx. 38% reduction**



JXC92

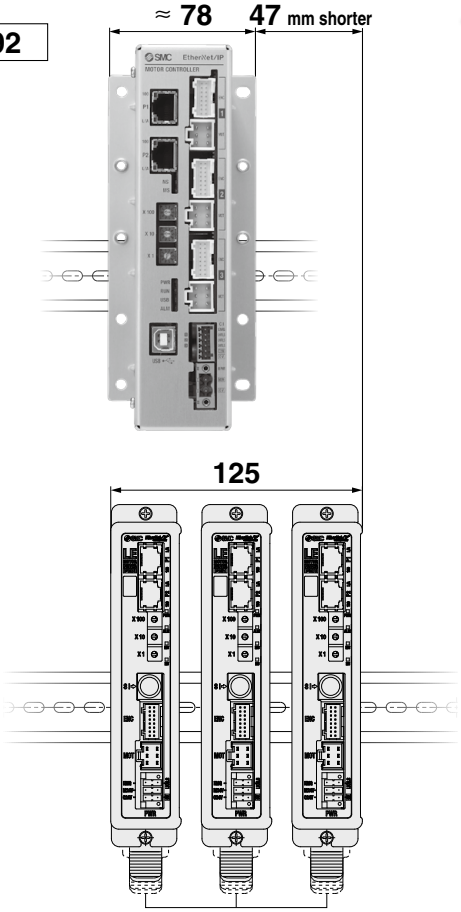

For 4 Axes *JXC73/83/93 Series* p. 749

- **Parallel I/O/**
  EtherNet/IP™ Type
- **Width: Approx. 18% reduction**



JXC73/83

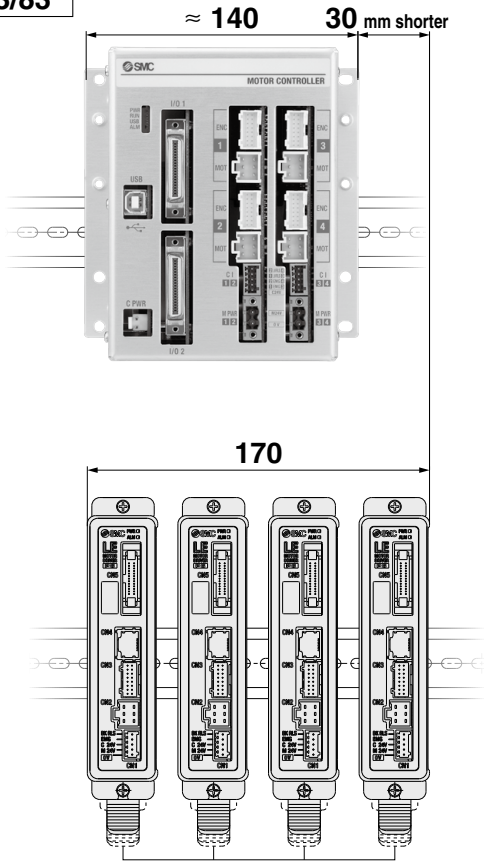

* For LE□, size 25 or larger

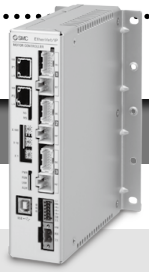

Step Data Input: Max. 2048 points

For 3 Axes

3-axis operation can be set collectively in one step.

Step	Axis	Movement mode	Speed	Position	Acceleration	Deceleration	Pushing force	Trigger LV	Pushing speed	Moving force	Area 1	Area 2	In position	Comments
			mm/s	mm	mm/s²	mm/s²					mm	mm	mm	
0	Axis 1	ABS	500	100.00	3000	3000	0	85.0	50	100.0	10.0	30.0	0.5	
	Axis 2	ABS	500	100.00	3000	3000	0	85.0	50	100.0	10.0	30.0	0.5	
	Axis 3	ABS	500	100.00	3000	3000	0	85.0	50	100.0	10.0	30.0	0.5	
1	Axis 1	INC	500	200.00	3000	3000	0	85.0	50	100.0	0	0	0.5	
	Axis 2	INC	500	200.00	3000	3000	0	85.0	50	100.0	0	0	0.5	
	Axis 3	INC	500	200.00	3000	3000	0	85.0	50	100.0	0	0	0.5	
⋮	⋮	⋮	⋮	⋮	⋮	⋮	⋮	⋮	⋮	⋮	⋮	⋮	⋮	
2046	Axis 1	SYN-I	500	100.00	3000	3000	0	0	0	100.0	0	0	0.5	
	Axis 2	SYN-I	0	0.00	0	0	0	0	0	100.0	0	0	0.5	
	Axis 3	SYN-I	0	0.00	0	0	0	0	0	100.0	0	0	0.5	
2047	Axis 1	CIR-R	500	0.00	3000	3000	0	0	0	100.0	0	0	0.5	
	Axis 2	CIR-R	0	50.00	0	0	0	0	0	100.0	0	0	0.5	
	Axis 3*1		0	0.00	0	0	0	0	0	100.0	0	0	0.5	
	Axis 4*1		0	25.00	0	0	0	0	0	100.0	0	0	0.5	

*1 When circular interpolation (CIR-R, CIR-L, CIR-3) is selected in the movement mode, input the X and Y coordinates in the rotation center position or input the X and Y coordinates in the passing position.

Movement mode	Pushing operation	Details
Blank	×	Invalid data (Invalid process)
ABS	○	Moves to the absolute coordinate position based on the origin of the actuator
INC	○	Moves to the relative coordinate position based on the current position
LIN-A	×	Moves to the absolute coordinate position based on the origin of the actuator by linear interpolation
LIN-I	×	Moves to the relative coordinate position based on the current position by linear interpolation
CIR-R*2	×	With Axis 1 assigned to the X-axis and Axis 2 to the Y-axis, it moves in the clockwise direction by circular interpolation. The target position and rotation center position are specified according to the relative coordinates from the current position. The position data is assigned as follows. Axis 1: Target position X Axis 2: Target position Y Axis 3*1: Rotation center position X Axis 4*1: Rotation center position Y
CIR-L*2	×	With Axis 1 assigned to the X-axis and Axis 2 to the Y-axis, it moves in the counter-clockwise direction by circular interpolation. The target position and rotation center position are specified according to the relative coordinates from the current position. The position data is assigned as follows. Axis 1: Target position X Axis 2: Target position Y Axis 3*1: Rotation center position X Axis 4*1: Rotation center position Y
SYN-I	×	Moves to the relative coordinate position based on the current position by speed tuning control*3
CIR-3*2	×	With Axis 1 assigned to the X-axis and Axis 2 to the Y-axis, it moves based on the three specified points by circular interpolation. The target position and passing position are specified according to the relative coordinates from the current position. The position data is assigned as follows. Axis 1: Target position X Axis 2: Target position Y Axis 3*1: Passing position X Axis 4*1: Passing position Y

*2 Performs a circular operation on a plane using Axis 1 and Axis 2

*3 This controls the speed of the following axis when the speed of the primary axis drops due to the effects of an external force and when a speed difference with the following axis occurs. This control is not for synchronizing the position of the primary axis and following axis.



For 4 Axes

4-axis operation can be set collectively in one step.

Step	Axis	Movement mode	Speed	Position	Acceleration	Deceleration	Positioning/ Pushing	Area 1	Area 2	In position	Comments
			mm/s	mm	mm/s²	mm/s²		mm	mm	mm	
0	Axis 1	ABS	100	200.00	1000	1000	0	6.0	12.0	0.5	
	Axis 2	ABS	50	100.00	1000	1000	0	6.0	12.0	0.5	
	Axis 3	ABS	50	100.00	1000	1000	0	6.0	12.0	0.5	
	Axis 4	ABS	50	100.00	1000	1000	0	6.0	12.0	0.5	
1	Axis 1	INC	500	250.00	1000	1000	1	0	0	20.0	
	Axis 2	INC	500	250.00	1000	1000	1	0	0	20.0	
	Axis 3	INC	500	250.00	1000	1000	1	0	0	20.0	
	Axis 4	INC	500	250.00	1000	1000	1	0	0	20.0	
⋮	⋮	⋮	⋮	⋮	⋮	⋮	⋮	⋮	⋮	⋮	⋮
2046	Axis 4	ABS	200	700	500	500	0	0	0	0.5	
2047	Axis 1	ABS	500	0.00	3000	3000	0	0	0	0.5	
	Axis 2	ABS	500	0.00	3000	3000	0	0	0	0.5	
	Axis 3	ABS	500	0.00	3000	3000	0	0	0	0.5	
	Axis 4	ABS	500	0.00	3000	3000	0	0	0	0.5	

Movement mode	Pushing operation	Details
Blank	×	Invalid data (Invalid process)
ABS	○	Moves to the absolute coordinate position based on the origin of the actuator
INC	○	Moves to the relative coordinate position based on the current position
LIN-A	×	Moves to the absolute coordinate position based on the origin of the actuator by linear interpolation
LIN-I	×	Moves to the relative coordinate position based on the current position by linear interpolation
CIR-R*1	×	With Axis 1 assigned to the X-axis and Axis 2 to the Y-axis, it moves in the clockwise direction by circular interpolation. The target position and rotation center position are specified according to the relative coordinates from the current position. The position data is assigned as follows. Axis 1: Target position X Axis 2: Target position Y Axis 3: Rotation center position X Axis 4: Rotation center position Y
CIR-L*1	×	With Axis 1 assigned to the X-axis and Axis 2 to the Y-axis, it moves in the counter-clockwise direction by circular interpolation. The target position and rotation center position are specified according to the relative coordinates from the current position. The position data is assigned as follows. Axis 1: Target position X Axis 2: Target position Y Axis 3: Rotation center position X Axis 4: Rotation center position Y
SYN-I	×	Moves to the relative coordinate position based on the current position by speed tuning control*2

*1 Performs a circular operation on a plane using Axis 1 and Axis 2

*2 This controls the speed of the following axis when the speed of the primary axis drops due to the effects of an external force and when a speed difference with the following axis occurs. This control is not for synchronizing the position of the primary axis and following axis.

● Controller Setting Software (Connection with a PC)

For 3 Axes	For 4 Axes
JXC92	JXC73/83/93

Easy file management

Load	The step data is loaded from the file.
Save	The step data is saved in a file.
Upload	The step data is loaded from the controller.
Download	The step data is written in the controller.

Abundant edit functions

Copy	The selected step data is copied to the clipboard.
Delete	The selected step data is deleted.
Cut	The selected step data is cut.
Paste (Insert)	The step data copied to the clipboard is inserted into the cursor's position.
Paste (Overwrite)	The step data copied to the clipboard overwrites the data at the cursor position.
Insert	A blank line is inserted in the selected step data line.

Operation confirmation of entered step data

0	Enter the step number to be executed.
▶	Executes the specified step number.
Stop	Displays whether the step number is being executed or stopped.
All axes return to origin	Performs a return to origin of all the valid axes.

Step data window

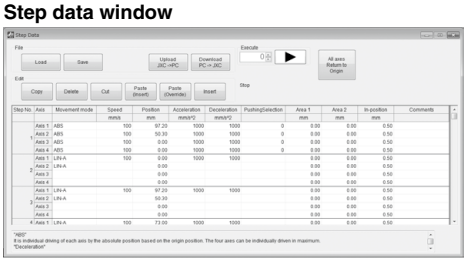

System Construction/General Purpose I/O

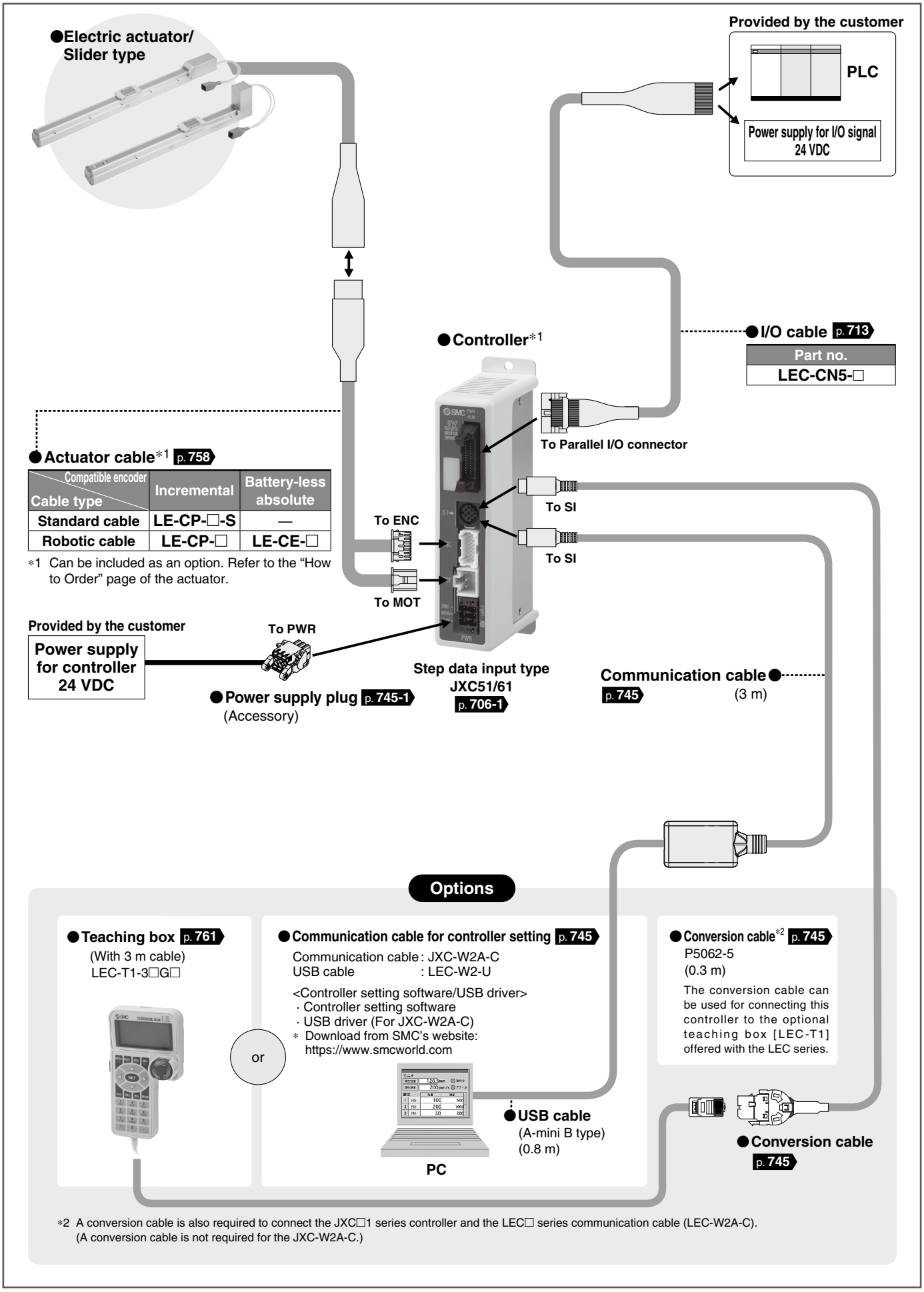

System Construction/General Purpose I/O

● **Electric actuator/ Slider type**

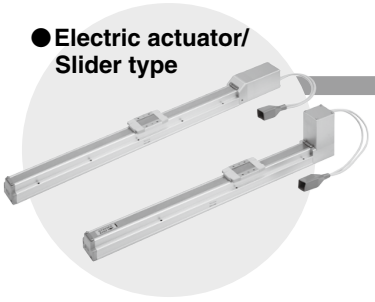

Provided by the customer

PLC

Power supply for I/O signal
24 VDC*1

● **I/O cable** p. 713, 724

Controller type	Part no.
LECA6	LEC-CN5-□
LECP1 (Programless)	LEC-CK4-□



Programless type
LECP1
p. 719

* The teaching box, controller setting kit, and Touch Operator Interface/Human-Machine Interface cannot be connected.

● **Controller***2

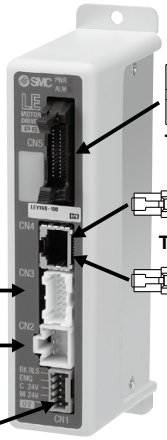

To CN5

To CN4

To CN3

To CN2

To CN1

Provided by the customer

Power supply for controller
24 VDC*1

*1 When compliance with UL is required, the electric actuator and controller should be used with a UL1310 Class 2 power supply.



● **Power supply plug** (Accessory)
<Applicable cable size>
AWG20 (0.5 mm²)

Step data input type
LECA6
p. 707

● **Touch Operator Interface/Human-Machine Interface (Provided by the customer)**

GP4501T/GP3500T
Schneider Electric Japan Holdings Ltd.

Pro-face for the best interface



Cockpit parts can be downloaded for free via the Pro-face website.
By using the cockpit parts, adjustments can be made from the Touch Operator Interface.

GOT2000 Series
Mitsubishi Electric Corporation

GOT2000 Graphic Operation Terminal



Sample screens for monitoring and changing the current value and set value of the electric actuator can be downloaded for free via the Mitsubishi Electric website.

● **Actuator cable***2 p. 758, 759

Controller type	Standard cable	Robotic cable
LECA6 (Step data input type)	—	LE-CA-□
LECP1 (Programless type)	LE-CP-□-S	LE-CP-□

*2 Can be included as an option. Refer to the "How to Order" page of the actuator.

Options

● **Teaching box** p. 761
(With 3 m cable)
LEC-T1-3JG□



or

● **Communication cable for controller setting** p. 760
Communication cable: LEC-W2A-C
USB cable: LEC-W2-U
Controller setting software
USB driver
* Download from SMC's website: https://www.smcworld.com

Communication cable ● (3 m)

● **USB cable**

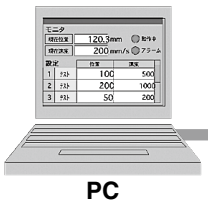

PC

* Cannot be used with the programless type (LECP1)

System Construction/Fieldbus Network

PLC
(Provided by the customer)

Power supply for gateway unit
24 VDC*1

Power supply

Fieldbus network

Gateway (GW) unit p. 715

Applicable Fieldbus protocols
CC-Link Ver. 2.0
DeviceNet™
PROFIBUS DP
EtherNet/IP™

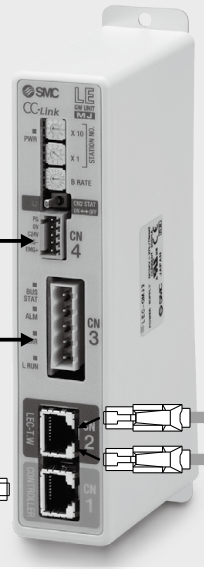

● Power supply connector (Accessory) → To CN4

● Communication connector (Accessory)*2 → To CN3

*2 CC-Link Ver. 2.0
DeviceNet™

To CN2

To CN1

● Communication cable p. 715
LEC-CG1-□

Options

● **Communication cable** p. 760
for controller setting
Communication cable: LEC-W2A-C
USB cable: LEC-W2-U

Controller setting software
USB driver
* Download from SMC's website:
https://www.smcworld.com

● Communication cable

USB cable ●

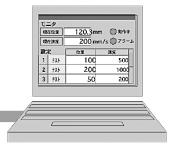

PC
(Provided by the customer)

or

● **Teaching box** p. 761
(With 3 m cable)
LEC-T1-3JG□



● Cable between branches p. 715
LEC-CG2-□

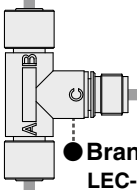

● Branch connector p. 715
LEC-CGD

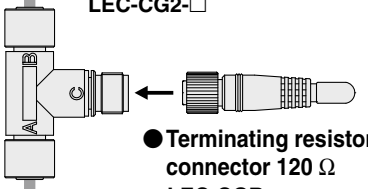

● Terminating resistor connector 120 Ω
LEC-CGR

● Communication cable p. 715
LEC-CG1-□

● Controller p. 707



To CN4

● Power supply connector (Accessory)

To CN1

Controller input power supply*1

● Controller p. 707



● Power supply connector (Accessory)

To CN1

Controller input power supply*1

Applicable Fieldbus protocols	Max. number of connectable controllers
CC-Link Ver. 2.0	12
DeviceNet™	8
PROFIBUS DP	5
EtherNet/IP™	12

Compatible Controllers

Servo motor controller (24 VDC)	**LECA6 Series**

*1 Connect the 0 V terminals for both the controller input power supply and the gateway unit power supply.
When compliance with UL is required, the electric actuator and controller should be used with a UL1310 Class 2 power supply.

● Electric actuator/
Slider type

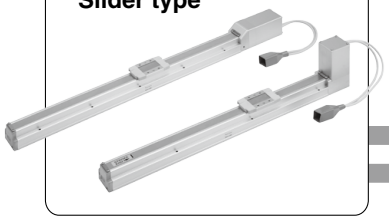

System Construction/Programless Type

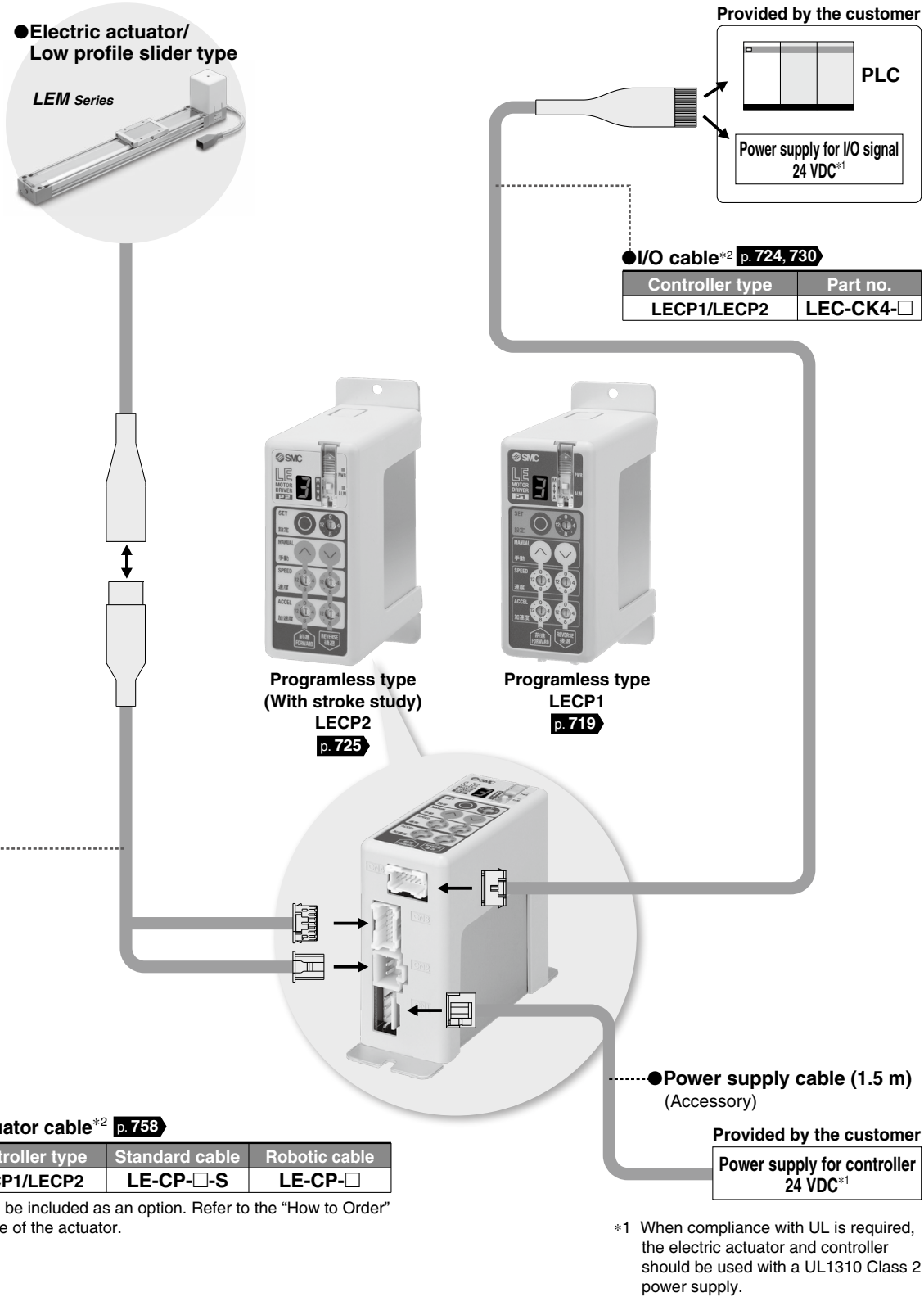

*2 Can be included as an option. Refer to the "How to Order" page of the actuator.

*1 When compliance with UL is required, the electric actuator and controller should be used with a UL1310 Class 2 power supply.

System Construction/Pulse Signal

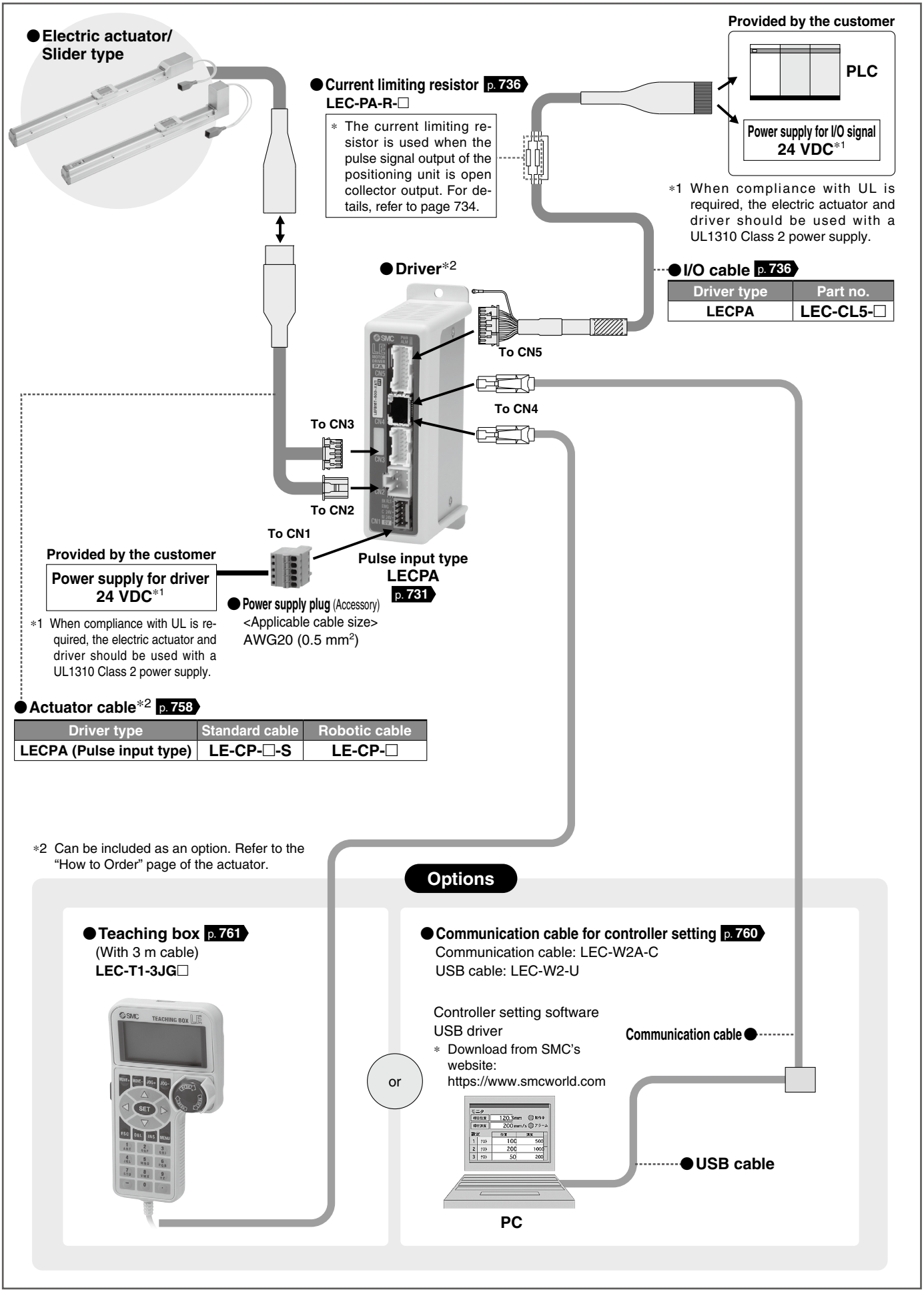

System Construction/Fieldbus Network
(EtherCAT/EtherNet/IP™/PROFINET/DeviceNet®/IO-Link/CC-Link Direct Input Type)

● **Actuator cable** p. 758

Cable type \ Compatible encoder	Incremental	Battery-less absolute
Standard cable	LE-CP-□-S	—
Robotic cable	LE-CP-□	LE-CE-□

● **Electric actuator**



LEY/LEYG Series
LEF Series
LES/LESH Series
LER Series
LEL Series
LEPY/LEPS Series
LEH Series
LEM Series

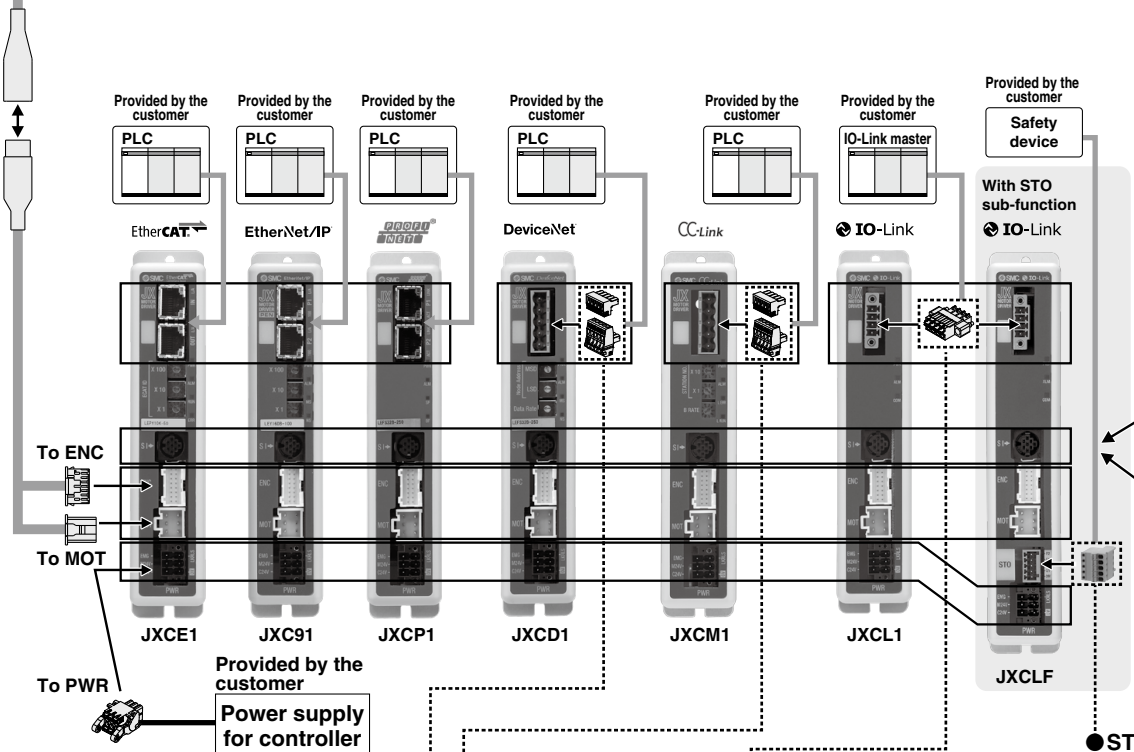

● **Power supply plug** p. 745-1
(Accessory)

● **Communication plug connector for DeviceNet®** p. 745-1

Straight type	JXC-CD-S
T-branch type	JXC-CD-T

● **Communication plug connector for CC-Link** p. 745-1

Straight type	LEC-CMJ-S
T-branch type	LEC-CMJ-T

● **Communication plug connector for IO-Link** p. 745-1

Straight type	JXC-CL-S

(Accessory)

● **STO signal plug JXC-CSTO**
(Accessory) p. 745-1

Communication cable ● (3 m)
p. 745

Options

● **Teaching box** p. 745
(With 3 m cable)
LEC-T1-3□G□



or

● **Communication cable for controller setting** p. 745
Communication cable: JXC-W2A-C
USB cable: LEC-W2-U
<Controller setting software/USB driver>
· Controller setting software
· USB driver (For JXC-W2A-C)
∗ Download from SMC's website: https://www.smcworld.com

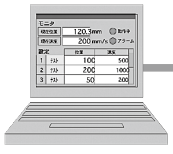

PC

● **USB cable**
(A-mini B type)
(0.8 m)

● **Conversion cable**[*1] p. 745
P5062-5
(0.3 m)
The conversion cable can be used for connecting this controller to the optional teaching box [LEC-T1] offered with the LEC series.

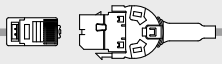

● **Conversion cable**
p. 745

∗1 A conversion cable is also required to connect the JXC□□ series controller and the LEC□ series communication cable (LEC-W2A-C).
(A conversion cable is not required for the JXC-W2A-C.)

System Construction/EtherNet/IP™ Type (JXC92)

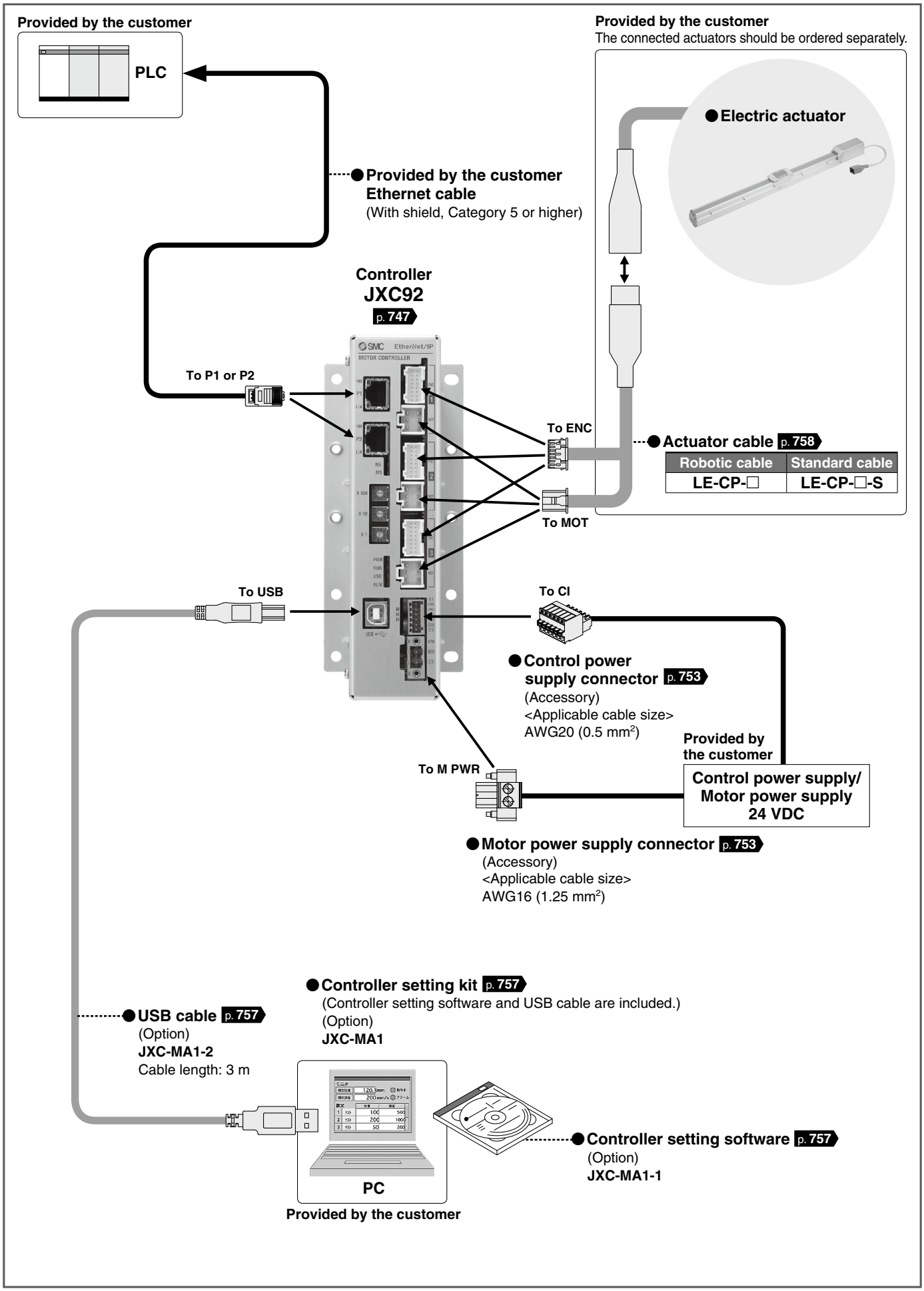

System Construction/Parallel I/O (JXC73/83)

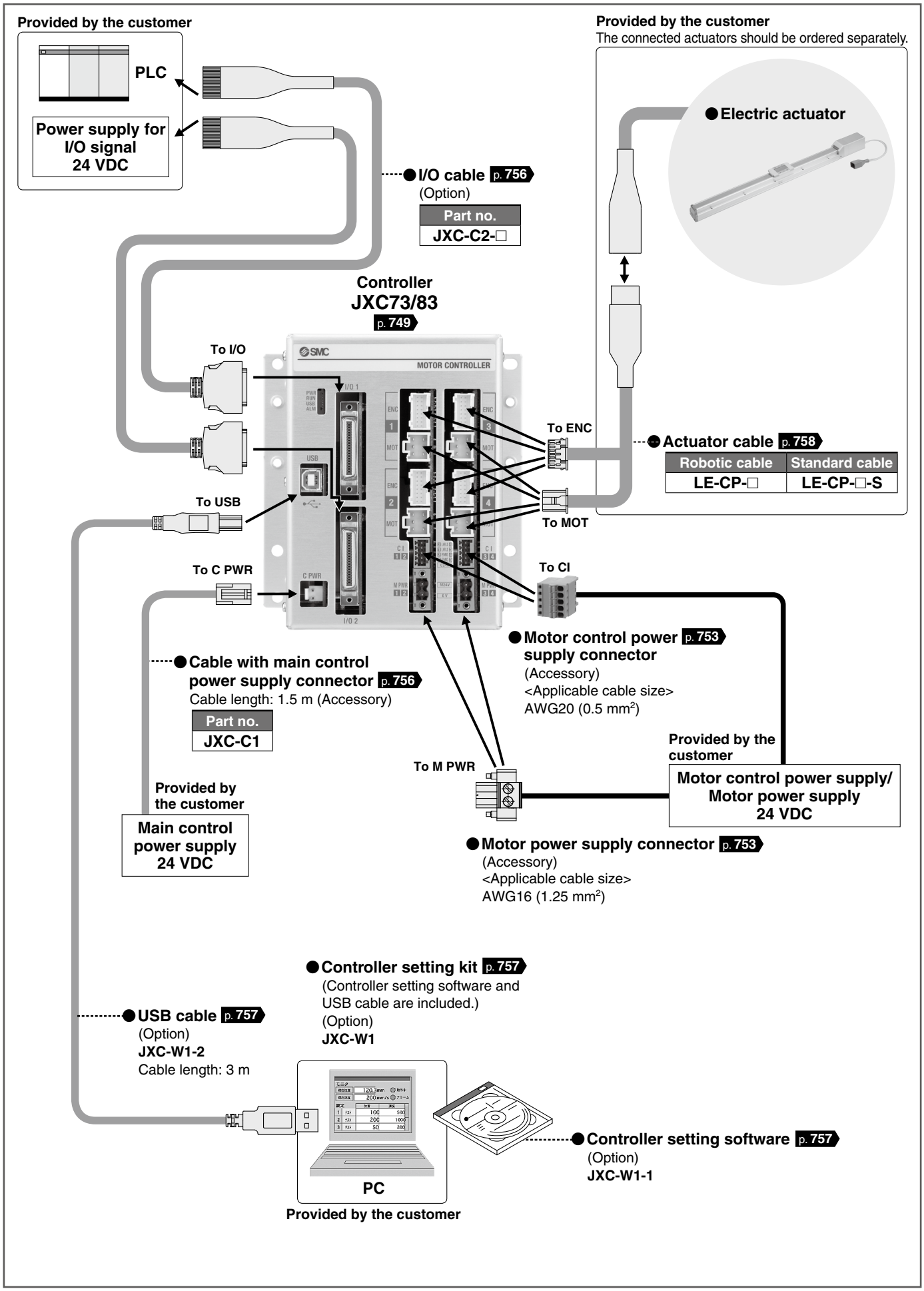

System Construction/EtherNet/IP™ Type (JXC93)

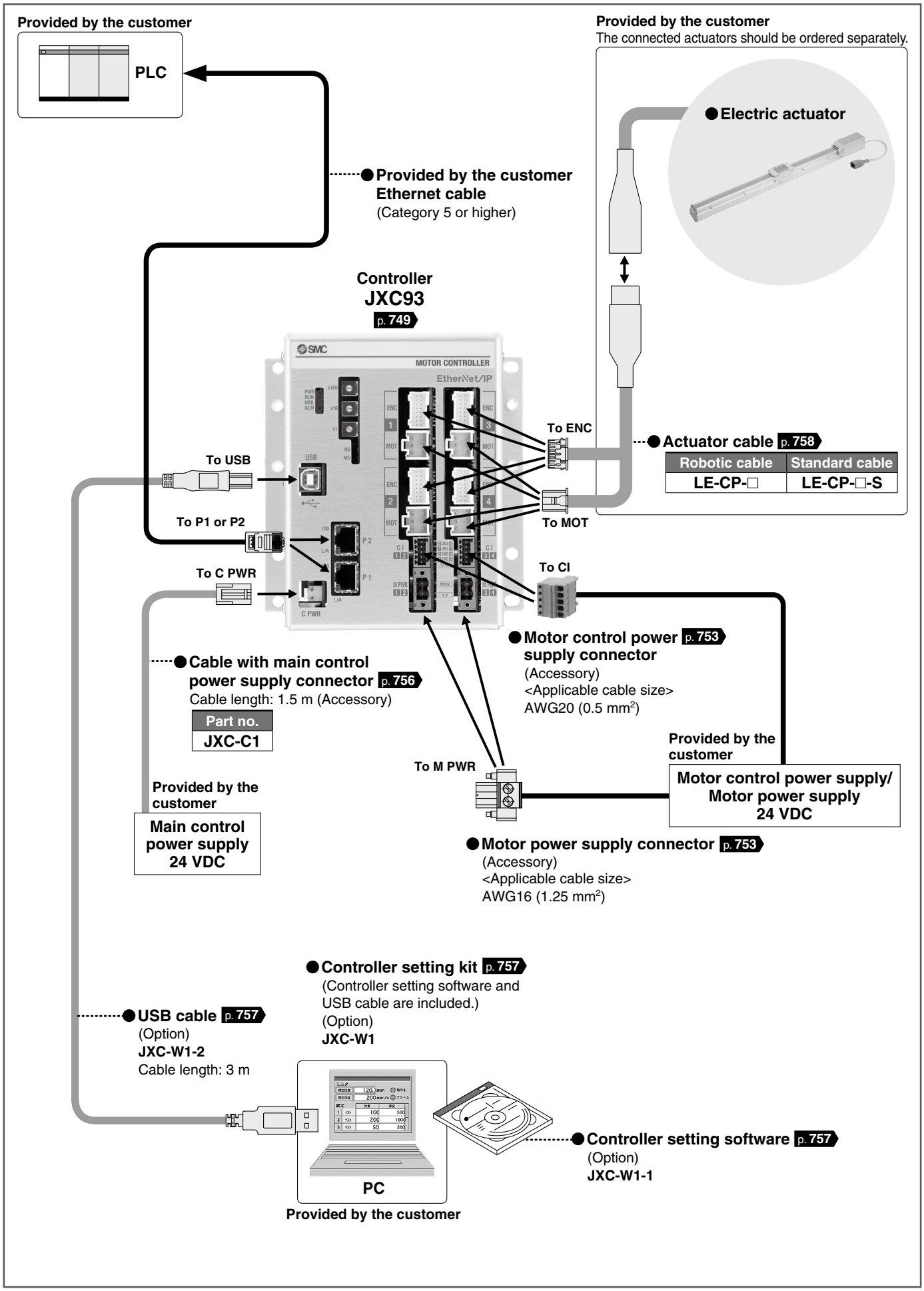

Step Motor (Servo/24 VDC)/Servo Motor (24 VDC) Controllers/Drivers


JXC51/61 LECA6


LEC-G

Step Data Input Type/***JXC51/61 Series*** ..... p. 706-1

Step Data Input Type/***LECA6 Series*** ..... p. 707

Gateway Unit/***LEC-G Series*** ..... p. 715

Programless Controller/***LECP1 Series*** ..... p. 719


LECP1


LECP2

Programless Controller (With Stroke Study)/
LECP2 Series ..... p. 725


LECPA

Step Motor Driver/***LECPA Series*** ..... p. 731


JXCE1/91/P1/D1/L□/M1

EtherCAT/EtherNet/IP™/PROFINET/DeviceNet®/IO-Link/CC-Link
Direct Input Type/***JXCE1/91/P1/D1/L□/M1 Series*** ..... p. 741

Precautions Relating to Differences in Controller Versions ..... p. 746


JXC92

3-Axis Step Motor Controller/***JXC92 Series*** ..... p. 747


JXC73/83 JXC93

4-Axis Step Motor (Servo/24 VDC) Controller/
JXC73/83/93 Series ..... p. 749

Actuator Cable ..... p. 758

Communication Cable for Controller Setting/***LEC-W2A-□*** ..... p. 760


LEC-T1

Teaching Box/***LEC-T1*** ..... p. 761

Compatible actuators

LEF LEL LEM
LEY LES LEP
LER LEH

Controller (Step Data Input Type)

JXC51/61 Series

Click here for details.

RoHS



How to Order

JXC 5 1 7 1 – ☐

❶ ❷ ❸ ❹

❶ Parallel I/O type

5	NPN
6	PNP

❷ Mounting

7	Screw mounting
8*1	DIN rail

*1 The DIN rail is not included. Order it separately.

❸ I/O cable length [m]

Nil	None
1	1.5
3	3
5	5

❹ Actuator part number

Without cable specifications and actuator options
Example: Enter "LEFS25B-100" for the LEFS25B-100B-R1☐☐.

BC	Blank controller*1

*1 Requires dedicated software (JXC-BCW)
Refer to page 746-1 for the applicable controller version for the battery-less absolute type

The controller is sold as single unit after the compatible actuator is set.

Confirm that the combination of the controller and actuator is correct.

<Check the following before use.>

① Check the actuator label for the model number. This number should match that of the controller.

② Check that the Parallel I/O configuration matches (NPN or PNP).

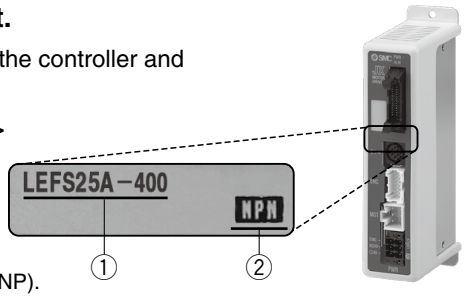

* Refer to the operation manual for using the products. Please download it via our website, https://www.smcworld.com

Precautions for blank controllers (JXC☐1☐☐-BC)

A blank controller is a controller to which the customer can write the data of the actuator it is to be combined and used with. Use the dedicated software (JXC-BCW) for data writing.

- Please download the dedicated software (JXC-BCW) via our website.
- Order the communication cable for controller setting (JXC-W2A-C) separately to use this software.

SMC website
https://www.smcworld.com

Specifications

Model	JXC51 JXC61
Compatible motor	Step motor (Servo/24 VDC)
Power supply	Power voltage: 24 VDC ±10%
Current consumption (Controller)	100 mA or less
Compatible encoder	Incremental, Battery-less absolute (Refer to page 746-1 for the applicable controller version.)
Parallel input	11 inputs (Photo-coupler isolation)
Parallel output	13 outputs (Photo-coupler isolation)
Serial communication	RS485 (Only for the LEC-T1 and JXC-W2)
Memory	EEPROM
LED indicator	PWR, ALM
Cable length [m]	Actuator cable: 20 or less
Cooling system	Natural air cooling
Operating temperature range [°C]	0 to 55°C (No freezing)
Operating humidity range [%RH]	90 or less (No condensation)
Insulation resistance [MΩ]	Between all external terminals and the case: 50 (50 VDC)
Weight [g]	150 (Screw mounting), 170 (DIN rail mounting)

SMC

How to Mount

a) Screw mounting (JXC□17□-□)
(Installation with two M4 screws)

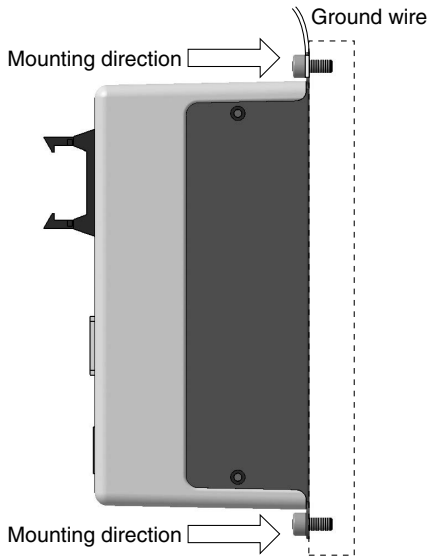

b) DIN rail mounting (JXC□18□-□)
(Installation with the DIN rail)

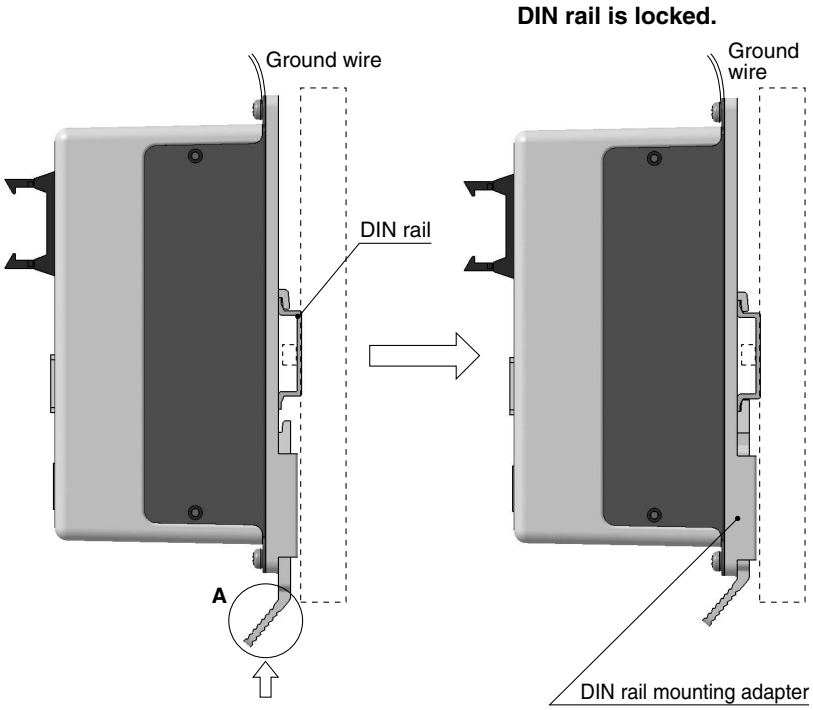

Hook the controller on the DIN rail and press the lever of section **A** in the arrow direction to lock it.

∗ When size 25 or more of the LE series are used, the space between the controllers should be 10 mm or more.

DIN rail
AXT100-DR-□

∗ For □, enter a number from the No. line in the table below.
Refer to the dimension drawings on page 706-3 for the mounting dimensions.

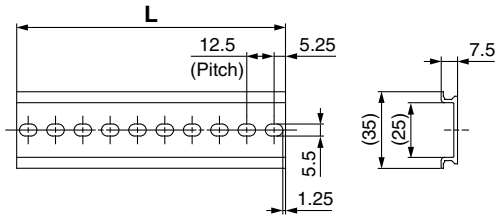

L Dimensions [mm]

No.	1	2	3	4	5	6	7	8	9	10	11	12	13	14	15	16	17	18	19	20
L	23	35.5	48	60.5	73	85.5	98	110.5	123	135.5	148	160.5	173	185.5	198	210.5	223	235.5	248	260.5
No.	21	22	23	24	25	26	27	28	29	30	31	32	33	34	35	36	37	38	39	40
L	273	285.5	298	310.5	323	335.5	348	360.5	373	385.5	398	410.5	423	435.5	448	460.5	473	485.5	498	510.5

DIN rail mounting adapter
LEC-D0 (with 2 mounting screws)

This should be used when the DIN rail mounting adapter is mounted onto a screw mounting type controller afterward.

Dimensions

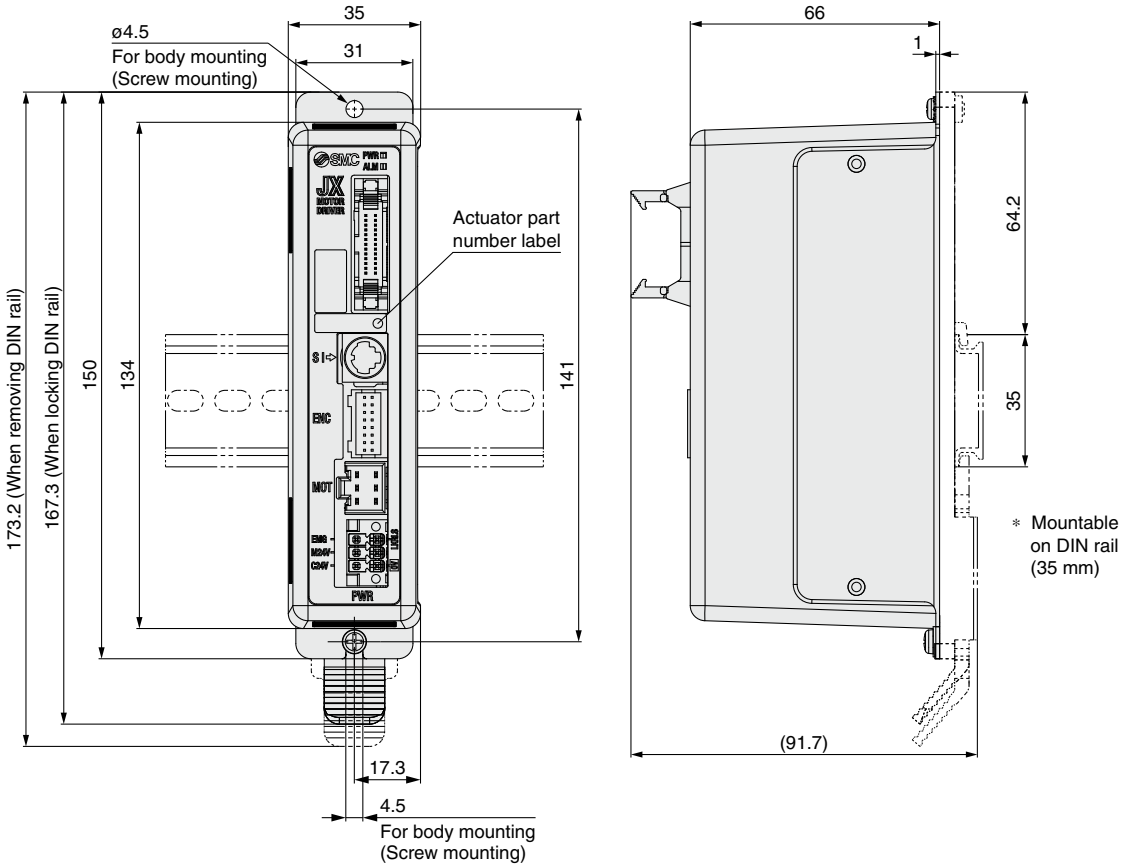
35
31
ø4.5
For body mounting
(Screw mounting)
Actuator part
number label
173.2 (When removing DIN rail)
167.3 (When locking DIN rail)
150
134
141
17.3
4.5
For body mounting
(Screw mounting)
66
1
64.2
35
* Mountable
on DIN rail
(35 mm)
(91.7)

Wiring Example 1

Parallel I/O Connector

* When you connect a PLC to the parallel I/O connector, use the I/O cable (LEC-CN5-□).
* The wiring changes depending on the type of parallel I/O (NPN or PNP).

Wiring diagram

JXC51□□-□ (NPN)

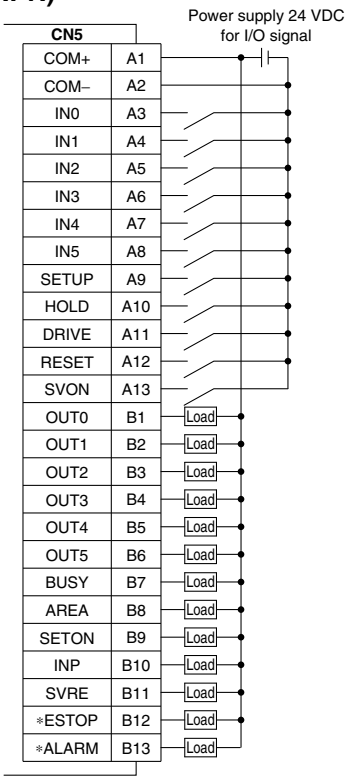

JXC61□□-□ (PNP)

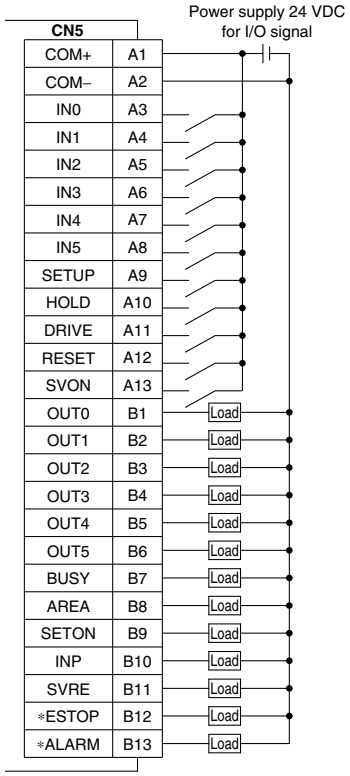

Input Signal

Name	Details
COM+	Connects the power supply 24 V for input/output signal
COM–	Connects the power supply 0 V for input/output signal
IN0 to IN5	Step data specified bit no. (Input is instructed by combining IN0 to 5.)
SETUP	Instruction to return to origin
HOLD	Temporarily stops operation
DRIVE	Instruction to drive
RESET	Resets alarm and interrupts operation
SVON	Servo ON instruction

Output Signal

Name	Details
OUT0 to OUT5	Outputs the step data no. during operation
BUSY	Outputs when the actuator is moving
AREA	Outputs within the step data area output setting range
SETON	Outputs when returning to origin
INP	Outputs when target position or target force is reached (Turns on when the positioning or pushing is completed.)
SVRE	Outputs when servo is on
*ESTOP*1	OFF when EMG stop is instructed
*ALARM*1	OFF when alarm is generated

*1 Signal of negative-logic circuit (N.C.)

Step Data Setting

1. Step data setting for positioning

In this setting, the actuator moves toward and stops at the target position.
The following diagram shows the setting items and operation.
The setting items and set values for this operation are stated below.

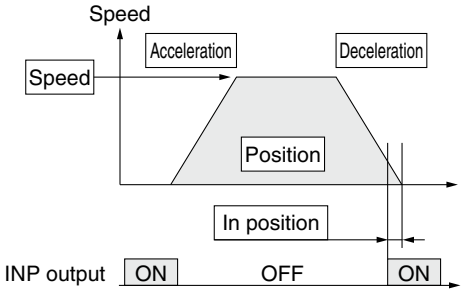

◎: Need to be set.
○: Need to be adjusted as required.
—: Setting is not required.

Step Data (Positioning)

Necessity	Item	Details
◎	Movement MOD	When the absolute position is required, set Absolute. When the relative position is required, set Relative.
◎	Speed	Transfer speed to the target position
◎	Position	Target position
○	Acceleration	Parameter which defines how rapidly the actuator reaches the speed set. The higher the set value, the faster it reaches the speed set.
○	Deceleration	Parameter which defines how rapidly the actuator comes to stop. The higher the set value, the quicker it stops.
◎	Pushing force	Set 0. (If values 1 to 100 are set, the operation will be changed to the pushing operation.)
—	Trigger LV	Setting is not required.
—	Pushing speed	Setting is not required.
○	Moving force	Max. torque during the positioning operation (No specific change is required.)
○	Area 1, Area 2	Condition that turns on the AREA output signal.
○	In position	Condition that turns on the INP output signal. When the actuator enters the range of [in position], the INP output signal turns on. (It is unnecessary to change this from the initial value.) When it is necessary to output the arrival signal before the operation is completed, make the value larger.

2. Step data setting for pushing

The actuator moves toward the pushing start position, and when it reaches that position, it starts pushing with the set force or less.
The following diagram shows the setting items and operation.
The setting items and set values for this operation are stated below.

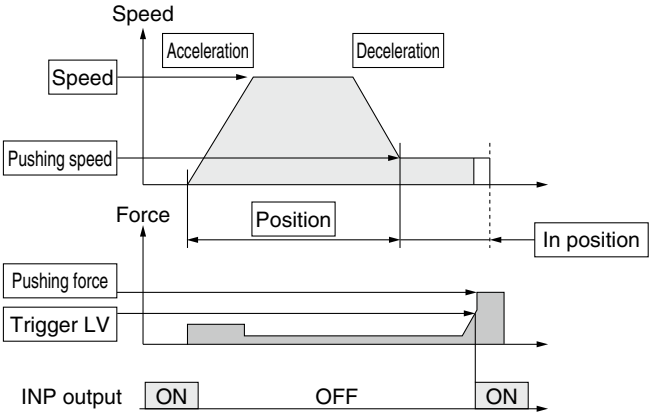

◎: Need to be set.
○: Need to be adjusted as required.

Step Data (Pushing)

Necessity	Item	Details
◎	Movement MOD	When the absolute position is required, set Absolute. When the relative position is required, set Relative.
◎	Speed	Transfer speed to the pushing start position
◎	Position	Pushing start position
○	Acceleration	Parameter which defines how rapidly the actuator reaches the speed set. The higher the set value, the faster it reaches the speed set.
○	Deceleration	Parameter which defines how rapidly the actuator comes to stop. The higher the set value, the quicker it stops.
◎	Pushing force	Pushing force ratio is defined. The setting range differs depending on the electric actuator type. Refer to the operation manual for the electric actuator.
◎	Trigger LV	Condition that turns on the INP output signal. The INP output signal turns on when the generated force exceeds the value. Trigger level should be the pushing force or less.
○	Pushing speed	Pushing speed during pushing. When the speed is set fast, the electric actuator and workpieces might be damaged due to the impact when they hit the end, so this set value should be smaller. Refer to the operation manual for the electric actuator.
○	Moving force	Max. torque during the positioning operation (No specific change is required.)
○	Area 1, Area 2	Condition that turns on the AREA output signal.
◎	In position	Transfer distance during pushing. If the transferred distance exceeds the setting, it stops even if it is not pushing. If the transfer distance is exceeded, the INP output signal will not turn on.

Signal Timing

Return to Origin

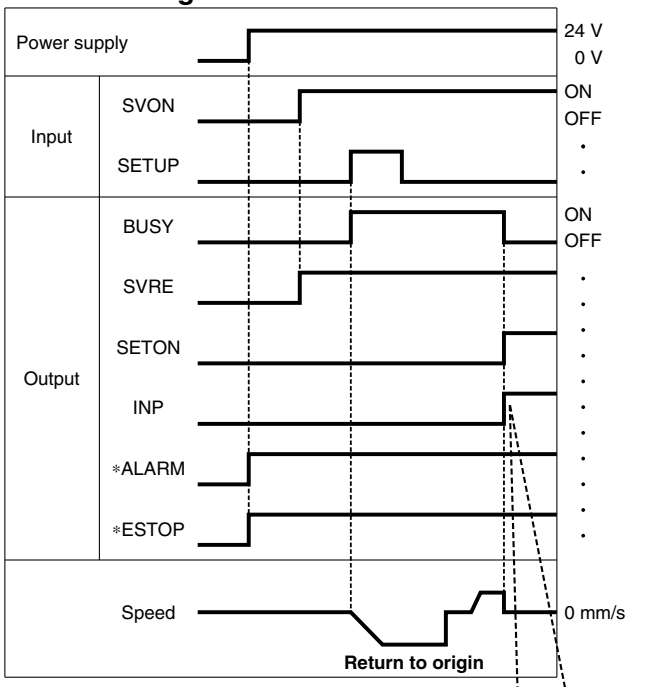

∗ "∗ALARM" and "∗ESTOP" are expressed as negative-logic circuits.

Positioning Operation

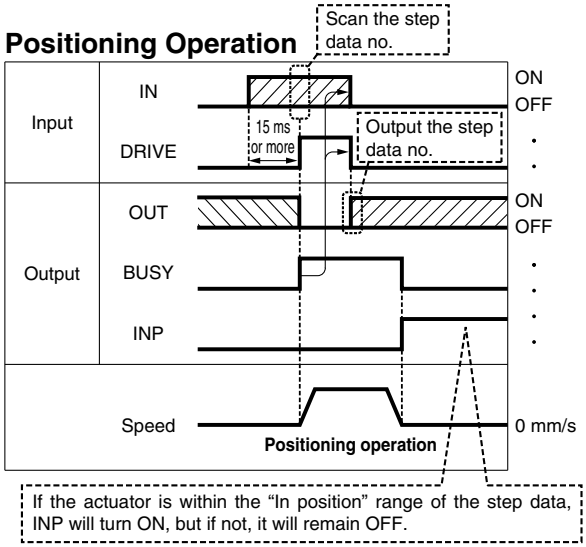

∗ "OUT" is output when "DRIVE" is changed from ON to OFF.
Refer to the operation manual for details on the controller for the LEM series.
(When power supply is applied, "DRIVE" or "RESET" is turned ON or "∗ESTOP" is turned OFF, all of the "OUT" outputs are OFF.)

Pushing Operation

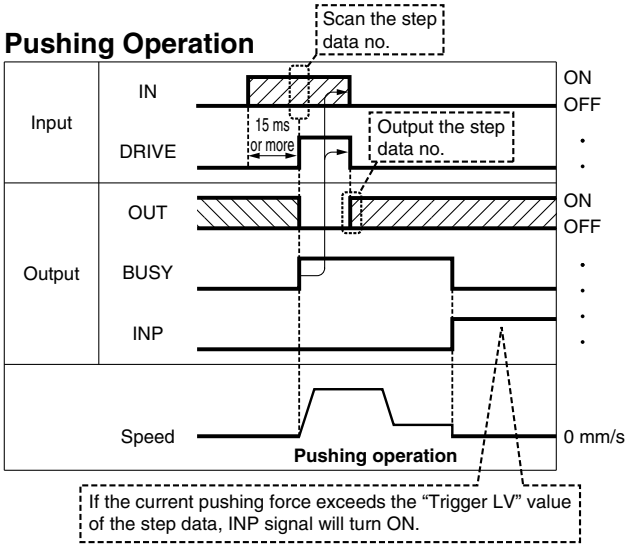

HOLD

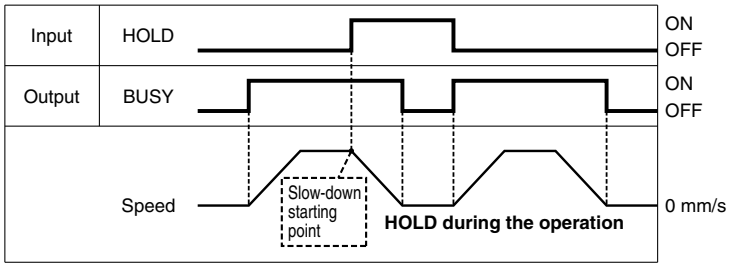

∗ When the actuator is within the "In position" range in the pushing operation, it does not stop even if HOLD signal is input.

Reset

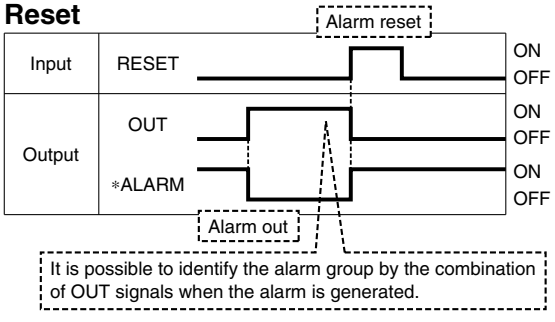

∗ "∗ALARM" is expressed as a negative-logic circuit.

Options

■ Power supply plug JXC-CPW

∗ The power supply plug is an accessory.
<Applicable cable size> AWG20 (0.5 mm²), cover diameter 2.0 mm or less

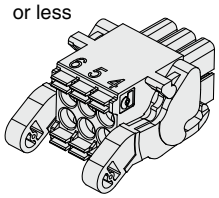

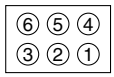

① C 24V ④ 0V
② M 24V ⑤ N.C.
③ EMG ⑥ LK RLS

Power supply plug terminal

Terminal name	Function	Details
0V	Common supply (–)	The M 24V terminal, C 24V terminal, EMG terminal, and LK RLS terminal are common (–).
M 24V	Motor power supply (+)	Motor power supply (+) of the controller
C 24V	Control power supply (+)	Control power supply (+) of the controller
EMG	Stop (+)	Connection terminal of the external stop circuit
LK RLS	Lock release (+)	Connection terminal of the lock release switch

■ Communication cable for controller setting

• Controller setting software
• USB driver
Download from SMC's website:
https://www.smcworld.com

Hardware Requirements

OS	Windows®7, Windows®8.1, Windows®10
Communication interface	USB 1.1 or USB 2.0 ports
Display	1024 x 768 or more

∗ Windows®7, Windows®8.1, and Windows®10 are registered trademarks of Microsoft Corporation in the United States.

① Communication cable JXC-W2A-C

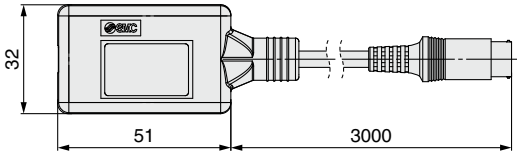

∗ It can be connected to the controller directly.

② USB cable LEC-W2-U

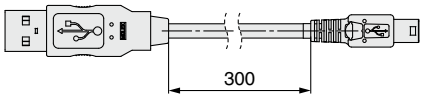

③ Controller setting kit JXC-W2A

A set which includes a communication cable (JXC-W2A-C) and a USB cable (LEC-W2-U)

■ Teaching box

LEC – T1 – 3 J G □

Teaching box

Cable length [m]

3	3

Initial language

J	Japanese
E	English

∗ The displayed language can be changed to English or Japanese.

Enable switch

Nil	None
S	Equipped with enable switch

∗ Interlock switch for jog and test function

Stop switch

G	Equipped with stop switch



Specifications

Item	Description
Switch	Stop switch, Enable switch (Option)
Cable length [m]	3
Enclosure	IP64 (Except connector)
Operating temperature range [°C]	5 to 50
Operating humidity range [%RH]	90 or less (No condensation)
Weight [g]	350 (Except cable)

■ Conversion cable P5062-5 (Cable length: 300 mm)

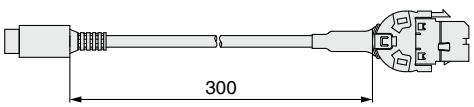

∗ To connect the teaching box (LEC-T1-3□G□) to the controller, a conversion cable is required.

Option: I/O Cable

LEC − CN5 − 1

Cable length (L) [m]

1	1.5
3	3
5	5

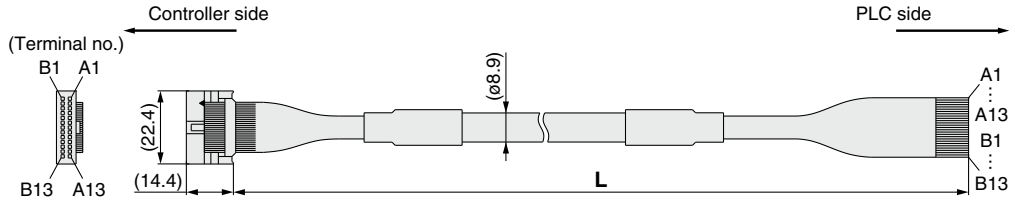

Connector pin no.	Insulation color	Dot mark	Dot color
A1	Light brown	■	Black
A2	Light brown	■	Red
A3	Yellow	■	Black
A4	Yellow	■	Red
A5	Light green	■	Black
A6	Light green	■	Red
A7	Gray	■	Black
A8	Gray	■	Red
A9	White	■	Black
A10	White	■	Red
A11	Light brown	■ ■	Black
A12	Light brown	■ ■	Red
A13	Yellow	■ ■	Black

Connector pin no.	Insulation color	Dot mark	Dot color
B1	Yellow	■ ■	Red
B2	Light green	■ ■	Black
B3	Light green	■ ■	Red
B4	Gray	■ ■	Black
B5	Gray	■ ■	Red
B6	White	■ ■	Black
B7	White	■ ■	Red
B8	Light brown	■ ■ ■	Black
B9	Light brown	■ ■ ■	Red
B10	Yellow	■ ■ ■	Black
B11	Yellow	■ ■ ■	Red
B12	Light green	■ ■ ■	Black
B13	Light green	■ ■ ■	Red
—	Shield		

∗ Conductor size: AWG28

Weight

Product no.	Weight [g]
LEC-CN5-1	170
LEC-CN5-3	320
LEC-CN5-5	520

Compatible actuators

LEF LEY LES

Controller (Step Data Input Type)
Servo Motor (24 VDC)
LECA6 Series



LECA6 Series

Click here for details.

How to Order

LE C A 6 N □ □ – □

Controller

Compatible motor

A	Servo motor (24 VDC)

Number of step data (Points)

6	64

Parallel I/O type

N	NPN
P	PNP

I/O cable length [m]

Nil	Without cable
1	1.5
3	3
5	5

Option

Nil	Screw mounting
D∗1	DIN rail mounting

∗1 The DIN rail is not included. It must be ordered separately.

Actuator part number

Without cable specifications and actuator options
Example: Enter "**LEFS16AA-400**" for the LEFS16AA-400B-R16N1.

BC	Blank controller∗1

∗1 Requires dedicated software (LEC-BCW)

∗ When controller equipped type is selected when ordering the LE series, you do not need to order this controller.

⚠Caution

[CE-compliant products]

① EMC compliance was tested by combining the electric actuator LE series and the controller LEC series.
The EMC depends on the configuration of the customer's control panel and the relationship with other electrical equipment and wiring. Therefore, compliance with the EMC directive cannot be certified for SMC components incorporated into the customer's equipment under actual operating conditions. As a result, it is necessary for the customer to verify compliance with the EMC directive for the machinery and equipment as a whole.

② For the LECA6 series (servo motor controller), EMC compliance was tested by installing a noise filter set (LEC-NFA). Refer to page 713 for the noise filter set. Refer to the LECA Operation Manual for installation.

[UL-compliant products]

When compliance with UL is required, the electric actuator and controller should be used with a UL1310 Class 2 power supply.

The controller is sold as single unit after the compatible actuator is set.

Confirm that the combination of the controller and actuator is correct.

<Check the following before use.>

① Check the actuator label for the model number. This number should match that of the controller.

② Check that the Parallel I/O configuration matches (NPN or PNP).

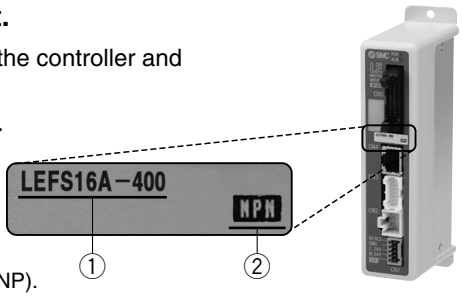

∗ Refer to the operation manual for using the products. Please download it via our website: https://www.smcworld.com

Precautions for blank controllers (LEC□6□□-BC)

A blank controller is a controller to which the customer can write the data of the actuator it is to be combined and used with. Use the dedicated software (LEC-BCW) for data writing.

- Please download the dedicated software (LEC-BCW) via our website.
- Order the communication cable for controller setting (LEC-W2A-C) separately to use this software.

SMC website:
https://www.smcworld.com

Specifications

Basic Specifications

Item	LECA6
Compatible motor	Servo motor (24 VDC)
Power supply∗1	Power voltage: 24 VDC ±10%∗2 [Including motor drive power, control power, stop, lock release]
Parallel input	11 inputs (Photo-coupler isolation)
Parallel output	13 outputs (Photo-coupler isolation)
Compatible encoder	Incremental
Serial communication	RS485 (Modbus protocol compliant)
Memory	EEPROM
LED indicator	LED (Green/Red) one of each
Lock control	Forced-lock release terminal∗3
Cable length [m]	I/O cable: 5 or less, Actuator cable: 20 or less
Cooling system	Natural air cooling
Operating temperature range [°C]	0 to 40 (No freezing)
Operating humidity range [%RH]	90 or less (No condensation)
Storage temperature range [°C]	−10 to 60 (No freezing)
Storage humidity range [%RH]	90 or less (No condensation)
Insulation resistance [MΩ]	Between the housing and SG terminal: 50 (500 VDC)
Weight [g]	150 (Screw mounting), 170 (DIN rail mounting)

∗1 Do not use the power supply of "inrush current prevention type" for the controller power supply. When compliance with UL is required, the electric actuator and controller should be used with a UL1310 Class 2 power supply.

∗2 The power consumption changes depending on the actuator model. Refer to the specifications of actuator for more details.

∗3 Applicable to non-magnetizing locks

SMC

How to Mount

a) Screw mounting (LECA6□□-□)
(Installation with two M4 screws)

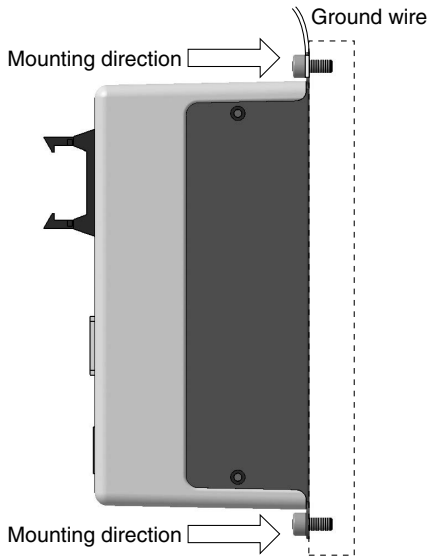

b) DIN rail mounting (LECA6□□D-□)
(Installation with the DIN rail)

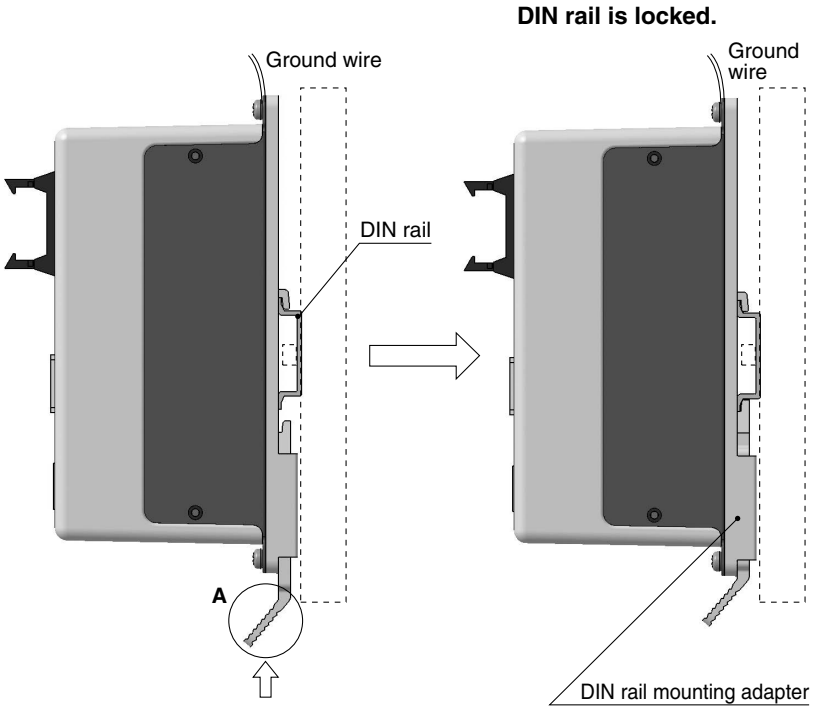

Hook the controller on the DIN rail and press the lever of section **A** in the arrow direction to lock it.

∗ When size 25 or more of the LE series are used, the space between the controllers should be 10 mm or more.

DIN rail
AXT100-DR-□

∗ For □, enter a number from the No. line in the table below.
Refer to the dimension drawings on page 709 for the mounting dimensions.

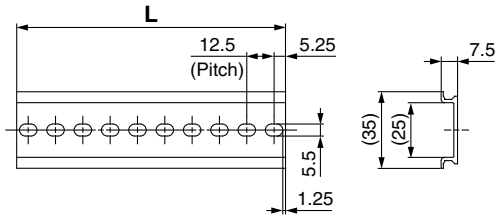

L Dimensions [mm]

No.	1	2	3	4	5	6	7	8	9	10	11	12	13	14	15	16	17	18	19	20
L	23	35.5	48	60.5	73	85.5	98	110.5	123	135.5	148	160.5	173	185.5	198	210.5	223	235.5	248	260.5
No.	21	22	23	24	25	26	27	28	29	30	31	32	33	34	35	36	37	38	39	40
L	273	285.5	298	310.5	323	335.5	348	360.5	373	385.5	398	410.5	423	435.5	448	460.5	473	485.5	498	510.5

DIN rail mounting adapter
LEC-D0 (with 2 mounting screws)

This should be used when the DIN rail mounting adapter is mounted onto a screw mounting type controller afterward.

Dimensions

a) Screw mounting (LECA6□□-□)

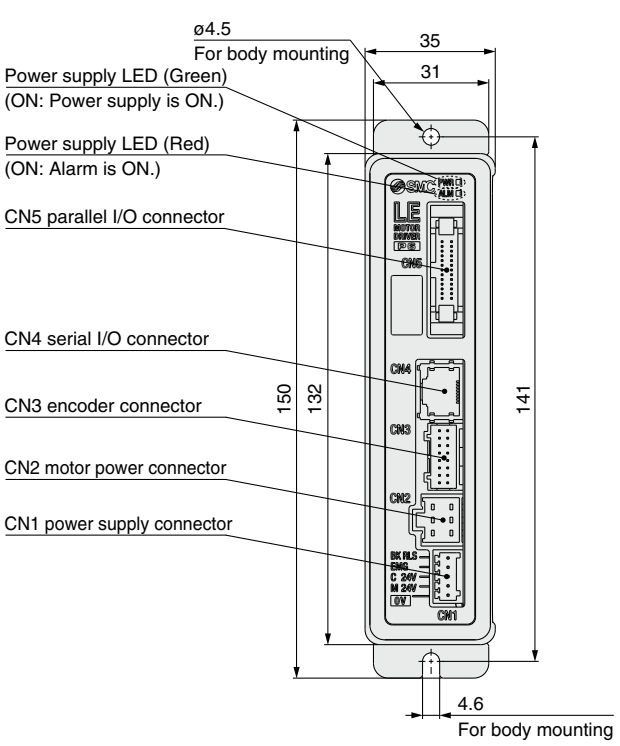

b) DIN rail mounting (LECA6□□D-□)

Refer to page 708 for the L dimension and part number of the DIN rail.

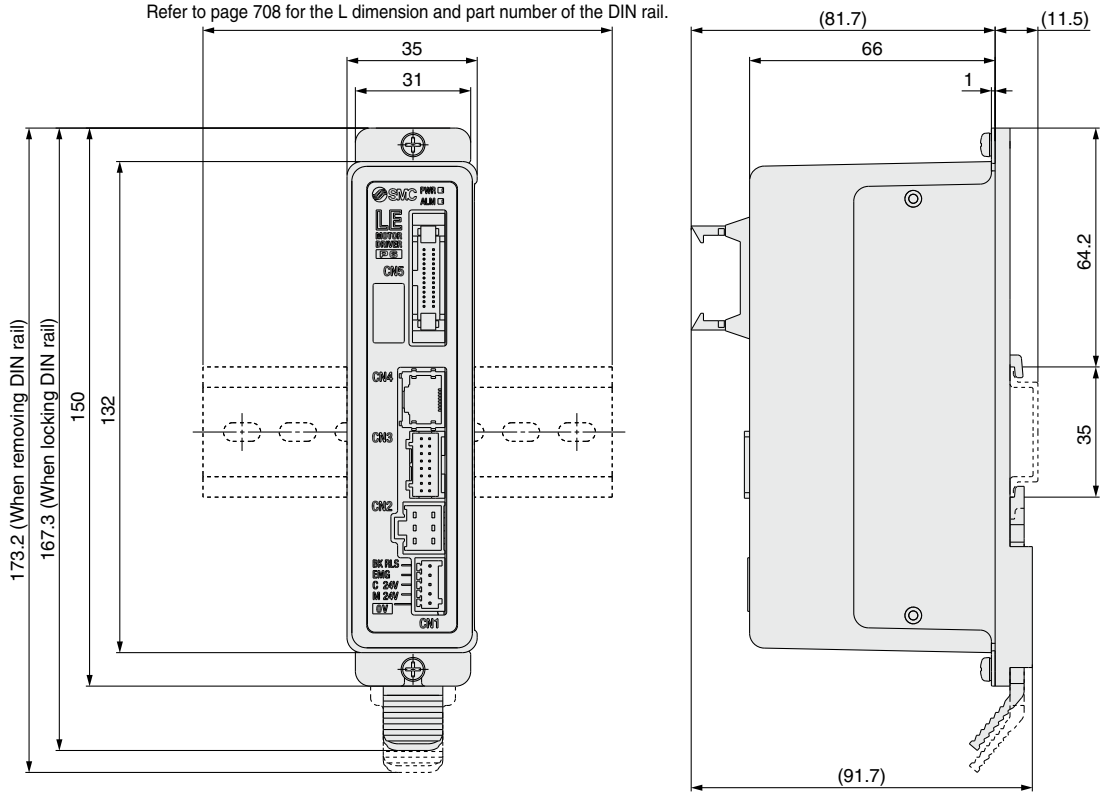

Wiring Example 1

Power Supply Connector: CN1

∗ The power supply plug is an accessory.
<Applicable cable size> AWG20 (0.5 mm²), cover diameter 2.0 mm or less

CN1 Power Supply Connector Terminal for LECA6 (PHOENIX CONTACT FK-MC0.5/7-ST-2.5)

Terminal name	Function	Details
0V	Common supply (–)	The M 24V terminal, C 24V terminal, EMG terminal, and BK RLS terminal are common (–).
M 24V	Motor power supply (+)	Motor power supply (+) supplied to the controller
C 24V	Control power supply (+)	Control power supply (+) supplied to the controller
EMG	Stop (+)	Input (+) for releasing the stop
BK RLS	Lock release (+)	Input (+) for releasing the lock
RG+	Regenerative output 1	Regenerative output terminals for external connection
RG–	Regenerative output 2	(Not necessary to connect them in the combination with the LE series standard specifications.)

Power supply plug for LECA6: LEC-D-1-2

∗ Accessory

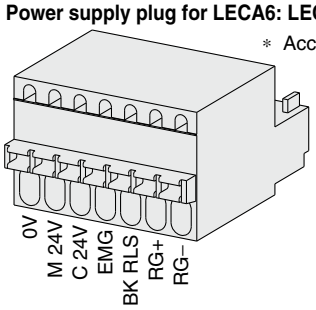

Wiring Example 2

Parallel I/O Connector: CN5

∗ When you connect a PLC to the CN5 parallel I/O connector, use the I/O cable (LEC-CN5-□).
∗ The wiring changes depending on the type of parallel I/O (NPN or PNP).

Wiring diagram

LECA6N□□-□ (NPN)

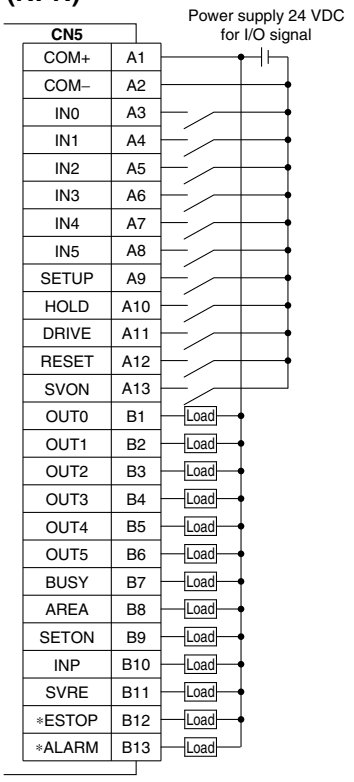

LECA6P□□-□ (PNP)

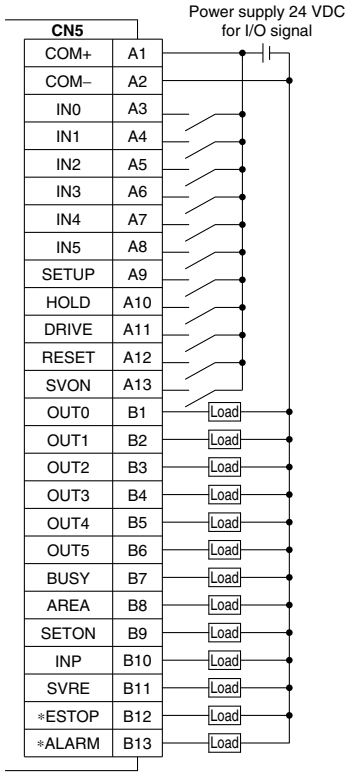

Input Signal

Name	Details
COM+	Connects the power supply 24 V for input/output signal
COM–	Connects the power supply 0 V for input/output signal
IN0 to IN5	Step data specified bit no. (Input is instructed by combining IN0 to 5.)
SETUP	Instruction to return to origin
HOLD	Temporarily stops operation
DRIVE	Instruction to drive
RESET	Resets alarm and interrupts operation
SVON	Servo ON instruction

Output Signal

Name	Details
OUT0 to OUT5	Outputs the step data no. during operation
BUSY	Outputs when the actuator is moving
AREA	Outputs within the step data area output setting range
SETON	Outputs when returning to origin
INP	Outputs when target position or target force is reached (Turns on when the positioning or pushing is completed.)
SVRE	Outputs when servo is ON
∗ESTOP∗1	OFF when EMG stop is instructed
∗ALARM∗1	OFF when alarm is generated

∗1 Negative-logic (N.C.) circuit signal

Step Data Setting

1. Step data setting for positioning

In this setting, the actuator moves toward and stops at the target position.
The following diagram shows the setting items and operation.
The setting items and set values for this operation are stated below.

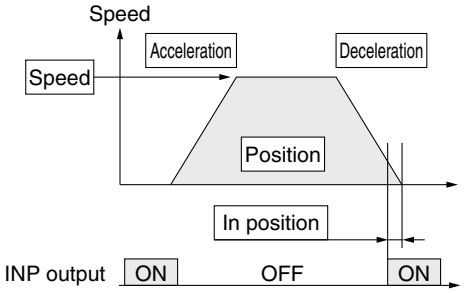

◎: Need to be set.
○: Need to be adjusted as required.
—: Setting is not required.

Step Data (Positioning)

Necessity	Item	Details
◎	Movement MOD	When the absolute position is required, set Absolute. When the relative position is required, set Relative.
◎	Speed	Transfer speed to the target position
◎	Position	Target position
○	Acceleration	Parameter which defines how rapidly the actuator reaches the speed set. The higher the set value, the faster it reaches the speed set.
○	Deceleration	Parameter which defines how rapidly the actuator comes to stop. The higher the set value, the quicker it stops.
◎	Pushing force	Set 0. (If values 1 to 100 are set, the operation will be changed to the pushing operation.)
—	Trigger LV	Setting is not required.
—	Pushing speed	Setting is not required.
○	Moving force	Max. torque during the positioning operation (No specific change is required.)
○	Area 1, Area 2	Condition that turns on the AREA output signal.
○	In position	Condition that turns on the INP output signal. When the actuator enters the range of [in position], the INP output signal turns on. (It is unnecessary to change this from the initial value.) When it is necessary to output the arrival signal before the operation is completed, make the value larger.

2. Step data setting for pushing

The actuator moves toward the pushing start position, and when it reaches that position, it starts pushing with the set force or less.
The following diagram shows the setting items and operation.
The setting items and set values for this operation are stated below.

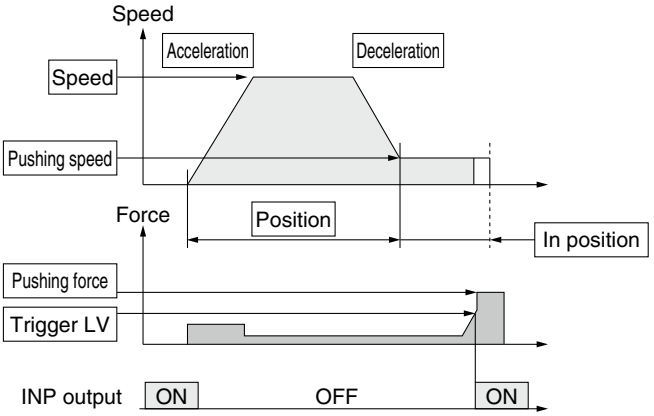

◎: Need to be set.
○: Need to be adjusted as required.

Step Data (Pushing)

Necessity	Item	Details
◎	Movement MOD	When the absolute position is required, set Absolute. When the relative position is required, set Relative.
◎	Speed	Transfer speed to the pushing start position
◎	Position	Pushing start position
○	Acceleration	Parameter which defines how rapidly the actuator reaches the speed set. The higher the set value, the faster it reaches the speed set.
○	Deceleration	Parameter which defines how rapidly the actuator comes to stop. The higher the set value, the quicker it stops.
◎	Pushing force	Pushing force ratio is defined. The setting range differs depending on the electric actuator type. Refer to the operation manual for the electric actuator.
◎	Trigger LV	Condition that turns on the INP output signal. The INP output signal turns on when the generated force exceeds the value. Trigger level should be the pushing force or less.
○	Pushing speed	Pushing speed during pushing. When the speed is set fast, the electric actuator and workpieces might be damaged due to the impact when they hit the end, so this set value should be smaller. Refer to the operation manual for the electric actuator.
○	Moving force	Max. torque during the positioning operation (No specific change is required.)
○	Area 1, Area 2	Condition that turns on the AREA output signal.
◎	In position	Transfer distance during pushing. If the transferred distance exceeds the setting, it stops even if it is not pushing. If the transfer distance is exceeded, the INP output signal will not turn on.

Signal Timing

Return to Origin

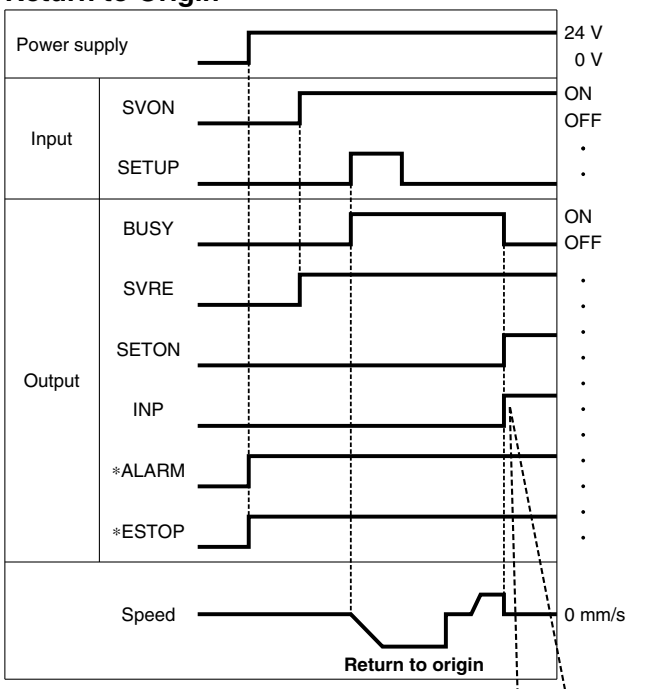

∗ "∗ALARM" and "∗ESTOP" are expressed as negative-logic circuits.

Positioning Operation

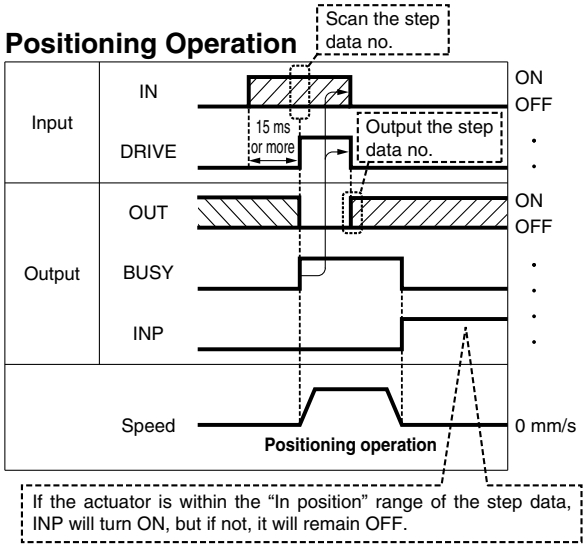

∗ "OUT" is output when "DRIVE" is changed from ON to OFF.
Refer to the operation manual for details on the controller for the LEM series.
(When power supply is applied, "DRIVE" or "RESET" is turned ON or "∗ESTOP" is turned OFF, all of the "OUT" outputs are OFF.)

Pushing Operation

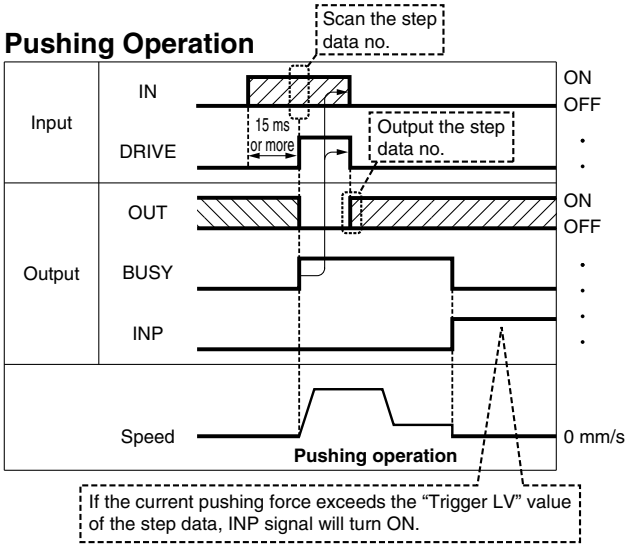

HOLD

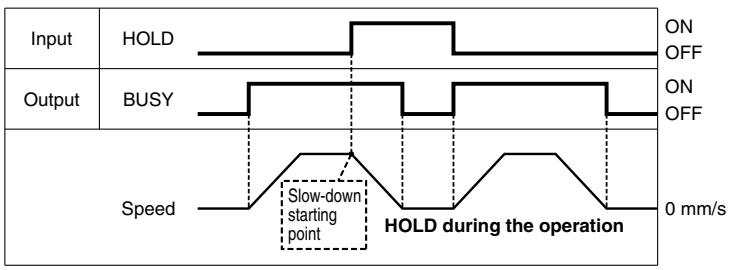

∗ When the actuator is within the "In position" range in the pushing operation, it does not stop even if HOLD signal is input.

Reset

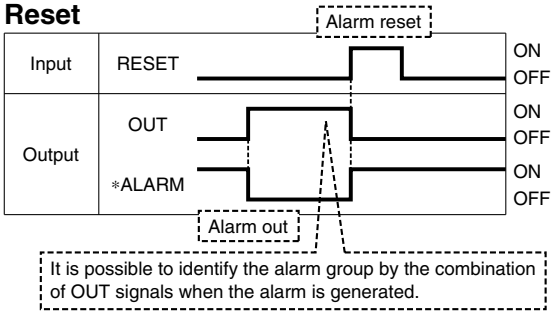

∗ "∗ALARM" is expressed as a negative-logic circuit.

Option: I/O Cable

LEC − CN5 − 1

Cable length (L) [m]

1	1.5
3	3
5	5

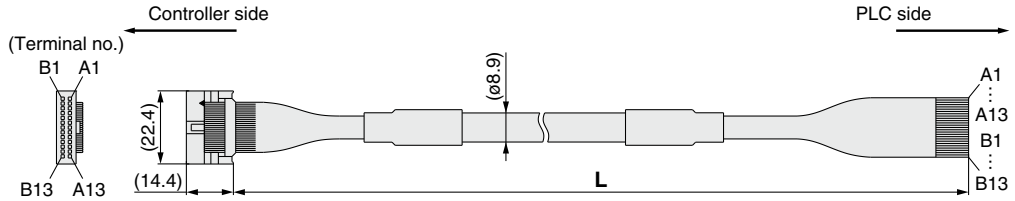

∗ Conductor size: AWG28

Connector pin no.	Insulation color	Dot mark	Dot color
A1	Light brown	■	Black
A2	Light brown	■	Red
A3	Yellow	■	Black
A4	Yellow	■	Red
A5	Light green	■	Black
A6	Light green	■	Red
A7	Gray	■	Black
A8	Gray	■	Red
A9	White	■	Black
A10	White	■	Red
A11	Light brown	■ ■	Black
A12	Light brown	■ ■	Red
A13	Yellow	■ ■	Black

Connector pin no.	Insulation color	Dot mark	Dot color
B1	Yellow	■ ■	Red
B2	Light green	■ ■	Black
B3	Light green	■ ■	Red
B4	Gray	■ ■	Black
B5	Gray	■ ■	Red
B6	White	■ ■	Black
B7	White	■ ■	Red
B8	Light brown	■ ■ ■	Black
B9	Light brown	■ ■ ■	Red
B10	Yellow	■ ■ ■	Black
B11	Yellow	■ ■ ■	Red
B12	Light green	■ ■ ■	Black
B13	Light green	■ ■ ■	Red
—	Shield		

Weight

Product no.	Weight [g]
LEC-CN5-1	170
LEC-CN5-3	320
LEC-CN5-5	520

Option: Noise Filter Set for Servo Motor (24 VDC)

LEC − NFA

Contents of the set: 2 noise filters (Manufactured by WURTH ELEKTRONIK: 74271222)

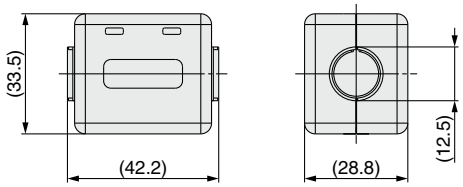

∗ Refer to the LECA6 series Operation Manual for installation.

Gateway Unit
LEC-G Series

Click here for details.

RoHS

How to Order

⚠Caution

[CE-compliant products]
EMC compliance was tested by combining the electric actuator LE series and the controller LEC series. The EMC depends on the configuration of the customer's control panel and the relationship with other electrical equipment and wiring. Therefore, compliance with the EMC directive cannot be certified for SMC components incorporated into the customer's equipment under actual operating conditions. As a result, it is necessary for the customer to verify compliance with the EMC directive for the machinery and equipment as a whole.

[UL-compliant products]
When compliance with UL is required, the electric actuator and controller should be used with a UL1310 Class 2 power supply.

Gateway unit **LEC-G MJ2 □**

Applicable Fieldbus protocols

MJ2	CC-Link Ver. 2.0
DN1	DeviceNet®
PR1	PROFIBUS DP
EN1	EtherNet/IP™

Mounting

Nil	Screw mounting
D*1	DIN rail

*1 The DIN rail is not included. It must be ordered separately.

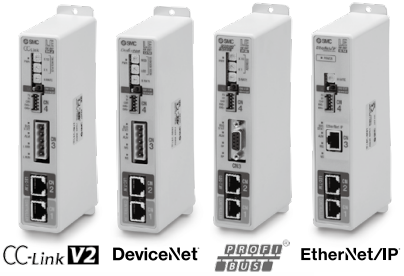

Cable **LEC-CG 1-L**

Cable type

1	Communication cable
2	Cable between branches

Cable length

K	0.3 m
L	0.5 m
1	1 m

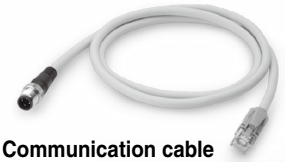
Communication cable

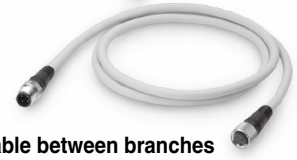
Cable between branches

Branch connector **LEC-CGD**

Branch connector



Terminating resistor **LEC-CGR**

Specifications

Model			LEC-GMJ2□	LEC-GDN1□	LEC-GPR1□	LEC-GEN1□
Communication specifications	Applicable system	Fieldbus	CC-Link	DeviceNet®	PROFIBUS DP	EtherNet/IP™
		Version*1	Ver. 2.0	Release 2.0	V1	Release 1.0
	Communication speed [bps]		156 k/625 k/2.5 M /5 M/10 M	125 k/250 k/500 k	9.6 k/19.2 k/45.45 k/ 93.75 k/187.5 k/500 k/ 1.5 M/3 M/6 M/12 M	10 M/100 M
	Configuration file*2		—	EDS file	GSD file	EDS file
	I/O occupation area		4 stations occupied (8 times setting) Input 896 points 108 words Output 896 points 108 words	Input 200 bytes Output 200 bytes	Input 57 words Output 57 words	Input 256 bytes Output 256 bytes
	Power supply for communication	Power supply voltage [V]*6	—	11 to 25 VDC	—	—
		Internal current consumption [mA]	—	100	—	—
	Communication connector specifications		Connector (Accessory)	Connector (Accessory)	D-sub	RJ45
	Terminating resistor		Not included	Not included	Not included	Not included
Power supply voltage [V]*6			24 VDC ±10%			
Current consumption [mA]	Not connected to teaching box		200			
	Connected to teaching box		300			
EMG output terminal			30 VDC 1 A			
Controller specifications	Applicable controllers		LECA6 Series			
	Communication speed [bps]*3		115.2 k/230.4 k			
	Max. number of connectable controllers*4		12	8*5	5	12
Accessories			Power supply connector, communication connector		Power supply connector	
Operating temperature range [°C]			0 to 40 (No freezing)			
Operating humidity range [%RH]			90 or less (No condensation)			
Storage temperature range [°C]			−10 to 60 (No freezing)			
Storage humidity range [%RH]			90 or less (No condensation)			
Weight [g]			200 (Screw mounting), 220 (DIN rail mounting)			

*1 Please note that versions are subject to change.
*2 Each file can be downloaded from the SMC website.
*3 When using a teaching box (LEC-T1-□), set the communication speed to 115.2 kbps.
*4 A communication response time for 1 controller is approximately 30 ms.
Refer to the "Communication Response Time Guideline" for response times when several controllers are connected.
*5 For step data input, up to 12 controllers connectable.
*6 When compliance with UL is required, the electric actuator and controller should be used with a UL1310 Class 2 power supply.

Communication Response Time Guideline

Response time between gateway unit and controllers depends on the number of controllers connected to the gateway unit. For response time, refer to the graph below.

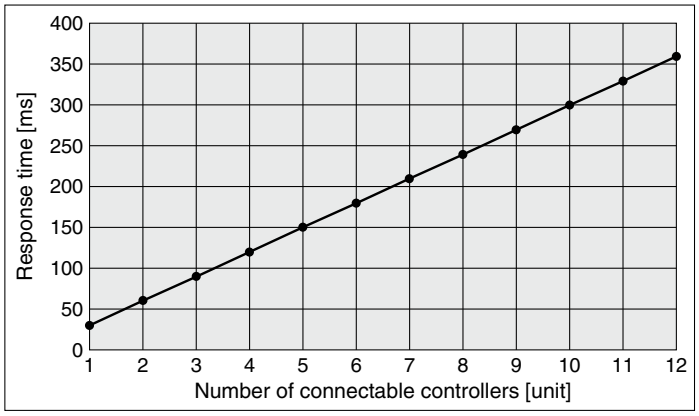

* This graph shows delay times between gateway unit and controllers. Fieldbus network delay time is not included.

Dimensions

Screw mounting (LEC-G□□□)

Applicable Fieldbus protocol: CC-Link Ver. 2.0

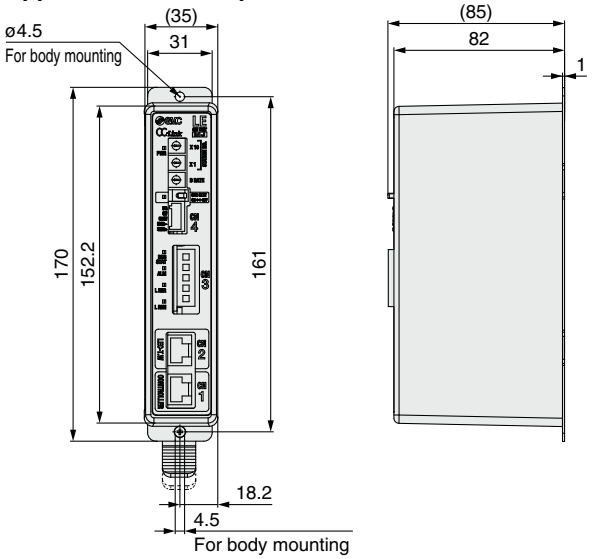

Applicable Fieldbus protocol: DeviceNet™

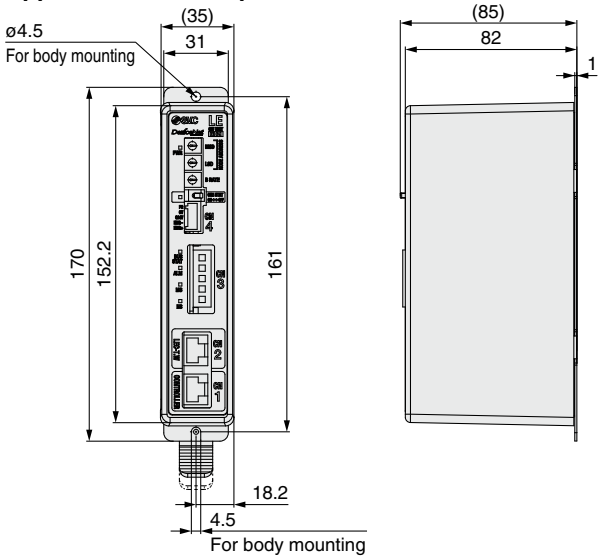

Applicable Fieldbus protocol: PROFIBUS DP

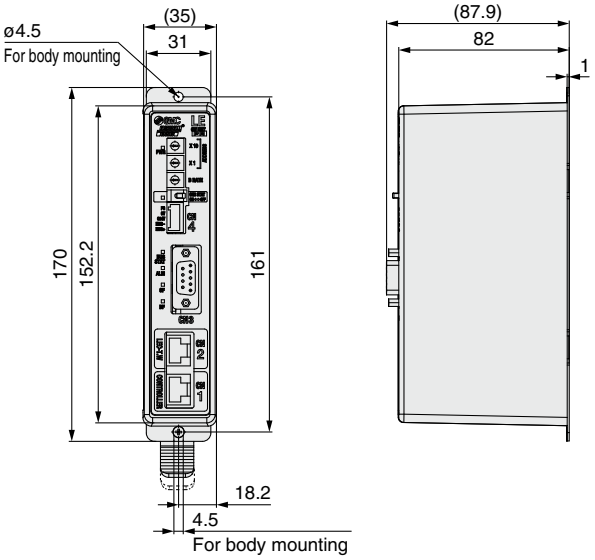

Applicable Fieldbus protocol: EtherNet/IP™

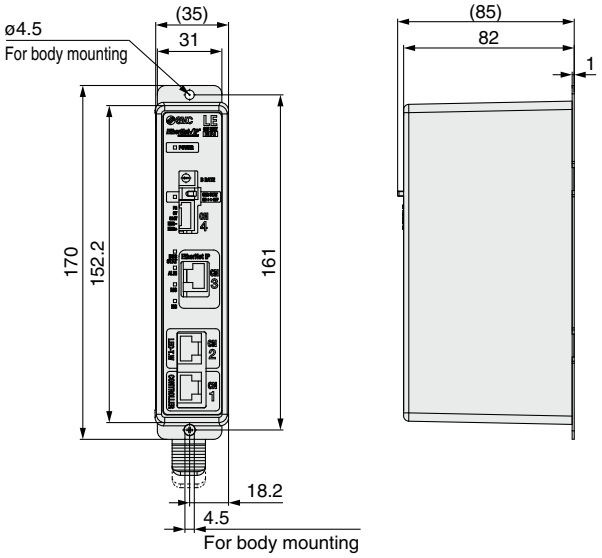

■**Trademark** DeviceNet™ is a trademark of ODVA. EtherNet/IP™ is a trademark of ODVA.

Dimensions

DIN rail mounting (LEC-G□□□D)

Applicable Fieldbus protocol: CC-Link Ver. 2.0

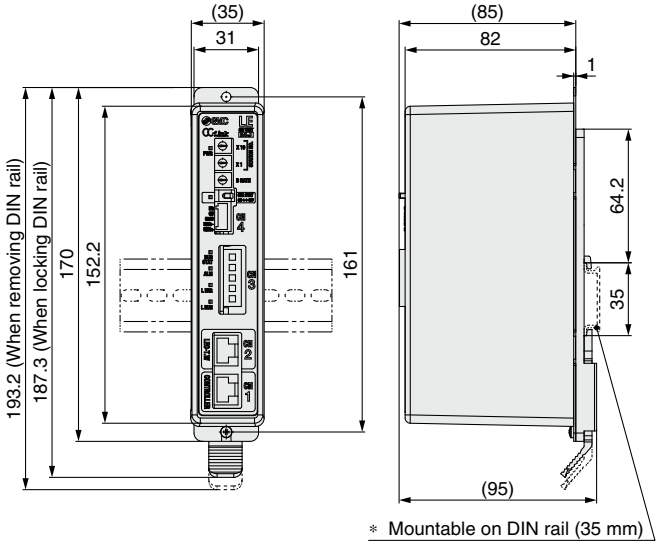

Applicable Fieldbus protocol: DeviceNet™

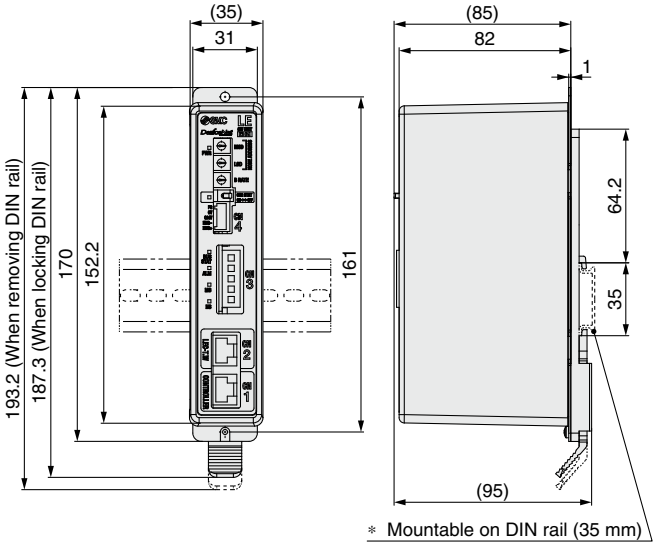

Applicable Fieldbus protocol: PROFIBUS DP

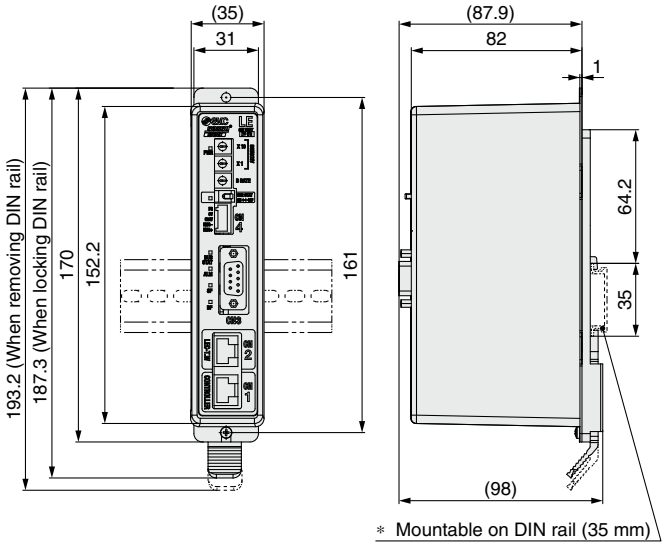

Applicable Fieldbus protocol: EtherNet/IP™

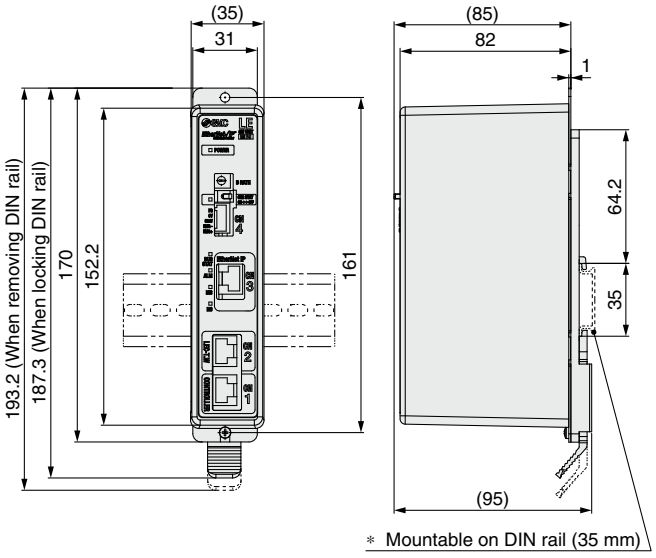

DIN rail
AXT100-DR-□

∗ For □, enter a number from the No. line in the table below.
Refer to the dimension drawings above for the mounting dimensions.

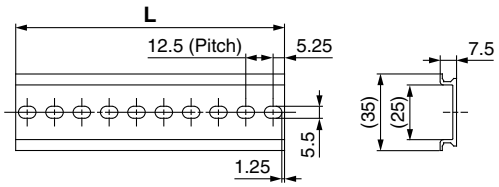

L Dimensions [mm]

No.	1	2	3	4	5	6	7	8	9	10	11	12	13	14	15	16	17	18	19	20
L	23	35.5	48	60.5	73	85.5	98	110.5	123	135.5	148	160.5	173	185.5	198	210.5	223	235.5	248	260.5

No.	21	22	23	24	25	26	27	28	29	30	31	32	33	34	35	36	37	38	39	40
L	273	285.5	298	310.5	323	335.5	348	360.5	373	385.5	398	410.5	423	435.5	448	460.5	473	485.5	498	510.5

■**Trademark** DeviceNet™ is a trademark of ODVA. EtherNet/IP™ is a trademark of ODVA.

Wiring Example

Power Supply Connector: CN1

* The power supply plug is an accessory.
<Applicable cable size> AWG20 (0.5 mm^2), cover diameter 2.0 mm or less

CN1 Power Supply Connector Terminal for LEC-G (PHOENIX CONTACT FK-MC0.5/5-ST-2.5)

Terminal name	Function	Details
EMG +	EMG signal output +	Output terminal of the emergency stop switch of the teaching box
EMG –	EMG signal output –	
24V	Power supply + terminal	Power supply terminal of the Gateway unit (Power to the teaching box is supplied from this terminal)
0V	Power supply – terminal	
FG	FG terminal	Grounding terminal

Power supply plug for LEC-G: LEC-D-1-1

* Accessory

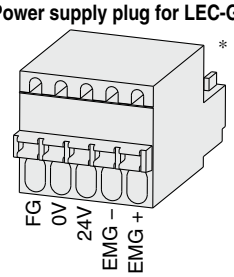

Compatible actuators

LEF LEL LEM
LEY LES LEP
LER LEH

Programless Controller

LECP1 Series



Click here for details.

How to Order

LE C P 1 N 1 [ ] – LEFS16A-400

Controller

Compatible motor

P	Step motor (Servo/24 VDC)

Number of step data (Points)

1	14 (Programless)

Parallel I/O type

N	NPN
P	PNP

I/O cable length [m]

Nil	Without cable
1	1.5
3	3
5	5

Option

Nil	Screw mounting
D∗1	DIN rail mounting

∗1 The DIN rail is not included. It must be ordered separately.

Actuator part number

(Without cable specifications and actuator options)
Example: Enter "**LEFS16A-400**" for the LEFS16A-400B-R11N1.

∗ **When controller equipped type is selected when ordering the LE series, you do not need to order this controller.**

⚠Caution

[CE-compliant products]
EMC compliance was tested by combining the electric actuator LE series and the controller LEC series.
The EMC depends on the configuration of the customer's control panel and the relationship with other electrical equipment and wiring. Therefore, compliance with the EMC directive cannot be certified for SMC components incorporated into the customer's equipment under actual operating conditions. As a result, it is necessary for the customer to verify compliance with the EMC directive for the machinery and equipment as a whole.
[UL-compliant products]
When compliance with UL is required, the electric actuator and controller should be used with a UL1310 Class 2 power supply.

The controller is sold as single unit after the compatible actuator is set.
Confirm that the combination of the controller and actuator is correct.

∗ Refer to the operation manual for using the products. Please download it via our website: https://www.smcworld.com

Specifications

Basic Specifications

Item	LECP1
Compatible motor	Step motor (Servo/24 VDC)
Power supply∗1	Power supply voltage: 24 VDC ±10%∗2 [Including the motor drive power, control power supply, stop, lock release]
Parallel input	6 inputs (Photo-coupler isolation)
Parallel output	6 outputs (Photo-coupler isolation)
Stop points	14 points (Position number 1 to 14(E))
Compatible encoder	Incremental
Memory	EEPROM
LED indicator	LED (Green/Red) one of each
7-segment LED display∗3	1 digit, 7-segment display (Red) Figures are expressed in hexadecimal ("10" to "15" in decimal number are expressed as "A" to "F")
Lock control	Forced-lock release terminal∗4
Cable length [m]	I/O cable: 5 or less, Actuator cable: 20 or less
Cooling system	Natural air cooling
Operating temperature range [°C]	0 to 40 (No freezing)
Operating humidity range [%RH]	90 or less (No condensation)
Storage temperature range [°C]	–10 to 60 (No freezing)
Storage humidity range [%RH]	90 or less (No condensation)
Insulation resistance [MΩ]	Between the housing and SG terminal: 50 (500 VDC)
Weight [g]	130 (Screw mounting), 150 (DIN rail mounting)

∗1 Do not use the power supply of "inrush current prevention type" for the controller input power supply. When compliance with UL is required, the electric actuator and controller should be used with a UL1310 Class 2 power supply.
∗2 The power consumption changes depending on the actuator model. Refer to the each actuator's operation manual, etc., for details.
∗3 "10" to "15" in decimal number are displayed as follows in the 7-segment LED.

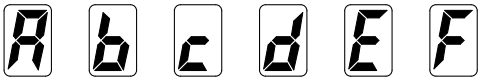

Decimal display	10	11	12	13	14	15
Hexadecimal display	A	b	c	d	E	F

∗4 Applicable to non-magnetizing locks

Controller Details

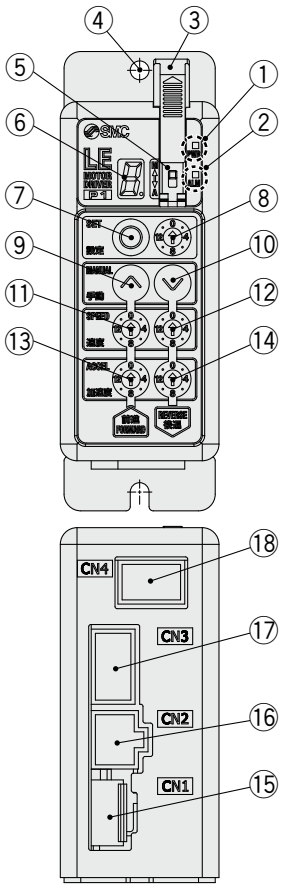

No.	Display	Description	Details
①	**PWR**	Power supply LED	Power supply ON/Servo ON : Green turns on Power supply ON/Servo OFF: Green flashes
②	**ALM**	Alarm LED	With alarm : Red turns on Parameter setting : Red flashes
③	—	Cover	Change and protection of the mode switch (Close the cover after changing switch)
④	—	FG	Frame ground (Tighten the screw with the washer when mounting the controller. Connect the ground wire.)
⑤	—	Mode switch	Switch the mode between manual and auto.
⑥	—	7-segment LED	Stop position, the value set by ⑧ and alarm information are displayed.
⑦	**SET**	Set button	Decide the settings or drive operation in Manual mode.
⑧	—	Position selecting switch	Assign the position to drive (1 to 14), and the origin position (15).
⑨	**MANUAL**	Manual forward button	Perform forward jog and inching.
⑩		Manual reverse button	Perform reverse jog and inching.
⑪	**SPEED**	Forward speed switch	16 forward speeds are available.
⑫		Reverse speed switch	16 reverse speeds are available.
⑬	**ACCEL**	Forward acceleration switch	16 forward acceleration steps are available.
⑭		Reverse acceleration switch	16 reverse acceleration steps are available.
⑮	**CN1**	Power supply connector	Connect the power supply cable.
⑯	**CN2**	Motor connector	Connect the motor connector.
⑰	**CN3**	Encoder connector	Connect the encoder connector.
⑱	**CN4**	I/O connector	Connect I/O cable.

How to Mount

Controller mounting shown below.

1. Mounting screw (LECP1□□-□)

(Installation with two M4 screws)

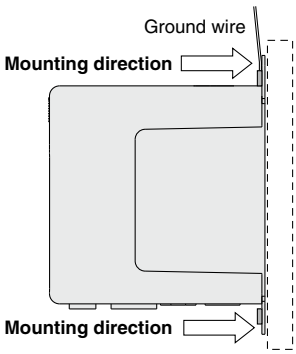

2. Grounding

Tighten the screw with the washer when mounting the ground wire as shown below.

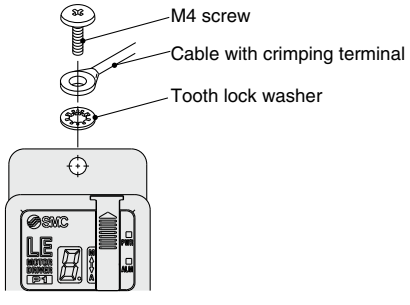

Controller

∗ When size 25 or more of the LE series are used, the space between the controllers should be 10 mm or more.

⚠Caution

- M4 screws, cable with crimping terminal and tooth lock washer are not included. Be sure to carry out grounding earth in order to ensure the noise tolerance.
- Use a watchmaker's screwdriver of the size shown below when changing position switch ⑧ and the set value of the speed/acceleration switch ⑪ to ⑭.

Size
End width **L**: 2.0 to 2.4 [mm]
End thickness **W**: 0.5 to 0.6 [mm]

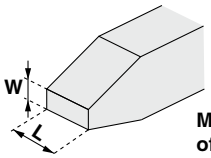

Magnified view of the end of the screwdriver

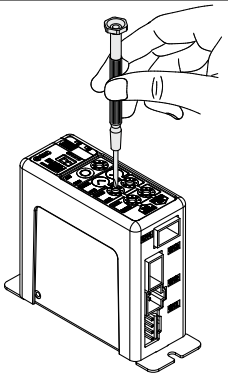

Dimensions

Screw mounting (LEC□1□□-□)

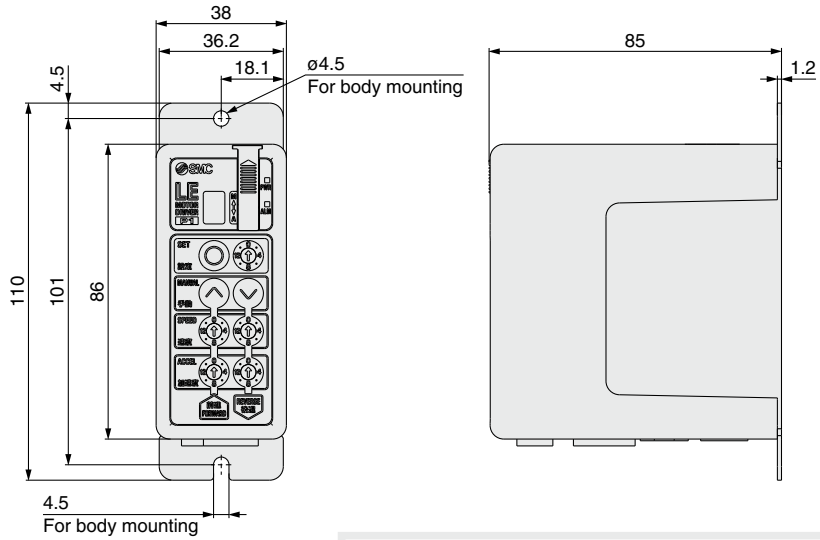

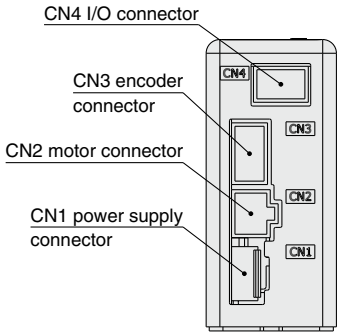

DIN rail mounting (LEC□1□□D-□)

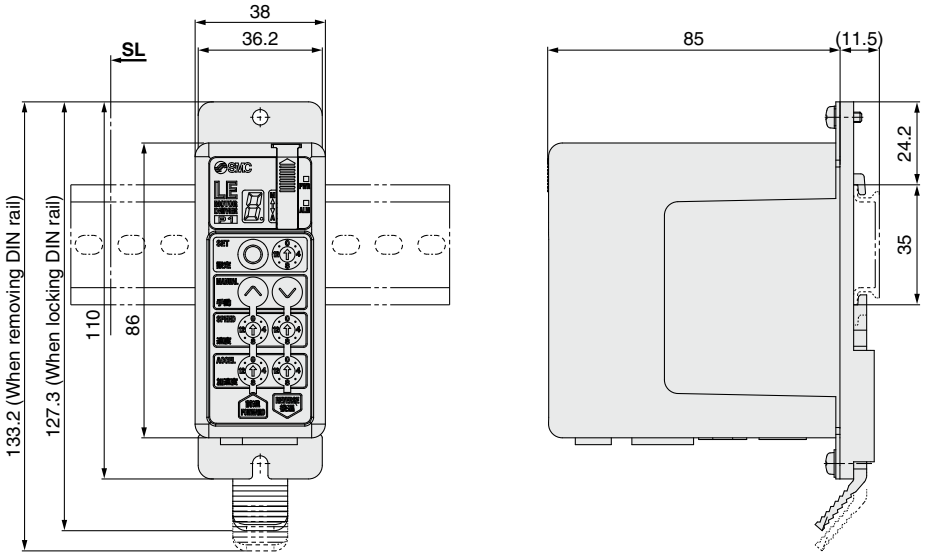

DIN rail
AXT100-DR-□

∗ For □, enter a number from the No. line in the table below.
Refer to the dimension drawings above for the mounting dimensions.

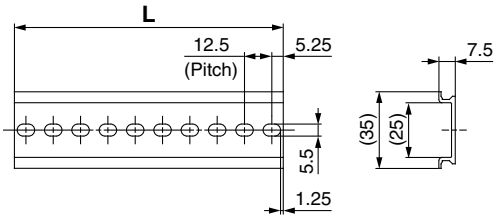

L Dimensions [mm]

No.	1	2	3	4	5	6	7	8	9	10	11	12	13	14
L	23	35.5	48	60.5	73	85.5	98	110.5	123	135.5	148	160.5	173	185.5
No.	15	16	17	18	19	20	21	22	23	24	25	26	27	28
L	198	210.5	223	235.5	248	260.5	273	285.5	298	310.5	323	335.5	348	360.5
No.	29	30	31	32	33	34	35	36	37	38	39	40		
L	373	385.5	398	410.5	423	435.5	448	460.5	473	485.5	498	510.5		

DIN rail mounting adapter
LEC-1-D0 (with 2 mounting screws)

This should be used when the DIN rail mounting adapter is mounted onto a screw mounting type controller afterward.

Wiring Example 1

Power Supply Connector: CN1

* When you connect a CN1 power supply connector, use the power supply cable (LEC-CK1-1).
* The power supply cable (LEC-CK1-1) is an accessory.

CN1 Power Supply Connector Terminal for LECP1

Terminal name	Cable color	Function	Details
0V	Blue	Common supply (–)	The M 24V terminal, C 24V terminal, and BK RLS terminal are common (–).
M 24V	White	Motor power supply (+)	Motor power supply (+) supplied to the controller
C 24V	Brown	Control power supply (+)	Control power supply (+) supplied to the controller
BK RLS	Black	Lock release (+)	Input (+) for releasing the lock

Power supply cable for LECP1 (LEC-CK1-1)

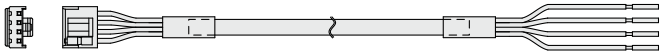

Wiring Example 2

Parallel I/O Connector: CN4

* When you connect a PLC to the CN4 parallel I/O connector, use the I/O cable (LEC-CK4-□).
* The wiring changes depending on the type of parallel I/O (NPN or PNP).

■NPN

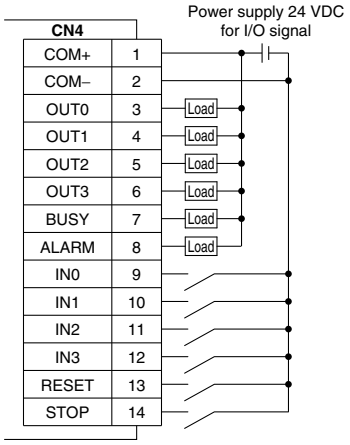

■PNP

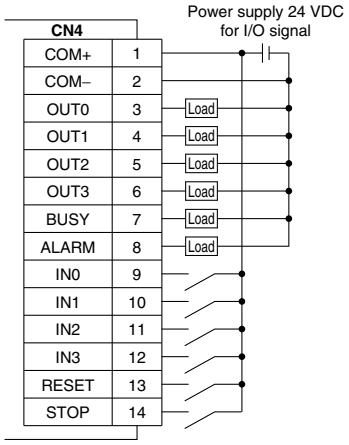

Input Signal

Name	Details
COM+	Connects the power supply 24 V for input/output signal
COM–	Connects the power supply 0 V for input/output signal
IN0 to IN3	• Instruction to drive (input as a combination of IN0 to IN3) • Instruction to return to origin (IN0 to IN3 all ON simultaneously) Example - (instruction to drive for position no. 5) IN3: OFF, IN2: ON, IN1: OFF, IN0: ON
RESET	Alarm reset and operation interruption During operation: deceleration stop from position at which signal is input (servo ON maintained) While alarm is generated: alarm reset
STOP	Instruction to stop (after maximum deceleration stop, servo OFF)

Output Signal

Name	Details
OUT0 to OUT3	Turns ON when the positioning or pushing is completed. (Output is instructed in the combination of OUT0 to 3.) Example - (operation complete for position no. 3) OUT3: OFF, OUT2: OFF, OUT1: ON, OUT0: ON
BUSY	Outputs when the actuator is moving
*ALARM*1	OFF when alarm is generated or servo OFF

*1 Negative-logic (N.C.) circuit signal

Input Signal [IN0 - IN3] Position Number Chart ○: OFF ●: ON

Position number	IN3	IN2	IN1	IN0
1	○	○	○	●
2	○	○	●	○
3	○	○	●	●
4	○	●	○	○
5	○	●	○	●
6	○	●	●	○
7	○	●	●	●
8	●	○	○	○
9	●	○	○	●
10 (A)	●	○	●	○
11 (B)	●	○	●	●
12 (C)	●	●	○	○
13 (D)	●	●	○	●
14 (E)	●	●	●	○
Return to origin	●	●	●	●

Output Signal [OUT0 - OUT3] Position Number Chart ○: OFF ●: ON

Position number	OUT3	OUT2	OUT1	OUT0
1	○	○	○	●
2	○	○	●	○
3	○	○	●	●
4	○	●	○	○
5	○	●	○	●
6	○	●	●	○
7	○	●	●	●
8	●	○	○	○
9	●	○	○	●
10 (A)	●	○	●	○
11 (B)	●	○	●	●
12 (C)	●	●	○	○
13 (D)	●	●	○	●
14 (E)	●	●	●	○
Return to origin	●	●	●	●

Signal Timing

(1) Return to Origin

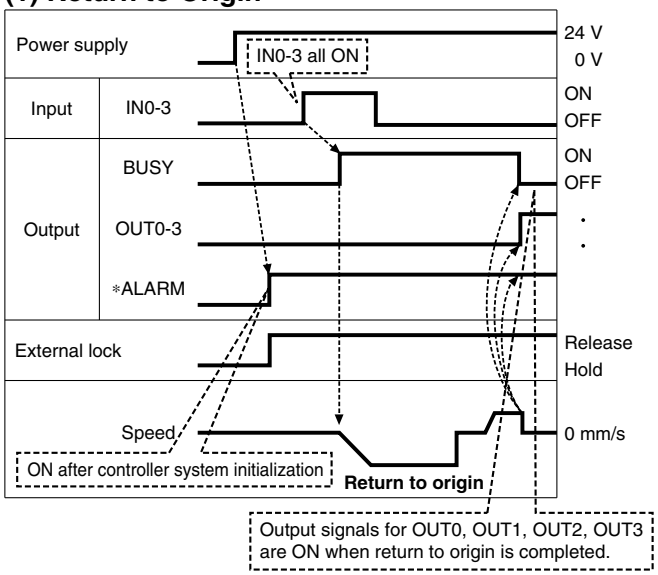

∗ "∗ALARM" is expressed as a negative-logic circuit.

(2) Positioning Operation

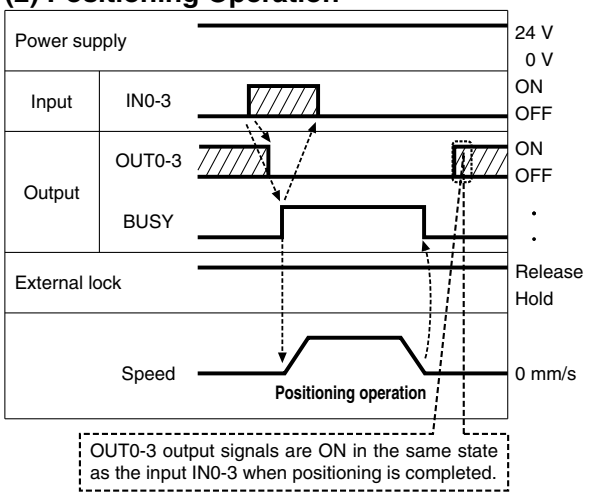

(3) Cut-off Stop (Reset Stop)

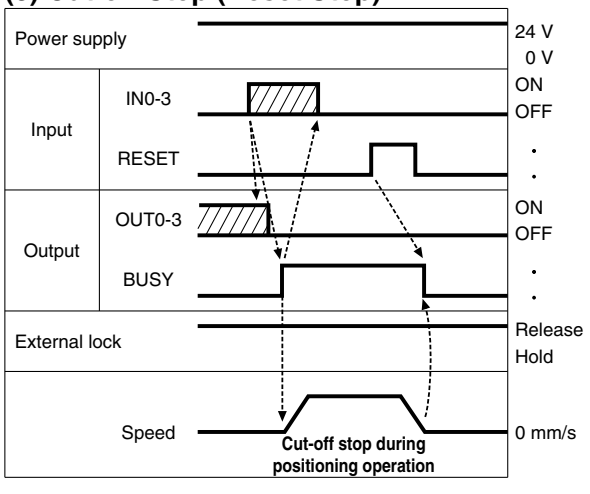

(4) Stop by the STOP Signal

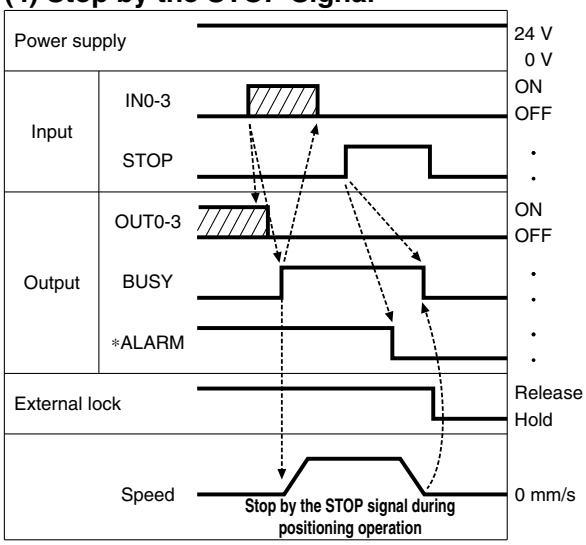

(5) Alarm Reset

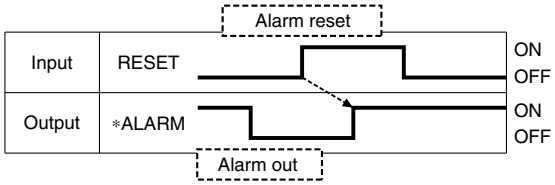

∗ "∗ALARM" is expressed as a negative-logic circuit.

Options

[Power supply cable]

LEC−CK1−1

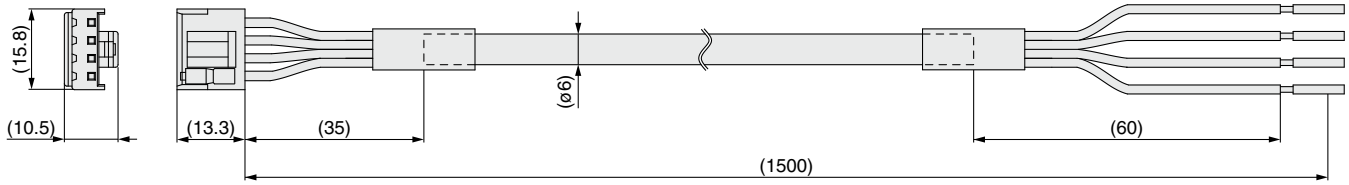

Terminal name	Covered color	Function
0V	Blue	Common supply (–)
M 24V	White	Motor power supply (+)
C 24V	Brown	Control power supply (+)
BK RLS	Black	Lock release (+)

∗ Conductor size: AWG20

Weight: 90 g

[I/O cable]

LEC−CK4−□

Cable length (L) [m]

1	1.5
3	3
5	5

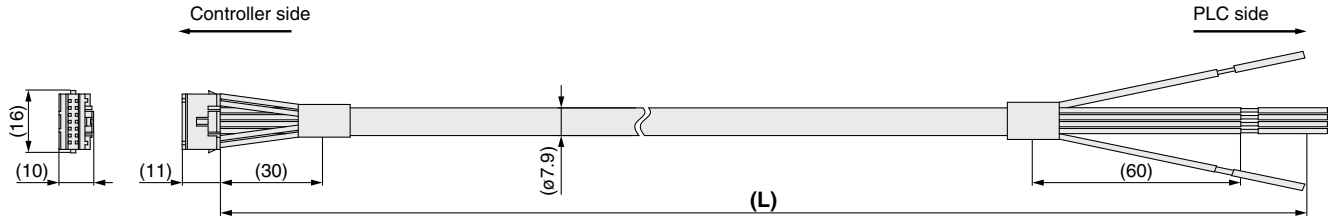

Terminal no.	Insulation color	Dot mark	Dot color	Function
1	Light brown	■	Black	COM+
2	Light brown	■	Red	COM–
3	Yellow	■	Black	OUT0
4	Yellow	■	Red	OUT1
5	Light green	■	Black	OUT2
6	Light green	■	Red	OUT3
7	Gray	■	Black	BUSY
8	Gray	■	Red	ALARM
9	White	■	Black	IN0
10	White	■	Red	IN1
11	Light brown	■■	Black	IN2
12	Light brown	■■	Red	IN3
13	Yellow	■■	Black	RESET
14	Yellow	■■	Red	STOP

∗ Conductor size: AWG26

∗ Parallel I/O signal is valid in auto mode. While the test function operates at manual mode, only the output is valid.

Weight

Product no.	Weight [g]
LEC-CK4-1	100
LEC-CK4-3	200
LEC-CK4-5	330

Specialized for LEM series

Programless Controller (With Stroke Study)

LECP2 Series



Compatible actuator

LEM

Click here for details.

How to Order

LE C P 2 N 1 ☐ – LEMB25T-300

Controller

Compatible motor

P	Step motor (Servo/24 VDC)

Number of step data (Points)

2	2 stroke end points/ 12 intermediate points (Programless)

Parallel I/O type

N	NPN
P	PNP

I/O cable length [m]

Nil	Without cable
1	1.5
3	3
5	5

Option

Nil	Screw mounting
D∗1	DIN rail mounting

∗1 The DIN rail is not included. It must be ordered separately.

Actuator part number

(Without cable specifications and actuator options)
Example: Enter "LEMB25T-300" for the LEMB25T-300W-S12N1.

⚠ Caution

[CE-compliant products]
EMC compliance was tested by combining the electric actuator LEM series and the controller LEC series.
The EMC depends on the configuration of the customer's control panel and the relationship with other electrical equipment and wiring. Therefore, compliance with the EMC directive cannot be certified for SMC components incorporated into the customer's equipment under actual operating conditions. As a result, it is necessary for the customer to verify compliance with the EMC directive for the machinery and equipment as a whole.

[UL-compliant products]
When compliance with UL is required, the electric actuator and controller should be used with a UL1310 Class 2 power supply.

The controller is sold as single unit after the compatible actuator is set.
Confirm that the combination of the controller and the actuator is correct.

∗ Refer to the operation manual for using the products. Please download it via our website: https://www.smcworld.com

Specifications

Basic Specifications

Item	LECP2
Compatible motor	Step motor (Servo/24 VDC)
Power supply∗1	Power supply voltage: 24 VDC ±10%∗2 [Including motor drive power, control power, stop, lock release]
Parallel input	6 inputs (Photo-coupler isolation)
Parallel output	6 outputs (Photo-coupler isolation)
Stop points	Stroke ends 2 points (Position number 1 and 2), Intermediate position 12 points (Position number 3 to 14(E))
Compatible encoder	Incremental
Memory	EEPROM
LED indicator	LED (Green/Red) one of each
7-segment LED display∗3	1 digit, 7-segment display (Red) Figures are expressed in hexadecimal. ("10" to "15" in decimal number are expressed as "A" to "F")
Lock control	Forced-lock release terminal∗4
Cable length [m]	I/O cable: 5 or less, Actuator cable: 20 or less
Cooling system	Natural air cooling
Operating temperature range [°C]	0 to 40 (No freezing)
Operating humidity range [%RH]	90 or less (No condensation)
Storage temperature range [°C]	−10 to 60 (No freezing)
Storage humidity range [%RH]	90 or less (No condensation)
Insulation resistance [MΩ]	Between the housing and SG terminal: 50 (500 VDC)
Weight [g]	130 (Screw mounting), 150 (DIN rail mounting)

∗1 Do not use the power supply of "inrush current prevention type" for the controller input power supply. When compliance with UL is required, the electric actuator and controller should be used with a UL1310 Class 2 power supply.
∗2 The power consumption changes depending on the actuator model. Refer to the each actuator's operation manual, etc., for details.
∗3 "10" to "15" in decimal number are displayed as follows in the 7-segment LED.

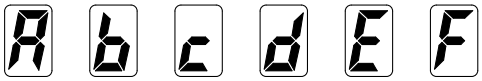

Decimal display	10	11	12	13	14	15
Hexadecimal display	A	b	c	d	E	F

∗4 Applicable to non-magnetizing locks

SMC

Controller Details

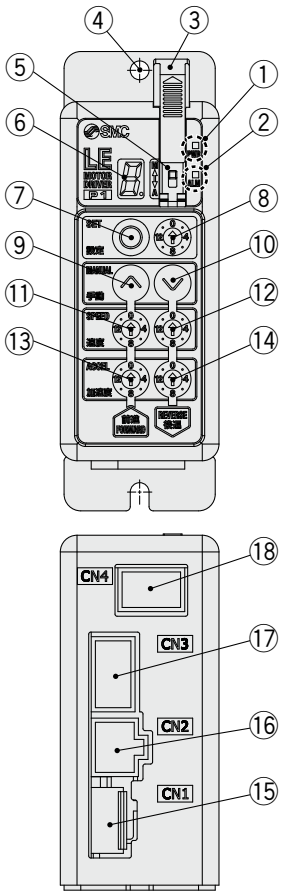

No.	Display	Description	Details
①	**PWR**	Power supply LED	Power supply ON/Servo ON : Green turns on. Power supply ON/Servo OFF: Green flashes.
②	**ALM**	Alarm LED	With alarm : Red turns on. Parameter setting : Red flashes.
③	—	Cover	Change and protection of the mode switch (Close the cover after changing switch.)
④	—	FG	Frame ground (Tighten the screw with the washer when mounting the controller. Connect the ground wire.)
⑤	—	Mode switch	Switch the mode between manual and auto.
⑥	—	7-segment LED	Stop position, the value set by ⑧ and alarm information are displayed.
⑦	**SET**	Set button	Decide the settings or drive operation in manual mode.
⑧	—	Position selecting switch	Assign the position to drive (1 to 14), and the origin position (15).
⑨	**MANUAL**	Manual forward button	Perform forward jog and inching.
⑩		Manual reverse button	Perform reverse jog and inching.
⑪	**SPEED**	Forward speed switch	16 forward speeds are available.
⑫		Reverse speed switch	16 reverse speeds are available.
⑬	**ACCEL**	Forward acceleration switch	16 forward acceleration steps are available.
⑭		Reverse acceleration switch	16 reverse acceleration steps are available.
⑮	**CN1**	Power supply connector	Connect the power supply cable.
⑯	**CN2**	Motor connector	Connect the motor connector.
⑰	**CN3**	Encoder connector	Connect the encoder connector.
⑱	**CN4**	I/O connector	Connect the I/O cable.

How to Mount

Controller mounting shown below

1. Screw mounting (LECP2□□-□)

(Installation with two M4 screws)

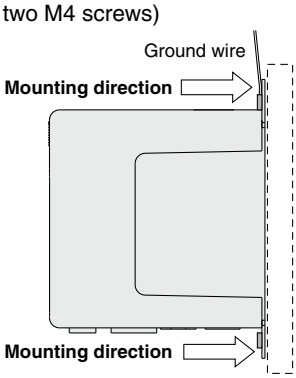

∗ The space between the controllers should be 10 mm or more.

2. Grounding

Tighten the screw with the washer when mounting the ground wire as shown below.

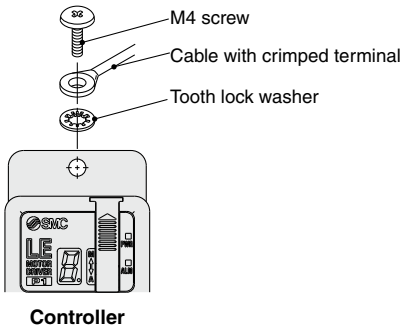

⚠Caution

- M4 screws, cable with crimping terminal and tooth lock washer are not included. Be sure to carry out grounding earth in order to ensure the noise tolerance.
- Use a watchmaker's screwdriver of the size shown below when changing position switch ⑧ and the set value of the speed/acceleration switch ⑪ to ⑭.

Size
End width **L**: 2.0 to 2.4 [mm]
End thickness **W**: 0.5 to 0.6 [mm]

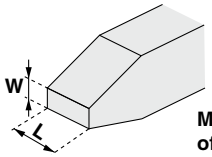

Magnified view of the end of the screwdriver

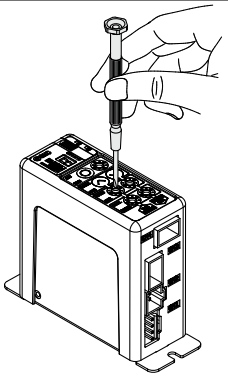

Dimensions

Screw mounting (LEC□2□□-□)

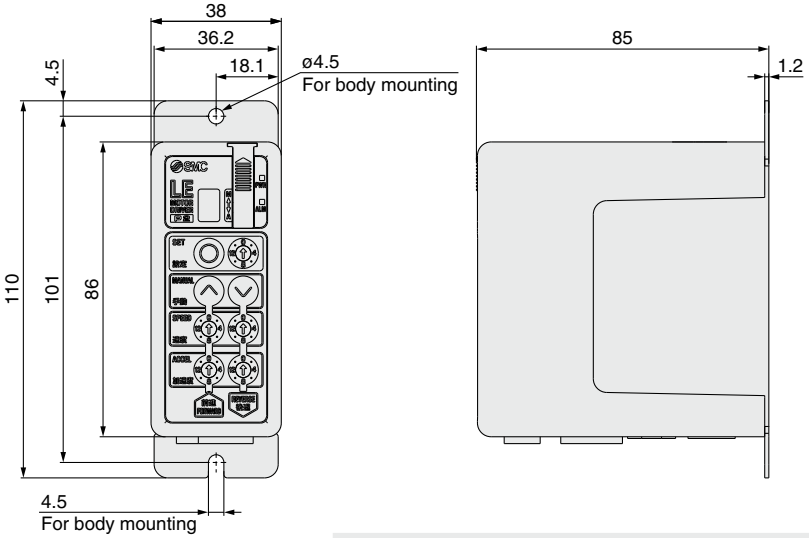

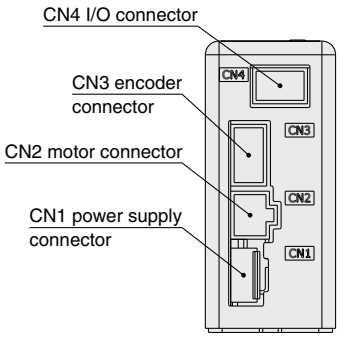

DIN rail mounting (LEC□2□□D-□)

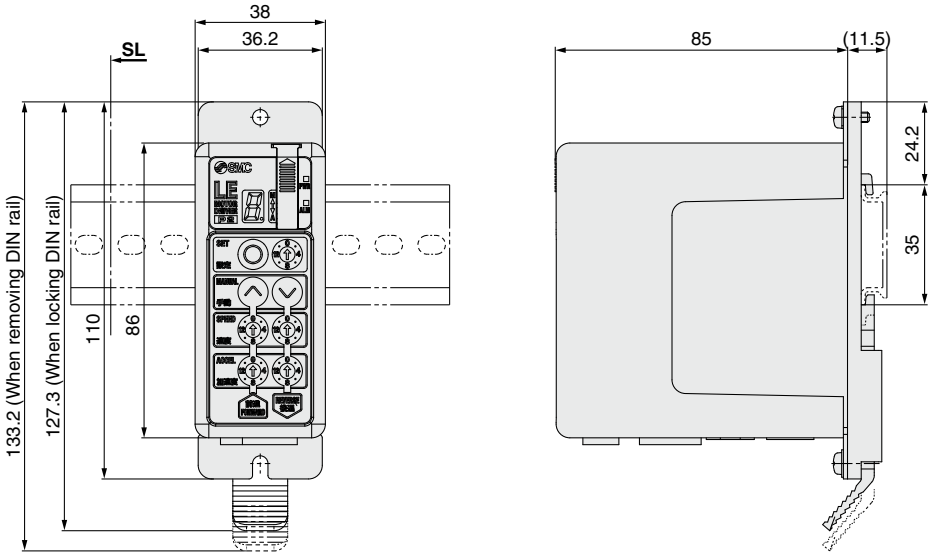

DIN rail
AXT100-DR-□

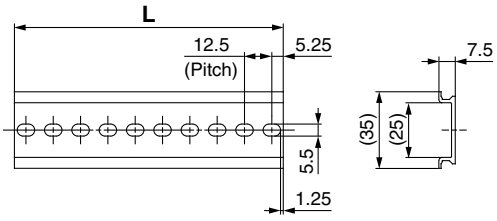

∗ For □, enter a number from the No. line in the table below.
Refer to the dimension drawings above for the mounting dimensions.

L Dimension [mm]

No.	1	2	3	4	5	6	7	8	9	10	11	12	13	14
L	23	35.5	48	60.5	73	85.5	98	110.5	123	135.5	148	160.5	173	185.5

No.	15	16	17	18	19	20	21	22	23	24	25	26	27	28
L	198	210.5	223	235.5	248	260.5	273	285.5	298	310.5	323	335.5	348	360.5

No.	28	29	30	31	32	33	34	35	36	37	38	39	40
L	360.5	373	385.5	398	410.5	423	435.5	448	460.5	473	485.5	498	510.5

DIN rail mounting adapter
LEC-1-D0 (with 2 mounting screws)

This should be used when the DIN rail mounting adapter is mounted onto a screw mounting type controller afterward.

Wiring Example 1

Power Supply Connector: CN1

* When you connect a CN1 power supply connector, use the power supply cable (LEC-CK1-1).
* The power supply cable (LEC-CK1-1) is an accessory.

CN1 Power Supply Connector Terminal for LECP2

Terminal name	Cable color	Function	Details
0V	Blue	Common supply (–)	The M 24V terminal, C 24V terminal, and BK RLS terminal are common (–).
M 24V	White	Motor power supply (+)	Motor power supply (+) supplied to the controller
C 24V	Brown	Control power supply (+)	Control power supply (+) supplied to the controller
BK RLS	Black	Lock release (+)	Input (+) for releasing the lock

Power supply cable for LECP2 (LEC-CK1-1)

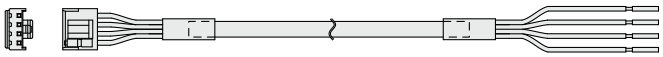

Wiring Example 2

Parallel I/O Connector: CN4

* When you connect a PLC to the CN4 parallel I/O connector, use the I/O cable (LEC-CK4-□).
* The wiring changes depending on the type of the parallel I/O (NPN or PNP).

■ **NPN**

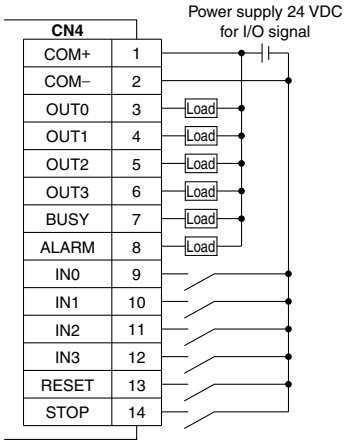

■ **PNP**

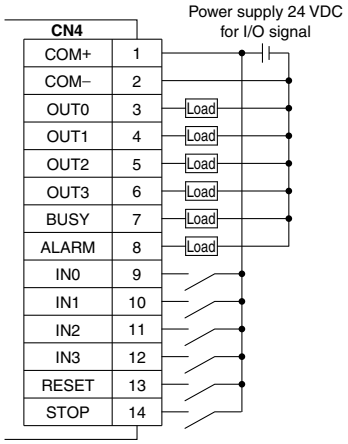

Input Signal

Name	Details
COM+	Connects the power supply 24 V for input/output signal
COM–	Connects the power supply 0 V for input/output signal
IN0 to IN3	• Instruction to drive (input as a combination of IN0 to IN3) Example - (instruction to drive for position no. 5) IN3: OFF, IN2: ON, IN1: OFF, IN0: ON • Instruction to return to origin (After the power is turned ON, first turn on IN0 or IN1. Return to origin using IN0: Return to origin by moving to the extended end. Return to origin using IN1: Return to origin by moving to the motor end.)
RESET	Alarm reset and operation interruption During operation: deceleration stop from position at which signal is input (servo ON maintained) While alarm is generated: alarm reset
STOP	Instruction to stop (after maximum deceleration stop, servo OFF)

Output Signal

Name	Details
OUT0 to OUT3	• Positioning completion (input as a combination of OUT0 to OUT3) Example - (positioning completion for position no. 3) OUT3: OFF, OUT2: OFF, OUT1: ON, OUT0: ON • Return to origin completion (Completion of return to origin using IN0: Only OUT0 is ON. Completion of return to origin using IN1: Only OUT1 is ON.)
BUSY	Outputs when the actuator is moving
*ALARM*1	OFF when alarm is generated or servo OFF

*1 Negative-logic (N.C.) circuit signal

Input Signal [IN0 - IN3] Position Number Chart ○: OFF ●: ON

Position number	IN3	IN2	IN1	IN0
1 (End side)	○	○	○	●
2 (Motor side)	○	○	●	○
3	○	○	●	●
4	○	●	○	○
5	○	●	○	●
6	○	●	●	○
7	○	●	●	●
8	●	○	○	○
9	●	○	○	●
10 (A)	●	○	●	○
11 (B)	●	○	●	●
12 (C)	●	●	○	○
13 (D)	●	●	○	●
14 (E)	●	●	●	○

Output Signal [OUT0 - OUT3] Position Number Chart ○: OFF ●: ON

Position number	OUT3	OUT2	OUT1	OUT0
1 (End side)	○	○	○	●
2 (Motor side)	○	○	●	○
3	○	○	●	●
4	○	●	○	○
5	○	●	○	●
6	○	●	●	○
7	○	●	●	●
8	●	○	○	○
9	●	○	○	●
10 (A)	●	○	●	○
11 (B)	●	○	●	●
12 (C)	●	●	○	○
13 (D)	●	●	○	●
14 (E)	●	●	●	○

Signal Timing

(1) Positioning Operation [Driving to the stroke end]

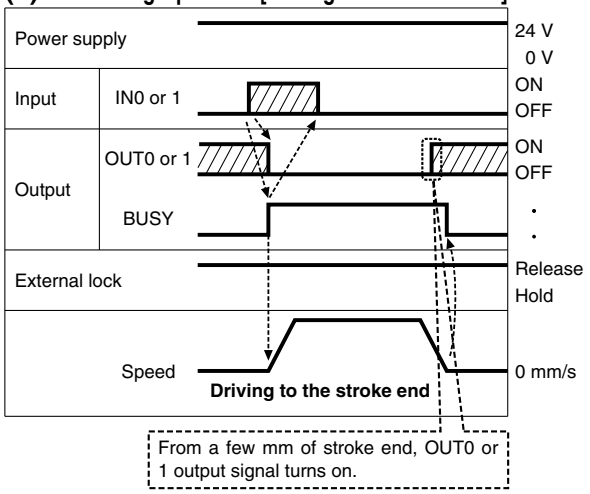

(2) Positioning Operation [Driving to the intermediate position]

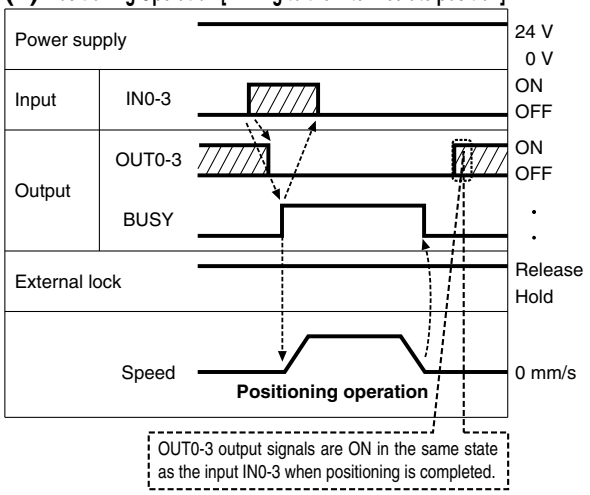

(3) Cut-off Stop (Reset Stop)

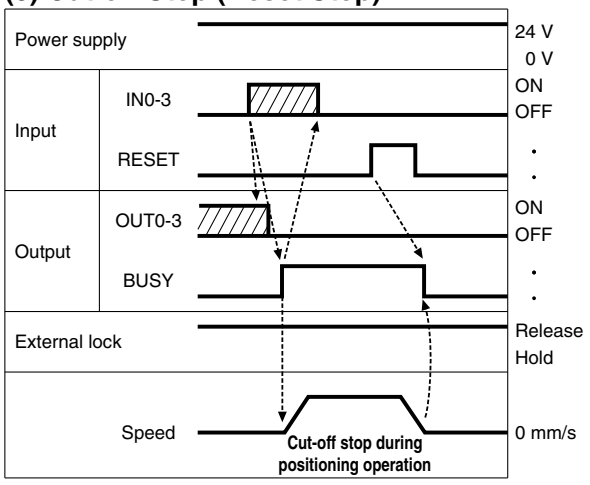

(4) Stop by the STOP Signal

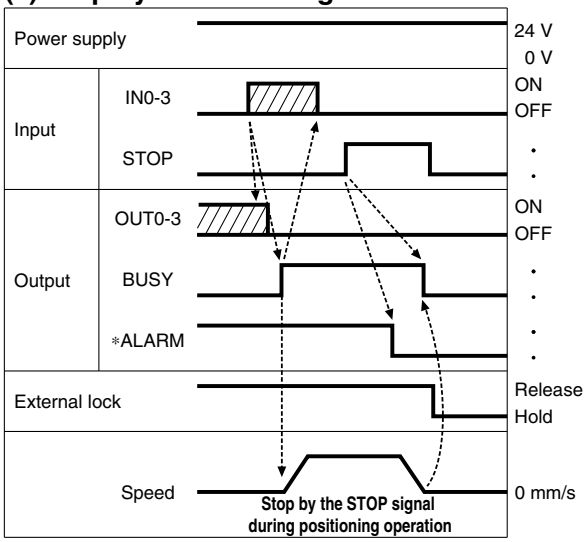

(5) Alarm Reset

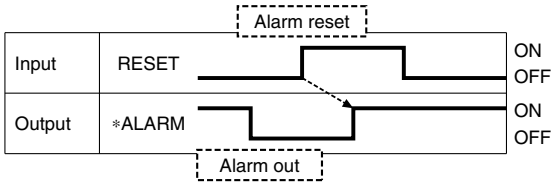

"∗ALARM" is expressed as a negative-logic circuit.

Options

[Power supply cable]

LEC−CK1−1

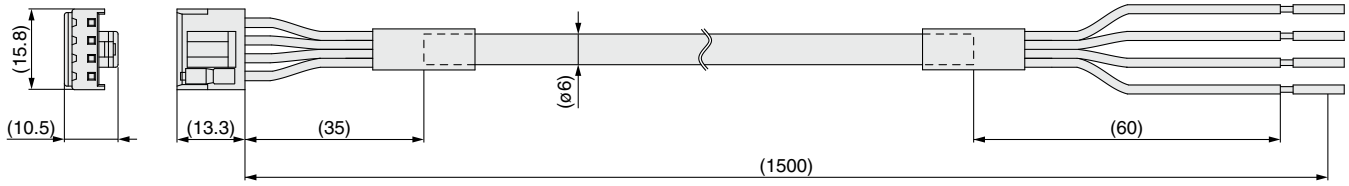

Terminal name	Covered color	Function
0V	Blue	Common supply (–)
M 24V	White	Motor power supply (+)
C 24V	Brown	Control power supply (+)
BK RLS	Black	Lock release (+)

∗ Conductor size: AWG20

Weight: 90 g

[I/O cable]

LEC−CK4−□

Cable length (L) [m]

1	1.5
3	3
5	5

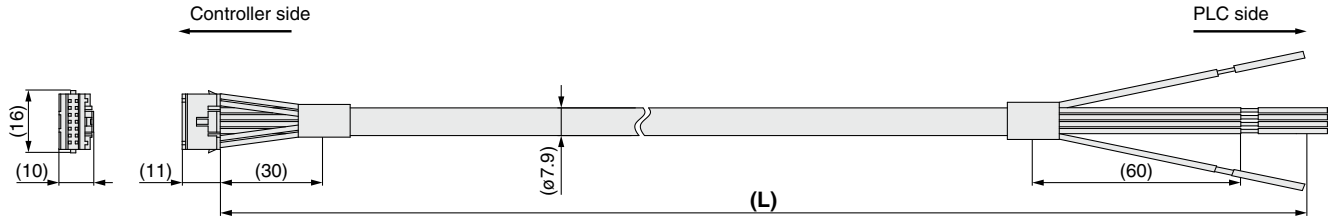

Terminal no.	Insulation color	Dot mark	Dot color	Function
1	Light brown	■	Black	COM+
2	Light brown	■	Red	COM–
3	Yellow	■	Black	OUT0
4	Yellow	■	Red	OUT1
5	Light green	■	Black	OUT2
6	Light green	■	Red	OUT3
7	Gray	■	Black	BUSY
8	Gray	■	Red	ALARM
9	White	■	Black	IN0
10	White	■	Red	IN1
11	Light brown	■■	Black	IN2
12	Light brown	■■	Red	IN3
13	Yellow	■■	Black	RESET
14	Yellow	■■	Red	STOP

∗ Conductor size: AWG26

∗ Parallel I/O signal is valid in auto mode. While the test function operates at manual mode, only the output is valid.

Weight

Product no.	Weight [g]
LEC-CK4-1	100
LEC-CK4-3	200
LEC-CK4-5	330

Compatible actuators

LEF LEY LES
LEP LER LEH

Step Motor Driver
LECPA Series

Click here for details.

RoHS

How to Order

LECP AN 1 □ – LEFS16B-100

Driver type

AN	Pulse input type (NPN)
AP	Pulse input type (PNP)

I/O cable length [m]

Nil	None
1	1.5
3	3*1
5	5*1

*1 Pulse input usable only with differential. Only 1.5 m cables usable with open collector.

Driver mounting

Nil	Screw mounting
D*1	DIN rail

*1 The DIN rail is not included. It must be ordered separately.

Actuator part number

Without cable specifications and actuator options
Example: Enter "**LEFS16B-100**" for the LEFS16B-100B-R1AN1D.

BC	Blank controller*1

*1 Requires dedicated software (LEC-BCW)

⚠Caution

[CE-compliant products]

① EMC compliance was tested by combining the electric actuator LE series and the LECPA series. The EMC depends on the configuration of the customer's control panel and the relationship with other electrical equipment and wiring. Therefore, compliance with the EMC directive cannot be certified for SMC components incorporated into the customer's equipment under actual operating conditions. As a result, it is necessary for the customer to verify compliance with the EMC directive for the machinery and equipment as a whole.

② For the LECPA series (step motor driver), EMC compliance was tested by installing a noise filter set (LEC-NFA).
Refer to page 736 for the noise filter set. Refer to the LECPA Operation Manual for installation.

[UL-compliant products]

When compliance with UL is required, the electric actuator and driver should be used with a UL1310 Class 2 power supply.

* When controller equipped type is selected when ordering the LE series, you do not need to order this driver.
* When pulse signals are open collector, order the current limiting resistor (LEC-PA-R-□) separately.

The driver is sold as single unit after the compatible actuator is set.

Confirm that the combination of the driver and actuator is correct.

<Check the following before use.>

① Check the actuator label for the model number. This number should match that of the driver.

② Check that the Parallel I/O configuration matches (NPN or PNP).

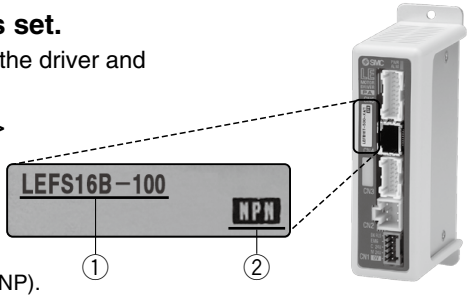

* Refer to the operation manual for using the products. Please download it via our website: https://www.smcworld.com

Precautions for blank controllers (LECPA□□-BC)

A blank controller is a controller to which the customer can write the data of the actuator it is to be combined and used with. Use the dedicated software (LEC-BCW) for data writing.

- Please download the dedicated software (LEC-BCW) via our website.
- Order the communication cable for controller setting (LEC-W2A-C) separately to use this software.

SMC website:
https://www.smcworld.com

Specifications

Item	LECPA
Compatible motor	Step motor (Servo/24 VDC)
Power supply*1	Power voltage: 24 VDC ±10%*2 [Including motor drive power, control power, stop, lock release]
Parallel input	5 inputs (Except photo-coupler isolation, pulse input terminal, COM terminal)
Parallel output	9 outputs (Photo-coupler isolation)
Pulse signal input	Maximum frequency: 60 kpps (Open collector), 200 kpps (Differential) Input method: 1 pulse mode (Pulse input in direction), 2 pulse mode (Pulse input in differing directions)
Compatible encoder	Incremental A/B phase (Encoder resolution: 800 pulse/rotation)
Serial communication	RS485 (Modbus protocol compliant)
Memory	EEPROM
LED indicator	LED (Green/Red) one of each
Lock control	Forced-lock release terminal*3
Cable length [m]	I/O cable: 1.5 or less (Open collector), 5 or less (Differential), Actuator cable: 20 or less
Cooling system	Natural air cooling
Operating temperature range [°C]	0 to 40 (No freezing)
Operating humidity range [%RH]	90 or less (No condensation)
Storage temperature range [°C]	−10 to 60 (No freezing)
Storage humidity range [%RH]	90 or less (No condensation)
Insulation resistance [MΩ]	Between the housing and SG terminal: 50 (500 VDC)
Weight [g]	120 (Screw mounting), 140 (DIN rail mounting)

*1 Do not use the power supply of "inrush current prevention type" for the driver power supply. When compliance with UL is required, the electric actuator and driver should be used with a UL1310 Class 2 power supply.

*2 The power consumption changes depending on the actuator model. Refer to the specifications of actuator for more details.

*3 Applicable to non-magnetizing locks

SMC

How to Mount

a) Screw mounting (LECPA□□-□) (Installation with two M4 screws)

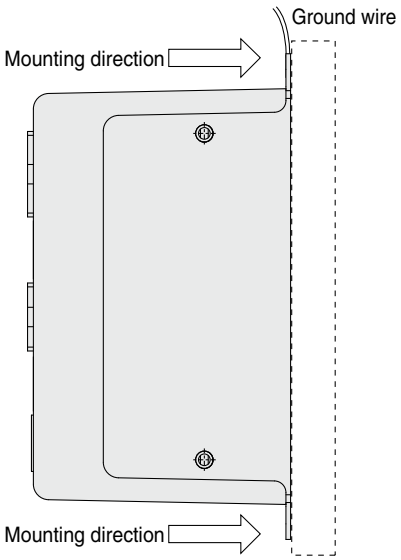

b) DIN rail mounting (LECPA□□D-□) (Installation with the DIN rail)

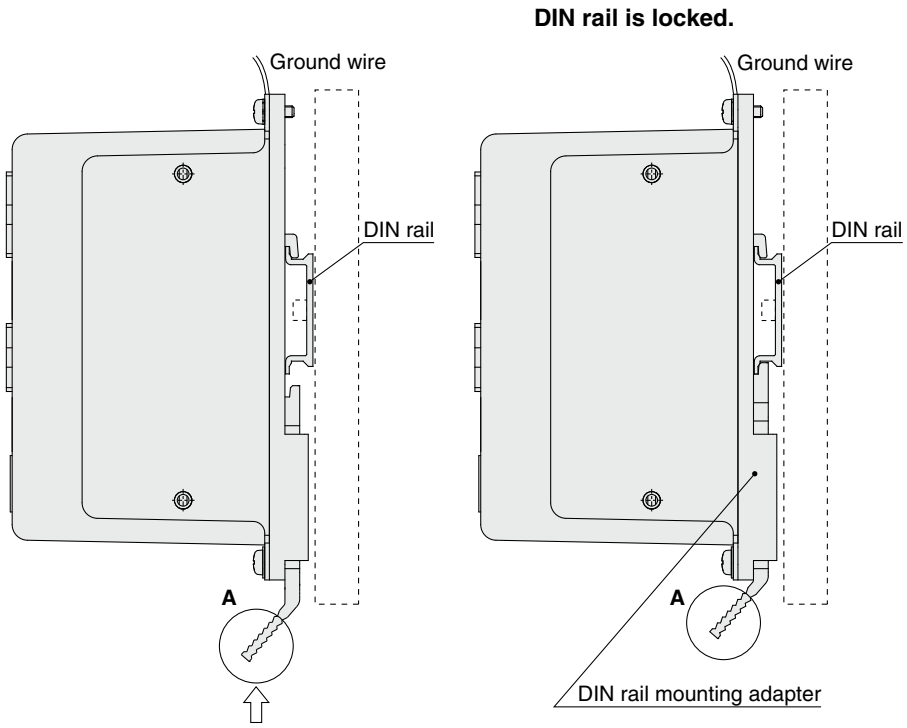

Hook the driver on the DIN rail and press the lever of section **A** in the arrow direction to lock it.

∗ The space between the drivers should be 10 mm or more.

DIN rail
AXT100-DR-□

∗ For □, enter a number from the No. line in the table below.
Refer to the dimension drawings on page 733 for the mounting dimensions.

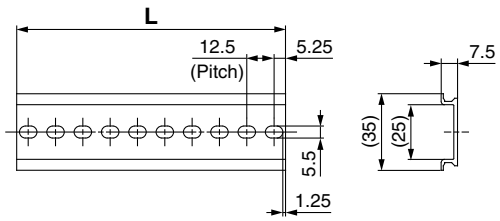

L Dimensions [mm]

No.	1	2	3	4	5	6	7	8	9	10	11	12	13	14	15	16	17	18	19	20
L	23	35.5	48	60.5	73	85.5	98	110.5	123	135.5	148	160.5	173	185.5	198	210.5	223	235.5	248	260.5
No.	21	22	23	24	25	26	27	28	29	30	31	32	33	34	35	36	37	38	39	40
L	273	285.5	298	310.5	323	335.5	348	360.5	373	385.5	398	410.5	423	435.5	448	460.5	473	485.5	498	510.5

DIN rail mounting adapter
LEC-2-D0 (with 2 mounting screws)

This should be used when the DIN rail mounting adapter is mounted onto a screw mounting type driver afterward.

Dimensions

a) Screw mounting (LECPA□□-□)

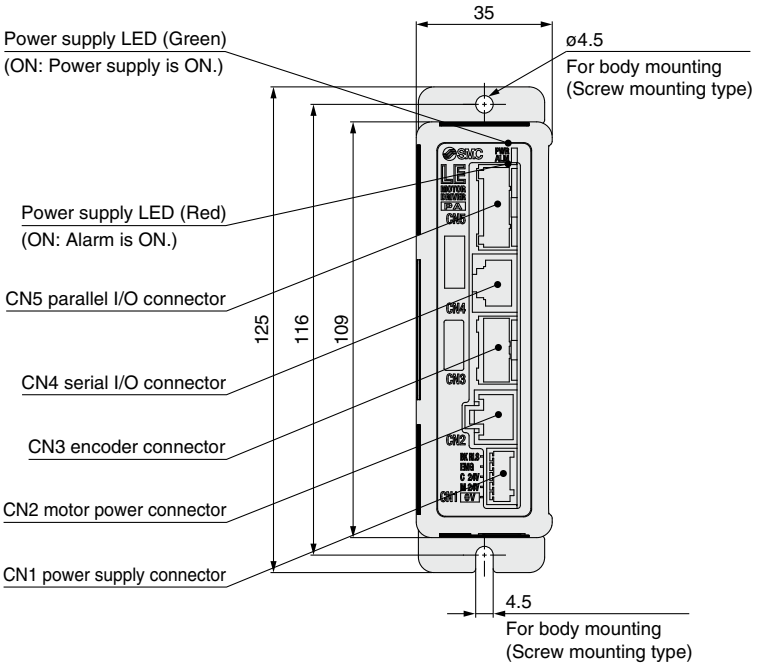

b) DIN rail mounting (LECPA□□D-□)

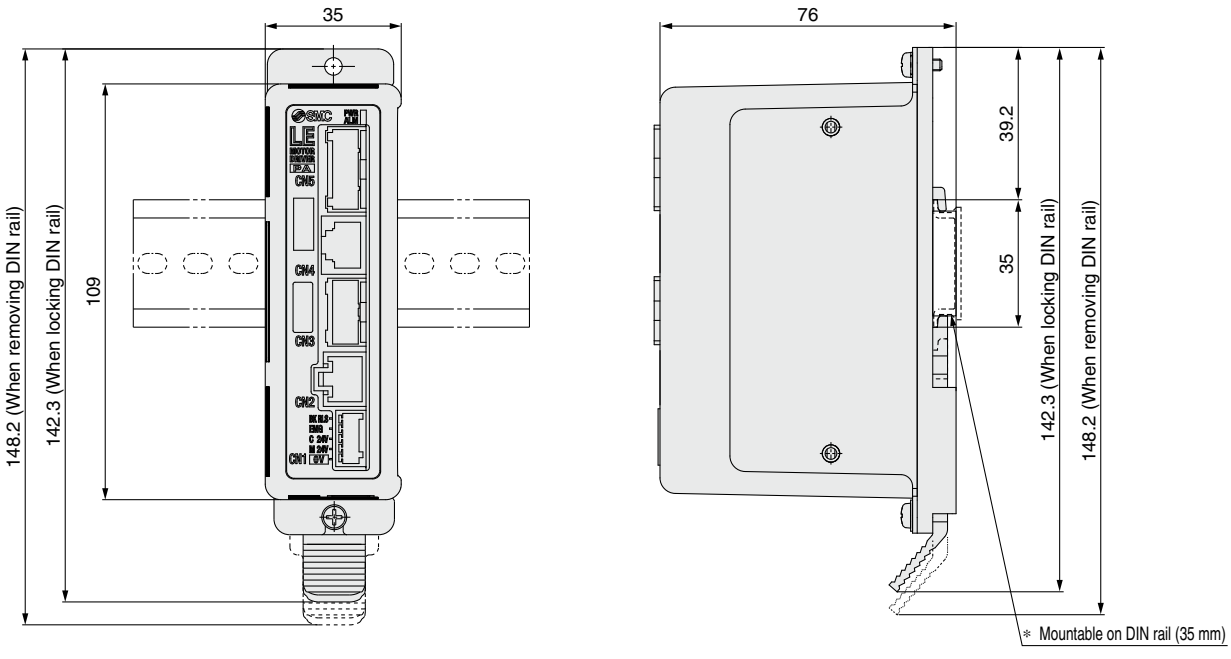

Wiring Example 1

Power Supply Connector: CN1

* The power supply plug is an accessory.
<Applicable cable size> AWG20 (0.5 mm^2), cover diameter 2.0 mm or less

CN1 Power Supply Connector Terminal for LECPA (PHOENIX CONTACT FK-MC0.5/5-ST-2.5)

Terminal name	Function	Details
0V	Common supply (–)	The M 24V terminal, C 24V terminal, EMG terminal, and BK RLS terminal are common (–).
M 24V	Motor power supply (+)	Motor power supply (+) supplied to the driver
C 24V	Control power supply (+)	Control power supply (+) supplied to the driver
EMG	Stop (+)	Input (+) for releasing the stop
BK RLS	Lock release (+)	Input (+) for releasing the lock

Power supply plug for LECPA: LEC-D-1-1

* Accessory

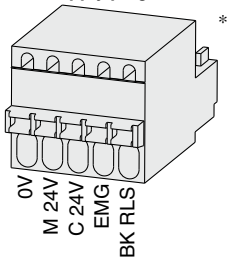

Wiring Example 2

Parallel I/O Connector: CN5

* When you connect a PLC to the CN5 parallel I/O connector, use the I/O cable (LEC-CL5-□).
* The wiring changes depending on the type of parallel I/O (NPN or PNP).

LECPAN□□-□ (NPN)

CN5		
Terminal name	Function	Pin no.
COM+	24 V	1
COM–	0 V	2
NP+	Pulse signal	3
NP–	Pulse signal	4
PP+	Pulse signal	5
PP–	Pulse signal	6
SETUP	Input	7
RESET	Input	8
SVON	Input	9
CLR	Input	10
TL	Input	11
TLOUT	Output	12
WAREA	Output	13
BUSY	Output	14
SETON	Output	15
INP	Output	16
SVRE	Output	17
∗ESTOP∗2	Output	18
∗ALARM∗2	Output	19
AREA	Output	20
FG	Round terminal 0.5-5	

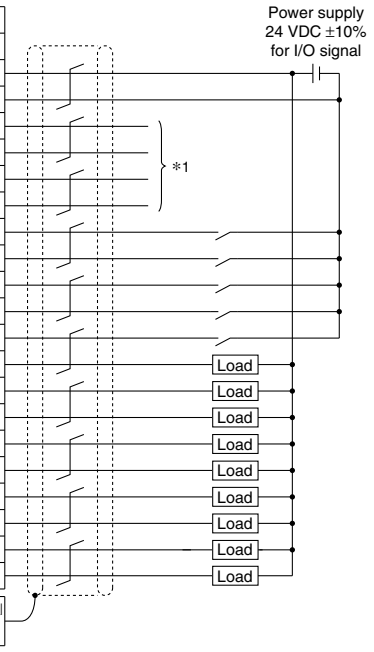

LECPAP□□-□ (PNP)

CN5		
Terminal name	Function	Pin no.
COM+	24 V	1
COM–	0 V	2
NP+	Pulse signal	3
NP–	Pulse signal	4
PP+	Pulse signal	5
PP–	Pulse signal	6
SETUP	Input	7
RESET	Input	8
SVON	Input	9
CLR	Input	10
TL	Input	11
TLOUT	Output	12
WAREA	Output	13
BUSY	Output	14
SETON	Output	15
INP	Output	16
SVRE	Output	17
∗ESTOP∗2	Output	18
∗ALARM∗2	Output	19
AREA	Output	20
FG	Round terminal 0.5-5	

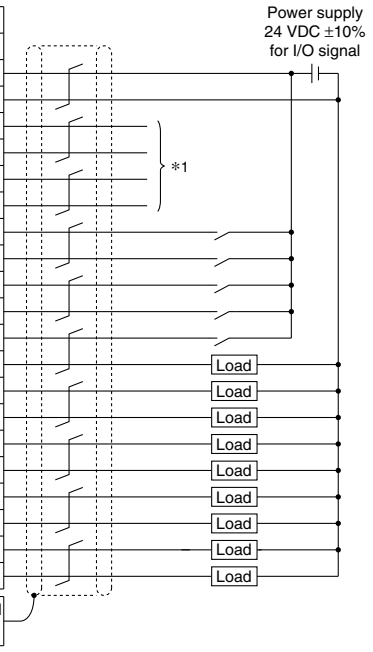

∗1 For pulse signal wiring method, refer to the "Pulse Signal Wiring Details."
∗2 Output when the power supply of the driver is ON. (N.C.)

Input Signal

Name	Details
COM+	Connects the power supply 24 V for input/output signal
COM–	Connects the power supply 0 V for input/output signal
SETUP	Instruction to return to origin
RESET	Alarm reset
SVON	Servo ON instruction
CLR	Deviation reset
TL	Instruction to pushing operation

Output Signal

Name	Details
BUSY	Outputs when the actuator is moving
SETON	Outputs when returning to origin
INP	Outputs when target position is reached
SVRE	Outputs when servo is ON
∗ESTOP∗3	OFF when EMG stop is instructed
∗ALARM∗3	OFF when alarm is generated
AREA	Outputs within the area output setting range
WAREA	Outputs within W-AREA output setting range
TLOUT	Outputs during pushing operation

∗3 Negative-logic (N.C.) circuit signal

Pulse Signal Wiring Details

•Pulse signal output of positioning unit is differential output

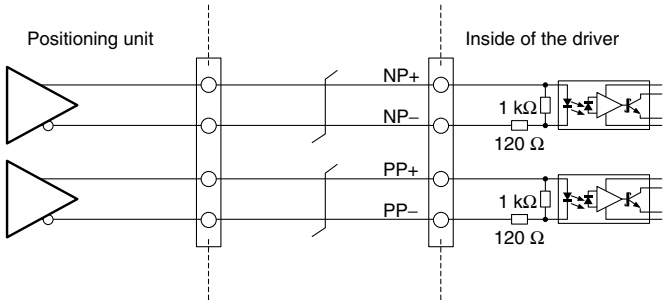

•Pulse signal output of positioning unit is open collector output

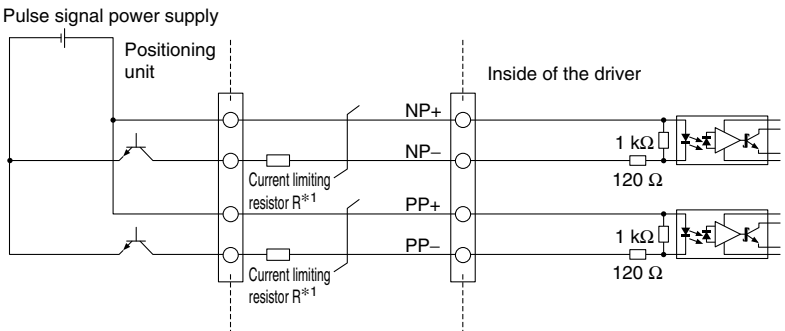

∗1 Connect the current limiting resistor R in series to correspond to the pulse signal voltage.

Pulse signal power supply voltage	Current limiting resistor R specifications	Current limiting resistor part no.
24 VDC ±10%	3.3 kΩ ±5% (0.5 W or more)	LEC-PA-R-332
5 VDC ±5%	390 Ω ±5% (0.1 W or more)	LEC-PA-R-391

Signal Timing

Return to Origin

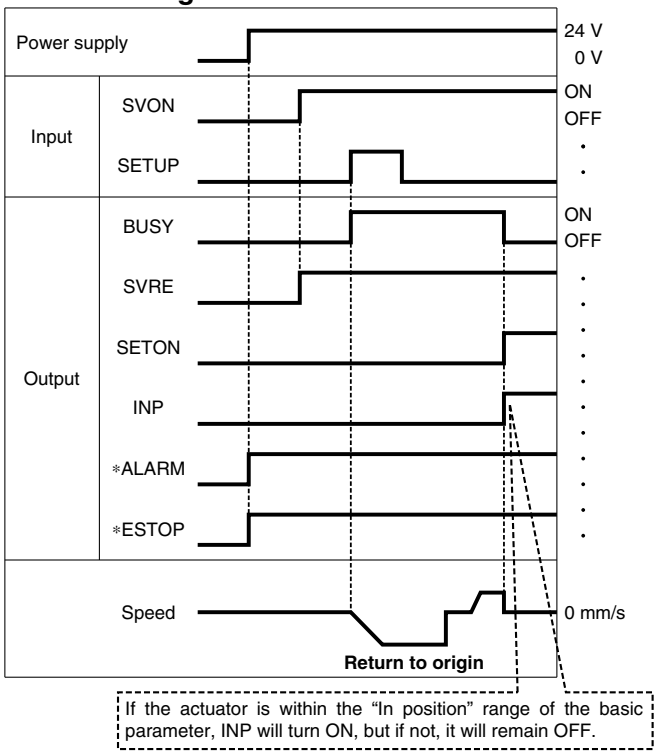

∗ "∗ALARM" and "∗ESTOP" are expressed as negative-logic circuits.

Positioning Operation

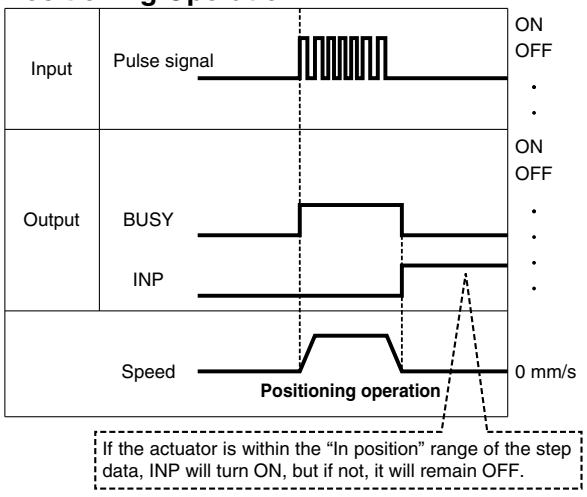

Pushing Operation

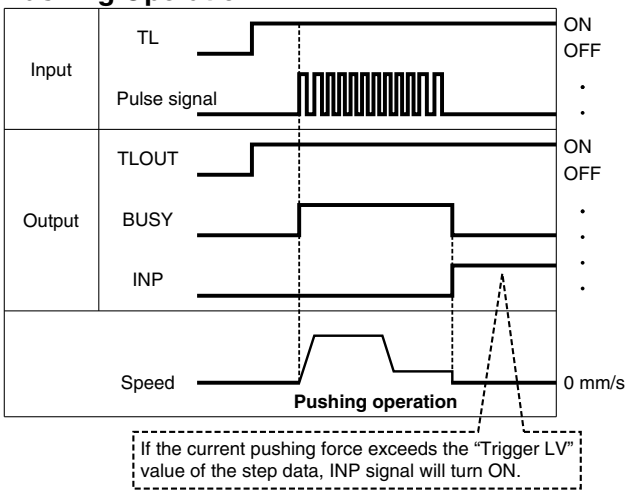

∗ If pushing operation is stopped when there is no pulse deviation, the moving part of the actuator may pulsate.

Alarm Reset

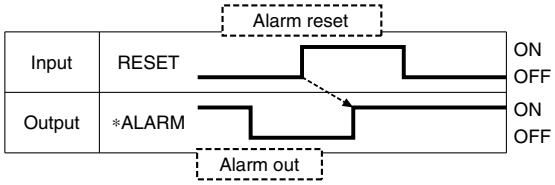

∗ "∗ALARM" is expressed as a negative-logic circuit.

Options

[I/O cable]

LEC-C L5-1

I/O cable type

L5	For LECPA

I/O cable length (L)

1	1.5 m
3	3 m*1
5	5 m*1

*1 Pulse input usable only with differential. Only 1.5 m cables usable with open collector

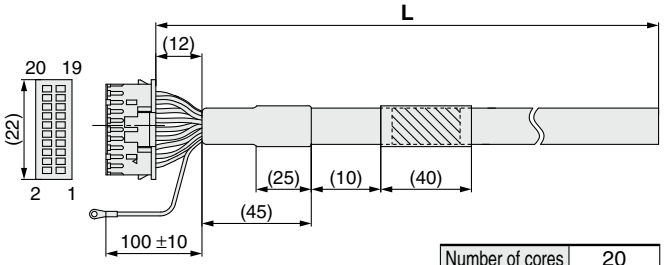

Number of cores	20
AWG size	24

Pin no.	Insulation color	Dot mark	Dot color
1	Light brown	■	Black
2	Light brown	■	Red
3	Yellow	■	Black
4	Yellow	■	Red
5	Light green	■	Black
6	Light green	■	Red
7	Gray	■	Black
8	Gray	■	Red
9	White	■	Black
10	White	■	Red
11	Light brown	■■	Black

Pin no.	Insulation color	Dot mark	Dot color
12	Light brown	■■	Red
13	Yellow	■■	Black
14	Yellow	■■	Red
15	Light green	■■	Black
16	Light green	■■	Red
17	Gray	■■	Black
18	Gray	■■	Red
19	White	■■	Black
20	White	■■	Red
Round terminal 0.5-5	Green		

Weight

Product no.	Weight [g]
LEC-CL5-1	190
LEC-CL5-3	370
LEC-CL5-5	610

[Noise filter set]
Step Motor Driver (Pulse Input Type)

LEC-NFA

Contents of the set: 2 noise filters
(Manufactured by WURTH ELEKTRONIK: 74271222)

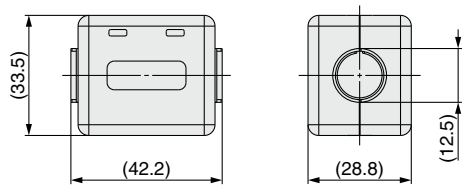

* Refer to the LECPA series Operation Manual for installation.

[Current limiting resistor]

This optional resistor (LEC-PA-R-□) is used when the pulse signal output of the positioning unit is open collector output.

LEC-PA-R-□

Current limiting resistor

Symbol	Resistance	Pulse signal power supply voltage
332	3.3 kΩ ±5%	24 VDC ±10%
391	390 Ω ±5%	5 VDC ±5%

* Select a current limiting resistor that corresponds to the pulse signal power supply voltage.
* For the LEC-PA-R-□, two pieces are shipped as a set.
* For pulse signal wiring details, refer to page 734.

Compatible actuators

LEF LEL LEM
LEY LES LEP
LER LEH

Step Motor Controller

JXCE1/91/P1/D1/L□/M1 Series

Click here for details.

RoHS

How to Order

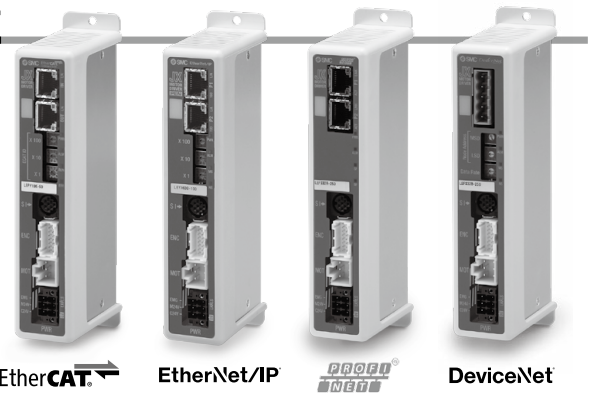

JXC D 1 7 T –

Communication protocol

		Standard	With STO sub-function
E	EtherCAT	●	—
9	EtherNet/IP™	●	—
P	PROFINET	●	—
D	DeviceNet®	●	—
L	IO-Link	●	●
M	CC-Link	●	—

Number of axes, Special specification

1	1 axis, Standard
F	1 axis, With STO sub-function

Mounting

7	Screw mounting
8∗1	DIN rail

∗1 The DIN rail is not included. It must be ordered separately. (Refer to page 745.)



Option

Nil	Without option
S	With straight type communication plug
T	With T-branch type communication plug

∗ Select "Nil" for anything other than JXCD1 and JXCM1.

Actuator part number

Without cable specifications and actuator options Example: Enter "**LEFS16B-100**" for the LEFS16B-100B-S1□□.	
BC	Blank controller∗1

∗1 Requires dedicated software (JXC-BCW)
Refer to page 746-1 for the applicable controller version for the battery-less absolute type

The controller is sold as single unit after the compatible actuator is set.

Confirm that the combination of the controller and actuator is correct.

① Check the actuator label for the model number. This number should match that of the controller.

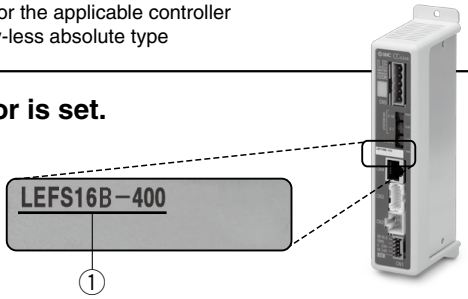

∗ Refer to the operation manual for using the products. Please download it via our website: https://www.smcworld.com

Precautions for blank controllers (JXC□□□□-BC)

A blank controller is a controller to which the customer can write the data of the actuator it is to be combined and used with. Use the dedicated software (JXC-BCW) for data writing.

- Please download the dedicated software (JXC-BCW) via our website.
- Order the communication cable for controller setting (JXC-W2A-C) and USB cable (LEC-W2-U) separately to use this software.

SMC website: https://www.smcworld.com

Specifications

Model			JXCE1	JXC91	JXCP1	JXCD1	JXCL1	JXCLF	JXCM1
Network			EtherCAT	EtherNet/IP™	PROFINET	DeviceNet®	IO-Link		CC-Link
Compatible motor			Step motor (Servo/24 VDC)						
Power supply			Power voltage: 24 VDC ±10%						
Current consumption (Controller)			200 mA or less	130 mA or less	200 mA or less	100 mA or less	100 mA or less		100 mA or less
Compatible encoder			Incremental/Battery-less absolute (Refer to page 746-1 for the applicable controller version.)						
Communication specifications	Applicable system	**Protocol**	EtherCAT*2	EtherNet/IP™*2	PROFINET*2	DeviceNet®	IO-Link		CC-Link
		Version*1	Conformance Test Record V.1.2.6	Volume 1 (Edition 3.14) Volume 2 (Edition 1.15)	Specification Version 2.32	Volume 1 (Edition 3.14) Volume 3 (Edition 1.13)	Version 1.1 Port Class A		Ver. 1.10
	Communication speed		100 Mbps*2	10/100 Mbps*2 (Automatic negotiation)	100 Mbps*2	125/250/500 kbps	230.4 kbps (COM3)		156 kbps, 625 kbps, 2.5 Mbps, 5 Mbps, 10 Mbps
	Configuration file*3		ESI file	EDS file	GSDML file	EDS file	IODD file		CSP+ file
	I/O occupation area		Input 20 bytes Output 36 bytes	Input 36 bytes Output 36 bytes	Input 36 bytes Output 36 bytes	Input 4, 10, 20 bytes Output 4, 12, 20, 36 bytes	Input 14 bytes Output 22 bytes		1 station, 2 stations, 4 stations
	Terminating resistor		Not included						
Memory			EEPROM						
LED indicator			PWR, RUN, ALM, ERR	PWR, ALM, MS, NS	PWR, ALM, SF, BF	PWR, ALM, MS, NS	PWR, ALM, COM		PWR, ALM, L ERR, L RUN
Cable length [m]			Actuator cable: 20 or less						
Cooling system			Natural air cooling						
Operating temperature range [°C]			0 to 55 (No freezing)*4						
Operating humidity range [%RH]			90 or less (No condensation)						
Insulation resistance [MΩ]			Between all external terminals and the case: 50 (500 VDC)						
Safety function			—			—		STO, SS1-t	—
Safety standards			—			—		EN 61508 SIL 3*5 EN 62061 SIL CL 3*5 EN ISO 13849-1 Cat. 3 PL e*5	—
Weight [g]		Screw mounting	220	210	220	210	190	220	170
		DIN rail mounting	240	230	240	230	210	240	190

*1 Please note that versions are subject to change.
*2 Use a shielded communication cable with CAT5 or higher for the PROFINET, EtherNet/IP™, and EtherCAT.
*3 The files can be downloaded from the SMC website.
*4 The operating temperature range for both controller version 1 products and controller version 2 products is 0 to 40°C. Refer to page 746 for details on identifying controller version symbols.
*5 The above safety integrity level is the max. value. The achievable level varies depending on the configuration and inspection method of the component. Be sure to refer to "Safety Manual: JXC#-OMY0009" for more information.

■Trademark
EtherNet/IP® is a registered trademark of ODVA, Inc.
DeviceNet® is a registered trademark of ODVA, Inc.
EtherCAT® is registered trademark and patented technology, licensed by Beckhoff Automation GmbH, Germany.

Example of Operation Command

In addition to the step data input of 64 points maximum in each communication protocol, the changing of each parameter can be performed in real time via numerical data defined operation.
* Numerical values other than "Moving force," "Area 1," and "Area 2" can be used to perform operation under numerical instructions from JXCL□.

<Application example> Movement between 2 points

No.	Movement mode	Speed	Position	Acceleration	Deceleration	Pushing force	Trigger LV	Pushing speed	Moving force	Area 1	Area 2	In position
0	1: Absolute	100	10	3000	3000	0	0	0	100	0	0	0.50
1	1: Absolute	100	100	3000	3000	0	0	0	100	0	0	0.50

<Step no. defined operation>
Sequence 1: Servo ON instruction
Sequence 2: Instruction to return to origin
Sequence 3: Specify step data No. 0 to input the DRIVE signal.
Sequence 4: Specify step data No. 1 after the DRIVE signal has been temporarily turned OFF to input the DRIVE signal.

<Numerical data defined operation>
Sequence 1: Servo ON instruction
Sequence 2: Instruction to return to origin
Sequence 3: Specify step data No. 0 and turn ON the input instruction flag (position). Input 10 in the target position. Subsequently the start flag turns ON.
Sequence 4: Turn ON step data No. 0 and the input instruction flag (position) to change the target position to 100 while the start flag is ON.

The same operation can be performed with any operation command.

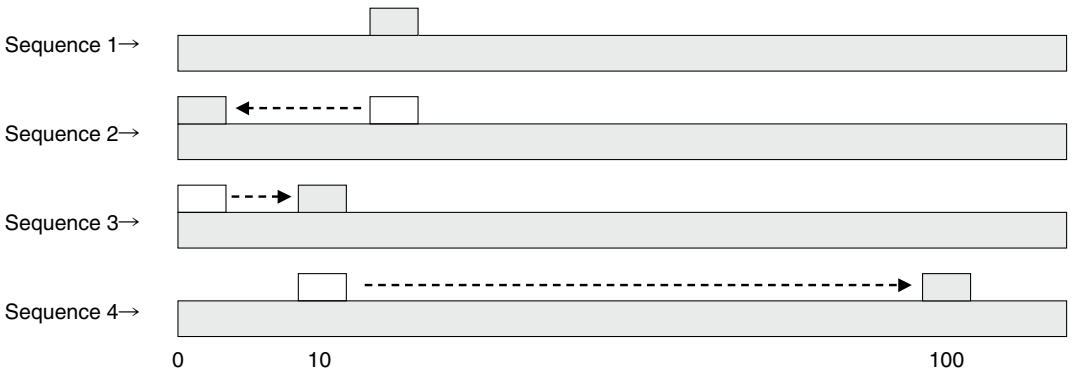

Dimensions

JXCE1

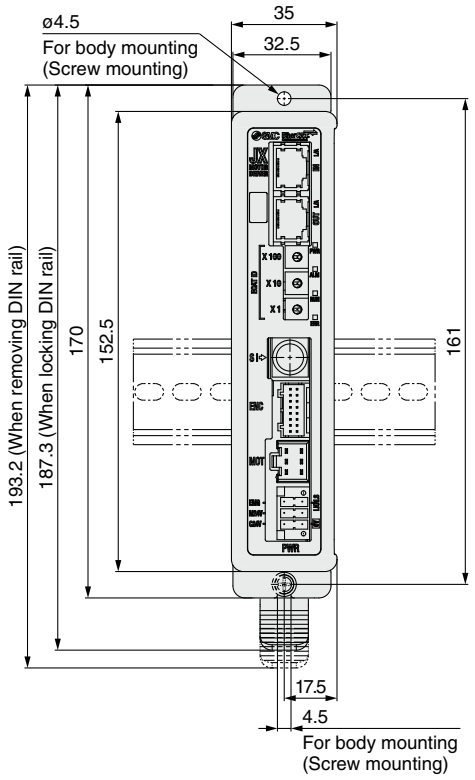

JXC91

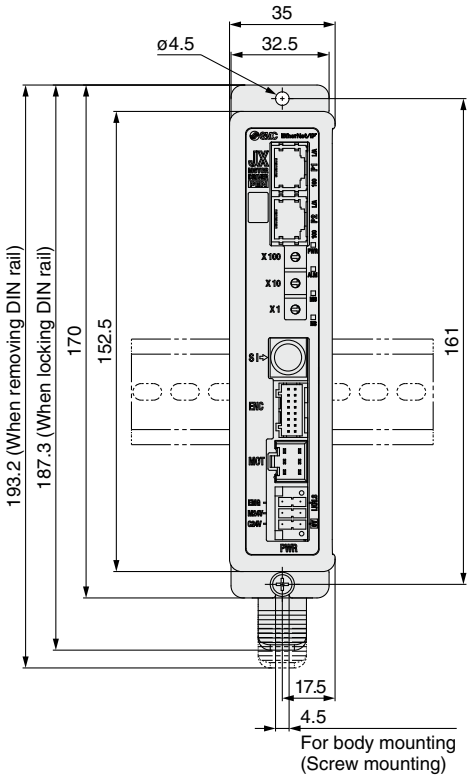

JXCE1/JXC91

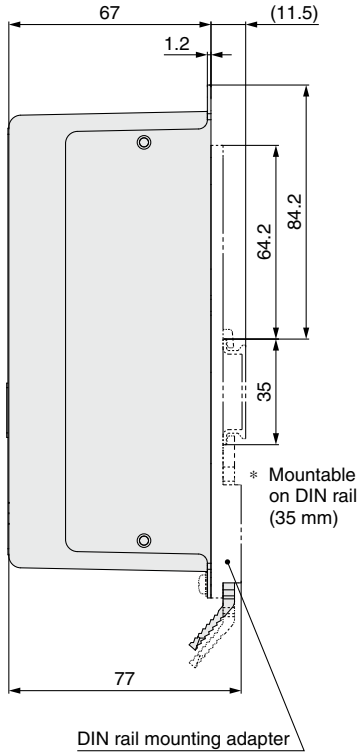

JXCP1

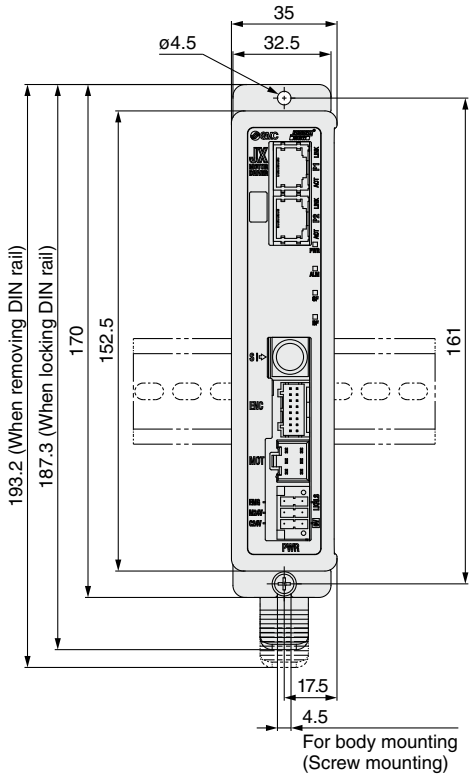

JXCD1

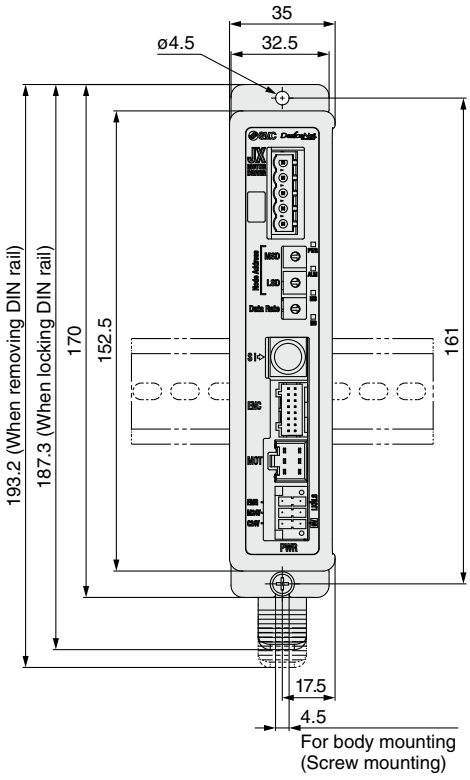

JXCP1/JXCD1

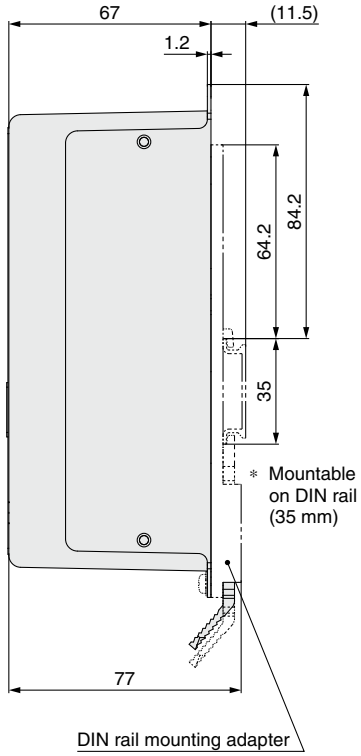

Dimensions

JXCL1

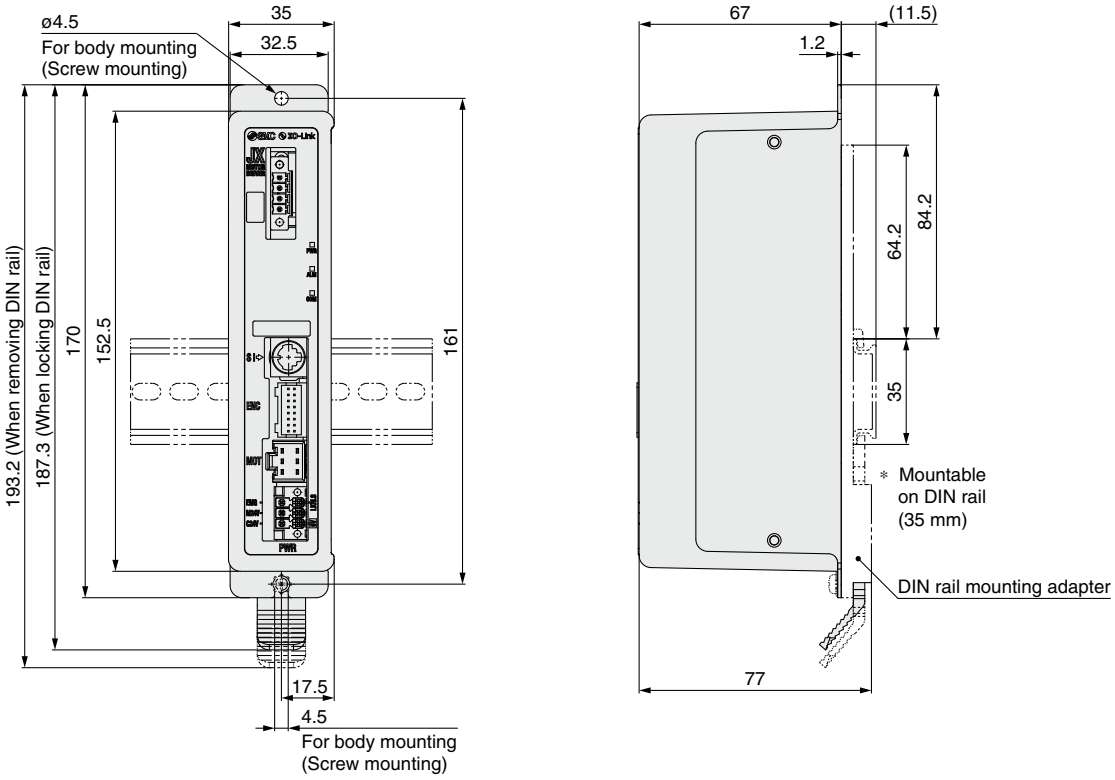

JXCM1

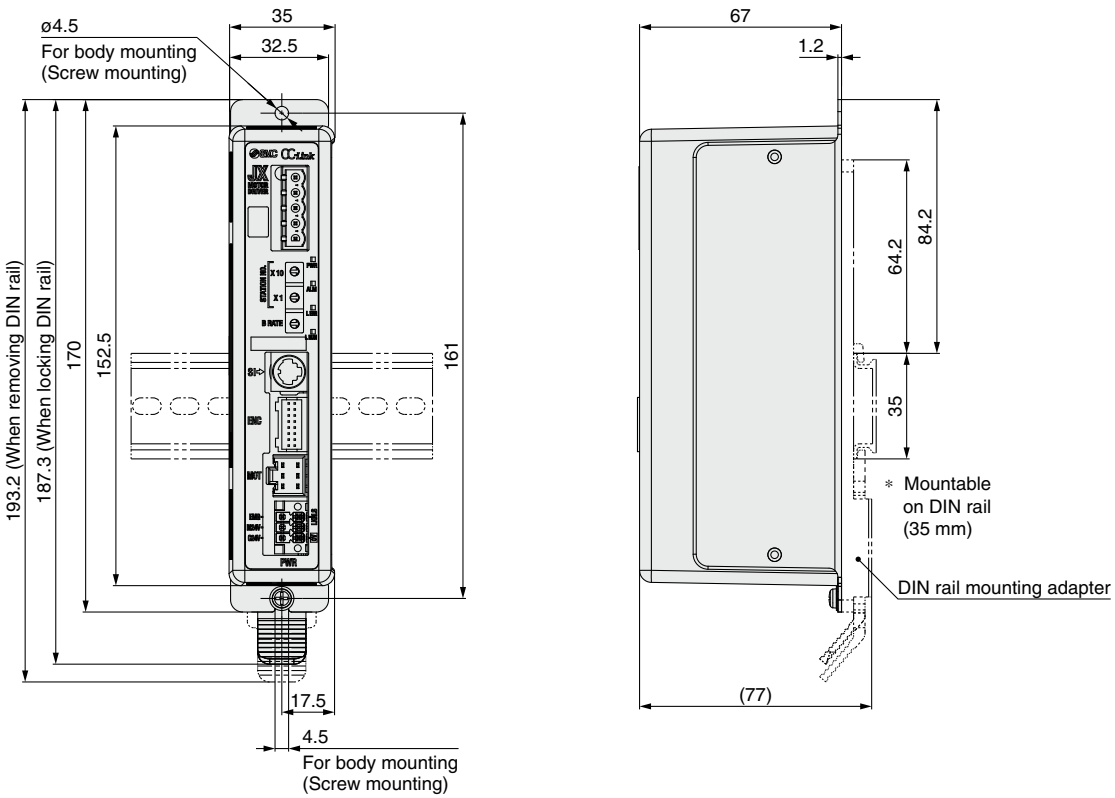

Dimensions

JXCLF

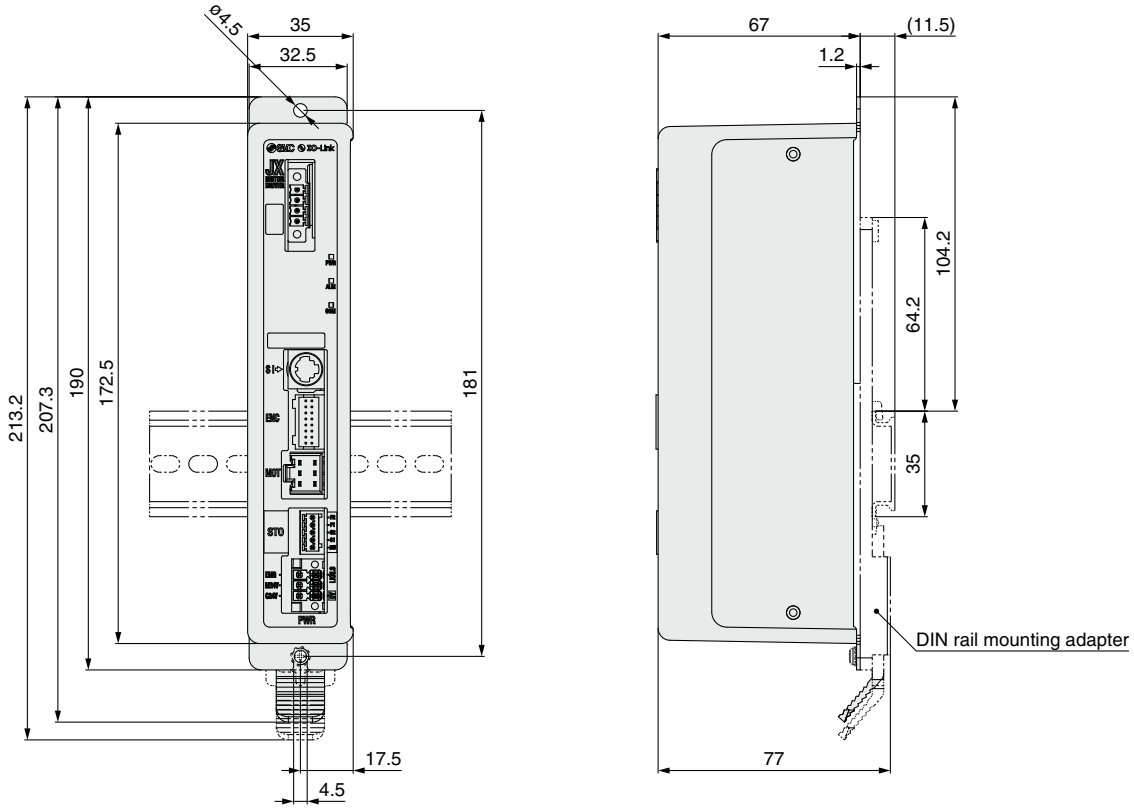

DIN rail
AXT100-DR-□

∗ For □, enter a number from the No. line in the table below.
Refer to the dimension drawings on pages 744 and 744-1 for the mounting dimensions.

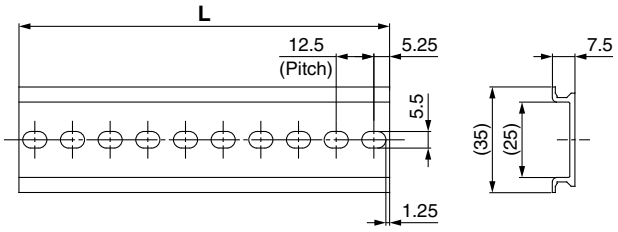

L Dimensions [mm]

No.	1	2	3	4	5	6	7	8	9	10	11	12	13	14	15	16	17	18	19	20
L	23	35.5	48	60.5	73	85.5	98	110.5	123	135.5	148	160.5	173	185.5	198	210.5	223	235.5	248	260.5

No.	21	22	23	24	25	26	27	28	29	30	31	32	33	34	35	36	37	38	39	40
L	273	285.5	298	310.5	323	335.5	348	360.5	373	385.5	398	410.5	423	435.5	448	460.5	473	485.5	498	510.5

DIN rail mounting adapter
LEC-3-D0 (with 2 mounting screws)

This should be used when the DIN rail mounting adapter is mounted onto a screw mounting type controller afterward.

Options

■ Communication cable for controller setting

① **Communication cable JXC-W2A-C**

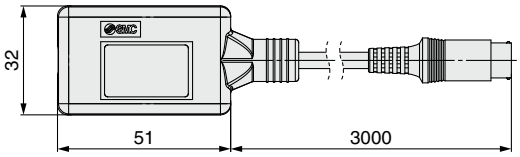

∗ It can be connected to the controller directly.

② **USB cable LEC-W2-U**

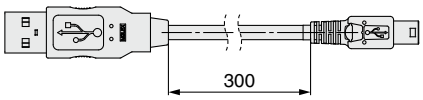

③ **Controller setting kit JXC-W2A**

A set which includes a communication cable (JXC-W2A-C) and a USB cable (LEC-W2-U)

<Controller setting software/USB driver>
· Controller setting software
· USB driver (For JXC-W2A-C)
Download from SMC's website: https://www.smcworld.com

Hardware Requirements

OS	Windows®7, Windows®8.1, Windows®10
Communication interface	USB 1.1 or USB 2.0 ports
Display	1024 x 768 or more

∗ Windows®7, Windows®8.1, and Windows®10 are registered trademarks of Microsoft Corporation in the United States.

■ Conversion cable P5062-5 (Cable length: 300 mm)

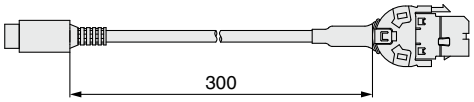

∗ To connect the teaching box (LEC-T1-3□G□) or communication cable for controller setting (LEC-W2A-C) to the controller, a conversion cable is required.

■ DIN rail mounting adapter LEC-3-D0

∗ With 2 mounting screws

This should be used when the DIN rail mounting adapter is mounted onto a screw mounting type controller afterward.

■ DIN rail AXT100-DR-□

∗ For □, enter a number from the No. line in the table on page 744-1. Refer to the dimension drawings on pages 743 to 744-1 for the mounting dimensions.

■ Teaching box

LEC − T1 − 3 J G □



Teaching box

Cable length [m]

3	3

Initial language

J	Japanese
E	English

∗ The displayed language can be changed to English or Japanese.

Stop switch

G	Equipped with stop switch

Enable switch

Nil	None
S	Equipped with enable switch

∗ Interlock switch for jog and test function

Specifications

Item	Description
Switch	Stop switch, Enable switch (Option)
Cable length [m]	3
Enclosure	IP64 (Except connector)
Operating temperature range [°C]	5 to 50
Operating humidity range [%RH]	90 or less (No condensation)
Weight [g]	350 (Except cable)

Options

■ Power supply plug JXC-CPW

∗ The power supply plug is an accessory.

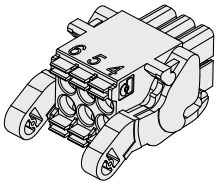

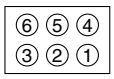

① C24V ④ 0V
② M24V ⑤ N.C.
③ EMG ⑥ LK RLS

Power supply plug

Terminal name	Function	Details
0V	Common supply (–)	The M24V terminal, C24V terminal, EMG terminal, and LK RLS terminal are common (–).
M24V	Motor power supply (+)	Motor power supply (+) of the controller
C24V	Control power supply (+)	Control power supply (+) of the controller
EMG	Stop (+)	Connection terminal of the external stop circuit
LK RLS	Lock release (+)	Connection terminal of the lock release switch

■ STO signal plug JXC-CSTO





STO signal plug

Pin no.	Signal name	Details
1	24V	+24 V output (Max. 100 mA)
2	STO1	STO input 1
3	STO2	STO input 2
4	Feedback 1	STO1 feedback signal
5	Feedback 2	STO2 feedback signal

■ Communication plug connector

For DeviceNet®

Straight type
JXC-CD-S

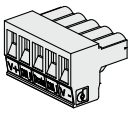

T-branch type
JXC-CD-T

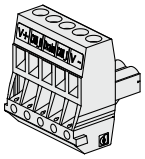

Communication plug connector for DeviceNet®

Terminal name	Details
V+	Power supply (+) for DeviceNet®
CAN_H	Communication wire (High)
Drain	Grounding wire/Shielded wire
CAN_L	Communication wire (Low)
V–	Power supply (–) for DeviceNet®

For IO-Link

Straight type
JXC-CL-S

∗ The communication plug connector for IO-Link is an accessory.

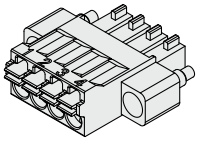

Communication plug connector for IO-Link

Terminal no.	Terminal name	Details
1	L+	+24 V
2	NC	N/A
3	L–	0 V
4	C/Q	IO-Link signal

For CC-Link

Straight type
LEC-CMJ-S



T-branch type
LEC-CMJ-T



Communication plug connector for CC-Link

Terminal name	Details
DA	CC-Link communication line A
DB	CC-Link communication line B
DG	CC-Link ground line
SLD	CC-Link shield
FG	Frame ground

JXC51/61/E1/91/P1/D1/L□/M1 Series
Precautions Relating to Differences in Controller Versions

As the controller version of the JXC series differs, the internal parameters are not compatible.

■ If using the JXC□1□-BC, please use the latest version of the JXC-BCW (parameter writing tool).

■ There are currently 3 versions available: version 1 products (V1.□ or S1.□), version 2 products (V2.□ or S2.□), and version 3 products (V3.□ or S3.□). Keep in mind that in order to write a backup file (.bkp) to another controller with the JXC-BCW, it needs to be the same version as the controller that created the file. (For example, a backup file created by a version 1 product can only be written to another version 1 product, and so on.)

Identifying Version Symbols



JXC□□ Series Version V3.□ or S3.□ Products

XR V3.0

Applicable models

JXC91□ Series

XR S3.0 T1.0

Applicable models

JXC51□ Series
JXC61□ Series
JXCE1□ Series
JXCP1□ Series
JXCD1□ Series
JXCL□□ Series
JXCM1□ Series

JXC□□ Series Version V2.□ or S2.□ Products

WP V2.1

Applicable models

JXC91□ Series

WP S2.2 T1.1

Applicable models

JXCE1□ Series
JXCP1□ Series
JXCD1□ Series
JXCL□□ Series

JXC□□ Series Version V1.□ or S1.□ Products

XR V1.0

Applicable models

JXC91□ Series

XR S1.0 T1.0

Applicable models

JXCE1□ Series
JXCP1□ Series
JXCD1□ Series
JXCL□□ Series

Blank Controller Versions and Applicable Battery-less Absolute Type Electric Actuator Sizes

■ The applicable battery-less absolute type electric actuator size range differs depending on the controller version. Be sure to confirm the controller version before using a blank controller.

Blank Controller Versions/Applicable Electric Actuator Sizes

<table>
<tr><th colspan="2">Blank controller</th><th colspan="10">Applicable electric actuator size</th></tr>
<tr><th>Series</th><th>Controller version</th><th>LEFS□E</th><th>LEFB□E</th><th>LEKFS□E</th><th>LEY□E</th><th>LEY□E-X8</th><th>LEYG□E</th><th>LES□E</th><th>LESH□E</th><th>LESYH□E</th><th>LER□E</th><th>LEHF□E</th></tr>
<tr><td rowspan="2">JXC91□ series
JXCD1□ series
JXCE1□ series
JXCP1□ series
JXCL□□ series</td><td>Version 3.4 (V3.4, S3.4)
Version 3.5 (V3.5, S3.5)</td><td>25, 32, 40</td><td>25, 32, 40</td><td rowspan="4">25, 32, 40</td><td>25, 32, 40</td><td rowspan="4">25, 32, 40</td><td>25, 32, 40</td><td rowspan="4">25</td><td rowspan="4">25</td><td>16, 25</td><td rowspan="4">50</td><td rowspan="4">32, 40</td></tr>
<tr><td>Version 3.6 (V3.6, S3.6) or higher</td><td>16, 25, 32, 40</td><td>16, 25, 32, 40</td><td>16, 25, 32, 40</td><td>16, 25, 32, 40</td><td>8, 16, 25</td></tr>
<tr><td rowspan="2">JXCM1□ series
JXC51/61 series</td><td>Version 3.4 (V3.4, S3.4)</td><td>25, 32, 40</td><td>25, 32, 40</td><td>25, 32, 40</td><td>25, 32, 40</td><td>16, 25</td></tr>
<tr><td>Version 3.5 (V3.5, S3.5) or higher</td><td>16, 25, 32, 40</td><td>16, 25, 32, 40</td><td>16, 25, 32, 40</td><td>16, 25, 32, 40</td><td>8, 16, 25</td></tr>
</table>

Compatible actuators

LEF LEY LES
LEP LER LEH

3-Axis Step Motor Controller (EtherNet/IP® Type)

JXC92 Series

CE UKCA RoHS

Click here for details.

How to Order

■ EtherNet/IP™ Type (JXC92)

Controller



JXC 9 2 7

- **EtherNet/IP™ type**
- **3-axis type**
- **Mounting**

Symbol	Mounting
7	Screw mounting
8	DIN rail

∗ Order the actuator separately, including the actuator cable.
(Example: LEFS16B-100B-S1)
∗ For the "Speed–Work Load" graph of the actuator, refer to the LECPA section on the model selection page of the actuator to be connected.

Specifications

For the setting of functions and operation methods, refer to the operation manual on the SMC website. (Documents/Download --> Instruction Manuals)

EtherNet/IP™ Type (JXC92)

Item		Specifications
Number of axes		Max. 3 axes
Compatible motor		Step motor (Servo/24 VDC)
Compatible encoder		Incremental
Power supply∗1		Control power supply Power voltage: 24 VDC ±10% Max. current consumption: 500 mA Motor power supply Power voltage: 24 VDC ±10% Max. current consumption: Based on the connected actuator∗2
Communication	**Protocol**	EtherNet/IP™∗3
	Communication speed	10 Mbps/100 Mbps (automatic negotiation)
	Communication method	Full duplex/Half duplex (automatic negotiation)
	Configuration file	EDS file
	Occupied area	Input 16 bytes/Output 16 bytes
	IP address setting range	Manual setting by switches: From 192.168.1.1 to 254, Via DHCP server: Arbitrary address
	Vendor ID	7 h (SMC Corporation)
	Product type	2 Bh (Generic Device)
	Product code	DEh
Serial communication		USB2.0 (Full Speed 12 Mbps)
Memory		Flash-ROM
LED indicator		PWR, RUN, USB, ALM, NS, MS, L/A, 100
Lock control		Forced-lock release terminal∗4
Cable length		Actuator cable: 20 m or less
Cooling system		Natural air cooling
Operating temperature range		0°C to 40°C (No freezing)
Operating humidity range		90% RH or less (No condensation)
Storage temperature range		–10°C to 60°C (No freezing)
Storage humidity range		90% RH or less (No condensation)
Insulation resistance		Between all external terminals and the case: 50 MΩ (500 VDC)
Weight		600 g (Screw mounting), 650 g (DIN rail mounting)

∗1 Do not use a power supply with inrush current protection for the motor drive power supply.
∗2 Power consumption depends on the actuator connected. Refer to the actuator specifications for further details.
∗3 EtherNet/IP™ is a trademark of ODVA.
∗4 Applicable to non-magnetizing locks

Dimensions

EtherNet/IP™ Type JXC92

Screw mounting

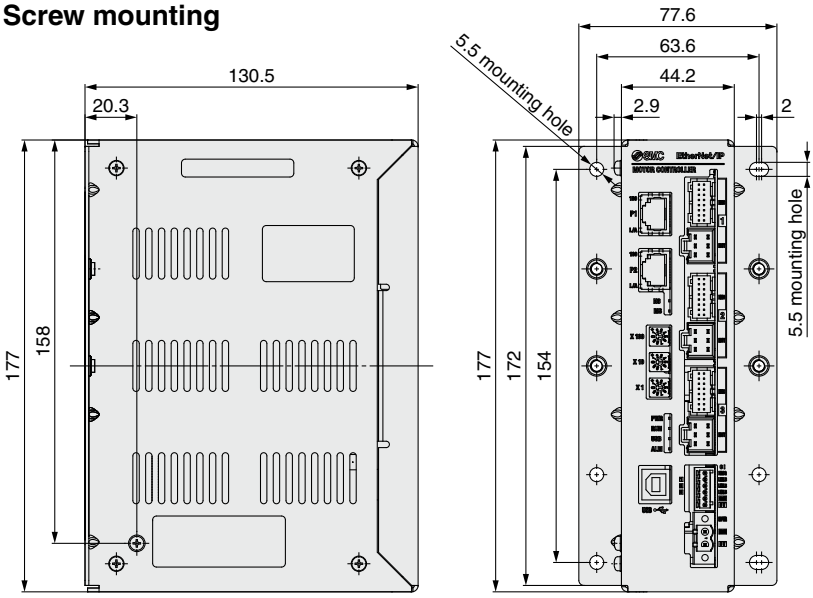

DIN rail mounting

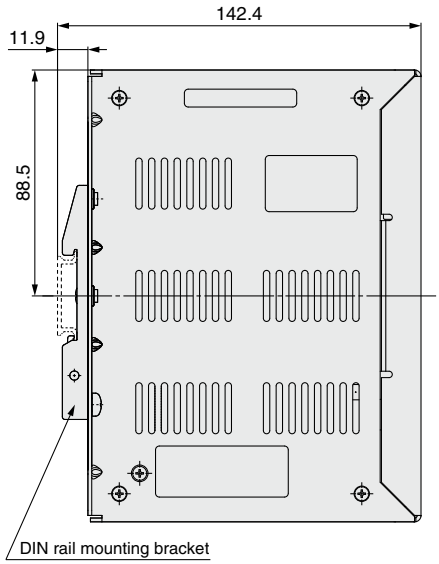

Controller Details

EtherNet/IP™ Type JXC92

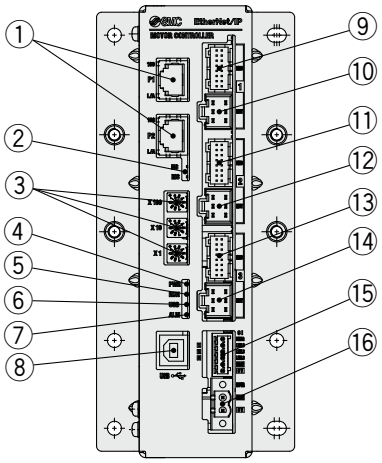

No.	Name	Description	Details
①	**P1, P2**	EtherNet/IP™ communication connector	Connect Ethernet cable.
②	**NS, MS**	Communication status LED	Displays the status of the EtherNet/IP™ communication
③	**X100** **X10** **X1**	IP address setting switches	Switch to set the 4th byte of the IP address by X1, X10 and X100.
④	**PWR**	Power supply LED (Green)	Power supply ON: Green turns on Power supply OFF: Green turns off
⑤	**RUN**	Operation LED (Green)	Running in EtherNet/IP™: Green turns on Running via USB communication: Green flashes Stopped: Green turns off
⑥	**USB**	USB connection LED (Green)	USB connected: Green turns on USB not connected: Green turns off
⑦	**ALM**	Alarm LED (Red)	With alarm: Red turns on Without alarm: Red turns off
⑧	**USB**	Serial communication connector	Connect to a PC via the USB cable.
⑨	**ENC** 1	Encoder connector (16 pins)	Axis 1: Connect the actuator cable.
⑩	**MOT** 1	Motor power connector (6 pins)	
⑪	**ENC** 2	Encoder connector (16 pins)	Axis 2: Connect the actuator cable.
⑫	**MOT** 2	Motor power connector (6 pins)	
⑬	**ENC** 3	Encoder connector (16 pins)	Axis 3: Connect the actuator cable.
⑭	**MOT** 3	Motor power connector (6 pins)	
⑮	**CI**	Control power supply connector∗1	Control power supply (+), All axes stop (+), Axis 1 lock release (+), Axis 2 lock release (+), Axis 3 lock release (+), Common (–)
⑯	**M PWR**	Motor power supply connector∗1	Motor power supply (+), Motor power supply (–)

∗1 Connectors are included. (Refer to page 753.)

Compatible actuators

LEF LEY LES

LEP LER*1 LEH

*1 Excludes the continuous rotation (360°) specification

4-Axis Step Motor Controller
(Parallel I/O/EtherNet/IP® Type)
JXC73/83/93 Series

Click here for details.

How to Order

■ Parallel I/O (JXC73/83)

Controller



JXC **7** **3** **2**

I/O type

Symbol	I/O type
7	NPN
8	PNP

4-axis type

I/O cable, mounting

Symbol	I/O cable	Mounting
1	1.5 m	Screw mounting
2	1.5 m	DIN rail
3	3 m	Screw mounting
4	3 m	DIN rail
5	5 m	Screw mounting
6	5 m	DIN rail
7	None	Screw mounting
8	None	DIN rail

∗ Two I/O cables are included.

■ EtherNet/IP™ Type (JXC93)

Controller



JXC **9** **3** **7**

EtherNet/IP™ type

4-axis type

Mounting

Symbol	Mounting
7	Screw mounting
8	DIN rail

∗ Order the actuator separately, including the actuator cable.
(Example: LEFS16B-100B-S1)

∗ For the “Speed–Work Load” graph of the actuator, refer to the LECPA section on the model selection page of the actuator to be connected.

Specifications

For the setting of functions and operation methods, refer to the operation manual on the SMC website. (Documents/Download --> Instruction Manuals)

Parallel I/O (JXC73/83)

Item	Specifications
Number of axes	Max. 4 axes
Compatible motor	Step motor (Servo/24 VDC)
Compatible encoder	Incremental A/B phase (Encoder resolution: 800 pulse/rotation)
Power supply∗1	Main control power supply Power voltage: 24 VDC ±10% Max. current consumption: 300 mA Motor power supply, Motor control power supply (Common) Power voltage: 24 VDC ±10% Max. current consumption: Based on the connected actuator∗2
Parallel input	16 inputs (Photo-coupler isolation)
Parallel output	32 outputs (Photo-coupler isolation)
Serial communication	USB2.0 (Full Speed 12 Mbps)
Memory	Flash-ROM/EEPROM
LED indicator	PWR, RUN, USB, ALM
Lock control	Forced-lock release terminal∗3
Cable length	I/O cable: 5 m or less, Actuator cable: 20 m or less
Cooling system	Natural air cooling
Operating temperature range	0°C to 40°C (No freezing)
Operating humidity range	90% RH or less (No condensation)
Storage temperature range	–10°C to 60°C (No freezing)
Storage humidity range	90% RH or less (No condensation)
Insulation resistance	Between all external terminals and the case: 50 MΩ (500 VDC)
Weight	1050 g (Screw mounting), 1100 g (DIN rail mounting)

∗1 Do not use a power supply with inrush current protection for the motor drive power and motor control power supply.
∗2 Power consumption depends on the actuator connected. Refer to the actuator specifications for further details.
∗3 Applicable to non-magnetizing locks

For the setting of functions and operation methods, refer to the operation manual on the SMC website. (Documents/Download --> Instruction Manuals)

EtherNet/IP™ Type (JXC93)

Item		Specifications
Number of axes		Max. 4 axes
Compatible motor		Step motor (Servo/24 VDC)
Compatible encoder		Incremental A/B phase (Encoder resolution: 800 pulse/rotation)
Power supply∗1		Main control power supply Power voltage: 24 VDC ±10% Max. current consumption: 350 mA Motor power supply, Motor control power supply (Common) Power voltage: 24 VDC ±10% Max. current consumption: Based on the connected actuator∗2
Communication	**Protocol**	EtherNet/IP™∗4
	Communication speed	10 Mbps/100 Mbps (automatic negotiation)
	Communication method	Full duplex/Half duplex (automatic negotiation)
	Configuration file	EDS file
	Occupied area	Input 16 bytes/Output 16 bytes
	IP address setting range	Manual setting by switches: From 192.168.1.1 to 254, Via DHCP server: Arbitrary address
	Vendor ID	7 h (SMC Corporation)
	Product type	2 Bh (Generic Device)
	Product code	DCh
Serial communication		USB2.0 (Full Speed 12 Mbps)
Memory		Flash-ROM/EEPROM
LED indicator		PWR, RUN, USB, ALM, NS, MS, L/A, 100
Lock control		Forced-lock release terminal∗3
Cable length		Actuator cable: 20 m or less
Cooling system		Natural air cooling
Operating temperature range		0°C to 40°C (No freezing)
Operating humidity range		90% RH or less (No condensation)
Storage temperature range		–10°C to 60°C (No freezing)
Storage humidity range		90% RH or less (No condensation)
Insulation resistance		Between all external terminals and the case: 50 MΩ (500 VDC)
Weight		1050 g (Screw mounting), 1100 g (DIN rail mounting)

∗1 Do not use a power supply with inrush current protection for the motor drive power and motor control power supply.
∗2 Power consumption depends on the actuator connected. Refer to the actuator specifications for further details.
∗3 Applicable to non-magnetizing locks
∗4 EtherNet/IP™ is a trademark of ODVA.

Dimensions

Parallel I/O JXC73/83

Screw mounting

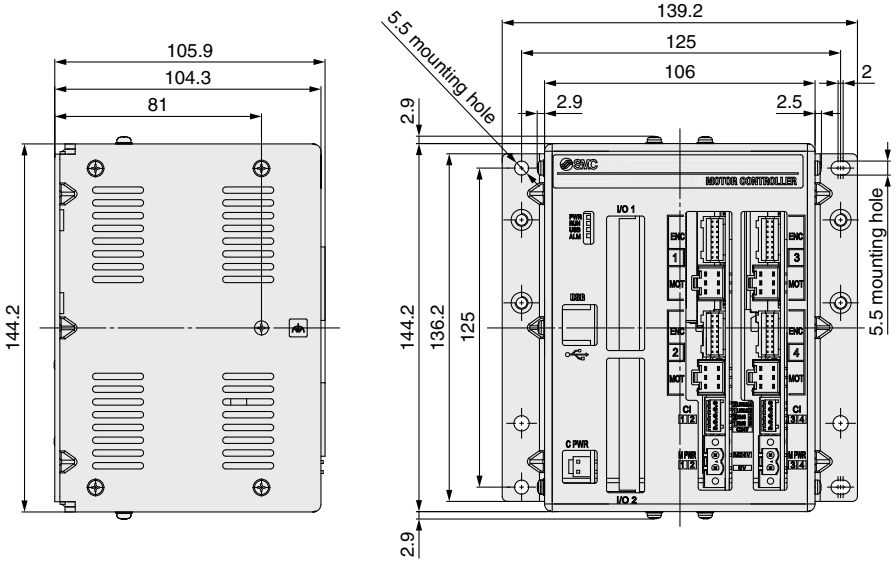

DIN rail mounting

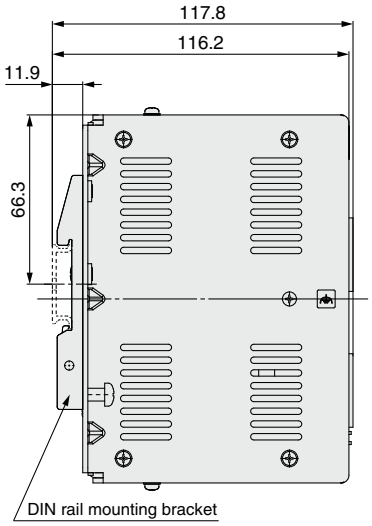

EtherNet/IP™ Type JXC93

Screw mounting

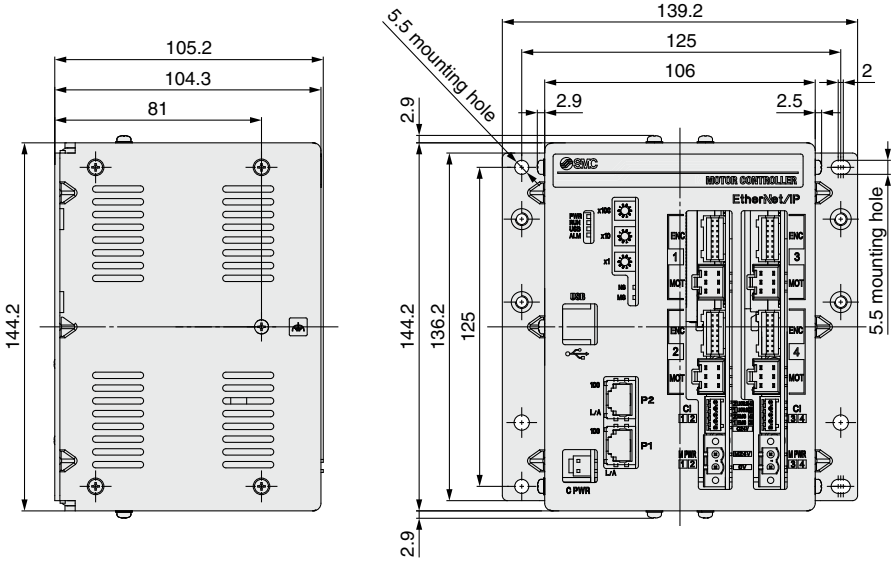

DIN rail mounting

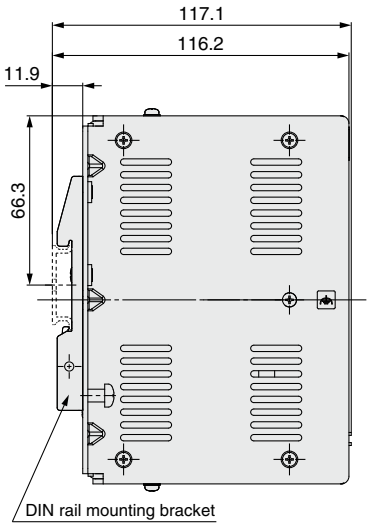

Controller Details

Parallel I/O JXC73/83

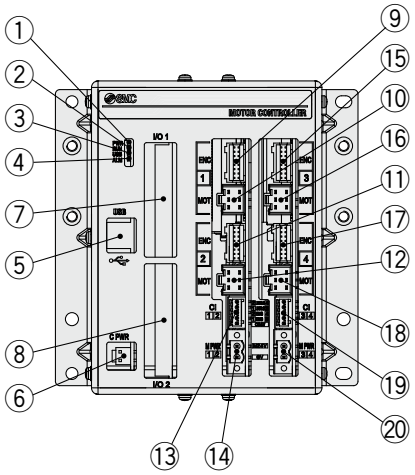

No.	Name	Description	Details
①	**PWR**	Power supply LED (Green)	Power supply ON: Green turns on Power supply OFF: Green turns off
②	**RUN**	Operation LED (Green)	Running in parallel I/O: Green turns on Running via USB communication: Green flashes Stopped: Green turns off
③	**USB**	USB connection LED (Green)	USB connected: Green turns on USB not connected: Green turns off
④	**ALM**	Alarm LED (Red)	With alarm: Red turns on Without alarm: Red turns off
⑤	**USB**	Serial communication	Connect to a PC via the USB cable.
⑥	**C PWR**	Main control power supply connector (2 pins)*1	Main control power supply (+) (–)
⑦	**I/O 1**	Parallel I/O connector (40 pins)	Connect to a PLC via the I/O cable.
⑧	**I/O 2**	Parallel I/O connector (40 pins)	Connect to a PLC via the I/O cable.
⑨	**ENC** 1	Encoder connector (16 pins)	Axis 1: Connect the actuator cable.
⑩	**MOT** 1	Motor power connector (6 pins)	
⑪	**ENC** 2	Encoder connector (16 pins)	Axis 2: Connect the actuator cable.
⑫	**MOT** 2	Motor power connector (6 pins)	
⑬	**CI** 1 2	Motor control power supply connector*1	Motor control power supply (+), Axis 1 stop (+), Axis 1 lock release (+), Axis 2 stop (+), Axis 2 lock release (+)
⑭	**M PWR** 1 2	Motor power supply connector*1	For Axis 1, 2. Motor power supply (+), Common (–)
⑮	**ENC** 3	Encoder connector (16 pins)	Axis 3: Connect the actuator cable.
⑯	**MOT** 3	Motor power connector (6 pins)	
⑰	**ENC** 4	Encoder connector (16 pins)	Axis 4: Connect the actuator cable.
⑱	**MOT** 4	Motor power connector (6 pins)	
⑲	**CI** 3 4	Motor control power supply connector*1	Motor control power supply (+), Axis 3 stop (+), Axis 3 lock release (+), Axis 4 stop (+), Axis 4 lock release (+)
⑳	**M PWR** 3 4	Motor power supply connector*1	For Axis 3, 4. Motor power supply (+), Common (–)

*1 Connectors are included. (Refer to page 753.)

EtherNet/IP™ Type JXC93

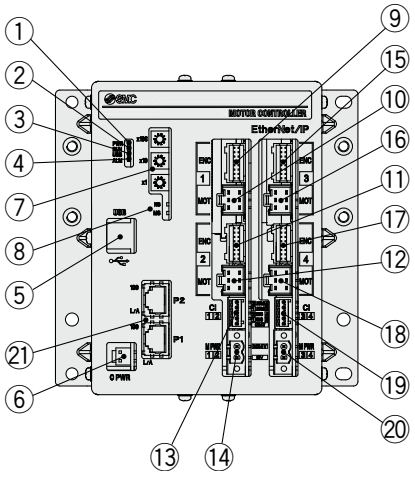

No.	Name	Description	Details
①	**PWR**	Power supply LED (Green)	Power supply ON: Green turns on Power supply OFF: Green turns off
②	**RUN**	Operation LED (Green)	Running in EtherNet/IP™: Green turns on Running via USB communication: Green flashes Stopped: Green turns off
③	**USB**	USB connection LED (Green)	USB connected: Green turns on USB not connected: Green turns off
④	**ALM**	Alarm LED (Red)	With alarm: Red turns on Without alarm: Red turns off
⑤	**USB**	Serial communication	Connect to a PC via the USB cable.
⑥	**C PWR**	Main control power supply connector (2 pins)*1	Main control power supply (+) (–)
⑦	**x100** **x10** **x1**	IP address setting switches	Switch to set the 4th byte of the IP address by X1, X10 and X100.
⑧	**MS, NS**	Communication status LED	Displays the status of the EtherNet/IP™ communication
⑨	**ENC** 1	Encoder connector (16 pins)	Axis 1: Connect the actuator cable.
⑩	**MOT** 1	Motor power connector (6 pins)	
⑪	**ENC** 2	Encoder connector (16 pins)	Axis 2: Connect the actuator cable.
⑫	**MOT** 2	Motor power connector (6 pins)	
⑬	**CI** 1 2	Motor control power supply connector*1	Motor control power supply (+), Axis 1 stop (+), Axis 1 lock release (+), Axis 2 stop (+), Axis 2 lock release (+)
⑭	**M PWR** 1 2	Motor power supply connector*1	For Axis 1, 2. Motor power supply (+), Common (–)
⑮	**ENC** 3	Encoder connector (16 pins)	Axis 3: Connect the actuator cable.
⑯	**MOT** 3	Motor power connector (6 pins)	
⑰	**ENC** 4	Encoder connector (16 pins)	Axis 4: Connect the actuator cable.
⑱	**MOT** 4	Motor power connector (6 pins)	
⑲	**CI** 3 4	Motor control power supply connector*1	Motor control power supply (+), Axis 3 stop (+), Axis 3 lock release (+), Axis 4 stop (+), Axis 4 lock release (+)
⑳	**M PWR** 3 4	Motor power supply connector*1	For Axis 3, 4. Motor power supply (+), Common (–)
㉑	**P1, P2**	EtherNet/IP™ communication connector	Connect Ethernet cable.

*1 Connectors are included. (Refer to page 753.)

Wiring Example 1

Cable with Main Control Power Supply Connector (For 4 Axes)*1: C PWR 1 pc.

For 4 Axes: JXC73/83/93

Terminal name	Function	Details
+24V	Main control power supply (+)	Power supply (+) supplied to the main control
24–0V	Main control power supply (–)	Power supply (–) supplied to the main control

*1 Part no.: JXC-C1 (Cable length: 1.5 m)

Cable with main control power supply connector

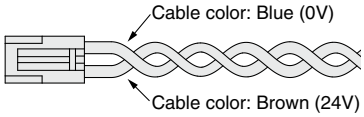

Motor Power Supply Connector (For 3/4 Axes)*2: M PWR 2 pcs.*3

For 3 Axes: JXC92 / For 4 Axes: JXC73/83/93

Terminal name	Function	Details	Note
0V	Motor power supply (–)	Power supply (–) supplied to the motor power	For 3 axes JXC92
		The M 24V terminal, C 24V terminal, EMG terminal, and LKRLS terminal are common (–).	For 4 axes JXC73/83/93
M 24V	Motor power supply (+)	Power supply (+) supplied to the motor power	

*2 Manufactured by PHOENIX CONTACT (Part no.: MSTB2, 5/2-STF-5, 08)
*3 1 pc. for 3 axes (JXC92)

Motor power supply connector

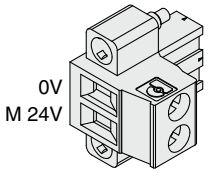

Motor Control Power Supply Connector (For 4 Axes)*4: CI 2 pcs.

For 4 Axes: JXC73/83/93

Terminal name	Function	Details
C 24V	Motor control power supply (+)	Power supply (+) supplied to the motor control
EMG1/EMG3	Stop (+)	Axis 1/Axis 3: Input (+) for releasing the stop
EMG2/EMG4	Stop (+)	Axis 2/Axis 4: Input (+) for releasing the stop
LKRLS1/LKRLS3	Lock release (+)	Axis 1/Axis 3: Input (+) for releasing the lock
LKRLS2/LKRLS4	Lock release (+)	Axis 2/Axis 4: Input (+) for releasing the lock

*4 Manufactured by PHOENIX CONTACT (Part no.: FK-MC0, 5/5-ST-2, 5)

Motor control power supply connector

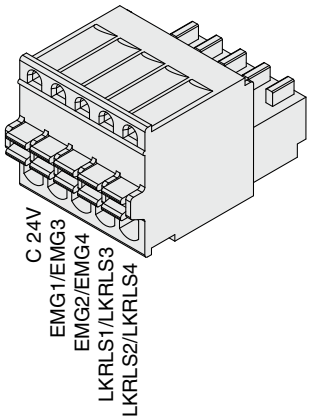

Control Power Supply Connector (For 3 Axes)*5: CI 1 pc.

For 3 Axes: JXC92

Terminal name	Function	Details
0V	Control power supply (–)	The C 24V terminal, LKRLS terminal, and EMG terminal are common (–).
C 24V	Control power supply (+)	Power supply (+) supplied to the control
LKRLS3	Lock release (+)	Axis 3: Input (+) for releasing the lock
LKRLS2	Lock release (+)	Axis 2: Input (+) for releasing the lock
LKRLS1	Lock release (+)	Axis 1: Input (+) for releasing the lock
EMG	Stop (+)	All axes: Input (+) for releasing the stop

*5 Manufactured by PHOENIX CONTACT (Part no.: FK-MC0, 5/6-ST-2, 5)

Control power supply connector

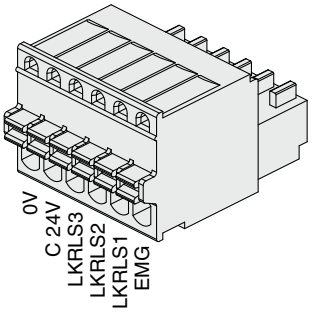

Wiring Example 2

Parallel I/O Connector

* When you connect a PLC to the I/O 1 or I/O 2 parallel I/O connector, use the I/O cable (JXC-C2-□).
* The wiring changes depending on the type of parallel I/O (NPN or PNP).

I/O 1 Wiring example

NPN JXC73

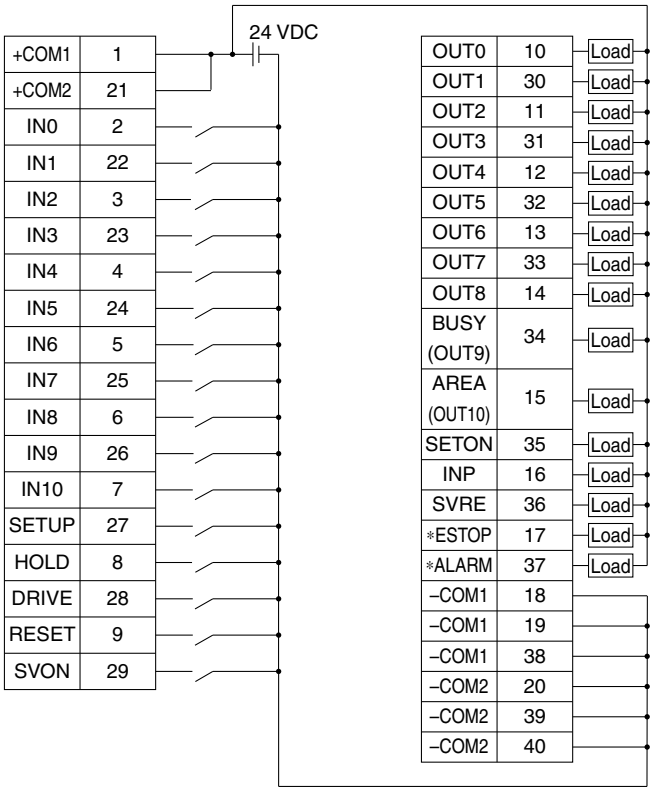

PNP JXC83

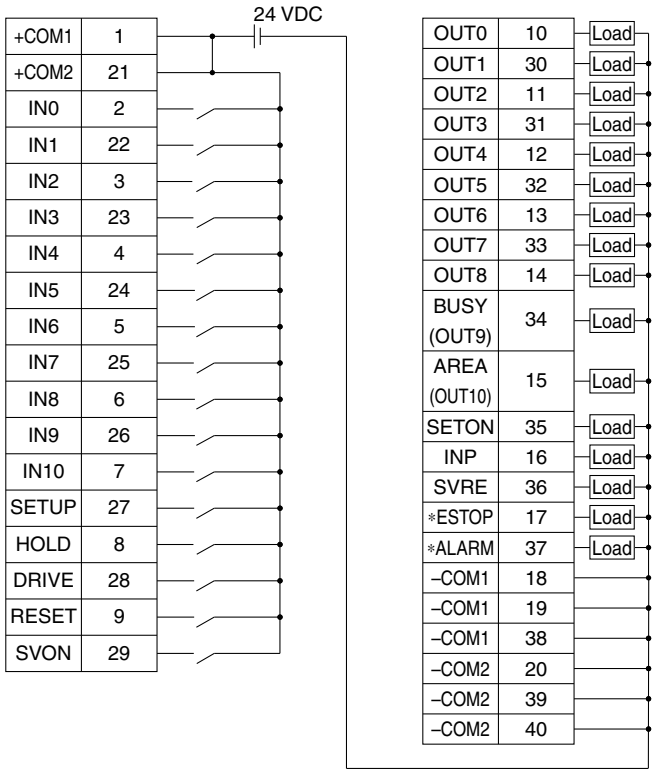

I/O 1 Input Signal

Name	Details
+COM1 +COM2	Connects the power supply 24 V for input/output signal
IN0 to IN8	Step data specified bit no. (Standard: When 512 points are used)
IN9 IN10	Step data specified extension bit no. (Extension: When 2048 points are used)
SETUP	Instruction to return to origin
HOLD	Temporarily stops operation
DRIVE	Instruction to drive
RESET	Resets alarm and interrupts operation
SVON	Servo ON instruction

I/O 1 Output Signal

Name	Details
OUT0 to OUT8	Outputs the step data no. during operation
BUSY (OUT9)	Outputs when the operation of the actuator is in progress
AREA (OUT10)	Outputs when all actuators are within the area output range
SETON	Outputs when the return to origin of all actuators is completed
INP	Outputs when the positioning or pushing of all actuators is completed
SVRE	Outputs when servo is ON
∗ESTOP∗1	OFF when EMG stop is instructed
∗ALARM∗1	OFF when alarm is generated
–COM1 –COM2	Connects the power supply 0 V for input/output signal

∗1 Negative-logic circuit signal

Wiring Example 2

Parallel I/O Connector

* When you connect a PLC to the I/O 1 or I/O 2 parallel I/O connector, use the I/O cable (JXC-C2-□).
* The wiring changes depending on the type of parallel I/O (NPN or PNP).

I/O 2 Wiring example

NPN JXC73

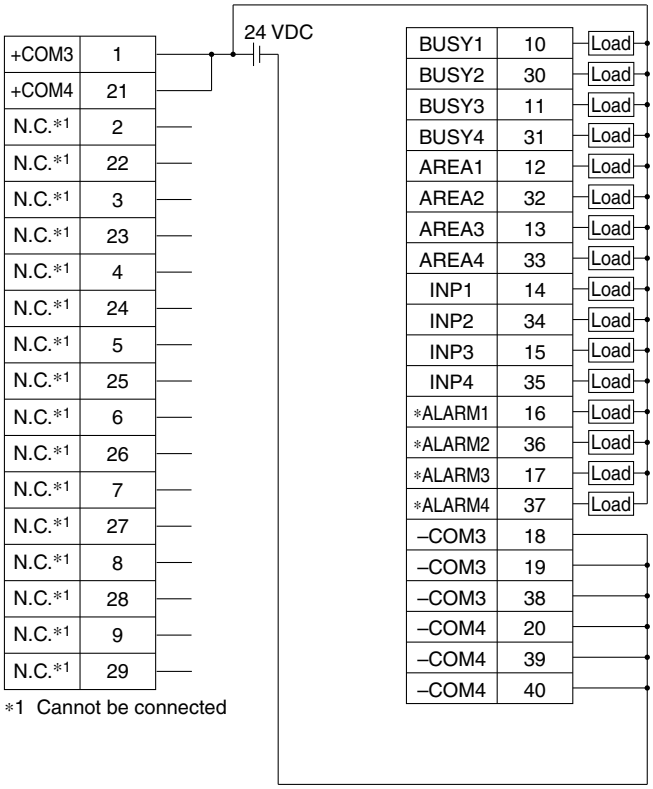

*1 Cannot be connected

PNP JXC83

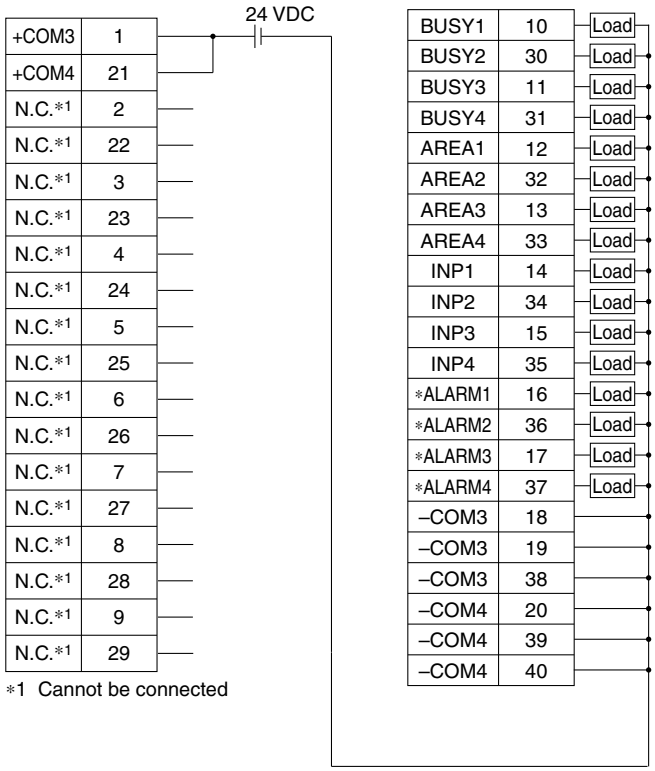

*1 Cannot be connected

I/O 2 Input Signal

Name	Details
+COM3 +COM4	Connects the power supply 24 V for input/output signal
N.C.	Cannot be connected

I/O 2 Output Signal

Name	Details
BUSY1	Busy signal for axis 1
BUSY2	Busy signal for axis 2
BUSY3	Busy signal for axis 3
BUSY4	Busy signal for axis 4
AREA1	Area signal for axis 1
AREA2	Area signal for axis 2
AREA3	Area signal for axis 3
AREA4	Area signal for axis 4
INP1	Positioning or pushing completion signal for axis 1
INP2	Positioning or pushing completion signal for axis 2
INP3	Positioning or pushing completion signal for axis 3
INP4	Positioning or pushing completion signal for axis 4
*ALARM1*2	Alarm signal for axis 1
*ALARM2*2	Alarm signal for axis 2
*ALARM3*2	Alarm signal for axis 3
*ALARM4*2	Alarm signal for axis 4
–COM3 –COM4	Connects the power supply 0 V for input/output signal

*2 Negative-logic circuit signal

Options

Cable with main control power supply connector

For 4 Axes
JXC73/83/93

JXC − C1

Cable length: 1.5 m (Accessory)

Number of cores	2
AWG size	AWG20

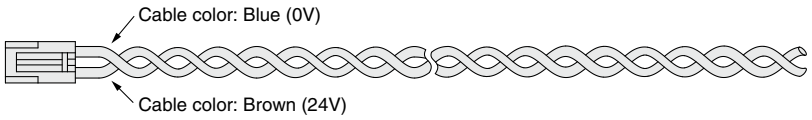

I/O cable (1 pc.)

For 4 Axes
JXC73/83

JXC − C2 − □

Cable length (L) [m]

1	1.5
3	3
5	5

Number of cores	40
AWG size	AWG28

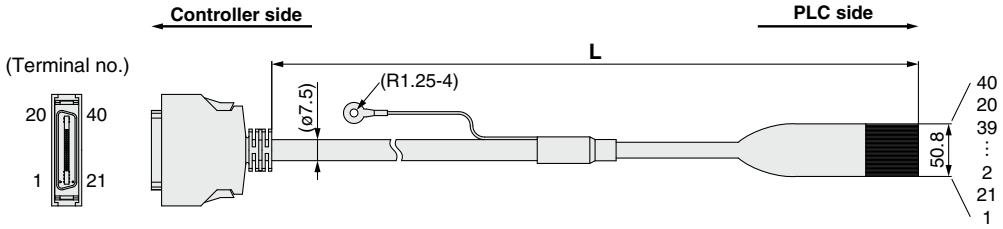

Pin no.	Wire color	Pin no.	Wire color	Pin no.	Wire color	Pin no.	Wire color
1	Orange (Black 1)	6	Orange (Black 2)	11	Orange (Black 3)	16	Orange (Black 4)
21	Orange (Red 1)	26	Orange (Red 2)	31	Orange (Red 3)	36	Orange (Red 4)
2	Gray (Black 1)	7	Gray (Black 2)	12	Gray (Black 3)	17	Gray (Black 4)
22	Gray (Red 1)	27	Gray (Red 2)	32	Gray (Red 3)	37	Gray (Red 4)
3	White (Black 1)	8	White (Black 2)	13	White (Black 3)	18	White (Black 4)
23	White (Red 1)	28	White (Red 2)	33	White (Red 3)	38	White (Red 4)
4	Yellow (Black 1)	9	Yellow (Black 2)	14	Yellow (Black 3)	19	Yellow (Black 4)
24	Yellow (Red 1)	29	Yellow (Red 2)	34	Yellow (Red 3)	39	Yellow (Red 4)
5	Pink (Black 1)	10	Pink (Black 2)	15	Pink (Black 3)	20	Pink (Black 4)
25	Pink (Red 1)	30	Pink (Red 2)	35	Pink (Red 3)	40	Pink (Red 4)

Weight

Product no.	Weight [g]
JXC-C2-1	160
JXC-C2-3	300
JXC-C2-5	480

DIN rail

For 3 Axes
JXC92
For 4 Axes
JXC73/83/93

AXT100 − DR − □

∗ For □, enter a number from the No. line in the table below. Refer to the dimension drawings on pages 748 and 751 for the mounting dimensions.

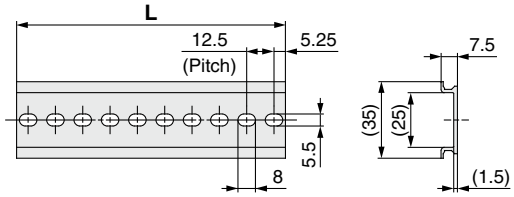

L Dimensions

No.	1	2	3	4	5	6	7	8	9	10	11	12	13	14	15	16	17	18	19	20
L	23	35.5	48	60.5	73	85.5	98	110.5	123	135.5	148	160.5	173	185.5	198	210.5	223	235.5	248	260.5

No.	21	22	23	24	25	26	27	28	29	30	31	32	33	34	35	36	37	38	39	40
L	273	285.5	298	310.5	323	335.5	348	360.5	373	385.5	398	410.5	423	435.5	448	460.5	473	485.5	498	510.5

DIN rail mounting bracket (with 6 mounting screws)

For 3 Axes
JXC92
For 4 Axes
JXC73/83/93

JXC − Z1

This should be used when the DIN rail mounting bracket is mounted onto a screw mounting type controller afterward.

Options

Controller setting kit

For 4 Axes
JXC73/83/93

JXC – W1

Controller setting kit
(Japanese and English are available.)

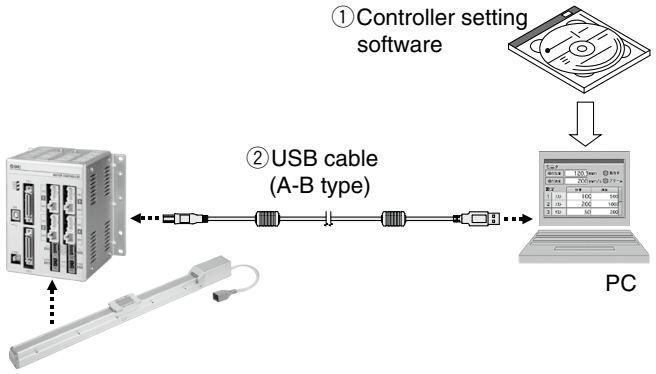

Contents

①Controller setting software (CD-ROM)
②USB cable (Cable length: 3 m)

Description		Model
①	Controller setting software	JXC-W1-1
②	USB cable	JXC-W1-2 (The same cable as the JXC-MA1-2)

∗ Can be ordered separately

Hardware Requirements

PC/AT compatible machine with Windows 7 or Windows 8.1 and USB1.1 or USB2.0 port

∗ Windows® is a registered trademark of Microsoft Corporation in the United States.

Controller setting kit

For 3 Axes
JXC92

JXC – MA1∗1

Controller setting kit
(Japanese and English are available.)

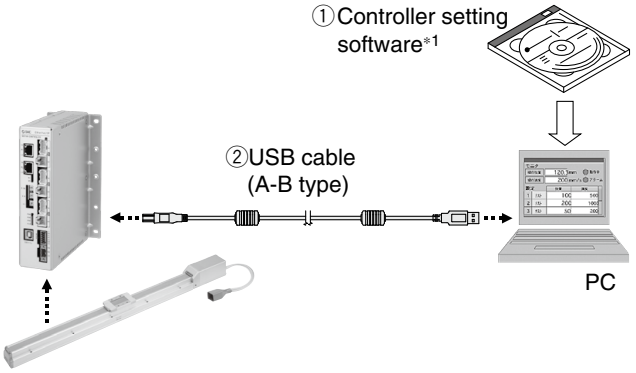

Contents

①Controller setting software (CD-ROM)∗1
②USB cable (Cable length: 3 m)

Description		Model
①	Controller setting software	JXC-MA1-1
②	USB cable	JXC-MA1-2 (The same cable as the JXC-W1-2)

∗ Can be ordered separately

Hardware Requirements

PC/AT compatible machine with Windows 7 or Windows 8.1 and USB1.1 or USB2.0 port

∗1 The controller setting software also includes software dedicated for 4 axes.
∗ Windows® is a registered trademark of Microsoft Corporation in the United States.

Actuator Cable 1

[Robotic cable, standard cable for step motor (Servo/24 VDC)]

LE – CP – 1 – □

Cable length (L) [m]

1	1.5
3	3
5	5
8	8*1
A	10*1
B	15*1
C	20*1

*1 Produced upon receipt of order (Robotic cable only)

Cable type

Nil	Robotic cable (Flexible cable)
S	Standard cable

LE-CP-1/3/5/Cable length: 1.5 m, 3 m, 5 m

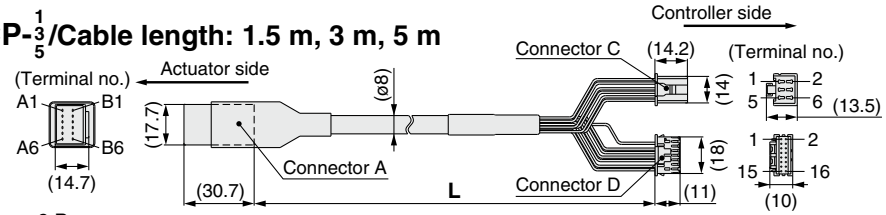

LE-CP-8/A/B/C/Cable length: 8 m, 10 m, 15 m, 20 m (*1 Produced upon receipt of order)

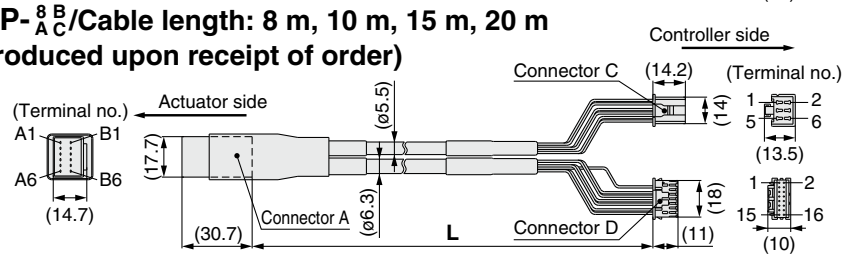

Weight

Product no.	Weight [g]	Note
LE-CP-1-S	190	Standard cable
LE-CP-3-S	280	
LE-CP-5-S	460	
LE-CP-1	140	Robotic cable
LE-CP-3	260	
LE-CP-5	420	
LE-CP-8	790	
LE-CP-A	980	
LE-CP-B	1460	
LE-CP-C	1940	

Signal	Connector A terminal no.	Cable color	Connector C terminal no.
A	B-1	Brown	2
$\overline{A}$	A-1	Red	1
B	B-2	Orange	6
$\overline{B}$	A-2	Yellow	5
COM-A/COM	B-3	Green	3
COM-B/—	A-3	Blue	4
Shield			
Vcc	B-4	Brown	12
GND	A-4	Black	13
$\overline{A}$	B-5	Red	7
A	A-5	Black	6
$\overline{B}$	B-6	Orange	9
B	A-6	Black	8
		—	3

Cable color	Connector D terminal no.
Brown	12
Black	13
Red	7
Black	6
Orange	9
Black	8
—	3

[Robotic cable, standard cable with lock and sensor for step motor (Servo/24 VDC)]

LE – CP – 1 – B – □

Cable length (L) [m]

1	1.5
3	3
5	5
8	8*1
A	10*1
B	15*1
C	20*1

*1 Produced upon receipt of order (Robotic cable only)

With lock and sensor

Cable type

Nil	Robotic cable (Flexible cable)
S	Standard cable

LE-CP-1/3/5/Cable length: 1.5 m, 3 m, 5 m

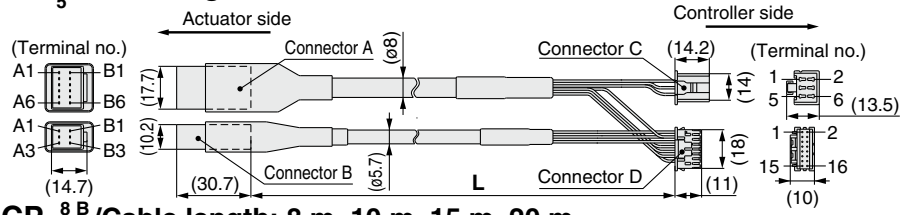

LE-CP-8/A/B/C/Cable length: 8 m, 10 m, 15 m, 20 m (*1 Produced upon receipt of order)

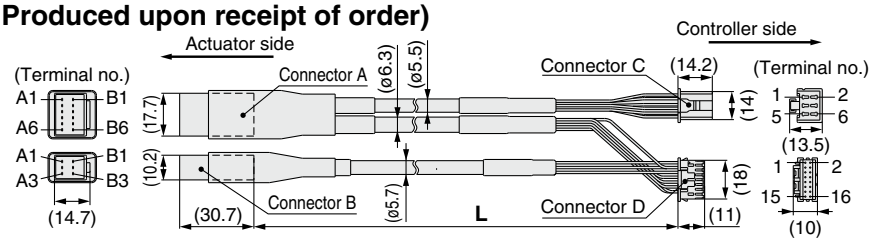

Weight

Product no.	Weight [g]	Note
LE-CP-1-B-S	240	Standard cable
LE-CP-3-B-S	380	
LE-CP-5-B-S	630	
LE-CP-1-B	190	Robotic cable
LE-CP-3-B	360	
LE-CP-5-B	590	
LE-CP-8-B	1060	
LE-CP-A-B	1320	
LE-CP-B-B	1920	
LE-CP-C-B	2620	

Signal	Connector A terminal no.	Cable color	Connector C terminal no.
A	B-1	Brown	2
$\overline{A}$	A-1	Red	1
B	B-2	Orange	6
$\overline{B}$	A-2	Yellow	5
COM-A/COM	B-3	Green	3
COM-B/—	A-3	Blue	4
Shield			
Vcc	B-4	Brown	12
GND	A-4	Black	13
$\overline{A}$	B-5	Red	7
A	A-5	Black	6
$\overline{B}$	B-6	Orange	9
B	A-6	Black	8
		—	3

Cable color	Connector D terminal no.
Brown	12
Black	13
Red	7
Black	6
Orange	9
Black	8
—	3

Signal	Connector B terminal no.	Cable color	Connector C terminal no.
Lock (+)	B-1	Red	4
Lock (–)	A-1	Black	5
Sensor (+)	B-3	Brown	1
Sensor (–)	A-3	Blue	2

Compatible controller

LECA6

Actuator Cable 2

[Robotic cable for servo motor (24 VDC)]

LE − CA − 1

Cable length (L) [m]

1	1.5
3	3
5	5
8	8*1
A	10*1
B	15*1
C	20*1

*1 Produced upon receipt of order

Weight

Product no.	Weight [g]
LE-CA-1	220
LE-CA-3	420
LE-CA-5	700
LE-CA-8	1100
LE-CA-A	1370
LE-CA-B	2050
LE-CA-C	2720

LE-CA-□

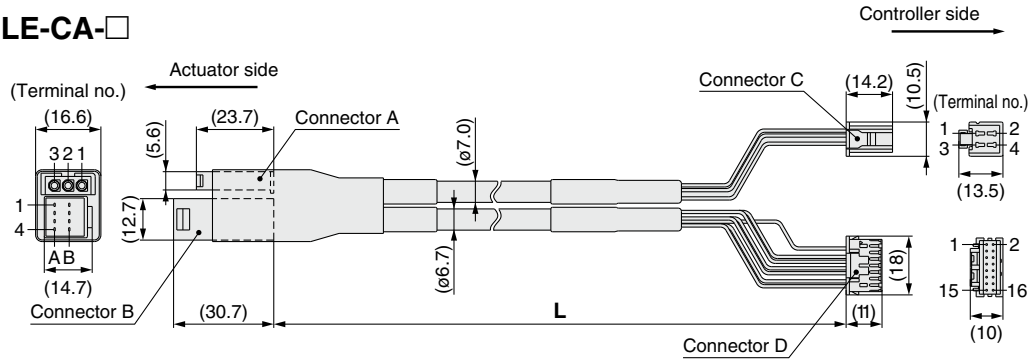

Signal	Connector A terminal no.	Cable color	Connector C terminal no.
U	1	Red	1
V	2	White	2
W	3	Black	3

Signal	Connector B terminal no.	Cable color	Connector D terminal no.
Vcc	B-1	Brown	12
GND	A-1	Black	13
$\overline{A}$	B-2	Red	7
A	A-2	Black	6
$\overline{B}$	B-3	Orange	9
B	A-3	Black	8
$\overline{Z}$	B-4	Yellow	11
Z	A-4	Black	10
		—	3

Shield

Connection of shield material

[Robotic cable with lock and sensor for servo motor (24 VDC)]

LE − CA − 1 − B

Cable length (L) [m]

1	1.5
3	3
5	5
8	8*1
A	10*1
B	15*1
C	20*1

*1 Produced upon receipt of order

With lock and sensor

Weight

Product no.	Weight [g]
LE-CA-1-B	270
LE-CA-3-B	520
LE-CA-5-B	870
LE-CA-8-B	1370
LE-CA-A-B	1710
LE-CA-B-B	2560
LE-CA-C-B	3400

LE-CA-□-B

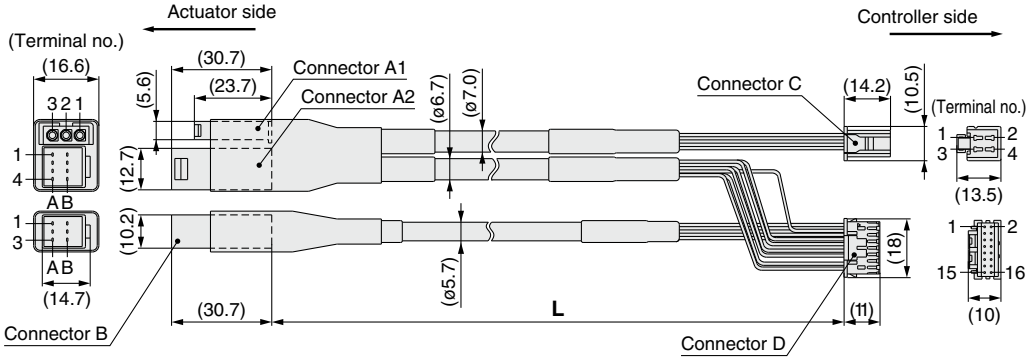

Signal	Connector A1 terminal no.	Cable color	Connector C terminal no.
U	1	Red	1
V	2	White	2
W	3	Black	3

Signal	Connector A2 terminal no.	Cable color	Connector D terminal no.
Vcc	B-1	Brown	12
GND	A-1	Black	13
$\overline{A}$	B-2	Red	7
A	A-2	Black	6
$\overline{B}$	B-3	Orange	9
B	A-3	Black	8
$\overline{Z}$	B-4	Yellow	11
Z	A-4	Black	10
		—	3

Shield

Connection of shield material

Signal	Connector B terminal no.		
Lock (+)	B-1	Red	4
Lock (–)	A-1	Black	5
Sensor (+)	B-3	Brown	1
Sensor (–)	A-3	Black	2

Options: Actuator Cable

[Robotic cable for battery-less absolute (Step motor 24 VDC)]

LE−CE−1

Cable length (L) [m]

1	1.5
3	3
5	5
8	8*1
A	10*1
B	15*1
C	20*1

*1 Produced upon receipt of order

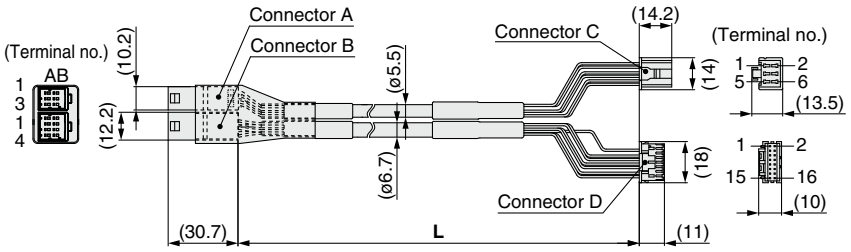

Weight

Product no.	Weight [g]	Note
LE-CE-1	190	Robotic cable
LE-CE-3	360	
LE-CE-5	570	
LE-CE-8	900	
LE-CE-A	1120	
LE-CE-B	1680	
LE-CE-C	2210	

Signal	Connector A terminal no.	Cable color	Connector C terminal no.
A	B-1	Brown	2
$\overline{A}$	A-1	Red	1
B	B-2	Orange	6
$\overline{B}$	A-2	Yellow	5
COM-A/COM	B-3	Green	3
COM-B/—	A-3	Blue	4

Signal	Connector B terminal no.	Cable color	Connector D terminal no.
Vcc	B-1	Brown	12
GND	A-1	Black	13
$\overline{A}$	B-2	Red	7
A	A-2	Black	6
$\overline{B}$	B-3	Orange	9
B	A-3	Black	8
SD+ (RX)	B-4	Yellow	11
SD− (TX)	A-4	Black	10
		Black	3

Shield

[Robotic cable with lock for battery-less absolute (Step motor 24 VDC)]

LE−CE−1−B

Cable length (L) [m]

1	1.5
3	3
5	5
8	8*1
A	10*1
B	15*1
C	20*1

*1 Produced upon receipt of order

With lock and sensor

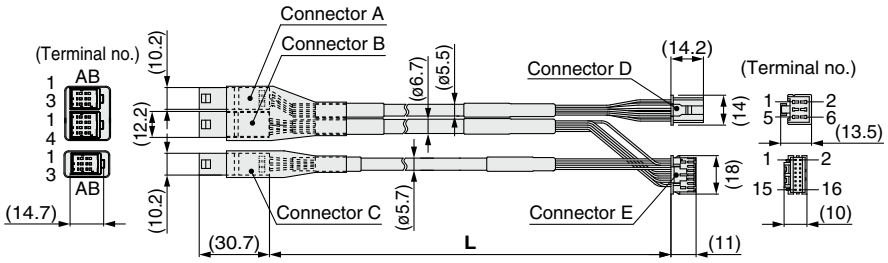

Weight

Product no.	Weight [g]	Note
LE-CE-1-B	240	Robotic cable
LE-CE-3-B	460	
LE-CE-5-B	740	
LE-CE-8-B	1170	
LE-CE-A-B	1460	
LE-CE-B-B	2120	
LE-CE-C-B	2890	

Signal	Connector A terminal no.	Cable color	Connector D terminal no.
A	B-1	Brown	2
$\overline{A}$	A-1	Red	1
B	B-2	Orange	6
$\overline{B}$	A-2	Yellow	5
COM-A/COM	B-3	Green	3
COM-B/—	A-3	Blue	4

Signal	Connector B terminal no.	Cable color	Connector E terminal no.
Vcc	B-1	Brown	12
GND	A-1	Black	13
$\overline{A}$	B-2	Red	7
A	A-2	Black	6
$\overline{B}$	B-3	Orange	9
B	A-3	Black	8
SD+ (RX)	B-4	Yellow	11
SD− (TX)	A-4	Black	10
		Black	3

Shield

Signal	Connector C terminal no.		
Lock (+)	B-1	Red	4
Lock (−)	A-1	Black	5
Sensor (+)	B-3	Brown	1
Sensor (−)	A-3	Blue	2

Compatible controllers

JXC□1 LECA6 LECPA

LEC-W2A-□
Communication Cable for Controller Setting

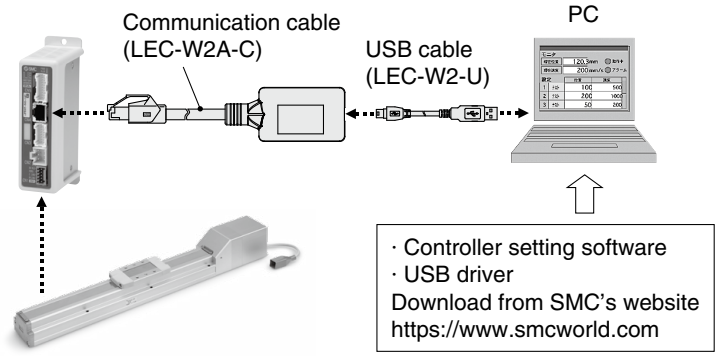

· Controller setting software
· USB driver
Download from SMC's website
https://www.smcworld.com

How to Order

LEC-W2A-C
- C: Communication cable

LEC-W2-U
- U: USB cable

Compatible Controller/Driver

Step data input type	**LECA6 Series**
Pulse input type	**LECPA Series**
Step Motor Controller	**JXCE1/91/P1/D1/L1 Series**

∗ When connecting to a JXCE1/91/P1/D1/L1 series product, use a conversion cable (P5062-5) as a relay.
Refer to page 745 for details on the communication cable for controller setting (JXC-W2A-C) which doesn't require a conversion cable.

Hardware Requirements

OS	Windows®7, Windows®8.1, Windows®10
Communication interface	USB 1.1 or USB 2.0 ports
Display	1024 x 768 or more

∗ Windows®7, Windows®8.1 and Windows®10 are registered trademarks of Microsoft Corporation in the United States.

Screen Example

Easy mode screen example

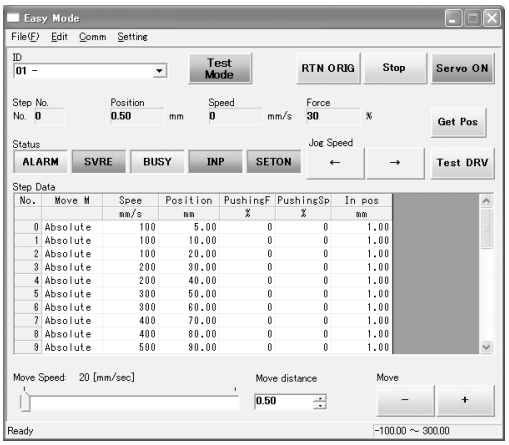

Easy operation and simple setting
- Allowing to set and display actuator step data such as position, speed, force, etc.
- Setting of step data and test drive can be performed on the same page.
- Can be used to jog and move at a constant rate

Normal mode screen example

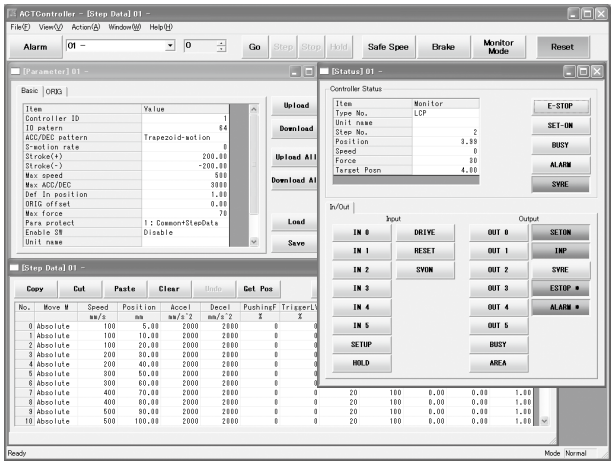

Detailed setting
- Step data can be set in detail.
- Signals and terminal status can be monitored.
- Parameters can be set.
- JOG and constant rate movement, return to origin, test drive and testing of forced output can be performed.

Compatible controllers

JXC□1 LECA6 LECPA

LEC-T1
Teaching Box



How to Order

LEC – T1 – 3 J G □

Teaching box

Cable length [m]

3	3

Initial language

J	Japanese
E	English

Stop switch

G	Equipped with stop switch

Enable switch

Nil	None
S	Equipped with enable switch

∗ Interlock switch for jog and test function

∗ The displayed language can be changed to English or Japanese.

Specifications

Item	Description
Switch	Stop switch, Enable switch (Option)
Cable length [m]	3
Enclosure	IP64 (Except connector)
Operating temperature range [°C]	5 to 50
Operating humidity range [%RH]	90 or less (No condensation)
Weight [g]	350 (Except cable)

[UL-compliant products]
When compliance with UL is required, the electric actuator and controller should be used with a UL1310 Class 2 power supply.

Standard functions
- **Chinese character display**
- **Stop switch is provided.**

Option
- **Enable switch is provided.**

Easy Mode

Function	Details
Step data	• Setting of step data
Jog	• Jog operation • Return to origin
Test	• 1 step operation • Return to origin
Monitor	• Display of axis and step data no. • Display of two items selected from Position, Speed, Force.
ALM	• Active alarm display • Alarm reset
TB setting	• Reconnection of axis (Ver. 1.∗∗) • Displayed language setting (Ver. 2.∗∗) • Setting of easy/normal mode • Setting step data and selection of items from easy mode monitor

Menu Operations Flowchart

Menu
- Data
- Monitor
- Jog
- Test
- ALM
- TB setting

Data
Step data no.
Setting of two items selected below
Ver. 1.∗∗:
Position, Speed, Force, Acceleration, Deceleration
Ver. 2.∗∗:
Position, Speed, Pushing force, Acceleration, Deceleration, Movement MOD, Trigger LV, Pushing speed, Moving force, Area 1, Area 2, In position

Monitor
Display of step no.
Display of two items selected below
(Position, Speed, Force)

Jog
Return to origin
Jog operation

Test
1 step operation

ALM
Active alarm display
Alarm reset

TB setting
Reconnect (Ver. 1.∗∗)
Japanese/English (Ver. 2.∗∗)
Easy/Normal
Set item

Normal Mode

Function	Details
Step data	• Step data setting
Parameter	• Parameters setting
Test	• Jog operation/Constant rate movement • Return to origin • Test drive (Specify a maximum of 5 step data and operate.) • Forced output (Forced signal output, Forced terminal output)
Monitor	• Drive monitor • Output signal monitor • Input signal monitor • Output terminal monitor • Input terminal monitor
ALM	• Active alarm display (Alarm reset) • Alarm log record display
File	• Data saving Save the step data and parameters of the controller which is being used for communication (it is possible to save four files, with one set of step data and parameters defined as one file). • Load to controller Loads the data which is saved in the teaching box to the controller which is being used for communication. • Delete the saved data. • File protection (Ver. 2.**)
TB setting	• Display setting (Easy/Normal mode) • Language setting (Japanese/English) • Backlight setting • LCD contrast setting • Beep sound setting • Max. connection axis • Distance unit (mm/inch)
Reconnect	• Reconnection of axis

Menu Operations Flowchart

- **Menu**: Step data / Parameter / Monitor / Test / ALM / File / TB setting / Reconnect
- **Step data**: Step data no. / Movement MOD / Speed / Position / Acceleration / Deceleration / Pushing force / Trigger LV / Pushing speed / Moving force / Area 1, 2 / In position
- **Parameter**: Basic / ORIG
  - **Basic setting**
  - **ORIG setting**
- **Monitor**: Drive / Output signal / Input signal / Output terminal / Input terminal
  - **DRV monitor**: Position, Speed, Torque / Step no. / Last step no.
  - **Output signal monitor**
  - **Input signal monitor**
  - **Output terminal monitor**
  - **Input terminal monitor**
- **Test**: JOG/MOVE / Return to ORIG / Test drive / Forced output
- **ALM**: Status / ALM Log record
  - **Status**: Active alarm display / Alarm reset
  - **ALM Log record display**: Log entry display
- **File**: Data saving / Load to controller / File deletion / File protection (Ver. 2.**)
- **TB setting**: Easy/Normal / Language / Backlight / LCD contrast / Beep / Max. connection axis / Password / Distance unit
- **Reconnect**

Dimensions

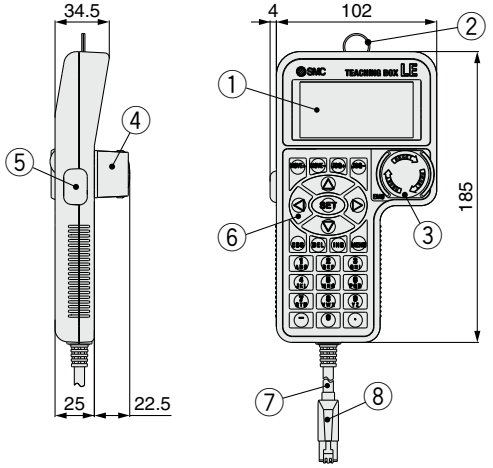

No.	Description	Function
1	**LCD**	A screen of liquid crystal display (with backlight)
2	**Ring**	A ring for hanging the teaching box
3	**Stop switch**	When switch is pushed in, the switch locks and stops. The lock is released when it is turned to the right.
4	**Stop switch guard**	A guard for the stop switch
5	**Enable switch (Option)**	Prevents unintentional operation (unexpected operation) of the jog test function. Other functions such as data change are not covered.
6	**Key switch**	Switch for each input
7	**Cable**	Length: 3 meters
8	**Connector**	A connector connected to CN4 of the controller