Mini Free Mount Cylinder

ø4, ø6, ø8, ø10, ø12, ø16, ø20



New Added ø12, ø16, ø20 bore sizes.

● : New additions

Series	Bore size (mm)	Action	Stroke (mm) 4	5	6	8	10	15	20	25	30	35	40	45	50	Clean series	Auto switch	Rod end
CUJ	4	Double acting	●		●	●	●	●	●								None	Male threaded Without thread
		Single acting, spring return	●		●													
	6	Double acting	●		●	●	●	●	●	●	●					●	Solid state switch D-F8□ D-M9□ D-M9□W	Female threaded Male threaded
		Single acting, spring return	●		●	●												
	8	Double acting	●		●	●	●	●	●	●	●					●		
		Single acting, spring return	●		●	●	●											
	10	Double acting	●		●	●	●	●	●	●	●					●		
		Single acting, spring return	●		●	●	●											
	12	Double acting		●			●	●	●	●	●					●		
		Single acting, spring return		●			●											
	16	Double acting		●			●	●	●	●	●					●		
		Single acting, spring return		●			●											
	20	Double acting		●			●	●	●	●	●	●	●	●	●	●		
		Single acting, spring return		●			●											

Series CUJ

SMC

CAT.ES20-157C

Miniature Body

- **Full length is shortened by up to approx. 20%.**
- **Volume is reduced by up to approx. 45%.**

(Compared with the CQS series cylinders, double acting, with magnet)

Dimensions (With Magnet) (mm)

Bore size (mm)	A(a)	B(b)	C(c)
12	17 (25)	26.5 (25)	19.5 (22)
16	21 (29)	29.5 (29)	21 (22)
20	25 (36)	36 (36)	23.5 (29.5)

( ): Dimensions of the CQS series cylinders

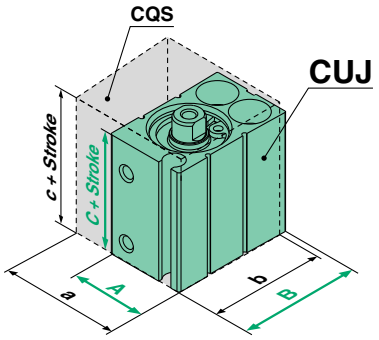

- **Full length is shortened by up to approx. 64%.**
- **Volume is reduced by up to approx. 70%.**

(Compared with the CU series cylinders, double acting, without magnet)

Dimensions (Without Magnet) (mm)

Bore size (mm)	A(a)	B(b)	C(c)
4	10 (—)	15 (—)	13 (—)
6	13 (13)	19 (22)	13 (33)
8	13 (—)	21 (—)	13 (—)
10	13.5 (15)	22 (24)	13 (36)
12	17 (—)	26.5 (—)	15.5 (—)
16	21 (20)	29.5 (32)	16.5 (30)
20	25 (26)	36 (40)	19.5 (36)

( ): Dimensions of the CU series cylinders

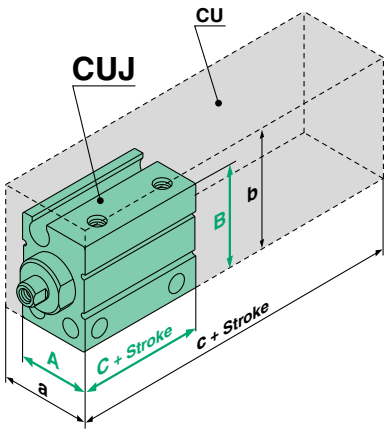

Concentrates wiring and piping on one side

Allows more efficient installation, since four directions can be used freely.

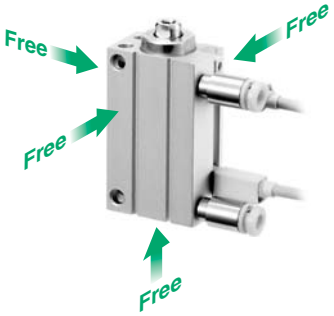

ø4, ø6, ø8, ø10

Allows installation from four directions.

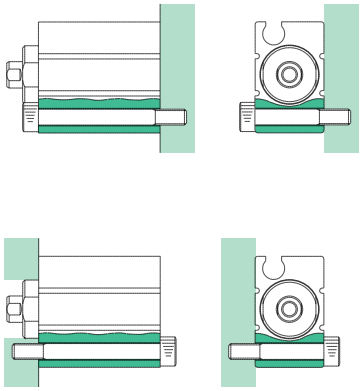

ø12, ø16, ø20

With counterbore for mounting

2 kinds of bodies are available.
There is no protrusion for a mounting bolt.

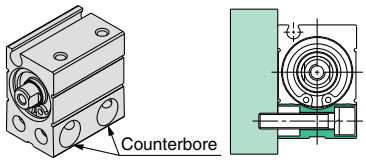

Lateral mounting body/CUJB

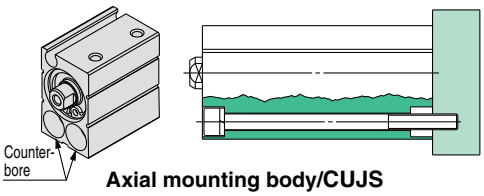

Axial mounting body/CUJS

Series CUJ ø4, ø6, ø8, ø10, ø12, ø16, ø20

Two auto switches can be installed even for a 4 mm stroke.*

* ø12 to ø20 are available starting from a 5 mm stroke.

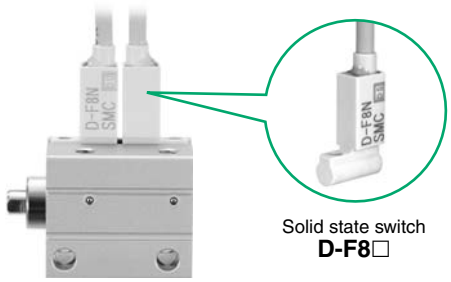

Solid state switch
D-F8□

Easy seal replacement

Seals can be replaced easily by just removing the rod cover (ø4 to ø10) or retaining ring (ø12 to ø20).

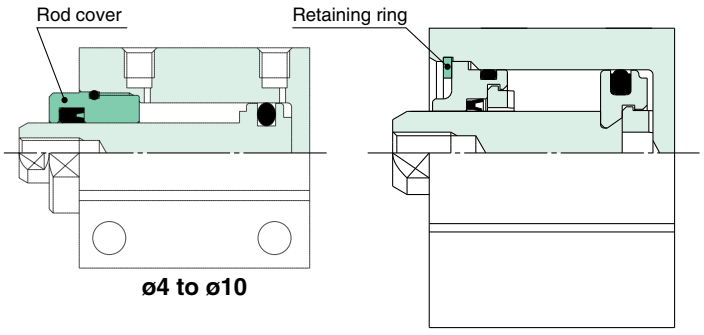

ø4 to ø10

ø12 to ø20

ø4, ø6, ø8, ø10

With boss (h9)

Centering can be done easily.

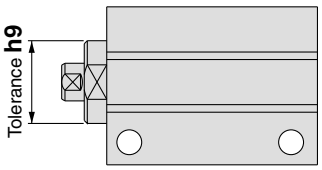

Clean room compliant Clean Series (except ø4)

Series CUJ 10- 11-

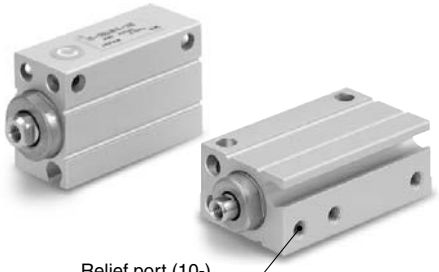

Relief port (10-)
Vacuum port (11-)

ø12, ø16, ø20

Standard equipment with damper

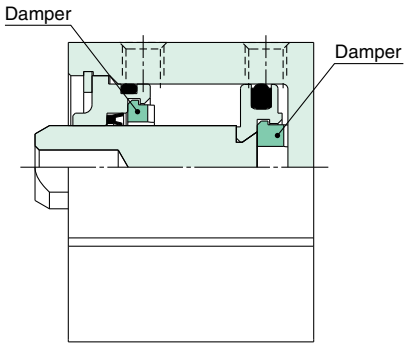

RoHS compliant

Applications

Short pitch mounting is possible.

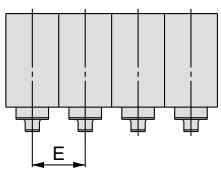

Pitch Dimensions
(Without Magnet) (mm)

Bore size	E
4	10 Note 1)
6	13 Note 1)
8	13 Note 1)
10	13.5 Note 1)
12	17
16	21
20	25

Note 1) Body width dimensions have plus tolerances, so E dimensions should also be designed for plus tolerances. (ø4 to ø10 only)
Note 2) Refer to page 18 for built-in magnet.

Lowering the center of gravity when using an external guide

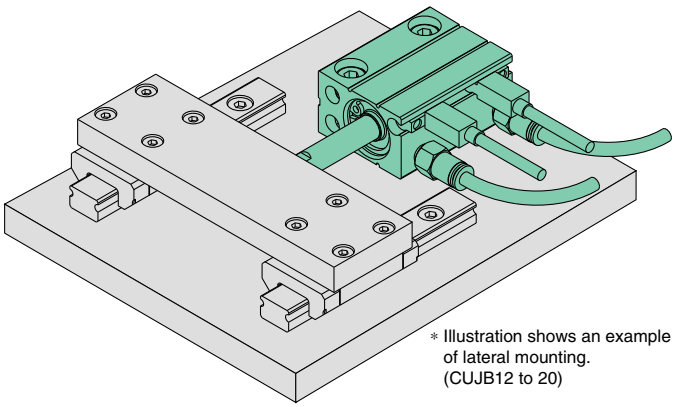

* Illustration shows an example of lateral mounting. (CUJB12 to 20)

Mini Free Mount Cylinder
Series CUJ
ø4, ø6, ø8, ø10

How to Order

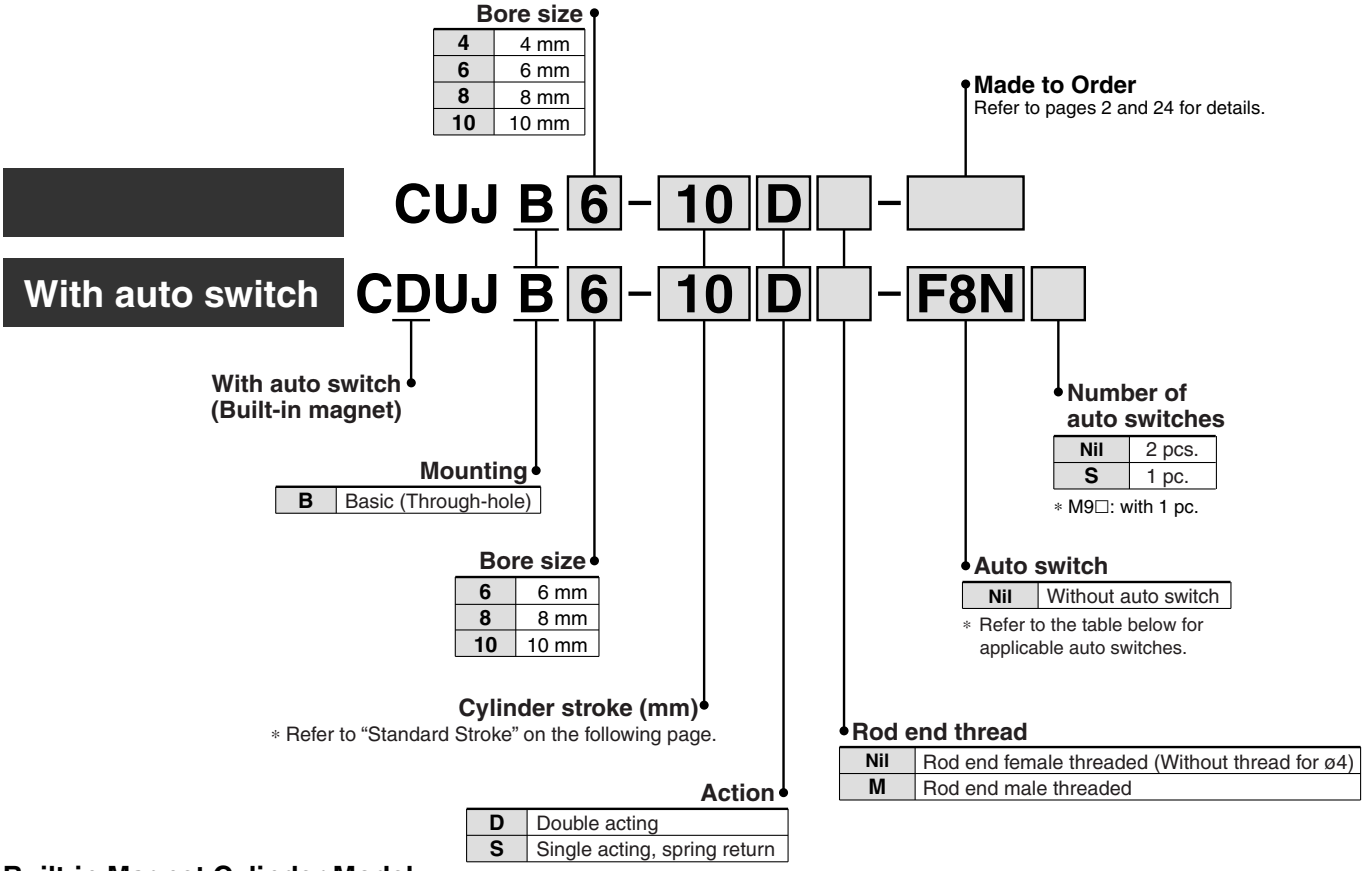

Built-in Magnet Cylinder Model

In the case of built-in magnet without auto switch, the symbol for auto switch is "Nil".
(Example) CDUJB8-15DM

Applicable Auto Switches/Refer to pages 21 through to 23 for additional information on auto switches.

Type	Special function	Electrical entry	Indicator light	Wiring (Output)	Load voltage DC	Load voltage AC	Auto switch model: Electrical entry Perpendicular	Auto switch model: Electrical entry In-line	Lead wire length (m) ∗ 0.5 (Nil)	1 (M)	3 (L)	5 (Z)	Pre-wired connector	Applicable load	
Solid state switch	—	Grommet	Yes	3-wire (NPN)	5 V, 12 V	—	—	**M9N**	●	—	●	○	○	IC circuit	Relay, PLC
							F8N	—	●	—	●	○	○		
				3-wire (PNP)			—	**M9P**	●	—	●	○	○		
							F8P	—	●	—	●	○	○		
				2-wire	24 V	12 V	—	**M9B**	●	—	●	○	○	—	
							F8B	—	●	—	●	○	○		
	Diagnostic indication (2-color indication)			3-wire (NPN)	5 V, 12 V		—	**M9NW**	●	●	●	○	○	IC circuit	
				3-wire (PNP)			—	**M9PW**	●	●	●	○	○		
				2-wire	12 V		—	**M9BW**	●	●	●	○	○	—	

∗ Lead wire length symbols: 0.5 m ····· Nil (Example) M9NW
1 m ····· M (Example) M9NWM
3 m ····· L (Example) M9NWL
5 m ····· Z (Example) M9NWZ

∗ Auto switches marked with "○" are produced upon receipt of order.

Note 1) For 2-color indication type, use caution on hysteresis. Refer to page 19, "Auto Switch Hysteresis" prior to use.
Note 2) Refer to pages 21 through to 23 for detailed auto switch specifications.
∗ Refer to "Best Pneumatics" catalog for further information on auto switches with pre-wired connector.
∗ Auto switches are included, (but not assembled).



JIS Symbol

Double acting, single rod

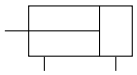

Single acting, spring return

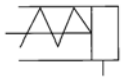

Specifications

Bore size (mm)		4	6	8	10
Action		Double acting; Single acting, spring return			
Fluid		Air			
Proof pressure		1.05 MPa			
Minimum operating pressure	**Double acting**	0.15 MPa			0.1 MPa
	Single acting, spring return	0.35 MPa	0.3 MPa		0.2 MPa
Maximum operating pressure		0.7 MPa			
Ambient and fluid temperature		Without auto switch: –10 to 70°C (No freezing) With auto switch: –10 to 60°C (No freezing)			
Cushion		None			
Lubrication		Non-lube			
Piston speed		50 to 500 mm/s			
Stroke length tolerance		$^{+0.5}_{0}$			
Mounting		Through-hole			

Theoretical Output: Double Acting



Unit: N

Bore size (mm)	Rod size (mm)	Operating direction	Piston area (mm^2)	Operating pressure (MPa)		
				0.3	0.5	0.7
4	**2**	OUT	12.6	3.76	6.28	8.79
		IN	9.4	2.82	4.71	6.59
6	**4**	OUT	28.3	8.48	14.13	19.79
		IN	15.7	4.71	7.85	10.99
8	**5**	OUT	50.3	15.07	25.13	35.18
		IN	30.6	9.18	15.31	21.44
10	**6**	OUT	78.5	23.56	39.26	54.97
		IN	50.3	15.07	25.13	35.18

Spring Reaction Force: Single Acting, Spring Return

Spring in pre-loaded condition
IN

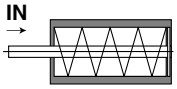

When the spring is set in the cylinder.

Spring in loaded condition
OUT

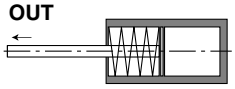

When the spring is contracted by applying air.

Unit: N

Bore size (mm)	Spring condition	Stroke (mm)			
		4	6	8	10
4	Pre-loaded	1.70	1.27	—	—
	Loaded	2.55	2.55	—	—
6	Pre-loaded	2.45	2.01	1.57	—
	Loaded	3.33	3.33	3.33	—
8	Pre-loaded	4.67	3.76	2.86	1.96
	Loaded	6.47	6.47	6.47	6.47
10	Pre-loaded	5.04	4.18	3.31	2.45
	Loaded	6.77	6.77	6.77	6.77

Standard Stroke

Action	Bore size (mm)	Standard stroke (mm)
Double acting	4	4, 6, 8, 10, 15, 20
	6	4, 6, 8, 10, 15, 20
	8, 10	25, 30
Single acting, spring return	4	4, 6
	6	4, 6, 8
	8, 10	4, 6, 8, 10

Made to Order

(Refer to page 24 for details.)

Symbol	Contents
-XB6	Heat resistant cylinder (–10 to 150°C)

Note) Except models with auto switch and single-acting, spring return type
Except bore size 4

Mass: Double Acting

Unit: g

Bore size (mm)	Standard stroke (mm)								Additional mass	
	4	6	8	10	15	20	25	30	Built-in magnet	Rod end male threaded
CUJB4	7.2	7.9	8.6	9.3	11.1	12.8	—	—	—	0.4
CUJB6	12.4	13.6	14.8	16.0	18.9	21.8	24.7	27.6	2.7	0.8
CUJB8	15.6	17.0	18.4	19.7	23.0	26.4	29.9	33.4	3.0	1.5
CUJB10	17.9	19.4	20.8	22.3	25.9	29.5	33.1	36.7	3.2	2.6

Mass: Single Acting, Spring Return

Unit: g

Bore size (mm)	Standard stroke (mm)				Additional mass	
	4	6	8	10	Built-in magnet	Rod end male threaded
CUJB4	7.2	7.9	—	—	—	0.4
CUJB6	12.8	14.0	15.2	—	2.4	0.8
CUJB8	15.8	17.2	18.6	19.9	2.5	1.5
CUJB10	17.9	19.4	20.8	22.3	2.4	2.6

Mounting

How to Mount: Through-hole mounting bolts are available.
How to Order: Add the "CUJ-" in front of the bolts to be used.

Example) CUJ-M3 x 27 ℓ

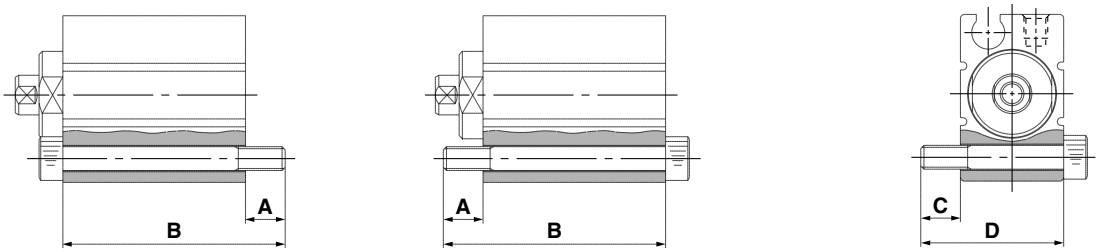

Axial mounting **Lateral mounting**

Without Auto Switch (Without Magnet)

For Axial Mounting

Cylinder model	A	B	Mounting bolt size
CUJB4-4	4	21	M2.5 x 21 ℓ
-6		23	M2.5 x 23 ℓ
-8		25	M2.5 x 25 ℓ
-10		27	M2.5 x 27 ℓ
-15		32	M2.5 x 32 ℓ
-20		37	M2.5 x 37 ℓ Note)
CUJB6-4	5	22	M3 x 22 ℓ
-6		24	M3 x 24 ℓ
-8		26	M3 x 26 ℓ
-10		28	M3 x 28 ℓ
-15		33	M3 x 33 ℓ
-20		38	M3 x 38 ℓ
-25		43	M3 x 43 ℓ
-30		48	M3 x 48 ℓ
CUJB8-4	5	22	M3 x 22 ℓ
-6		24	M3 x 24 ℓ
-8		26	M3 x 26 ℓ
-10		28	M3 x 28 ℓ
-15		33	M3 x 33 ℓ
-20		38	M3 x 38 ℓ
-25		43	M3 x 43 ℓ
-30		48	M3 x 48 ℓ
CUJB10-4	5	22	M3 x 22 ℓ
-6		24	M3 x 24 ℓ
-8		26	M3 x 26 ℓ
-10		28	M3 x 28 ℓ
-15		33	M3 x 33 ℓ
-20		38	M3 x 38 ℓ
-25		43	M3 x 43 ℓ
-30		48	M3 x 48 ℓ

Note) Only M2.5 x 37 ℓ is made of stainless steel.

For Lateral Mounting

Cylinder model	C	D	Mounting bolt size
CUJB4-4	4	14	M2.5 x 14 ℓ
-6			
-8			
-10			
-15			
-20			
CUJB6-4	5	18	M3 x 18 ℓ
-6			
-8			
-10			
-15			
-20			
-25			
-30			
CUJB8-4	5	18	M3 x 18 ℓ
-6			
-8			
-10			
-15			
-20			
-25			
-30			
CUJB10-4	5	18	M3 x 18 ℓ
-6			
-8			
-10			
-15			
-20			
-25			
-30			

With Auto Switch (Built-in Magnet)

For Axial Mounting

Cylinder model	A	B	Mounting bolt size
CDUJB6-4	5	27	M3 x 27 ℓ
-6		29	M3 x 29 ℓ
-8		31	M3 x 31 ℓ
-10		33	M3 x 33 ℓ
-15		38	M3 x 38 ℓ
-20		43	M3 x 43 ℓ
-25		48	M3 x 48 ℓ
-30		53	M3 x 53 ℓ
CDUJB8-4	5	27	M3 x 27 ℓ
-6		29	M3 x 29 ℓ
-8		31	M3 x 31 ℓ
-10		33	M3 x 33 ℓ
-15		38	M3 x 38 ℓ
-20		43	M3 x 43 ℓ
-25		48	M3 x 48 ℓ
-30		53	M3 x 53 ℓ
CDUJB10-4	5	27	M3 x 27 ℓ
-6		29	M3 x 29 ℓ
-8		31	M3 x 31 ℓ
-10		33	M3 x 33 ℓ
-15		38	M3 x 38 ℓ
-20		43	M3 x 43 ℓ
-25		48	M3 x 48 ℓ
-30		53	M3 x 53 ℓ

For Lateral Mounting

Cylinder model	C	D	Mounting bolt size
CDUJB6-4	5	18	M3 x 18 ℓ
-6			
-8			
-10			
-15			
-20			
-25			
-30			
CDUJB8-4	5	18	M3 x 18 ℓ
-6			
-8			
-10			
-15			
-20			
-25			
-30			
CDUJB10-4	5	18	M3 x 18 ℓ
-6			
-8			
-10			
-15			
-20			
-25			
-30			

■ Clean Series

How to Order

10 – C **D** UJB **6** – **8** **D** ** ** – **F8N** ** **

Clean Series

10	Relieving type
11	Vacuum type

Built-in magnet

Nil	None
D	Yes (Built-in)

Bore size

6	6 mm
8	8 mm
10	10 mm

Double acting

Stroke

Bore size (mm)	Stroke (mm)					
	4	**6**	**8**	**10**	**15**	**20**
6	●	●	●	●	●	
8	●	●	●	●	●	●
10	●	●	●	●	●	●

∗ Contact SMC for strokes other than those shown above.

Rod end thread

Nil	Rod end female threaded
M	Rod end male threaded

Auto switch

Nil	Without auto switch

∗ Applicable auto switch models are the same as those for the standard, double acting type. Refer to page 1.

Number of auto switches

Nil	2 pcs.
S	1 pc.

∗ M9□: with 1 pc.

Specifications

The specifications are the same as those for the standard, double acting type. Refer to page 2. However, the operating piston speed is ranged from 50 to 400 mm/s.

Dimensions

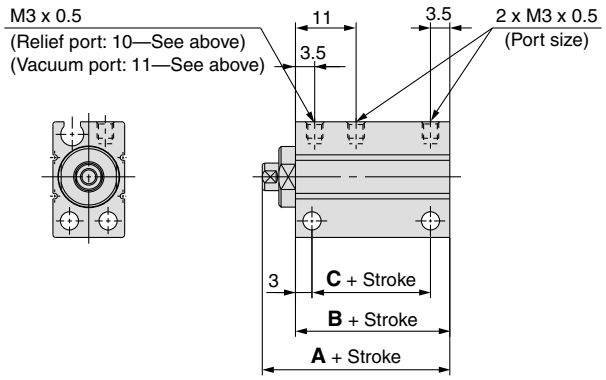

(mm)

Bore size (mm)	Without auto switch			With auto switch		
	A	**B**	**C**	**A**	**B**	**C**
6, 8, 10	24	18	11.5	29	23	16.5



Construction

Double Acting

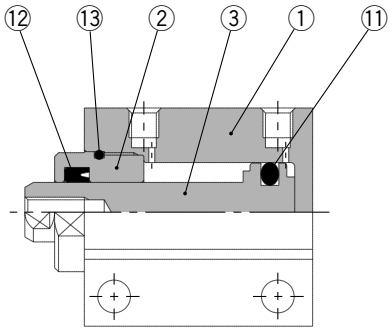

Without magnet

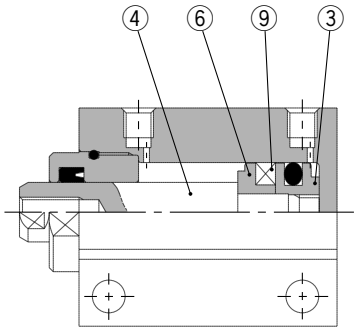

Built-in magnet

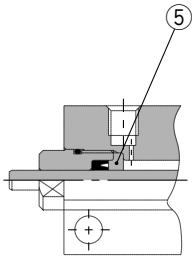

ø4

Single Acting, Spring Return

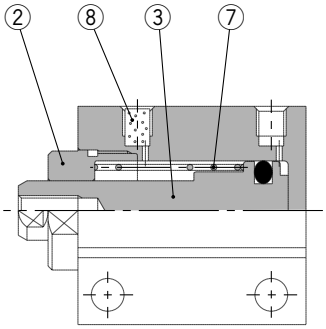

Without magnet

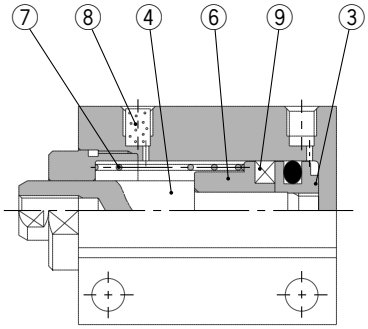

Built-in magnet

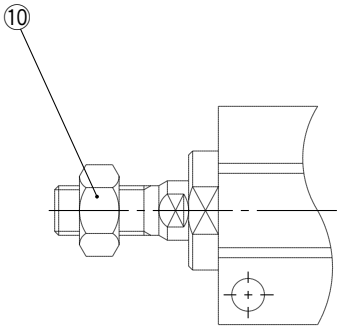

Rod end male threaded

Component Parts

No.	Description		Material	Note
1	**Cylinder tube**		Aluminum alloy	Hard anodized
2	**Rod cover**		Copper alloy	Electroless nickel plated
3	**Piston**	**Without switch**	Stainless steel	
		With switch	Aluminum alloy	Chromated
4	**Piston rod**		Stainless steel	
5	**Seal retainer**		Aluminum alloy	Chromated (CUJB4 only)
6	**Magnet retainer**		Aluminum alloy	Chromated
7	**Return spring**		Piano wire	
8	**Bronze element**		Sintered metallic BC	
9	**Magnet**		—	
10	**Rod end nut**		Iron	Nickel plated
11	**Piston seal**		NBR	
12	**Rod seal**		NBR	
13	**Tube gasket**		NBR	

Replacement Parts: Seal Kit
Double Acting

Bore size (mm)	Kit no.	Contents
4	CUJB4-PS	Set of ⑪, ⑫, ⑬ and grease pack.
6	CUJB6-PS	
8	CUJB8-PS	
10	CUJB10-PS	

∗ Seal kit ⑪ to ⑬ comes as a set. Use the kit number for each bore size.

Single Acting, Spring Return

Bore size (mm)	Kit no.	Contents
4	CUJB4-S-PS	Set of ⑪ and grease pack.
6	CUJB6-S-PS	
8	CUJB8-S-PS	
10	CUJB10-S-PS	

∗ Use the following part number for ordering a grease pack only.
Grease part no.: GR-L-005 (5 g)

Dimensions: ø4 Double Acting; Single Acting, Spring Return

Without Magnet: CUJB4

Note) The position of the width across flats may not be parallel to the cylinder tube.

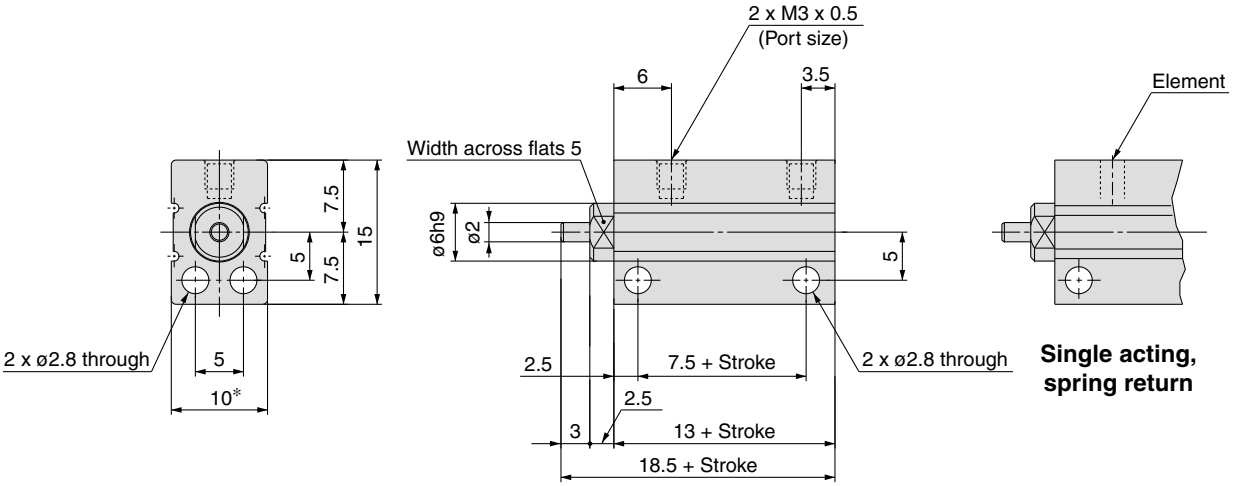

Rod end male threaded

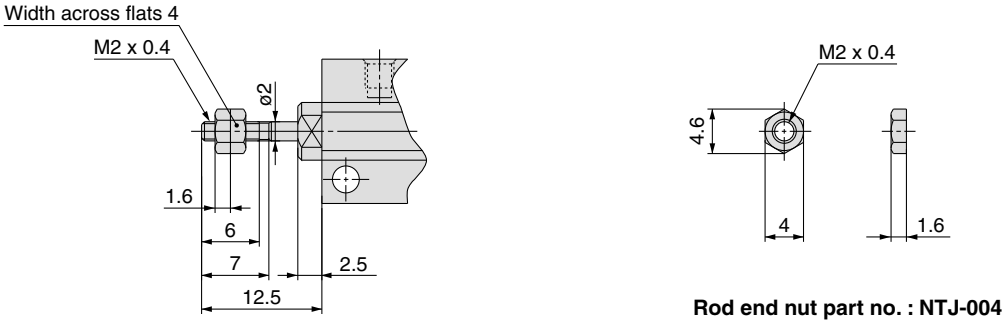

Rod end nut part no. : NTJ-004

* Use caution especially when multiple cylinders are used in pararell such as stacking because the body width dimensions have plus tolerances.
Contact SMC for a product with body width dimensions having different tolerances.

Dimensions: ø6 Double Acting; Single Acting, Spring Return

Without Magnet: CUJB6

Note) The position of the width across flats may not be parallel to the cylinder tube.

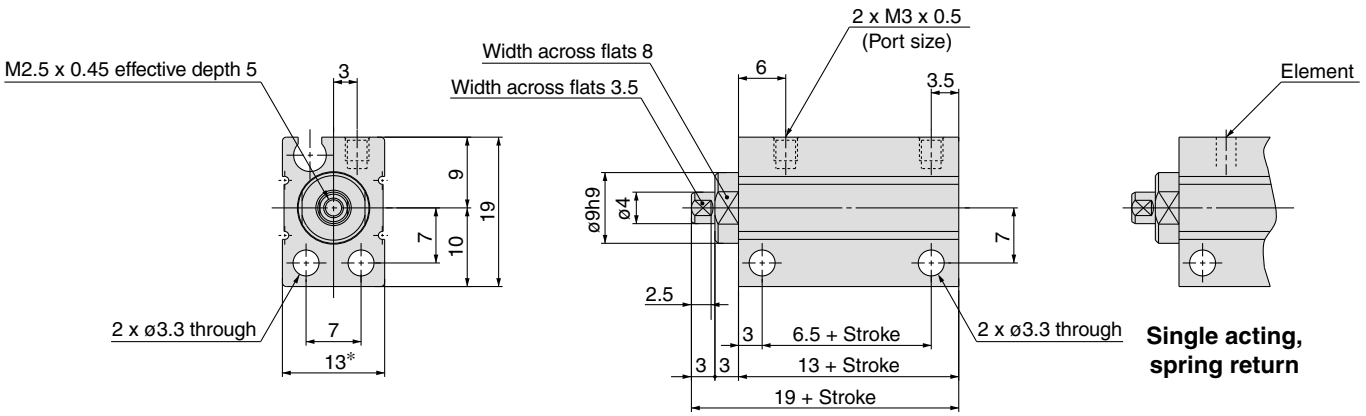

Built-in Magnet: CDUJB6

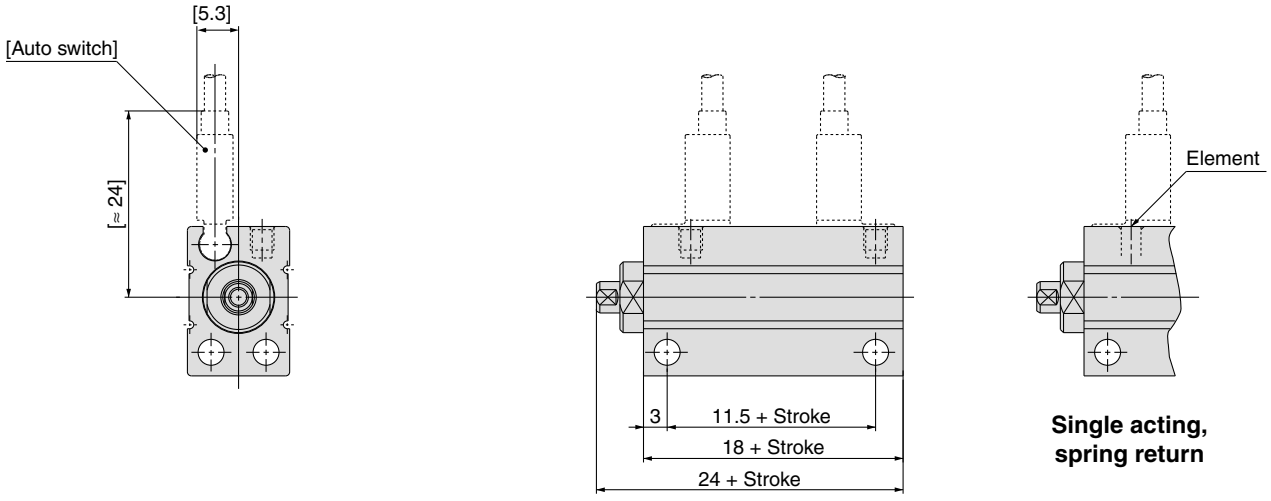

Rod end male threaded

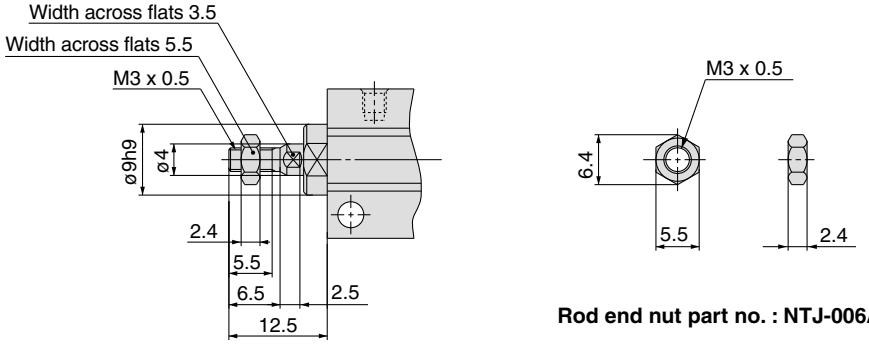

Rod end nut part no. : NTJ-006A

* Use caution especially when multiple cylinders are used in pararell such as stacking because the body width dimensions have plus tolerances.
Contact SMC for a product with body width dimensions having different tolerances.

Dimensions: ø8 Double Acting; Single Acting, Spring Return

Without Magnet: CUJB8

Note) The position of the width across flats may not be parallel to the cylinder tube.

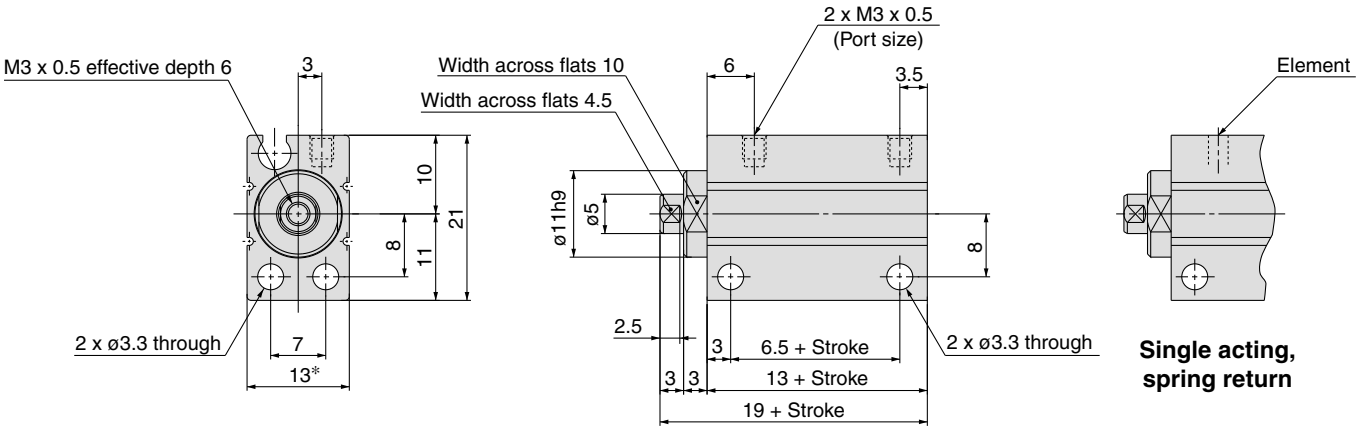

Built-in Magnet: CDUJB8

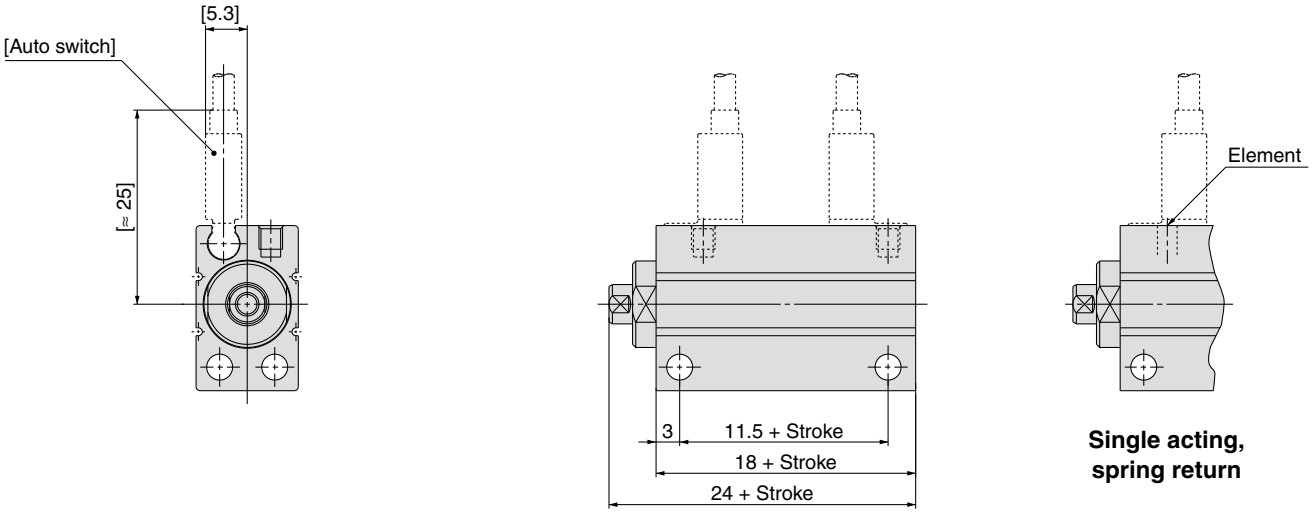

Rod end male threaded

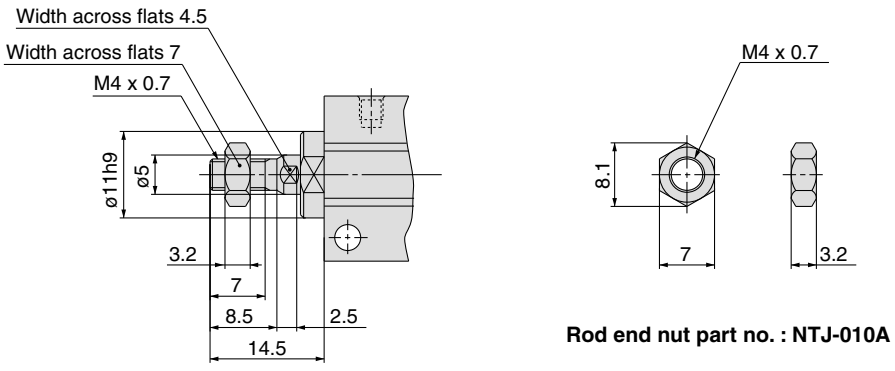

Rod end nut part no. : NTJ-010A

∗ Use caution especially when multiple cylinders are used in pararell such as stacking because the body width dimensions have plus tolerances.
Contact SMC for a product with body width dimensions having different tolerances.

Dimensions: ø10 Double Acting; Single Acting, Spring Return

Without Magnet: CUJB10

Note) The position of the width across flats may not be parallel to the cylinder tube.

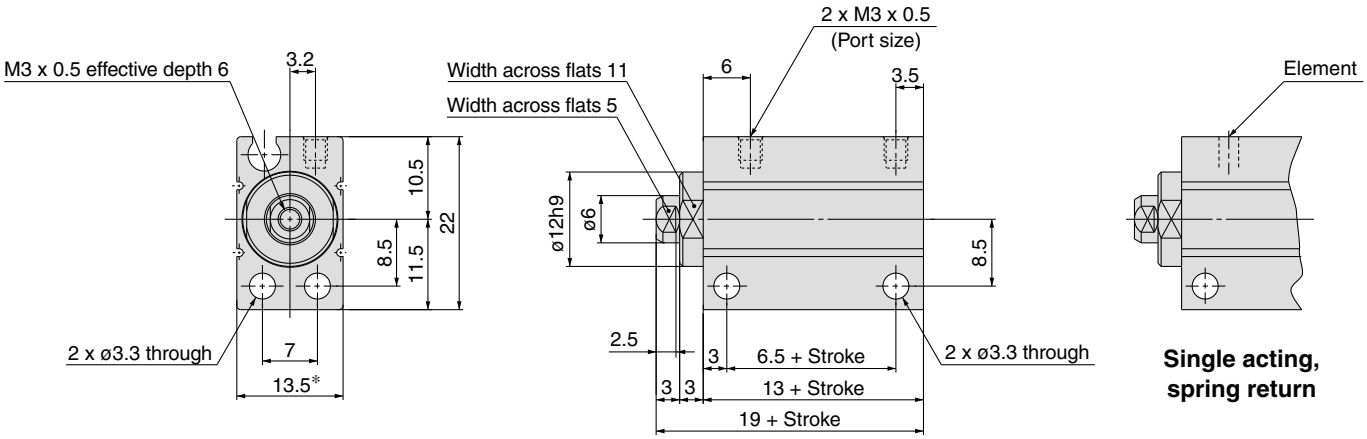

Single acting, spring return

Built-in Magnet: CDUJB10

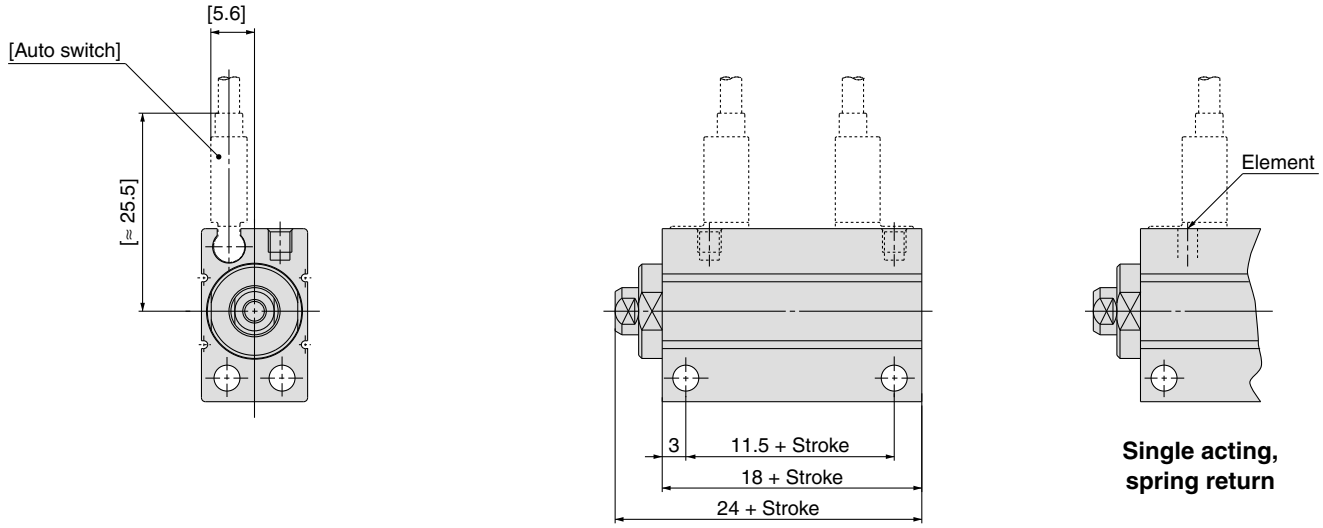

Single acting, spring return

Rod end male threaded

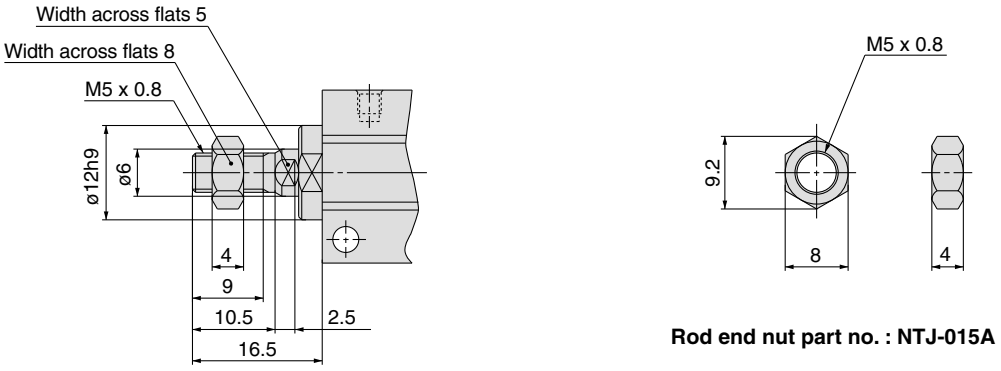

Rod end nut part no. : NTJ-015A

* Use caution especially when multiple cylinders are used in pararell such as stacking because the body width dimensions have plus tolerances.
Contact SMC for a product with body width dimensions having different tolerances.

Mini Free Mount Cylinder
Series CUJ
ø12, ø16, ø20

How to Order

CUJ **B** **12** – **30** **D** ☐

With auto switch **CDUJ** **B** **12** – **30** **D** ☐ – **F8N** ☐

With auto switch (Built-in magnet)

Mounting direction

B	Lateral mounting 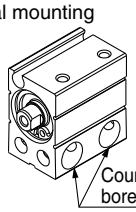
S	Axial mounting 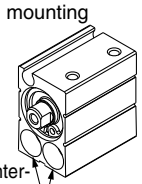

Auto switch

Nil	2 pcs.
S	1 pc.

∗ M9□: with 1 pc.

Auto switch

Nil	Without auto switch

∗ Refer to the table below for applicable auto switches.

Rod end thread

Nil	Rod end female threaded
M	Rod end male threaded

Action

D	Double acting
S	Single acting, spring return

Bore size

12	12 mm
16	16 mm
20	20 mm

Cylinder stroke (mm)

∗ Refer to "Standard Stroke" on the following page.

Built-in Magnet Cylinder Model

In the case of built-in magnet without auto switch, the symbol for auto switch is "Nil".
(Example) CDUJB12-15DM

Applicable Auto Switches/Refer to pages 21 through to 23 for additional information on auto switches.

Type	Special function	Electrical entry	Indicator light	Wiring (Output)	Load voltage			Auto switch model		Lead wire length (m) ∗				Pre-wired connector	Applicable load	
					DC		AC	Electrical entry		0.5 (Nil)	1 (M)	3 (L)	5 (Z)			
								Perpendicular	In-line							
Solid state switch	—	Grommet	Yes	3-wire (NPN)	24 V	5 V, 12 V	—	—	**M9N**	●	—	●	○	○	IC circuit	Relay, PLC
								F8N	—	●	—	●	○	○		
				3-wire (PNP)				—	**M9P**	●	—	●	○	○		
								F8P	—	●	—	●	○	○		
				2-wire		12 V		—	**M9B**	●	—	●	○	○	—	
								F8B	—	●	—	●	○	○		
	Diagnostic indication (2-color indication)			3-wire (NPN)		5 V, 12 V		—	**M9NW**	●	●	●	○	○	IC circuit	
				3-wire (PNP)				—	**M9PW**	●	●	●	○	○		
				2-wire		12 V		—	**M9BW**	●	●	●	○	○	—	

∗ Lead wire length symbols: 0.5 m ····· Nil (Example) M9NW
1 m ····· M (Example) M9NWM
3 m ····· L (Example) M9NWL
5 m ····· Z (Example) M9NWZ

∗ Auto switches marked with "○" are produced upon receipt of order.

Note 1) For 2-color indication type, use caution on hysteresis. Refer to page 19, "Auto Switch Hysteresis" prior to use.
Note 2) Refer to pages 21 through to 23 for detailed auto switch specifications.
∗ Refer to "Best Pneumatics" catalog for further information on auto switches with pre-wired connector.
∗ Auto switches are included, (but not assembled).



Specifications

Bore size (mm)		12	16	20
Action		Double acting; Single acting, spring return		
Fluid		Air		
Proof pressure		1.05 MPa		
Minimum operating pressure	**Double acting**	0.07 MPa		0.05 MPa
	Single acting, spring return	0.25 MPa		0.18 MPa
Maximum operating pressure		0.7 MPa		
Ambient and fluid temperature		Without auto switch: –10 to 70°C (No freezing) With auto switch: –10 to 60°C (No freezing)		
Cushion		Rubber bumper		
Lubrication		Non-lube		
Piston speed		50 to 500 mm/s*		
Stroke length tolerance		$^{+1.0}_{0}$		
Mounting		CUJB: Through-hole (lateral, axial direction: 2 locations each) CUJS: Through-hole (axial direction: 2 locations)		

* Depending on the circuit condition, the piston speed may not reach the maximum speed.

Theoretical Output: Double Acting



Unit: N

Bore size (mm)	Rod size (mm)	Operating direction	Piston area (mm^2)	Operating pressure (MPa)		
				0.3	0.5	0.7
12	**6**	OUT	113	34	57	79
		IN	84.8	25	42	59
16	**8**	OUT	201	60	101	141
		IN	151	45	75	106
20	**10**	OUT	314	94	157	220
		IN	236	71	118	165

JIS Symbol

Double acting, single rod

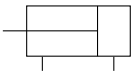

Single acting, spring return

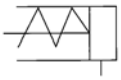

Spring Reaction Force: Single Acting, Spring Return

Spring in pre-loaded condition

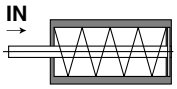

When the spring is set in the cylinder.

Spring in loaded condition

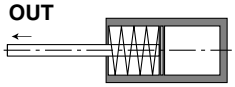

When the spring is contracted by applying air.

Unit: N

Bore size (mm)	Spring condition	Stroke (mm)	
		5	10
12	Pre-loaded	6	3.5
	Loaded	9.5	9.5
16	Pre-loaded	7.5	4.5
	Loaded	11	11
20	Pre-loaded	10.5	5.5
	Loaded	16.5	16.5

* Moving the load with the thrust (spring response) on the spring return side will cause poor stroke.

Standard Stroke

Action	Bore size (mm)	Standard stroke (mm)
Double acting	12	5, 10, 15, 20 25, 30
	16	
	20	5, 10, 15, 20, 25 30, 35, 40, 45, 50
Single acting, spring return	12	5, 10
	16	
	20	

Mass: Double Acting

Unit: g

Bore size (mm)	Standard stroke (mm)										Additional mass	
	5	10	15	20	25	30	35	40	45	50	Built-in magnet	Rod end male threaded
CUJ□12	21	26	31	35	40	45	—	—	—	—	6	4
CUJ□16	32	39	46	53	60	67	—	—	—	—	9	8
CUJ□20	52	62	72	82	92	102	112	122	132	142	12	13

Mass: Single Acting, Spring Return

Unit: g

Bore size (mm)	Standard stroke (mm)		Additional mass	
	5	10	Built-in magnet	Rod end male threaded
CUJ□12	23	28	6	4
CUJ□16	34	41	9	8
CUJ□20	53	63	11	13

Mounting

How to Mount: Through-hole mounting bolts are available.
How to Order: Add the "CUJB-" in front of the bolts to be used.

Example) CUJB-M5 x 30 ℓ
(For CUJS20-5)

∗ The order number at left includes one mounting bolt and one spring washer.

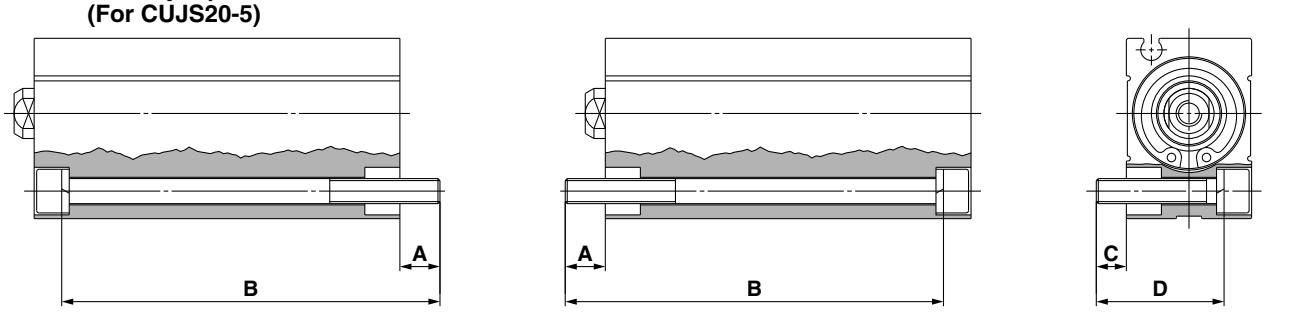

Axial mounting **Lateral mounting**

∗ When mounting the cylinder, be sure to use the included spring washer.

Without Auto Switch (Without Magnet)

For Axial Mounting Material: Structural steel

Cylinder model	A	B	Mounting bolt size
CUJS12-5	8.5	25	M4 x 25 ℓ
-10		30	M4 x 30 ℓ
-15		35	M4 x 35 ℓ
-20		40	M4 x 40 ℓ
-25		45	M4 x 45 ℓ
-30		50	M4 x 50 ℓ
CUJS16-5	7.5	25	M4 x 25 ℓ
-10		30	M4 x 30 ℓ
-15		35	M4 x 35 ℓ
-20		40	M4 x 40 ℓ
-25		45	M4 x 45 ℓ
-30		50	M4 x 50 ℓ
CUJS20-5	10.5	30	M5 x 30 ℓ
-10		35	M5 x 35 ℓ
-15		40	M5 x 40 ℓ
-20		45	M5 x 45 ℓ
-25		50	M5 x 50 ℓ
-30		55	M5 x 55 ℓ
-35		60	M5 x 60 ℓ
-40		65	M5 x 65 ℓ
-45		70	M5 x 70 ℓ
-50		75	M5 x 75 ℓ

For Lateral Mounting Material: Structural steel

Cylinder model	C	D	Mounting bolt size
CUJB12-5	8.5	20	M4 x 20 ℓ
-10			
-15			
-20			
-25			
-30			
CUJB16-5	9.5	25	M4 x 25 ℓ
-10			
-15			
-20			
-25			
-30			
CUJB20-5	7.5	25	M5 x 25 ℓ
-10			
-15			
-20			
-25			
-30			
-35			
-40			
-45			
-50			

With Auto Switch (Built-in Magnet)

For Axial Mounting Material: Structural steel

Cylinder model	A	B	Mounting bolt size
CDUJS12-5	9.5	30	M4 x 30 ℓ
-10		35	M4 x 35 ℓ
-15		40	M4 x 40 ℓ
-20		45	M4 x 45 ℓ
-25		50	M4 x 50 ℓ
-30		55	M4 x 55 ℓ
CDUJS16-5	8	30	M4 x 30 ℓ
-10		35	M4 x 35 ℓ
-15		40	M4 x 40 ℓ
-20		45	M4 x 45 ℓ
-25		50	M4 x 50 ℓ
-30		55	M4 x 55 ℓ
CDUJS20-5	11.5	35	M5 x 35 ℓ
-10		40	M5 x 40 ℓ
-15		45	M5 x 45 ℓ
-20		50	M5 x 50 ℓ
-25		55	M5 x 55 ℓ
-30		60	M5 x 60 ℓ
-35		65	M5 x 65 ℓ
-40		70	M5 x 70 ℓ
-45		75	M5 x 75 ℓ
-50		80	M5 x 80 ℓ

For Lateral Mounting Material: Structural steel

Cylinder model	C	D	Mounting bolt size
CDUJB12-5	8.5	20	M4 x 20 ℓ
-10			
-15			
-20			
-25			
-30			
CDUJB16-5	9.5	25	M4 x 25 ℓ
-10			
-15			
-20			
-25			
-30			
CDUJB20-5	7.5	25	M5 x 25 ℓ
-10			
-15			
-20			
-25			
-30			
-35			
-40			
-45			
-50			

■ Clean Series

How to Order

10 – C **D** UJ **B** **12** – **30** **D** ☐ – **F8N** ☐

Clean Series

10	Relieving type
11	Vacuum type

Built-in magnet

Nil	None
D	Yes (Built-in)

Mounting direction

B	Lateral mounting 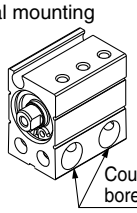
S	Axial mounting 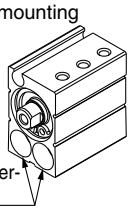

Bore size

12	12 mm
16	16 mm
20	20 mm

Double acting

Stroke

Bore size (mm)	Stroke (mm)									
	5	**10**	**15**	**20**	**25**	**30**	**35**	**40**	**45**	**50**
12	●	●	●	●	●	●	—	—	—	—
16	●	●	●	●	●	●	—	—	—	—
20	●	●	●	●	●	●	●	●	●	●

∗ Contact SMC for strokes other than those shown above.

Rod end thread

Nil	Rod end female threaded
M	Rod end male threaded

Auto switch

Nil	Without auto switch

∗ Applicable auto switch models are the same as those for the standard, double acting type. Refer to page 10.

Number of auto switches

Nil	2 pcs.
S	1 pc.

∗ M9☐: with 1 pc.

Specifications

The specifications are the same as those for the standard, double acting type. Refer to page 11.
However, the operating piston speed is ranged from 50 to 400 mm/s.

Dimensions

Lateral mounting/C☐UJB

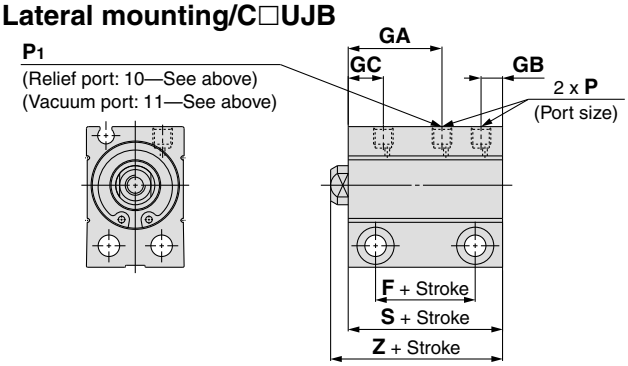

Axial mounting/C☐UJS

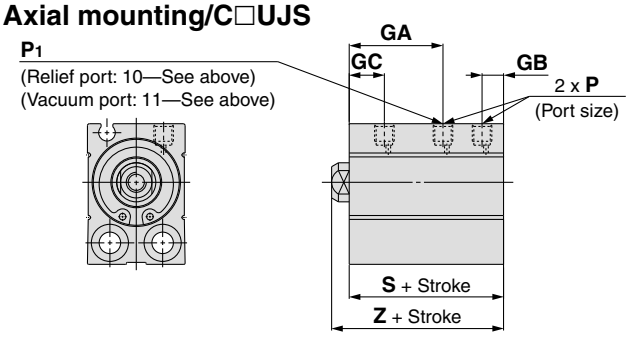

(mm)

Bore size (mm)	Without magnet			
	F	**GA**	**S**	**Z**
12	11.5	15.5	23.5	27
16	13.5	17.5	25.5	29
20	15.5	18.5	29.5	34

(mm)

Bore size (mm)	Built-in magnet			
	F	**GA**	**S**	**Z**
12	15.5	15.5	27.5	31
16	18	18	30	33.5
20	19.5	18.5	33.5	38

(mm)

Bore size (mm)	GC	GB	P1	P
12	7	4	M3 x 0.5	M3 x 0.5
16	8.5	4	M3 x 0.5	M3 x 0.5
20	8.5	5.5	M5 x 0.8	M5 x 0.8



Construction

Double Acting

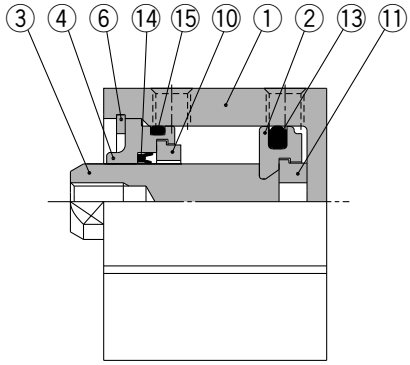

Without magnet

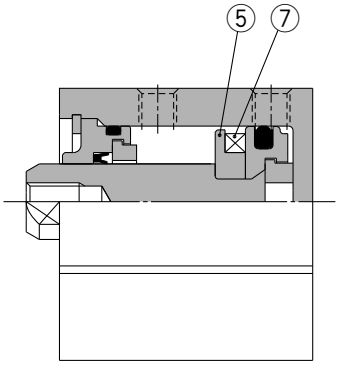

Built-in magnet

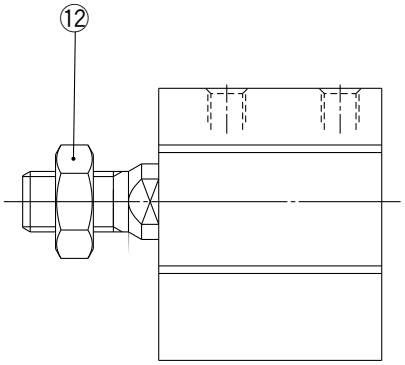

Rod end male threaded

Single Acting, Spring Return

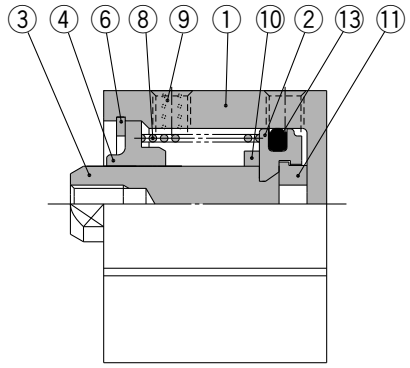

Without magnet

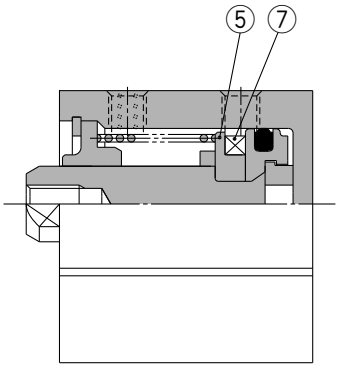

Built-in magnet

Component Parts

No.	Description	Material	Note
1	**Cylinder tube**	Aluminum alloy	Hard anodized
2	**Piston**	Aluminum alloy	Trivalent chromated
3	**Piston rod**	Stainless steel	
4	**Collar**	Aluminum alloy	Hard anodized
5	**Magnet holder**	Aluminum alloy	Trivalent chromated
6	**Retaining ring**	Steel for special applications	Phosphate coated
7	**Magnet**	—	
8	**Return spring**	Steel wire	Zinc trivalent chromated
9	**Element**	Bronze casted	(for ø12, ø16)
	Plug with fixed restrictor	Structural steel	Nickel plated (for ø20)
10	**Damper A**	Resin	
11	**Damper B**	Resin	
12	**Rod end nut**	Steel wire	Nickel plated
13	**Piston seal**	NBR	
14	**Rod seal**	NBR	
15	**O-ring**	NBR	

Replacement Parts: Seal Kit
Double Acting

Bore size (mm)	Kit no.	Contents
12	CUJB12-PS	Set of ⑬, ⑭, ⑮ and grease pack.
16	CUJB16-PS	
20	CUJB20-PS	

∗ Seal kit ⑬ to ⑮ comes as a set. Use the kit number for each bore size.

Single Acting, Spring Return

Bore size (mm)	Kit no.	Contents
12	CUJB12-S-PS	Set of ⑬ and grease pack.
16	CUJB16-S-PS	
20	CUJB20-S-PS	

∗ Use the following part number for ordering a grease pack only.
Grease part no.: GR-L-005 (5 g)

Dimensions: ø12, ø16, ø20 Double Acting; Single Acting, Spring Return

Lateral Mounting

Without Magnet: CUJB

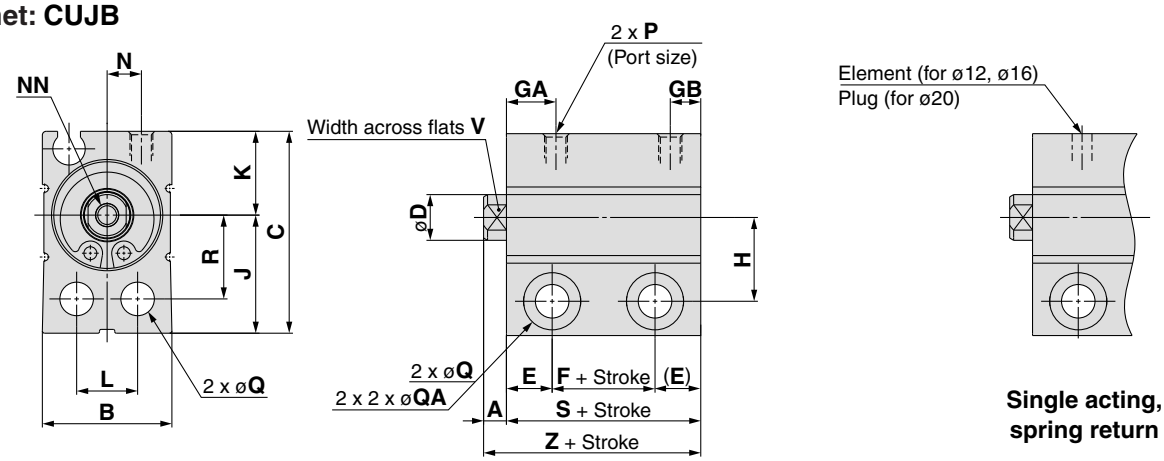

Built-in Magnet: CDUJB

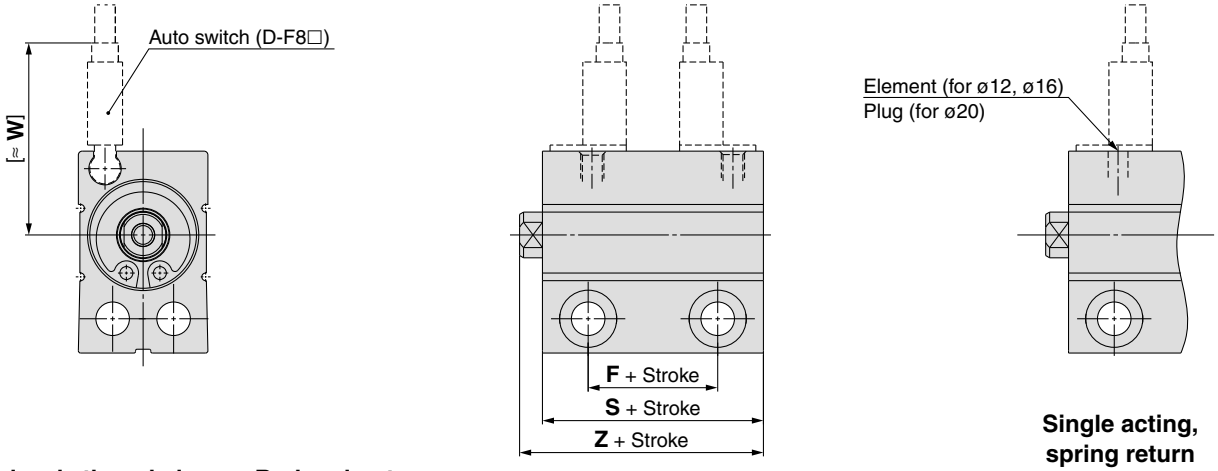

Rod end male threaded

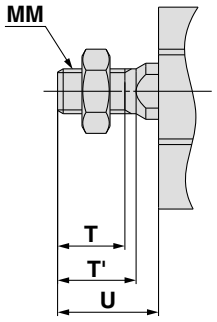

Rod end nut

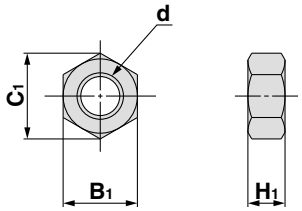

(mm)

Part no.	Bore size (mm)	d	H_1	B_1	C_1
NTJ-015A	12	M5 x 0.8	4	8	9.2
NT-015A	16	M6 x 1	5	10	11.5
NT-02	20	M8 x 1.25	5	13	15

(mm)

Bore size (mm)	A	B	C	D	E	GB	H	J	K	L	MM	NN	N	P	Q
12	3.5	17	26.5	6	6	4	11	15.5	11	8	M5 x 0.8	M3 x 0.5 effective depth of thread 6	3.5	M3 x 0.5	4.4 through
16	3.5	21	29.5	8	6	4	12.5	17	12.5	11.5	M6 x 1	M4 x 0.7 effective depth of thread 8	5.5	M3 x 0.5	4.4 through
20	4.5	25	36	10	7	5.5	15.5	21	15	13.5	M8 x 1.25	M5 x 0.8 effective depth of thread 7	7	M5 x 0.8	5.5 through

Bore size (mm)	QA	R	T	T'	U	V	W	Without magnet				Built-in magnet			
								F	GA	S	Z	F	GA	S	Z
12	7.5 depth, depth of counterbore 7	11	9	10.5	14	5	26	3.5 (5)	7.5	15.5 (17)	19 (20.5)	7.5 (9)	7.5	19.5 (21)	23 (24.5)
16	7.5 depth, depth of counterbore 7	12.5	10	12	15.5	6	27.5	4	8.5	16	20	8.5	9	20.5	24.5
20	9.5 depth, depth of counterbore 9	15.5	12	14	18.5	8	30	5.5	8.5	19.5	24	9.5	8.5	23.5	28

∗ ( ): Single acting, spring return

Axial Mounting

Without Magnet: CUJS

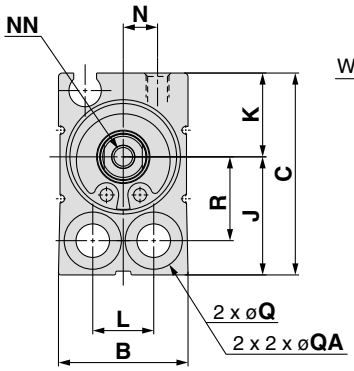

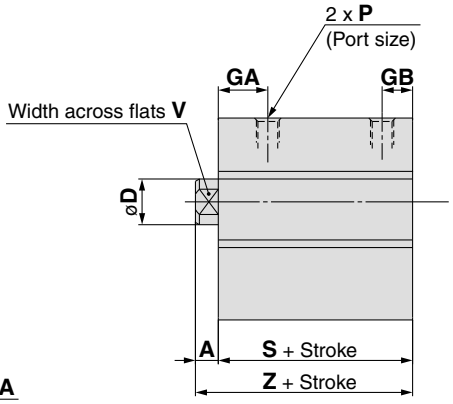

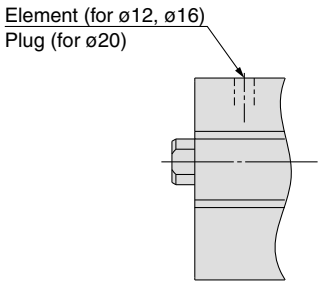

Single acting, spring return

Built-in Magnet: CDUJS

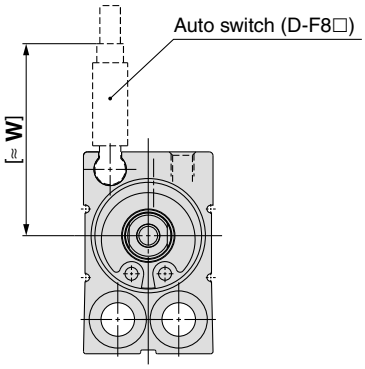

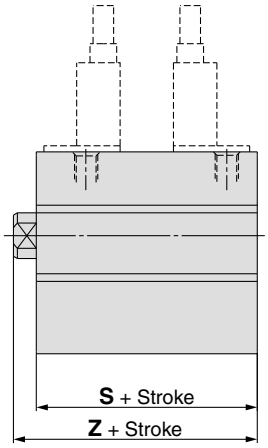

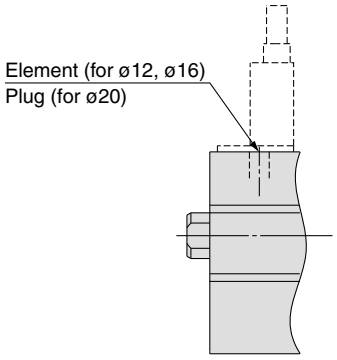

Single acting, spring return

Rod end male threaded

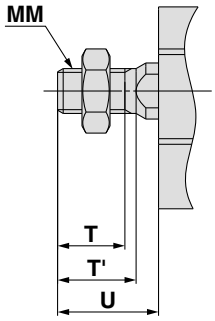

Rod end nut

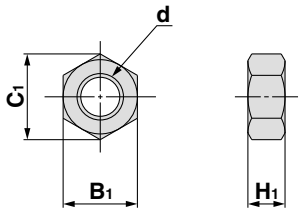

(mm)

Part no.	Bore size (mm)	d	H_1	B_1	C_1
NTJ-015A	12	M5 x 0.8	4	8	9.2
NT-015A	16	M6 x 1	5	10	11.5
NT-02	20	M8 x 1.25	5	13	15

(mm)

Bore size (mm)	A	B	C	D	GB	J	K	L	MM	NN	N	P	Q	QA
12	3.5	17	26.5	6	4	15.5	11	8	M5 x 0.8	M3 x 0.5 effective depth of thread 6	3.5	M3 x 0.5	4.4 through	7.5 depth, depth of counterbore 5.5
16	3.5	21	29.5	8	4	17	12.5	11.5	M6 x 1	M4 x 0.7 effective depth of thread 8	5.5	M3 x 0.5	4.4 through	7.5 depth, depth of counterbore 5.5
20	4.5	25	36	10	5.5	21	15	13.5	M8 x 1.25	M5 x 0.8 effective depth of thread 7	7	M5 x 0.8	5.5 through	9.5 depth, depth of counterbore 6.5

Bore size (mm)	R	T	T'	U	V	W	Without magnet			Built-in magnet		
							GA	S	Z	GA	S	Z
12	11	9	10.5	14	5	26	7.5	15.5 (17)	19 (20.5)	7.5	19.5 (21)	23 (24.5)
16	12.5	10	12	15.5	6	27.5	8.5	16	19.5	9	20.5	24
20	15.5	12	14	18.5	8	30	8.5	19.5	24	8.5	23.5	28

∗ ( ): Single acting, spring return

Auto Switch: Proper Mounting Position (Detection at Stroke End)

D-F8□

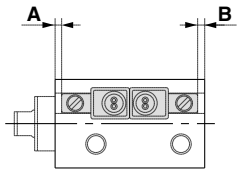

D-M9□/M9□W

• When detecting extended stroke end

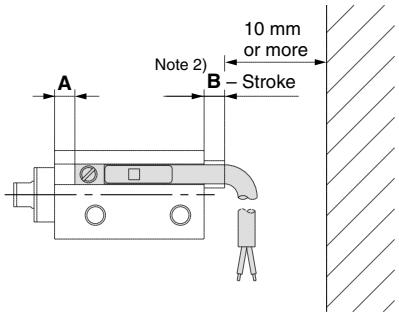

• When detecting retracted stroke end

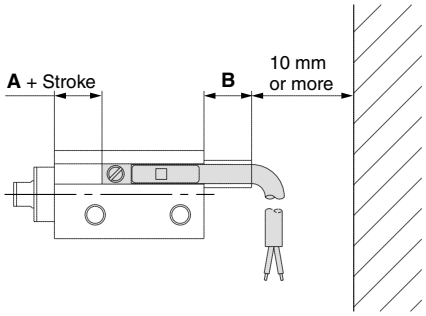

Bore size (mm)	D-F8□				D-M9□/M9□W			
	Double acting		Single acting		Double acting		Single acting	
	A	B	A	B	A	B	A	B
6	1	1	1	1	3	7	3	7
8								
10								
12	2	1	3.5	1	4	7	5.5	7
16	3	1	3	1	5	6.5	5	6.5
20	5	2	5	2	7	6	7	6

Note 1) Solid state switch D-M9□/M9□W: with 1 pc.
Note 2) Provide a clearance of 10 mm or more in addition to the above dimensions to prevent the lead wire interference.
Note 3) Adjust the mounting position after confirming the auto switch operation.

Auto Switch Mounting

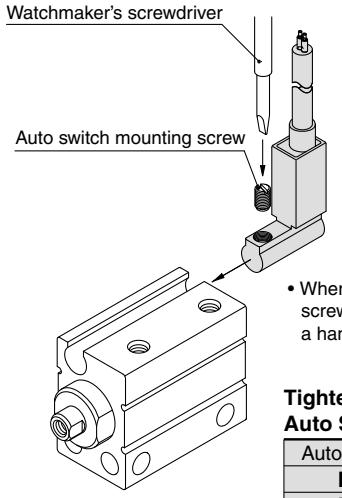

• When tightening an auto switch mounting screw, use a watchmaker's screwdriver with a handle of approx. 5 to 6 mm in diameter.

Tightening Torque for Auto Switch Mounting Screw (N·m)

Auto switch model	Tightening torque
D-F8□	0.10 to 0.20
D-M9□ D-M9□W	0.05 to 0.15

Operating Range

(mm)

Auto switch model	Applicable bore size					
	6	8	10	12	16	20
D-F8□	2	2.5	2.5	3	4	4
D-M9□	2	2.5	2.5	2	3	3
D-M9□W	3	3.5	3.5	4	4	5

∗ This is a guideline including hysteresis, not meant to be guaranteed. (assuming approx. ±30% dispersion)
This will vary substantially depending on the ambient environment.

Caution on Proximity Installation

1. When cylinders with auto switches are adjacent to one another as shown in the figure below, provide a space between them of at least, the amount shown in the tables below.
If the space is not sufficient, the magnets in adjacent cylinders may cause the auto switches to malfunction.

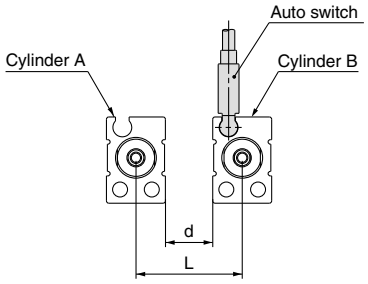

Without Shielding Plate

Bore	ø6	ø8	ø10	ø12	ø16	ø20
L	19	19	19.5	21	25	29
d	6	6	6	4	4	4

With Shielding Plate

Bore	ø6	ø8	ø10	ø12	ø16	ø20
L	16	13.5	14	18	22	26
d	3	0.5	0.5	1	1	1

∗ The space can be reduced by attaching a shielding plate (steel plate 0.2 to 0.3 mm thick) to the side of the cylinder. In the case of a ø6 bore size, be sure to attach the shielding plate on Cylinder A (on the surface opposite to the switch groove).

Shown below is the dimensions of the separately sold shielding plate (MU-S025) for reference.

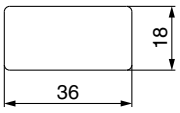

Material: Ferritic stainless steel, thickness: 0.3 mm
Possible to attach this on the cylinder since the reverse side is treated with glue.

2. In the case of ø6 bore size cylinders with auto switches, keep the auto switch groove side surface at least 2.5 mm away from a magnetic substance.
If a magnetic material gets closer within 2.5 mm, the auto switches may malfunction due to a drop in magnetic force.
∗ If this surface is to be used for mounting, a spacer composed of a non-magnetic substance (aluminum, etc.) is required as shown in the figure below.

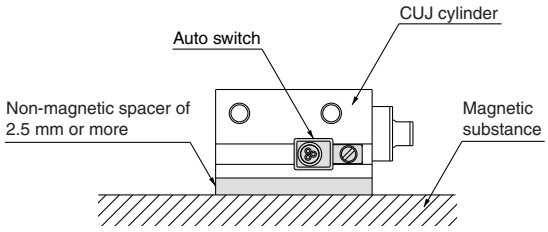

Series CUJ
Auto Switch Specifications

Auto Switch Common Specifications

Type	Solid state switch
Leakage current	3-wire: 100 μA or less 2-wire: 0.8 mA or less
Operating time	1 ms or less
Impact resistance	1000 m/s^2
Insulation resistance	50 MΩ or more at 500 VDC Mega (between lead wire and case)
Withstand voltage	1000 VAC for 1 minute (between lead wire and case)
Ambient temperature	–10 to 60°C
Enclosure	IEC60529 standard IP67
Standard	Conforming to CE Standards

Lead Wire Length

Lead wire length indication

(Example) D-M9BW L

Lead wire length

Nil	0.5 m
M Note)	1 m
L	3 m
Z	5 m

Note) 1 m (M): D-M9□W only

Solid state switch
Oilproof flexible heavy-duty cable indication

To designate solid state switches with flexible specifications, add "-61" after the lead wire length.

∗ Oilproof flexible heavy-duty cable is used for D-M9□ and D-M9□W as standard. There is no need to add the suffix -61 to the end of part number.

(Example) D-F8NL- 61

Flexible specification

Auto Switch Hysteresis

The hysteresis is the difference between the position of the auto switch as it turns "on" and as it turns "off". A part of operating range (one side) includes this hysteresis.

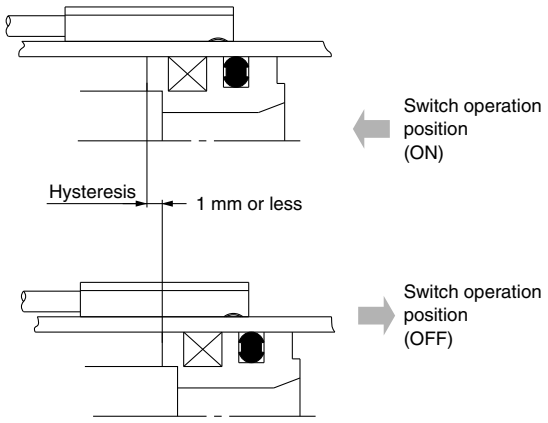

Note) Hysteresis may fluctuate depending on the operating environment. Contact SMC if hysteresis causes an operational problem.

Auto Switch Connections and Examples

Basic Wiring

Solid state 3-wire, NPN

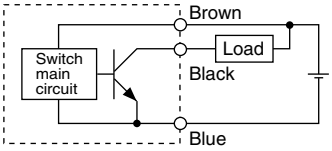

(Power supplies for switch and load are separate.)

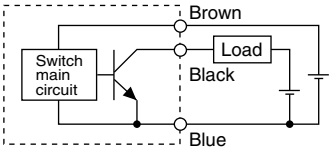

Solid state 3-wire, PNP

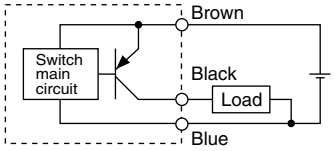

Solid state 2-wire

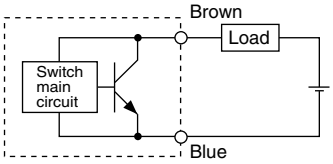

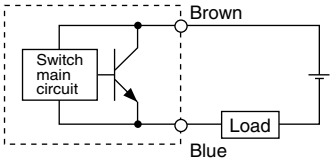

Examples of Connection to PLC (Programmable Logic Controller)

• Sink input specifications
3-wire, NPN

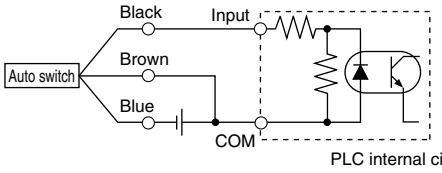

2-wire

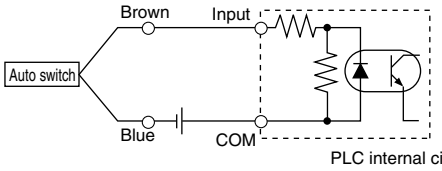

• Source input specifications
3-wire, PNP

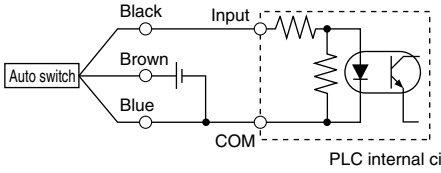

2-wire

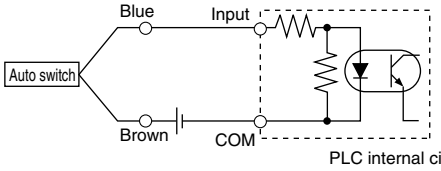

Connect according to the applicable PLC input specifications, since the connection method will vary depending on the PLC input specifications.

Examples of AND (Serial) and OR (Parallel) Connection

• 3-wire

AND connection for NPN output (using relays)

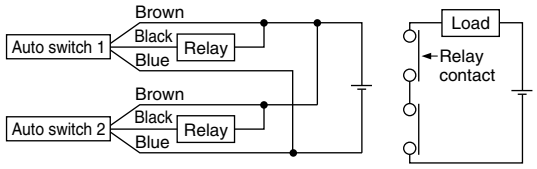

AND connection for NPN output (performed with switches only)

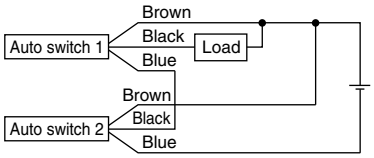

The indicator lights will light up when both auto switches are turned ON.

OR connection for NPN output

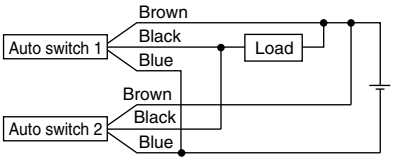

2-wire with 2-switch AND connection

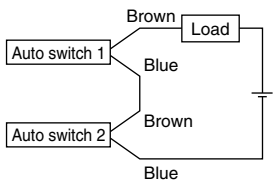

When two auto switches are connected in series, a load may malfunction because the load voltage will decline when in the ON state.
The indicator lights will light up if both of the auto switches are in the ON state.

Load voltage at ON = (Power supply voltage − Internal voltage drop) x 2 pcs.
= 24 V - 4 V x 2 pcs.
= 16 V

Example: Power supply is 24 VDC.
Internal voltage drop in auto switch is 4 V.

2-wire with 2-switch OR connection

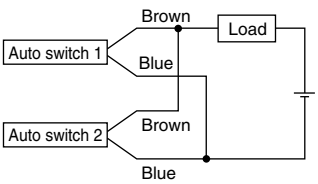

(Solid state swich)
When two auto switches are connected in parallel, a malfunction may occur because the load voltage will increase when in the OFF state.

Load voltage at OFF = Leakage current x 2 pcs.
x Load impedance
= 1 mA x 2 pcs. x 3 kΩ
= 6 V

Example: Load impedance is 3 kΩ.
Leakage current from auto switch is 1 mA.

Solid State Switch: Direct Mounting Style
D-M9N/D-M9P/D-M9B

CE

Grommet

- **2-wire load current is reduced (2.5 to 40 mA).**
- **Flexibility is 1.5 times greater than the conventional model (SMC comparison).**
- **Using flexible cable as standard spec.**



⚠Caution

Operating Precautions

Fix the switch with the existing screw installed on the switch body. The auto switch may be damaged if an unspecified screw is used.

Auto Switch Internal Circuit

D-M9N

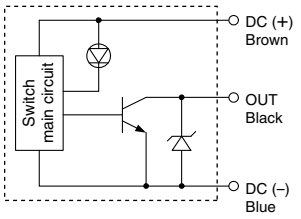

D-M9P

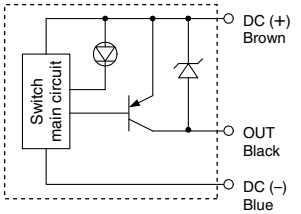

D-M9B

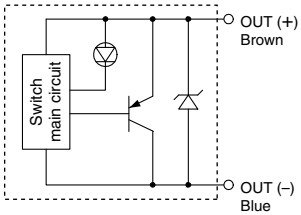

Auto Switch Specifications

PLC: Programmable Logic Controller

D-M9□ (With indicator light)			
Auto switch part no.	**D-M9N**	**D-M9P**	**D-M9B**
Electrical entry direction	In-line	In-line	In-line
Wiring type	3-wire		2-wire
Output type	NPN	PNP	—
Applicable load	IC circuit, Relay, PLC		24 VDC relay, PLC
Power supply voltage	5, 12, 24 VDC (4.5 to 28 V)		—
Current consumption	10 mA or less		—
Load voltage	28 VDC or less	—	24 VDC (10 to 28 VDC)
Load current	40 mA or less		2.5 to 40 mA
Internal voltage drop	0.8 V or less		4 V or less
Leakage current	100 μA or less at 24 VDC		0.8 mA or less
Indicator light	Red LED illuminates when turned ON.		
Standard	Conforming to CE Standards		

- Lead wires
  Oilproof heavy-duty vinyl cable: ø2.7 x 3.2 ellipse
  D-M9B 0.15 mm² x 2 cores
  D-M9N, D-M9P 0.15 mm² x 3 cores

Note 1) Refer to page 19 for solid state switch common specifications.
Note 2) Refer to page 19 for lead wire lengths.

Mass

Unit: g

Auto switch model		D-M9N	D-M9P	D-M9B
Lead wire length (m)	0.5	8	8	7
	3	41	41	38
	5	68	68	63

Dimensions

Unit: mm

D-M9□

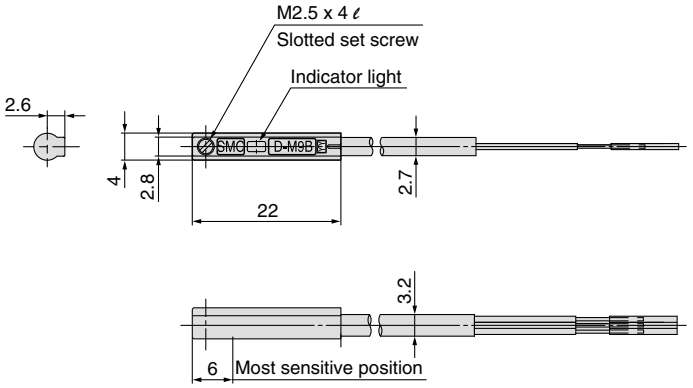

SMC

2-Color Indication Solid State Switch: Direct Mounting Style
D-M9NW/D-M9PW/D-M9BW

Grommet

- **2-wire load current is reduced (2.5 to 40 mA)**
- **Flexibility is 1.5 times greater than the conventional model (SMC comparison).**
- **Using flexible cable as standard spec.**
- **The optimum operating position can be determined by the color of the light. (Red → Green ← Red)**



⚠Caution

Operating Precautions

Fix the switch with the existing screw installed on the switch body. The auto switch may be damaged if an unspecified screw is used.

Auto Switch Internal Circuit

D-M9NW

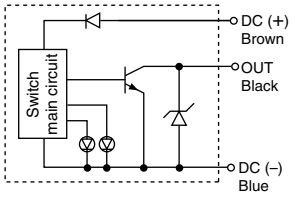

D-M9PW

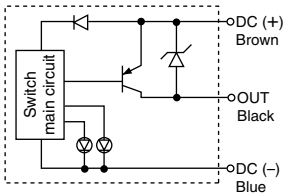

D-M9BW

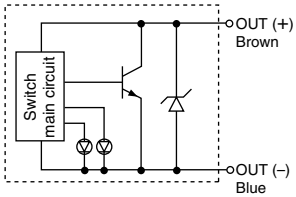

Indicator light / Display method

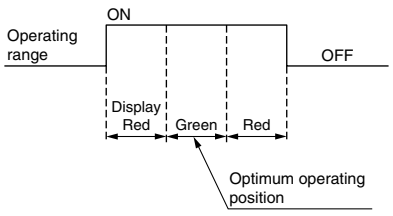

Auto Switch Specifications

PLC: Programmable Logic Controller

D-M9□W (With indicator light)			
Auto switch part no.	D-M9NW	D-M9PW	D-M9BW
Electrical entry direction	In-line	In-line	In-line
Wiring type	3-wire		2-wire
Output type	NPN	PNP	—
Applicable load	IC circuit, Relay, PLC		24 VDC relay, PLC
Power supply voltage	5, 12, 24 VDC (4.5 to 28 V)		—
Current consumption	10 mA or less		—
Load voltage	28 VDC or less	—	24 VDC (10 to 28 VDC)
Load current	40 mA or less		2.5 to 40 mA
Internal voltage drop	0.8 V or less at 10 mA (2 V or less at 40 mA)		4 V or less
Leakage current	100 μA or less at 24 VDC		0.8 mA or less
Indicator light	Operating position ····· Red LED illuminates. Optimum operating position ····· Green LED illuminates.		
Standard	Conforming to CE Standards		

- Lead wires
  Oilproof heavy-duty vinyl cable: ø2.7 x 3.2 ellipse
  D-M9BW 0.15 mm² x 2 cores
  D-M9NW, D-M9PW 0.15 mm² x 3 cores

Note 1) Refer to page 19 for solid state switch common specifications.
Note 2) Refer to page 19 for lead wire lengths.

Mass

Unit: g

Auto switch part no.		D-M9NW	D-M9PW	D-M9BW
Lead wire length (m)	0.5	8	8	7
	1	14	14	13
	3	41	41	38
	5	68	68	63

Dimensions

Unit: mm

D-M9□W

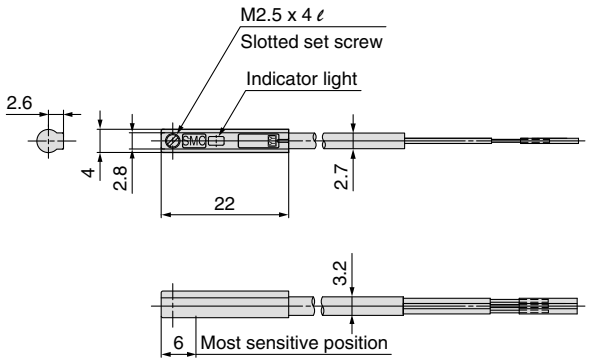

Solid State Switch: Direct Mounting Style
D-F8N/D-F8P/D-F8B

Grommet



⚠Caution

Operating Precautions

Fix the switch with the existing screw installed on the switch body. The auto switch may be damaged if an unspecified screw is used.

Auto Switch Internal Circuit

D-F8N

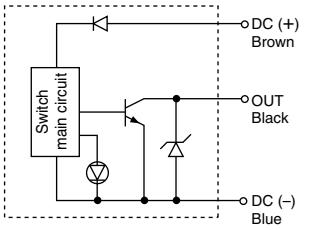

D-F8P

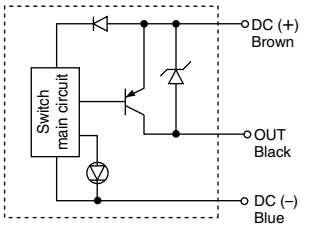

D-F8B

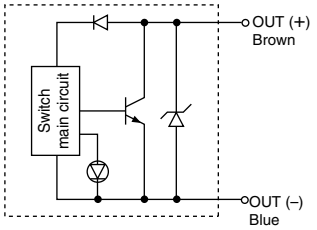

Auto Switch Specifications

PLC: Programmable Logic Controller

D-F8□ (With indicator light)			
Auto switch part no.	**D-F8N**	**D-F8P**	**D-F8B**
Electrical entry direction	Perpendicular	Perpendicular	Perpendicular
Wiring type	3-wire		2-wire
Output type	NPN	PNP	—
Applicable load	IC circuit, 24 VDC relay, PLC		24 VDC relay, PLC
Power supply voltage	5, 12, 24 VDC (4.5 to 28 VDC)		—
Current consumption	10 mA or less		—
Load voltage	28 VDC or less	—	24 VDC (10 to 28 VDC)
Load current	40 mA or less	80 mA or less	2.5 to 40 mA
Internal voltage drop	1.5 V or less (0.8 V or less at 10 mA load current)	0.8 V or less	4 V or less
Leakage current	100 μA or less at 24 VDC		0.8 mA or less at 24 VDC
Indicator light	Red LED illuminates when turned ON.		
Standard	Conforming to CE Standards		

● Lead wires
Oilproof heavy-duty vinyl cable: ø2.7, 0.5 m
D-F8N, D-F8P 0.15 mm² x 3 cores (Brown, Black, Blue)
D-F8B 0.18 mm² x 2 cores (Brown, Blue)

Note 1) Refer to page 19 for solid state switch common specifications.
Note 2) Refer to page 19 for lead wire lengths.

Mass

Unit: g

Auto switch model		D-F8N	D-F8P	D-F8B
Lead wire length (m)	0.5	7	7	7
	3	32	32	32
	5	52	52	52

Dimensions

Unit: mm

D-F8□

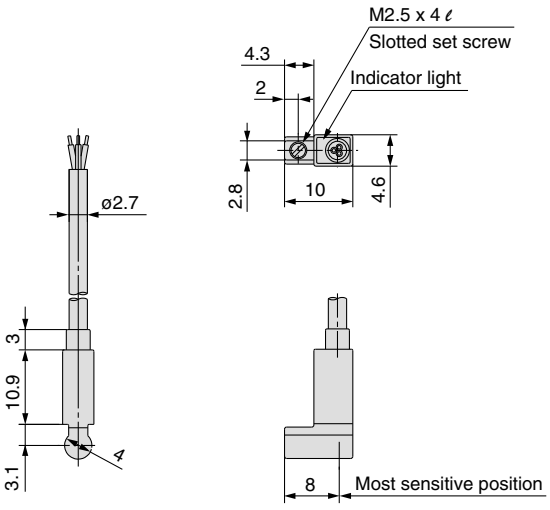

Made to Order

Please contact SMC for detailed dimensions and specifications.

Heat Resistant Cylinder (–10 to 150°C) -XB6

Air cylinder which changed the seal material and grease, so that it could be used even at higher temperature up to 150°C from –10°C.

How to Order

CUJ series standard model no. — **XB6**

XB6: Heat resistant cylinder

Note 1) Be sure to use a non-lubricating air supply.
Note 2) Contact SMC for details on the maintenance intervals for this cylinder, which differs from those of the standard cylinder.
Note 3) In principle, it is impossible to make built-in magnet type and/or with auto switch.

Specifications

Applicable series	CUJ
Bore size	ø4, ø6, ø8, ø10
Ambient temperature range	–10°C to 150°C
Seals material	Fluororubber
Grease	Heat resistant grease (GR-F-005)
Specifications other than above and external dimensions	Same as standard type.

⚠ Warning

Precautions

Be aware that smoking cigarettes, etc. after your hands have come into contact with the grease used in this cylinder can create a gas that is hazardous to humans.

Safety Instructions

These safety instructions are intended to prevent hazardous situations and/or equipment damage. These instructions indicate the level of potential hazard with the labels of **"Caution," "Warning"** or **"Danger."** They are all important notes for safety and must be followed in addition to International Standards (ISO/IEC), Japan Industrial Standards (JIS)*1) and other safety regulations*2).

* 1) ISO 4414: Pneumatic fluid power – General rules relating to systems.
ISO 4413: Hydraulic fluid power – General rules relating to systems.
IEC 60204-1: Safety of machinery – Electrical equipment of machines. (Part 1: General requirements)
ISO 10218-1992: Manipulating industrial robots -Safety.
JIS B 8370: General rules for pneumatic equipment.
JIS B 8361: General rules for hydraulic equipment.
JIS B 9960-1: Safety of machinery – Electrical equipment of machines. (Part 1: General requirements)
JIS B 8433-1993: Manipulating industrial robots - Safety.
etc.
* 2) Labor Safety and Sanitation Law, etc.

⚠ Caution: Operator error could result in injury or equipment damage.

⚠ Warning: Operator error could result in serious injury or loss of life.

⚠ Danger : In extreme conditions, there is a possibility of serious injury or loss of life.

⚠ Warning

1. The compatibility of the product is the responsibility of the person who designs the equipment or decides its specifications.

Since the product specified here is used under various operating conditions, its compatibility with specific equipment must be decided by the person who designs the equipment or decides its specifications based on necessary analysis and test results. The expected performance and safety assurance of the equipment will be the responsibility of the person who has determined its compatibility with the product. This person should also continuously review all specifications of the product referring to its latest catalog information, with a view to giving due consideration to any possibility of equipment failure when configuring the equipment.

2. Only personnel with appropriate training should operate machinery and equipment.

The product specified here may become unsafe if handled incorrectly. The assembly, operation and maintenance of machines or equipment including our products must be performed by an operator who is appropriately trained and experienced.

3. Do not service or attempt to remove product and machinery/equipment until safety is confirmed.

1. The inspection and maintenance of machinery/equipment should only be performed after measures to prevent falling or runaway of the driven objects have been confirmed.
2. When the product is to be removed, confirm that the safety measures as mentioned above are implemented and the power from any appropriate source is cut, and read and understand the specific product precautions of all relevant products carefully.
3. Before machinery/equipment is restarted, take measures to prevent unexpected operation and malfunction.

4. Contact SMC beforehand and take special consideration of safety measures if the product is to be used in any of the following conditions.

1. Conditions and environments outside of the given specifications, or use outdoors or in a place exposed to direct sunlight.
2. Installation on equipment in conjunction with atomic energy, railways, air navigation, space, shipping, vehicles, military, medical treatment, combustion and recreation, or equipment in contact with food and beverages, emergency stop circuits, clutch and brake circuits in press applications, safety equipment or other applications unsuitable for the standard specifications described in the product catalog.
3. An application which could have negative effects on people, property, or animals requiring special safety analysis.
4. Use in an interlock circuit, which requires the provision of double interlock for possible failure by using a mechanical protective function, and periodical checks to confirm proper operation.

Safety Instructions

⚠Caution

The product is provided for use in manufacturing industries.
The product herein described is basically provided for peaceful use in manufacturing industries.
If considering using the product in other industries, consult SMC beforehand and exchange specifications or a contract if necessary. If anything is unclear, contact your nearest sales branch.

Limited Warranty and Disclaimer/Compliance Requirements

The product used is subject to the following “Limited Warranty and Disclaimer” and “Compliance Requirements”. Read and accept them before using the product.

Limited Warranty and Disclaimer

1. **The warranty period of the product is 1 year in service or 1.5 years after the product is delivered.**＊**3)**
   Also, the product may have specified durability, running distance or replacement parts. Please consult your nearest sales branch.
2. **For any failure or damage reported within the warranty period which is clearly our responsibility, a replacement product or necessary parts will be provided.**
   This limited warranty applies only to our product independently, and not to any other damage incurred due to the failure of the product.
3. **Prior to using SMC products, please read and understand the warranty terms and disclaimers noted in the specified catalog for the particular products.**

＊ **3) Vacuum pads are excluded from this 1 year warranty.**
A vacuum pad is a consumable part, so it is warranted for a year after it is delivered.
Also, even within the warranty period, the wear of a product due to the use of the vacuum pad or failure due to the deterioration of rubber material are not covered by the limited warranty.

Compliance Requirements

When the product is exported, strictly follow the laws required by the Ministry of Economy, Trade and Industry (Foreign Exchange and Foreign Trade Control Law).

Auto Switches Precautions 1

Be sure to read this before handling.

Design and Selection

⚠Warning

1. Check the specifications.

Read the specifications carefully and use this product appropriately. The product may be damaged or malfunction if it is used outside the specification range of load current, voltage, temperature or impact.

SMC will not, under any circumstances, assume responsibility for damage incurred when used outside the specification range.

2. Cautions for use in an interlock circuit

When an auto switch is used for an interlock signal requiring high reliability, devise a double interlock system to avoid trouble by providing a mechanical protection function, or by also using another switch (sensor) together with the auto switch.

Also, perform periodic maintenance inspections and confirm proper operation.

3. Do not disassemble the product or make any modifications, including additional machining.

It may cause human injury and/or an accident.

⚠Caution

1. Use caution regarding the length of time that an auto switch is ON at an intermediate stroke position.

When an auto switch is placed at an intermediate position of the stroke and a load is driven at the time the piston passes, the auto switch will operate, but if the speed is too great, the operating time will be shortened and the load may not operate properly. The maximum detectable piston speed is:

$$V\ (mm/s) = \frac{\text{Auto switch operating range (mm)}}{\text{Load operating time (ms)}} \times 1000$$

⚠Caution

2. Wiring should be kept as short as possible.

Although the wire length should not affect the function of the switch, use a wire length of 100 m or less.

Even when the length is 100 m or less, the longer the wire is, the greater the possibility of influence from external noise.

To deal with noise when the wire length is long, we recommend installation of a ferrite core at either end of the lead wire.

Due to the nature of their construction, contact protection boxes are not required for solid state auto switches.

3. Do not use a load that generates surge voltage. If a surge voltage is generated, the discharge occurs at the contact, possibly resulting in the shortening of product life.

When a load such as a relay which generates surge is driven, use a switch with a built-in surge absorbing element.

4. Use caution when multiple cylinders/actuators are used close to each other.

When two or more cylinders/actuators with auto switches are lined up in close proximity to each other, magnetic field interference may cause the switches to malfunction. Maintain a minimum cylinder/actuator separation of 40 mm. (When an allowable interval is specified for each cylinder and actuator series, use the indicated value.)

By using a magnetic shielding plate (MU-S025) or commercially available magnetic shielding tape, it may be possible to reduce the interference caused by magnetism.

5. Mount a switch at the center of the operating range.

Adjust the mounting position of an auto switch so that the piston stops at the center of the operating range (the range in which a switch is ON). (The mounting positions shown in the catalog indicate the optimum position at the stroke end.) If mounted at the end of the operating range (around the borderline of ON and OFF), the operation will be unstable, and the life of reed switches may be shortened.

Auto Switches Precautions 2

Be sure to read this before handling.

Design and Selection

⚠Caution

6. Use caution regarding the internal voltage drop of a switch.

- If auto switches are connected in series as shown below, take note that there will be a large voltage drop because of internal resistance in the light-emitting diodes. (Refer to internal voltage drop in the auto switch specifications.)
  [The voltage drop will be “n” times larger when “n” auto switches are connected.]
  Even though an auto switch operates normally, the load may not operate.

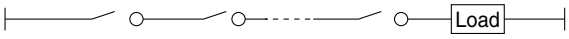

- Similarly, when operating below a specified voltage, it is possible that the load may be ineffective even though the auto switch function is normal. Therefore, the formula below should be satisfied after confirming the minimum operating voltage of the load.

$$\text{Supply voltage} - \text{Internal voltage drop of auto switch} > \text{Minimum operating voltage of load}$$

<2-wire>
Generally, the internal voltage drop will be greater, so use caution. Also, note that a 12 VDC relay is not applicable.

7. Use caution regarding the leakage current.

<2-wire>
With a 2-wire auto switch, current (leakage current) flows to the load to operate the internal circuit even when in the OFF state.

$$\text{Current to operate load (OFF condition)} > \text{Leakage current}$$

If the condition given in the above formula is not met, it will not reset correctly (stays ON). Use a 3-wire switch if this specification cannot be satisfied.
Moreover, leakage current flow to the load will be “n” times larger when “n” auto switches are connected in parallel.

8. Ensure sufficient space for maintenance activities.

When designing an application, be sure to allow sufficient space for maintenance and inspection.

9. Use caution when mounting multiple units.

When the number of auto switches mounted is “n”, this represents the number of auto switches that can physically be mounted with the cylinder/actuator.
As the detection interval in this situation is determined by the mounting construction of the auto switch and the housing dimensions, it may not always be possible to mount the switches at the desired interval and/or setting position.

10. Limitations on possible detection positions

Depending on the mounting hardware of the cylinder/actuator, physical interference may make it impossible to mount the auto switch in some positions or on some surfaces (lower surface of foot bracket, etc.)
For the auto switch mounting position, check carefully to ensure there is no interference with the cylinder/actuator mounting bracket (trunnion, reinforcing ring etc.).

11. Use the proper combinations.

The auto switch is adjusted so as to operate properly when used with SMC cylinders/actuators.
Take note that improper mounting, mechanical changes in mounting conditions, and use of cylinders/actuators not made by SMC may result in malfunction.

Mounting and Adjustment

⚠Caution

1. Do not drop or bump.

Do not drop, bump, or apply excessive impacts (1000 m/s^2 or more while handling. Although the body of the auto switch may not be damaged, the inside of the auto switch could be damaged and cause a malfunction.

2. Mount auto switches using the proper tightening torque.

When a switch is tightened beyond the fastening torque range, the mounting screws, auto switch mounting brackets or auto switch may be damaged.
On the other hand, tightening below the fastening torque range may allow the auto switch to slip out of position.

3. Do not carry a cylinder/actuator by the auto switch lead wires.

Never carry a cylinder/actuator by its lead wires. This may not only cause broken lead wires, but it may cause internal elements of the auto switch to be damaged by the stress.

4. Do not mount the auto switch to the main body with anything other than the included set screw. Using screws other than those indicated may cause damage to the auto switch.

Auto Switches Precautions 3

Be sure to read this before handling.

Wiring

⚠Caution

1. Confirm proper insulation of wiring.

Be certain that there is no faulty wiring insulation (contact with other circuits, ground fault, improper insulation between terminals, etc.). Damage may occur due to excess current flow to a switch.

2. Do not wire together with power lines and/or high voltage lines.

Avoid wiring in parallel with power lines and/or high voltage lines or using inside the same wire tubing. Wire separately, otherwise control circuits including auto switches can mulfuction due to noise.

3. Avoid repeatedly bending or stretching the lead wires.

Broken lead wires will result from repeatedly applying bending stress or stretching force to the lead wires.
Stress and tensile force applied to the connection between the cable and auto switch increases the possibility of disconnection.
Fix the cable in the middle so that it is not movable in the area where it connects with the auto switch.

4. Be sure to connect the load before power is applied.

<2-wire>
If the power is turned on when an auto switch is not connected to a load, the switch will be instantly damaged because of excess current.
It is the same as when the 2-wire brown cord (+, output) is directly connected to the (+) power supply terminal.

5. Do not allow short-circuiting of loads.

All D-M9□ and PNP output switch models do not have a built-in short circuit prevention circuit. If a load is short circuited, the auto switch will be instantly damaged.
Use caution to avoid reverse wiring with the brown power supply line and the black output line on 3-wire switches.

6. Avoid incorrect wiring.

1) If connections are reversed on a 2-wire auto switch, the auto switch will not be damaged by a protection circuit, but the auto switch will always stay in an ON state. However, it is still necessary to avoid reversed connections, since the auto switch could be damaged by a load short circuit in this condition.
2) If connections are reversed (power supply line (+) and power supply line (–)) on a 3-wire switch, the switch will be protected by a protection circuit. However, if the power supply line (+) is connected to the blue wire and the power supply line (–) is connected to the black wire, the auto switch will be damaged.

7. When the cable sheath is stripped, confirm the stripping direction. The insulator may be split or damaged depending on the direction. (D-M9□ only)

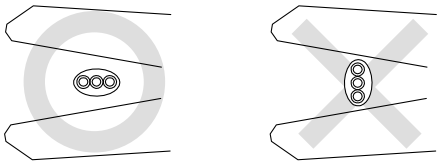

Recommended Tool

Description	Model no.
Wire stripper	D-M9N-SWY

∗ Stripper for a round cable (ø2.0) can be used for a 2-wire cable.

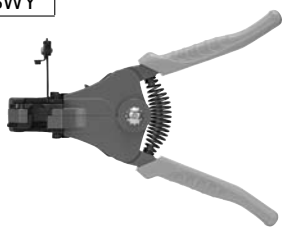

Auto Switches Precautions 4

Be sure to read this before handling.

Operating Environment

⚠Warning

1. Never use in the presence of explosive gases.

The construction of our auto switches does not make them explosion-proof. Never use them in the presence of an explosive gas, as this may cause a serious explosion.
Consult SMC for ATEX directive products.

⚠Caution

1. Do not use in an area where a magnetic field is generated.

Auto switches will malfunction or magnets inside cylinders/actuators will become demagnetized.

2. Do not use in environments where the auto switches are under water or constantly exposed to water.

Although switches satisfy the IEC standard IP67 structure, do not use switches in applications where it will be continually exposed to water splash or spray. Poor insulation or swelling of the potting resin inside the switches may cause a malfunction.

3. Do not use in environments with oil or chemicals.

Consult with SMC if auto switches will be used in an environment with coolants, cleaning solvents, various oils or chemicals. If auto switches are used under these conditions for even a short period of time, they may be adversely affected by improper insulation, a malfunction due to swelling of the potting resin, or hardening of the lead wires.

4. Do not use in an environment with temperature cycles.

Consult with SMC if switches are to be used where there are temperature cycles other than normal temperature changes, as they may be adversely affected internally.

5. Do not use in locations where surges are generated.

When there are units (solenoid type lifters, high frequency induction furnaces, motors, radio equipment, etc.) which generate a large amount of surge or electromagnetic waves in the area around cylinders/actuators with solid state auto switches, this may cause deterioration or damage to the switches. Avoid sources of surge generation and crossed lines.

⚠Caution

6. Avoid accumulation of iron debris or close contact with magnetic substances.

When a large amount of ferrous debris such as machining chips or spatter is accumulated, or a magnetic substance (something attracted by a magnet) is brought into close proximity to the cylinder/actuator with an auto switch, it may cause the auto switches to malfunction due to a loss of the magnetic force inside the cylinder.

7. Consult with SMC concerning water resistance, elasticity of lead wires, and use at welding sites.

8. Do not use in direct sunlight.

9. Do not mount the product in locations where it is exposed to radiant heat.

Maintenance

⚠Warning

1. Removal of equipment, and supply/exhaust of compressed air

Before any machinery or equipment is removed, first ensure that the appropriate measures are in place to prevent the fall or erratic movement of driven objects and equipment, then cut off the electric power and reduce the pressure in the system to zero. Only then should you proceed with the removal of any machinery and equipment.
When machinery is restarted, proceed with caution after confirming that appropriate measures are in place to prevent cylinders/actuators from sudden movement.

⚠Caution

1. Perform the following maintenance periodically in order to prevent possible danger due to unexpected auto switch malfunction.

1) Securely tighten switch mounting screws.
If screws become loose or the mounting position is dislocated, retighten screws securely after readjusting the mounting position.

2) Confirm that there is no damage to lead wires.
To prevent faulty insulation, replace switches or repair lead wires if damage is discovered.

3) Checking the green light-up of 2-color indication auto switches
Confirm that the green LED light turns on and operation stops where it is set. If the red LED light turns on and operation stops, the mounting position is incorrect. Re-install in a new position so that the green LED lights up.

Series CUJ
Specific Product Precautions 1

Be sure to read this before handling. Refer to the back of pages 1 and 2 for Safety Instructions, the back of pages 3 through to 6 for Auto Switches Precautions, and "Pneumatics for Handling Pneumatic Devices" (M-03-E3A) for Actuators Precautions.

Design

⚠ Warning

Do not use an exhaust center.
If its use cannot be avoided, use an lurching-prevention circuit, or consult SMC.

Mounting

⚠ Caution

1. When mounting a mini free mount cylinder, tighten the bolts with the proper tightening torque.

Applicable bore size (mm)	Bolt	Proper tightening torque (N·m)*
4	M2.5 x 0.45	0.54 ±20% (0.432 to 0.648)
6	M3 x 0.5	1.06 ±20% (0.848 to 1.272)
8		
10		
12	M4 x 0.7	3.27 ±20% (2.61 to 3.92)
16		
20	M5 x 0.8	6.6 ±20% (5.28 to 7.92)

* Torque coefficient: 0.2

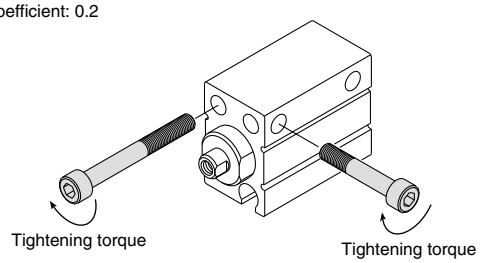

2. Mounting the bolt from the rod side with a ø12 to ø20 lateral mounting body may result in interference with the workpiece. Use an axial mounting body.

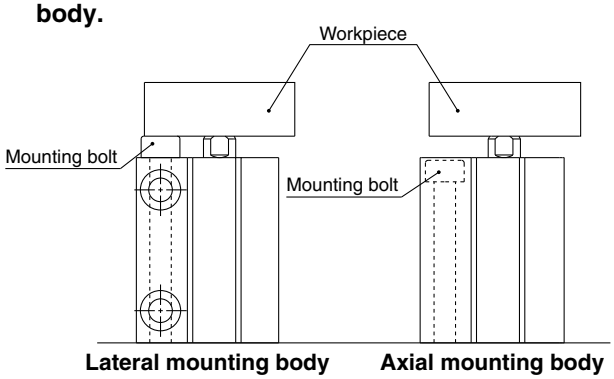

3. Use caution especially when multiple cylinders are used in pararell such as stacking because the dimensions of the body's width have plus tolerances. Contact us for information on a product with body width dimensions having different tolerances. (ø4, ø6, ø8, ø10 only)

4. If the cylinder's mounting surface is not sufficiently flat, it may result in malfunction. We recommend that the cylinder's mounting surface flatness should be 1/100 mm or less.

Allowable Kinetic Energy

⚠ Caution

When driving an inertial load, operate a cylinder with kinetic energy within the allowable value. The range in the chart below that is delineated by bold solid lines indicates the relationship between load mass and maximum driving speeds.

Bore size (mm)	4	6	8	10	12	16	20
Piston speed (m/s)	0.05 to 0.5						
Allowable kinetic energy (J)	3.8×10^{-3}	6.25×10^{-3}	9.35×10^{-3}	12.5×10^{-3}	0.030	0.053	0.077

(Supply pressure: P = 0.5 MPa)

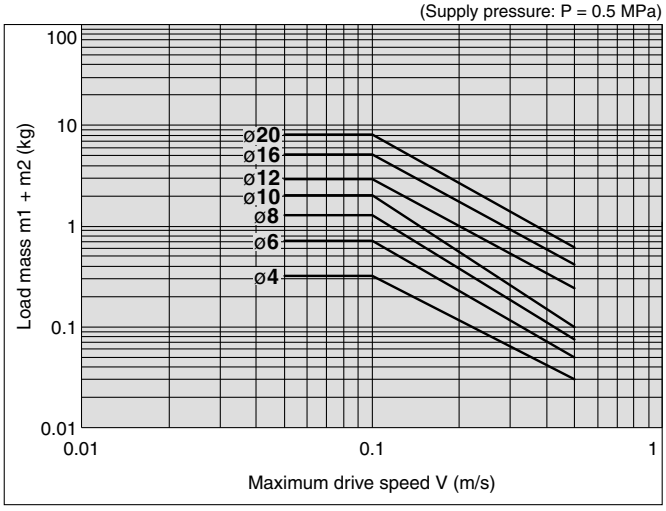

[Condition]

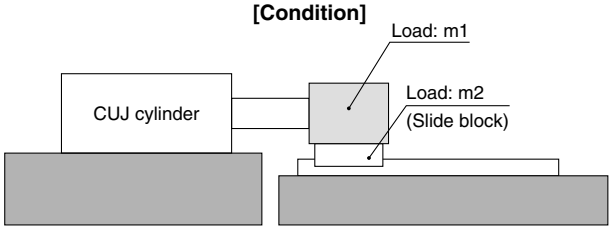

Single Acting Cylinders

⚠ Caution

1. Do not move the load with the thrust (spring reaction force) on the cylinder retracting side. Otherwise, it will cause poor stroke or malfunction.

2. Do not remove the element or plug.

Back page 7

Series CUJ
Specific Product Precautions 2

Be sure to read this before handling. Refer to the back of pages 1 and 2 for Safety Instructions, the back of pages 3 through to 6 for Auto Switches Precautions, and "Pneumatics for Handling Pneumatic Devices" (M-03-E3A) for Actuators Precautions.

Selection

Strictly observe the limiting range of lateral load on a piston rod. (Refer to the graphs below.) If this product is used beyond the limits, it may shorten the machine life or cause damage.

Double Acting, Female Threaded, Without Magnet (Without Auto Switch)

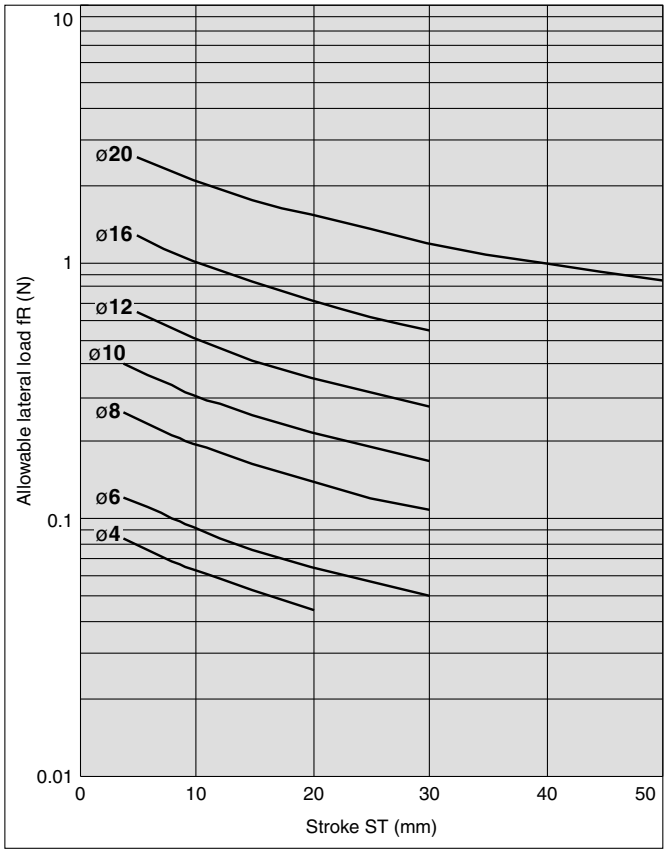

Double Acting, Female Threaded, With Magnet (With Auto Switch)

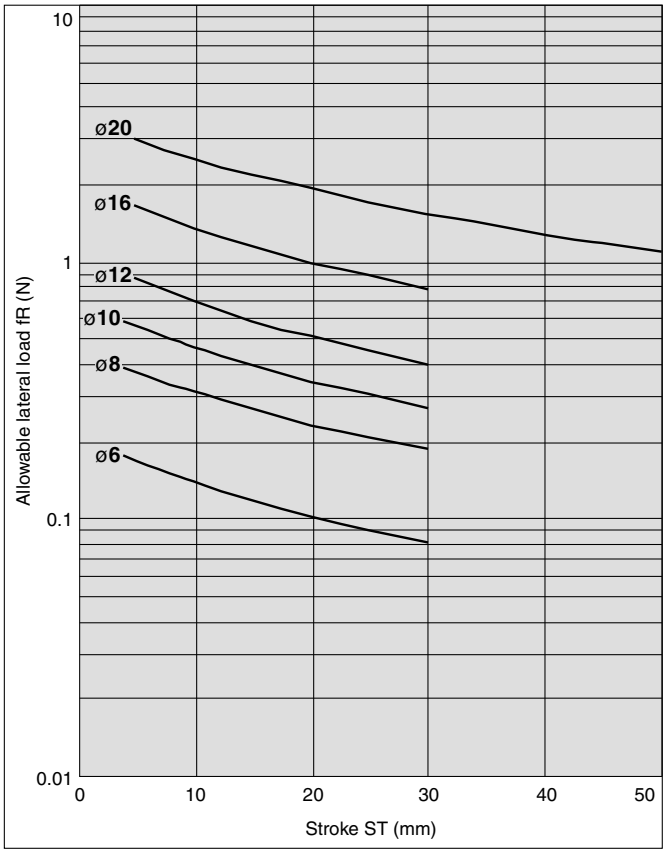

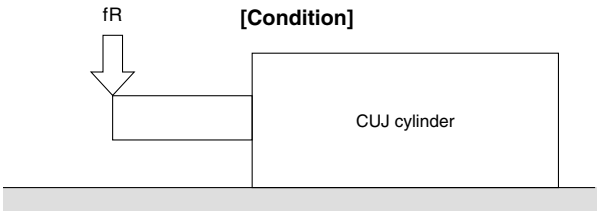

⚠ Caution

Adjust the cylinder drive speed by installing a speed controller, beginning at a low speed and gradually adjusting to the specified speed.

Lubrication

⚠ Caution

Lubrication to the non-lube type cylinders
Lubrication is not necessary since these cylinders are lubricated at the factory.
However, when you lubricate the cylinder, use synthetic oil (polyalphaolefin oil or equivalent). In that case, continue to lubricate the cylinder. Otherwise, loss of the initial lubricant may result in malfunction.

∗ Oil lubrication is not possible with the clean series.

Series CUJ
Specific Product Precautions 3

Be sure to read this before handling. Refer to the back of pages 1 and 2 for Safety Instructions, the back of pages 3 through to 6 for Auto Switches Precautions, and "Pneumatics for Handling Pneumatic Devices" (M-03-E3A) for Actuators Precautions.

Caution on Mounting Speed Controllers and Fittings

⚠ Caution

Since the cylinder port size of M3 x 0.5 (M5 x 0.8 for ø20 only) is used, use the cylinder series models listed below when connecting speed controllers and fittings directly to cylinders.

1. After manually tightening speed controllers and fittings, tighten approximately a quarter turn (a 1/6 turn for ø20 only) more using a tightening tool. In cases where there are gaskets in two places such as universal elbows, universal tees, etc., double the additional tightening to a half turn (a 1/3 turn for ø20 only). If screws are tightened excessively, air leakage may result due to broken threads or a deformed gasket. If screws are tightened insufficiently, looseness and accompanying air leakage are likely to occur.

<Speed Controllers>

With Magnet (With Auto Switch)

Bore size (mm)	6, 8, 10	12, 16	20
Port size	M3 x 0.5		M5 x 0.8
Stroke (mm)	4 or more	5 or more	5 or more
AS12□1F-M3-02	○	●	—
AS12□1F-M5-02	—	—	●
AS12□1F-M3-23	○	●	—
AS12□1F-M5-23	—	—	●
AS12□1F-M3-04	○	●	—
AS12□1F-M5-04	—	—	●
AS12□1F-M5-06	—	—	●
AS13□1F-M3-23	○	●	—
AS13□1F-M3-04	○	●	—
AS13□1F-M5-23	—	—	●
AS13□1F-M5-04	—	—	●
AS13□1F-M5-06	—	—	●

●: Applicable to mounting condition 1, 2, 3 and 4.
○: Applicable to mounting condition 1 and 3.

Without Magnet (Without Auto Switch)

Bore size (mm)	4, 6, 8, 10			12, 16	20
Port size	M3 x 0.5				M5 x 0.8
Stroke (mm)	4	6	8 or more	5 or more	5 or more
AS12□1F-M3-02	○	○	○	●	—
AS12□1F-M5-02	—	—	—	—	●
AS12□1F-M3-23	—	○	○	●	—
AS12□1F-M5-23	—	—	—	—	●
AS12□1F-M3-04	—	—	○	●	—
AS12□1F-M5-04	—	—	—	—	●
AS12□1F-M5-06	—	—	—	—	●
AS13□1F-M3-23	—	○	○	●	—
AS13□1F-M3-04	—	—	○	●	—
AS13□1F-M5-23	—	—	—	—	●
AS13□1F-M5-04	—	—	—	—	●
AS13□1F-M5-06	—	—	—	—	●

●: Applicable to mounting condition 1, 2, 3 and 4.
○: Applicable to mounting condition 1 and 3.

Fig. (1)

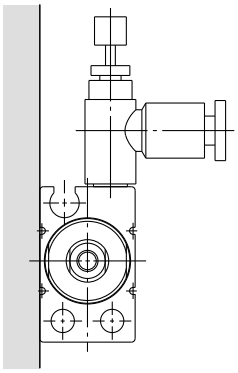

Mounting condition 1

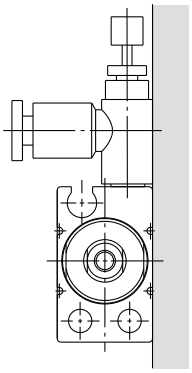

Mounting condition 2

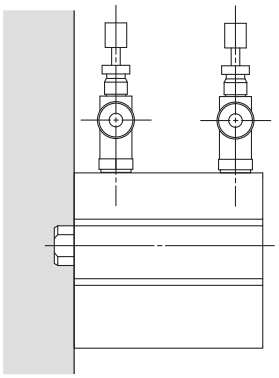

Mounting condition 3

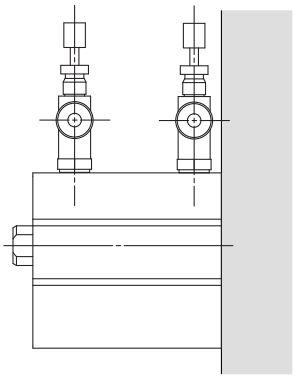

Mounting condition 4

Back page 9

Series CUJ
Specific Product Precautions 4

Be sure to read this before handling. Refer to the back of pages 1 and 2 for Safety Instructions, the back of pages 3 through to 6 for Auto Switches Precautions, and "Pneumatics for Handling Pneumatic Devices" (M-03-E3A) for Actuators Precautions.

Caution on Mounting Speed Controllers and Fittings

<One-touch Fittings and Hose Nipples>

With Magnet (With Auto Switch)

Bore size (mm)		6, 8, 10			12, 16	20	
Port size		M3 x 0.5				M5 x 0.8	
Stroke (mm)		4	6 or more	5 or more		5	10 or more
Male connector (with hexagon socket head)	KJS02-M3	●	●	●		—	—
	KJS23-M3	●	●	●		—	—
	KJS23-M5	—	—	—		●	●
	KJS04-M3	△	△	●		—	—
	KJS04-M5	—	—	—		●	●
	KJS06-M5	—	—	—		●	●
Male connector	KJH02-M3	●	●	●		—	—
	KJH02-M5	—	—	—		●	●
	KJH23-M3	△	△	●		—	—
	KJH23-M5	—	—	—		●	●
	KJH04-M3	△	△	△		—	—
	KJH04-M5	—	—	—		●	●
	KJH06-M5	—	—	—		△	△
Barb fitting	M-3AU-3&4	●	●	●		—	—
	M-3ALU-3&4	●	●	●		—	—
	M-5AU-3&4&6	—	—	—		●	●
	M-5ALU-3&4&6	—	—	—		●	●

●: Applicable to mounting condition 1, 2, 3 and 4.
○: Applicable to mounting condition 1, 2 and 3.
△: Applicable to mounting condition 1 and 3.
∗ During actual operation, use the speed control device circuit.

Without Magnet (Without Auto Switch)

Bore size (mm)		4		6, 8, 10		12, 16		20	
Port size		M3 x 0.5						M5 x 0.8	
Stroke (mm)		4	6 or more	4	6 or more	5	10 or more	5	10 or more
Male connector (with hexagon socket head)	KJS02-M3	●	●	●	●	●	●	—	—
	KJS23-M3	●	●	●	●	●	●	—	—
	KJS23-M5	—	—	—	—	—	—	●	●
	KJS04-M3	—	○	—	△	●	●	—	—
	KJS04-M5	—	—	—	—	—	—	●	●
	KJS06-M5	—	—	—	—	—	—	●	●
Male connector	KJH02-M3	●	●	●	●	●	●	—	—
	KJH02-M5	—	—	—	—	—	—	●	●
	KJH23-M3	—	○	—	△	●	●	—	—
	KJH23-M5	—	—	—	—	—	—	●	●
	KJH04-M3	—	○	—	△	—	△	—	—
	KJH04-M5	—	—	—	—	—	—	●	●
	KJH06-M5	—	—	—	—	—	—	—	△
Male elbow	KJL02-M3	●	●	●	●	●	●	—	—
	KJL02-M5	—	—	—	—	—	—	●	●
	KJL23-M3	—	○	—	△	●	●	—	—
	KJL23-M5	—	—	—	—	—	—	●	●
	KJL04-M3	—	○	—	△	●	●	—	—
	KJL04-M5	—	—	—	—	—	—	●	●
	KJL06-M5	—	—	—	—	—	—	●	●
Barb fitting	M-3AU-3&4	●	●	●	●	●	●	—	—
	M-5AU-3&4&6	—	—	—	—	—	—	●	●
	M-3ALU-3&4	●	●	●	●	●	●	—	—
	M-5ALU-3&4&6	—	—	—	—	—	—	●	●

●: Applicable to mounting condition 1, 2, 3 and 4.
○: Applicable to mounting condition 1, 2 and 3.
△: Applicable to mounting condition 1 and 3.
∗ During actual operation, use the speed control device circuit.

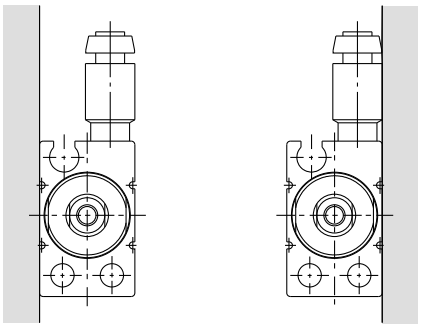

Mounting condition 1 **Mounting condition 2**

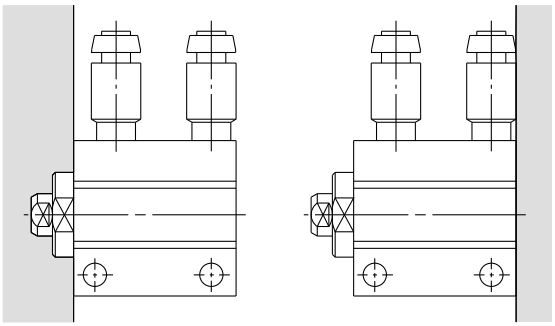

Mounting condition 3 **Mounting condition 4**

∗ The above figures show the mounting conditions with the KJS one-touch fittings.
∗∗ Refer to "Best Pneumatics" for details on one-touch fittings and hose nipples.

Miniature Actuators and ø2 Piping Variations

Miniature Guide Rod Cylinder



Model	Bore size	Guide rod size	Stroke				Cushion
			5	10	15	20	
MGJ	6	5	●	●	●		Rubber bumper (Both sides)
	10	6	●	●	●	●	

One-touch Mini



Model	Applicable tubing O.D.	Connection thread
KJ	ø2	M3 x 0.5 M5 x 0.8

Miniature Fittings



Model	Applicable tubing	Type	Port size
M	ø2 x ø1.2	Barb fitting	M3 x 0.5, M5 x 0.8
		Barb elbow	
		Barb one-touch	ø3.2, ø4
		Plug-in reducer	

Polyurethane Tubing

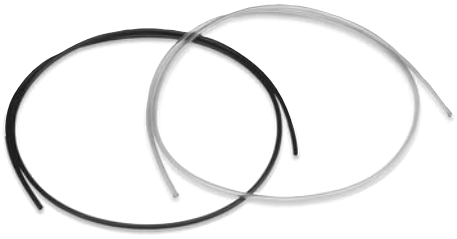

Model	O.D. x I.D.	Material	Color	Length
TU0212	ø2 x ø1.2	Polyurethane	Black, White, Red, Blue, Yellow, Green, Clear	20 m

Back page 11

Record of changes		
B edition	∗ Addition of applicable strokes for double acting type. ø4: 15, 20 stroke ø6: 20, 25, 30 stroke ø8, ø10: 25, 30 stroke	JR
C edition	∗ Addition of bore sizes, ø12, ø16, ø20. ∗ Number of pages from 28 to 40.	MT

⚠ Safety Instructions | Be sure to read “Precautions for Handling Pneumatic Devices” (M-03-E3A) before using.

SMC Corporation

Akihabara UDX 15F,
4-14-1, Sotokanda, Chiyoda-ku, Tokyo 101-0021, JAPAN
Phone: 03-5207-8249 Fax: 03-5298-5362
URL http://www.smcworld.com

© 2008 SMC Corporation All Rights Reserved

Specifications are subject to change without prior notice
and any obligation on the part of the manufacturer.

D-DN 1st printing FR printing MT 16400DN Printed in Japan.

This catalog is printed on recycled paper with concern for the global environment.