3-Screen Display

New

Multi-channel Digital Sensor Monitor

RoHS

IO-Link

Up to 4 pressure sensors can be connected!





It is possible to change the settings while checking the measured value.

Main screen	Measured value (Current pressure value)	
Sub screen	Left side: Label (Display item)	Right side: Set value (Threshold value)

Visualization of Settings

Set value (Threshold value)	P_1
Hysteresis value	H_1
Peak value	H_Hi
Bottom value	H_Lo
Channel display	CH_1

- **Differential Pressure Check Mode** p. 2
- **3 channels are displayed simultaneously.** p. 2
- **Input Range Selection** p. 3

IO-Link Compatible

- **Hub Function** p. 4
  Convert analog signals to digital signals!



Applicable Pressure Sensor Variations

Compact Pneumatic Pressure Sensor **PSE53□**	Compact Pneumatic Pressure Sensor **PSE54□**	Low Differential Pressure Sensor **PSE550**	Pressure Sensor for General Fluids **PSE56□**	Pressure Sensor for General Fluids **PSE57□**
				

PSE200A Series

SMC

CAT.ES100-124A

Visualization of Settings

Item and set value are displayed together.
Easy to confirm the displayed item

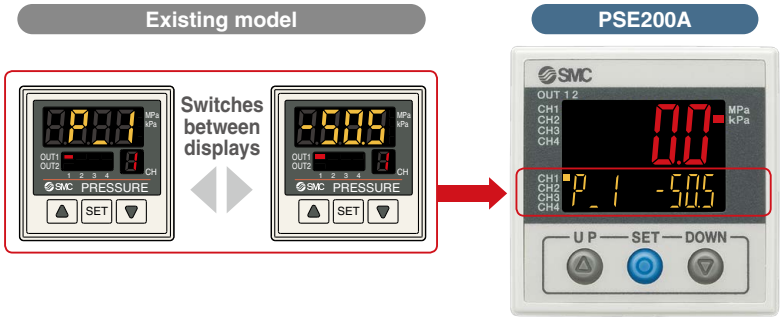

Mode Examples

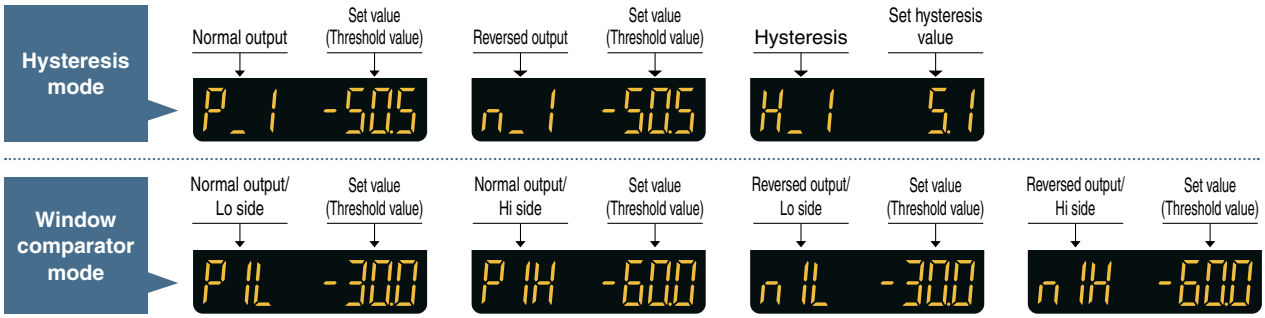

Easy Screen Switching

It is possible to change the settings while checking the measured value.

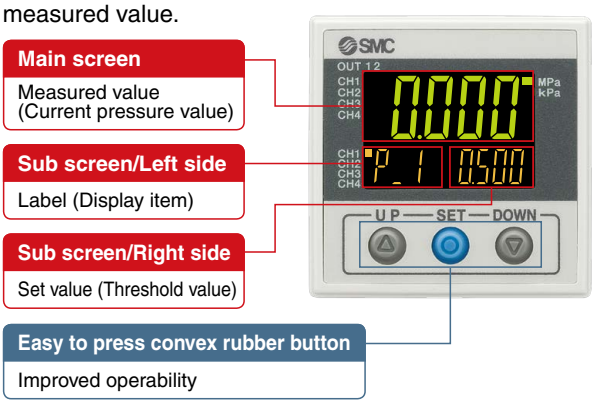

The sub screen can be switched by pressing the down buttons.

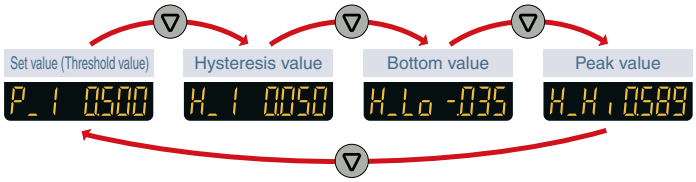

* One additional arbitrary display mode can be added via the function settings.

CH display | Other channel | Customer defined label | Level bar

Simple 3-Step Setting

After selecting the channel, when the SET button is pressed and the set value (P_1) is displayed, the set value (threshold value) can be set.

When the SET button is pressed and the hysteresis (H_1) is being displayed, the hysteresis value can be set.

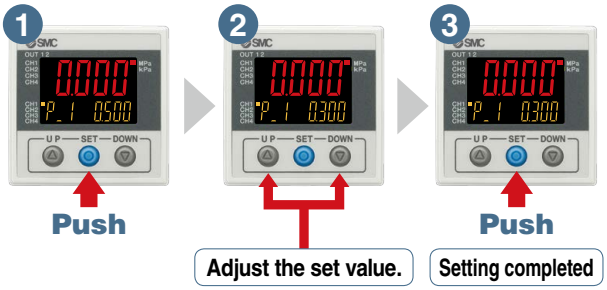

Now with a snap shot function for set value reading

Snap shot function

Pressing the △ and ▽ buttons simultaneously for a minimum of 1 second will make the set value (threshold value) the same as the current pressure value.

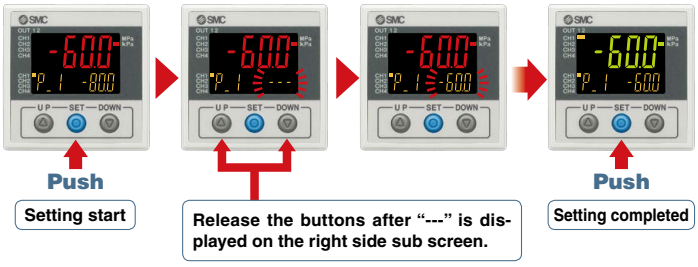

Centralized Control Saves Installation Space.

66% reduction in installation space
(Compared with the panel mounted Z/ISE20□)

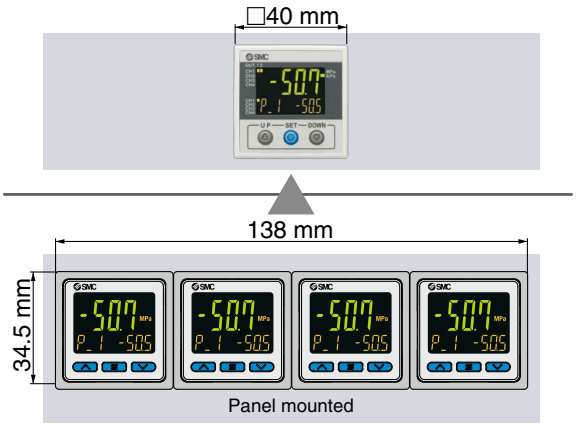

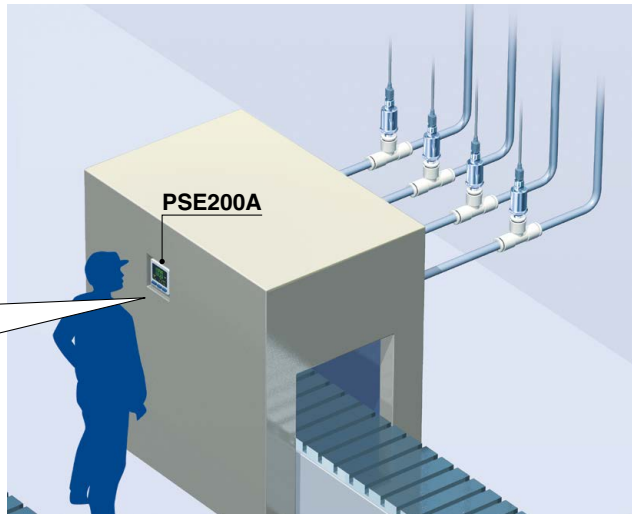

Differential Pressure Check Mode p. 16

One monitor displays 2 lines of differential pressure.

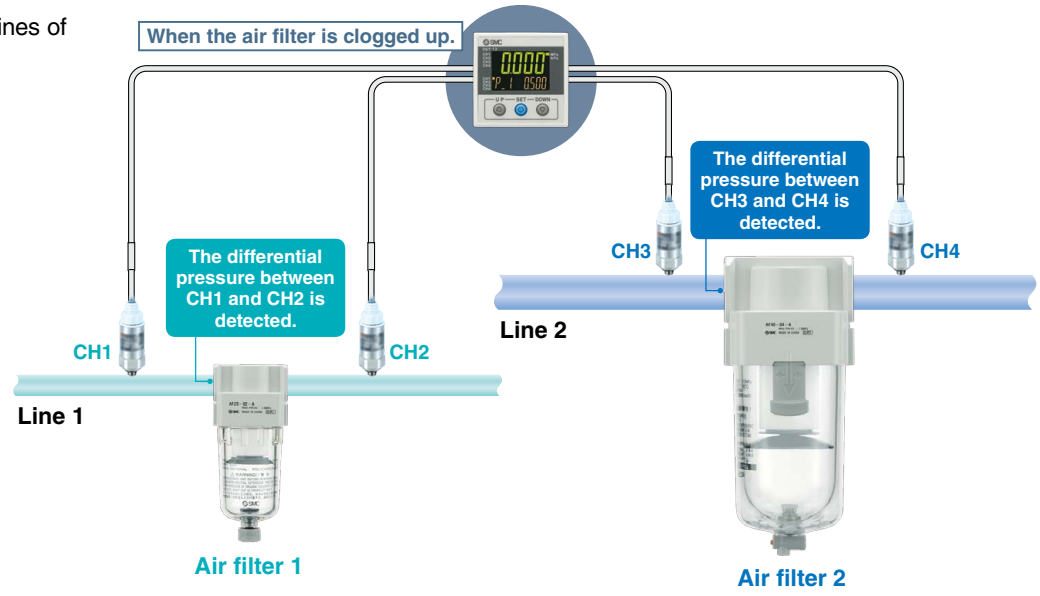

A Single Monitor Various Applications

3 channels are displayed simultaneously.
(Customer defined channel can be set.)

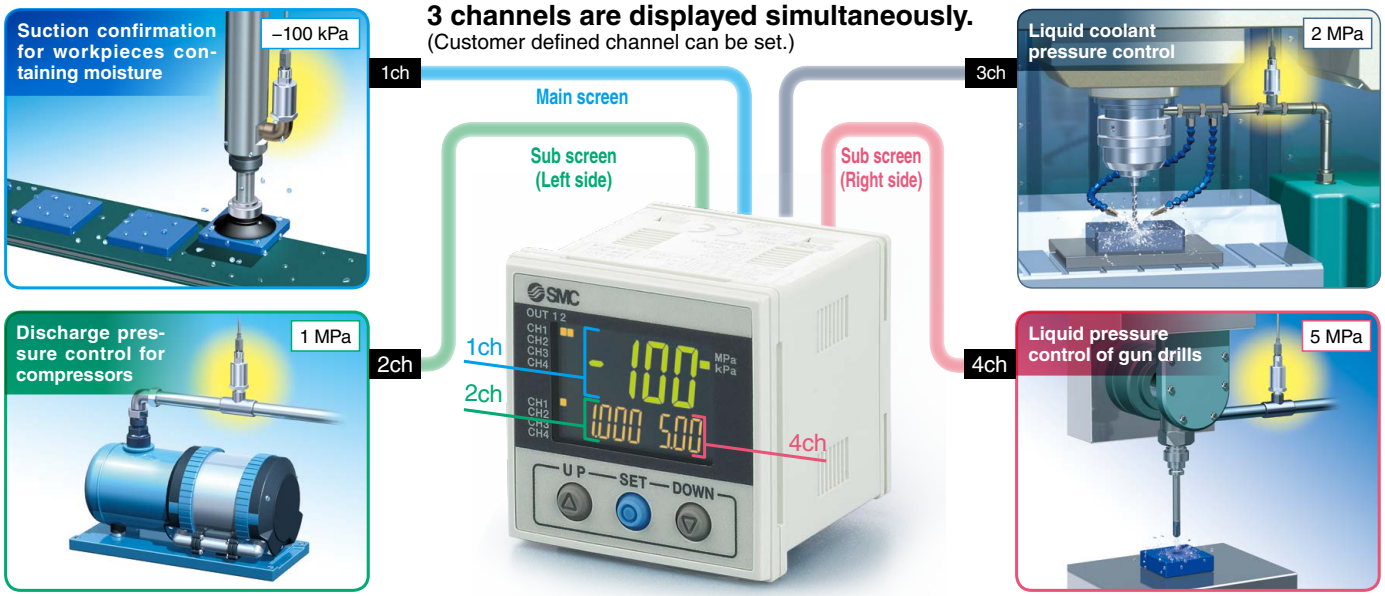

Input Range Selection (for Pressure/Flow rate)

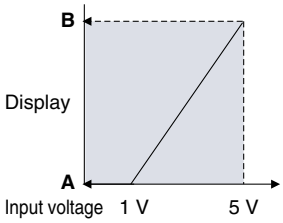

The sensor input range can be set to the required value and displayed. (Voltage input: 1 to 5 V)
Pressure switch/Flow switch can be displayed.

A is displayed for 1 V. B is displayed for 5 V.
The range can be set as required.
Refer to page 8 for the specification of the sensors which can be connected.
For the individual specifications of each connectable sensor, refer to the **Web Catalog**.

For Digital Flow Switch for Water / PF3W511



	A	B
PF3W504	0	4
PF3W520	0	16
PF3W540	0	40
PF3W511	0	100

Set A and B to the values shown in the table on the left.

For Flow Sensor / PFMV5



Setting of the display for analog voltage

	A	B
PFMV5 Series	1.00	5.00

Set A and B to the values shown in the table on the left.

Connectors

Connection and removal of wiring is easy.

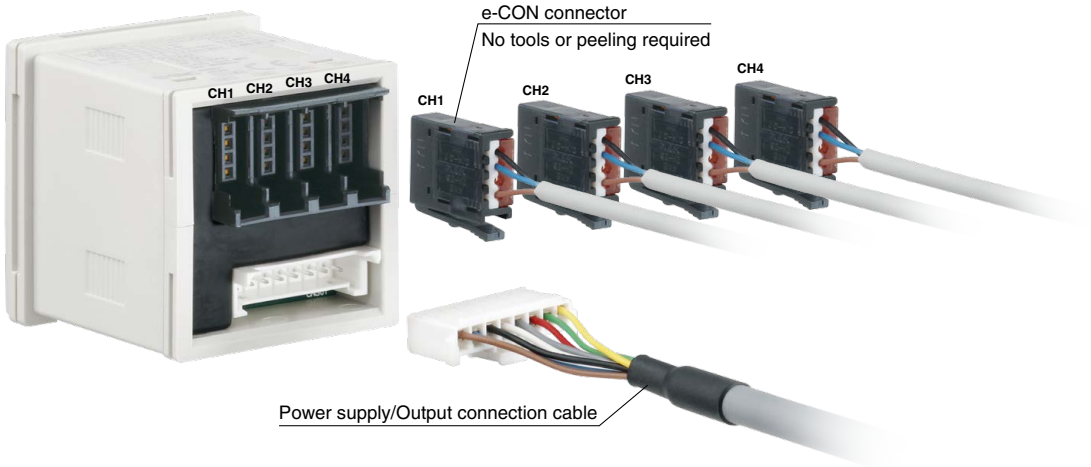

Functions pp. 14 to 17

Auto-preset function
This function, when selected in the initial setting, calculates and stores the set value from the measured pressure.

Display value fine adjustment function
Fine adjustment of the indicated value of the pressure sensor can be made within the range of ±5% of the read value.

Peak/Bottom value indication function
This function constantly detects and updates the maximum (minimum) pressure when the power is supplied, and allows to hold the maximum (minimum) pressure value.

Key-lock function
This function prevents operation errors such as accidentally changing setting values.

Zero-clear function
This function clears and resets the zero value on the display of measured pressure.

Error display function
This function displays error location and content when a problem or error has occurred.

Anti-chattering function
This function prevents the detection of such temporary drops in the supply pressure as errors by changing the delay time setting.

Pressure range/Unit selection function
The pressure range and displayed unit can be switched.

Zero-cut setting
When the pressure display value is close to zero, this function forces the display to zero.

Selection of power-saving mode
Power-saving mode can be selected.
It shifts to power-saving mode automatically when there is no button operation for 30 seconds.

Setting of security code
Users can select whether a security code must be entered to release the key lock.

Auto-shift function
This function compensates for such supply pressure fluctuations. It measures the pressure at the time of auto-shift signal input and uses it as the reference pressure to correct the set value on the switch.

Differential pressure check mode
Set and display the differential pressure between CH1 - CH2, and CH3 - CH4.

Channel to channel copy function
The set values can be copied to other channel.

Channel select function
Pressure value for the selected channel is displayed.

Channel scan function
Pressure values for each channel are displayed in turn every 2 seconds.

Hub Function

Converts analog signals to digital signals and supports IO-Link

A currently used sensor can be used.

∗ Supports analog voltage output 1-5 V

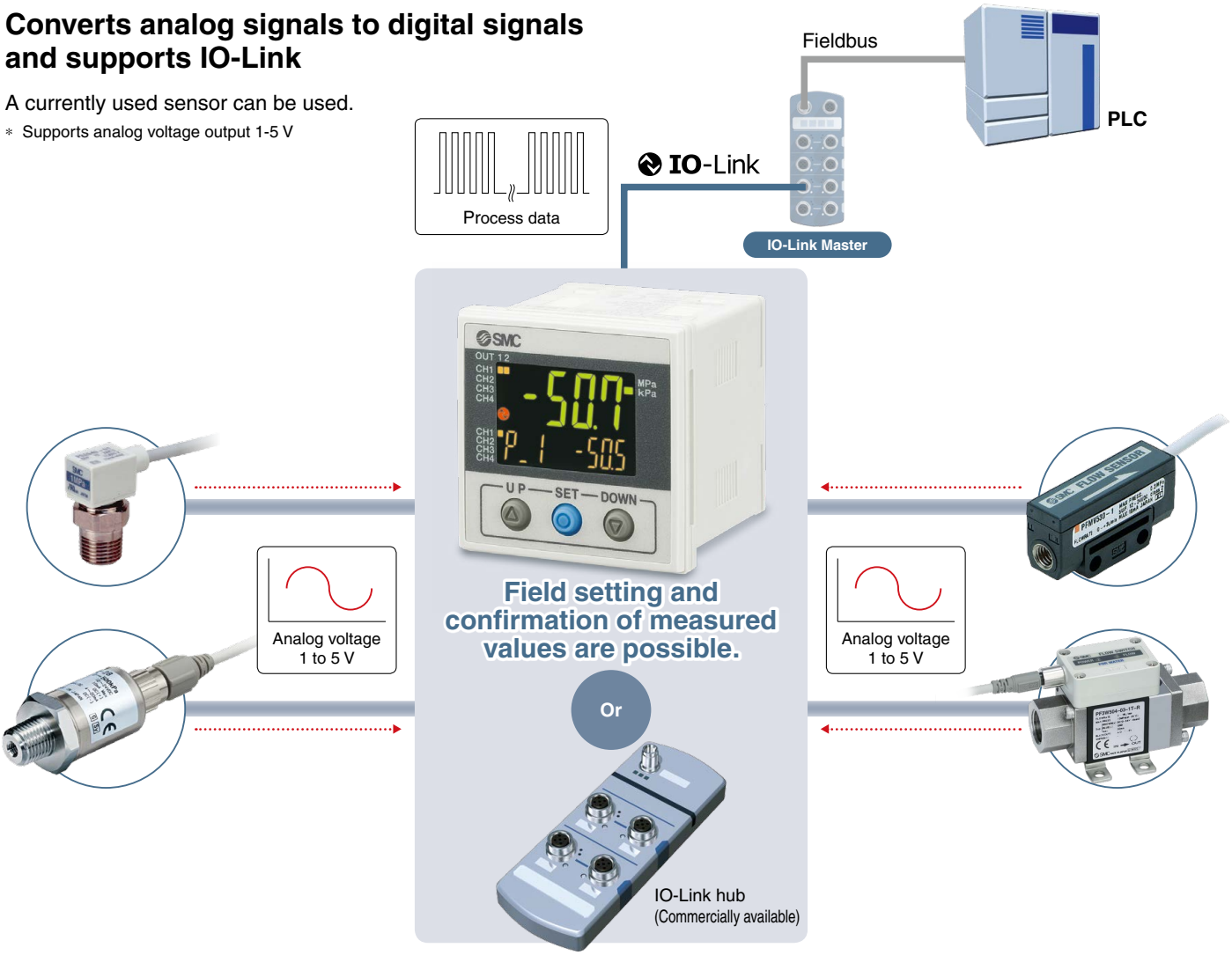

Process Data

Bit offset	79	78	77	76	75	74	73	72	71	70	69	68	67	66	65	64
Item	CH1[*1] measured value: 16-bit signed integer															
Bit offset	63	62	61	60	59	58	57	56	55	54	53	52	51	50	49	48
Item	CH2 measured value: 16-bit signed integer															
Bit offset	47	46	45	44	43	42	41	40	39	38	37	36	35	34	33	32
Item	CH3[*2] measured value: 16-bit signed integer															
Bit offset	31	30	29	28	27	26	25	24	23	22	21	20	19	18	17	16
Item	CH4 measured value: 16-bit signed integer															

Measurement data of sensors for 4 channels are combined and cyclically sent as a process data.

Bit offset	15	14	13	12	11	10	9	8	7	6	5	4	3	2	1	0
Item	Error diagnosis	Reservation			CH4 diagnosis	CH3 diagnosis	CH2 diagnosis	CH1 diagnosis	CH4 OUT2	CH4 OUT1	CH3 OUT2	CH3 OUT1	CH2 OUT2	CH2 OUT1	CH1 OUT2	CH1 OUT1

Each channel has 2 outputs[*3].

Diagnosis item	· Internal product malfunction · Outside of zero-clear range

Diagnosis item	· Applied pressure error · Differential pressure measurement error

Implement diagnostic bits in the process data.

∗1 During differential pressure operation mode, CH1-CH2 measurement value is used.
∗2 During differential pressure operation mode, CH3-CH4 measurement value is used.
∗3 During SIO mode, only CH1 has 2 switch outputs. CH2-4 has one output each.

IO-Link

IO-Link is an open communication interface technology between the sensor/actuator and the I/O terminal that is an international standard, IEC61131-9.

Visualization of operation/equipment status
Remote monitoring and control by communication

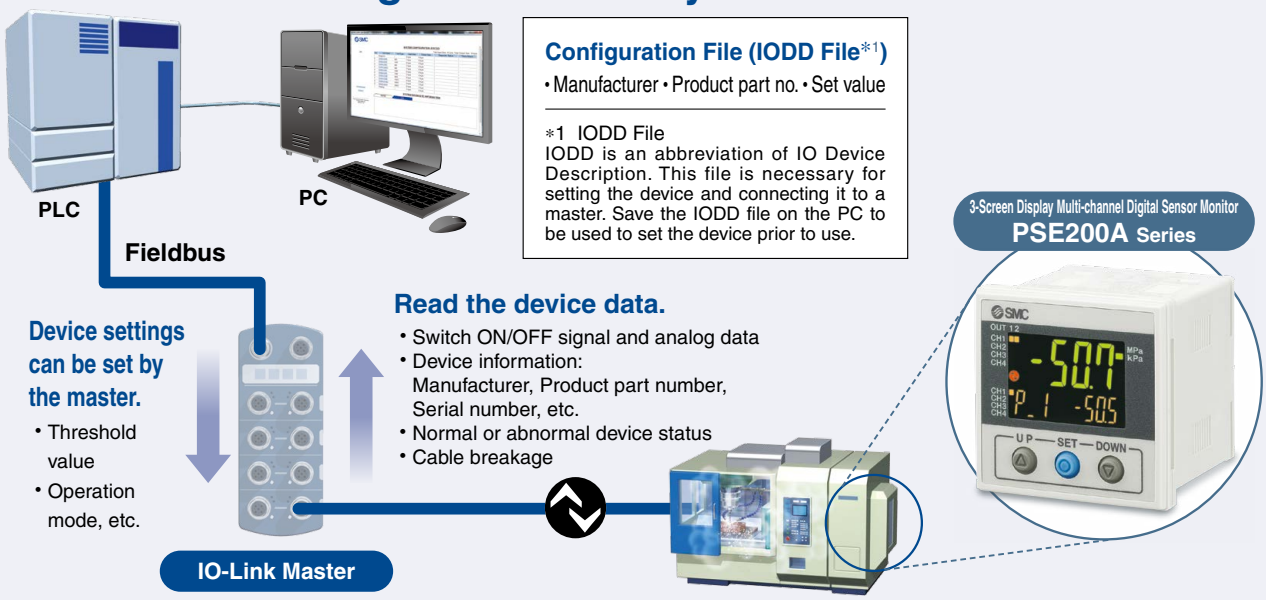

Automatic setting function [Data storage function]

When replacing the sensor monitor with the same type (the same device ID), the parameters (set values) stored in the IO-Link master are automatically copied (set) to the new sensor monitor.

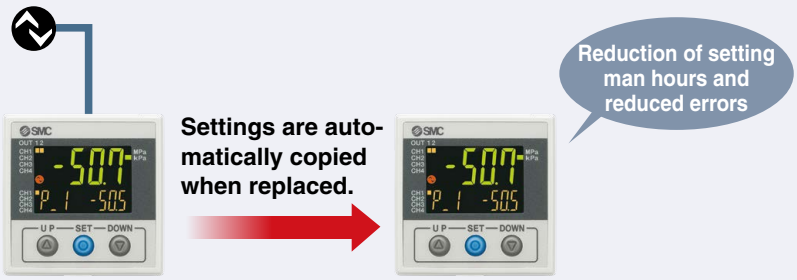

Displays the output communication status and indicates the presence of communication data

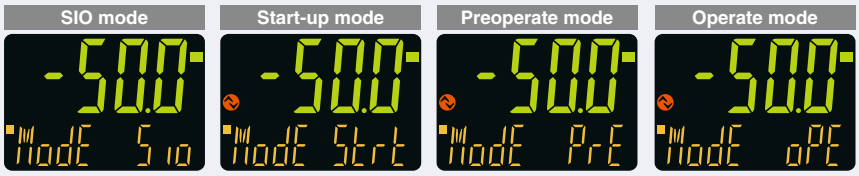

Operation and Display

Communication with master	IO-Link status indicator light	Status			Screen display *2	Description
Yes	*1	IO-Link mode	Normal	Operate	ModE oPE	Normal communication status (readout of measured value)
				Start up	ModE Strt	At the start of communication
				Preoperate	ModE PrE	
	*1 (Flashing)		Abnormal	Version does not match	Er 15 V 10	IO-Link version does not match that of the master. The master uses version 1.0. ∗ The applicable IO-Link version is 1.1.
No				Communication disconnection	ModE oPE / ModE Strt / ModE PrE	Normal communication was not received for 1 second or longer.
	OFF	SIO mode			ModE SIO	General switch output

*1 In IO-Link mode, the IO-Link indicator is ON or flashes. *2 When the sub screen is set to Mode
∗ "ModE LoC" is displayed when the data storage lock is enabled. (Except for version mismatch or when in SIO mode)

Series Variations

		Digital Sensor Monitor		Pressure Sensor Controller
		PSE200A	**PSE300AC**	**PSE300A**
				
Basic Specifications	Repeatability	**±0.1% (F.S.)**	±0.1% (F.S.)	
	Voltage	**12 to 24 VDC**	12 to 24 VDC	
	No. of outputs for switch	**5 outputs**	2 outputs	
	Analog output	—	—	1 to 5 V 4 to 20 mA
	Operating temperature	**0 to 50°C**	0 to 50°C	
Functions	Number of screens	**3**	3	
	Enclosure	**Front face: IP65** **Others: IP40**	IP65	IP40
	3 Step	**Yes**	Yes	
	Wiring	**Connector**	Connector	

Applicable Pressure Sensors

Refer to the **Web Catalog** for details.

Compact Pneumatic Pressure Sensor **PSE53□**	Compact Pneumatic Pressure Sensor **PSE54□**	Low Differential Pressure Sensor **PSE550**	Pressure Sensor for General Fluids **PSE56□**	Pressure Sensor for General Fluids **PSE57□**
				
Rated pressure range	Rated pressure range	Rated pressure range	Rated pressure range	Rated pressure range
−101 kPa to 0 −100 kPa to 100 kPa 0 to 100 kPa 0 to 1 MPa	−101 kPa to 0 −100 kPa to 100 kPa 0 to 1 MPa	0 to 2 kPa	−101 kPa to 0 −100 kPa to 100 kPa 0 to 500 kPa 0 to 1 MPa	−100 kPa to 100 kPa 0 to 500 kPa 0 to 1 MPa 0 to 2 MPa 0 to 5 MPa 0 to 10 MPa

CONTENTS

How to Order ····· p. 7
Options/Part Nos. ····· p. 7
Specifications ····· p. 8
Applicable Pressure Sensors ····· p. 9
Internal Circuits and Wiring Examples ····· p. 9
Dimensions ····· p. 12
Function Details ····· p. 13

3-Screen Display
Multi-channel Digital Sensor Monitor
PSE200A Series

RoHS



How to Order

PSE20 0 A – M □ □ □

Input/Output specification

0	NPN 5 outputs + Auto-shift input
1	PNP 5 outputs + Auto-shift input
2	IO-Link + NPN 4 outputs or NPN 5 outputs (SIO mode)
3	IO-Link + PNP 4 outputs or PNP 5 outputs (SIO mode)

Unit specification

Nil	With unit selection function*1
M	SI units only*2

*1 Under the New Measurement Act, switches with the unit selection function are no longer allowed for use in Japan.
*2 Fixed unit: kPa, MPa, Pa

Option 1

Nil	None
A	Panel mount adapter 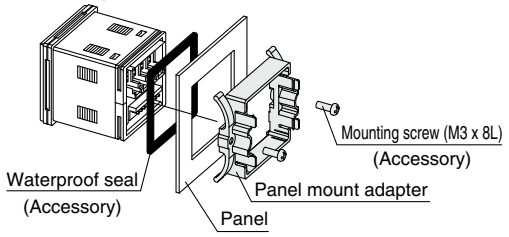
B	Front protection cover + Panel mount adapter 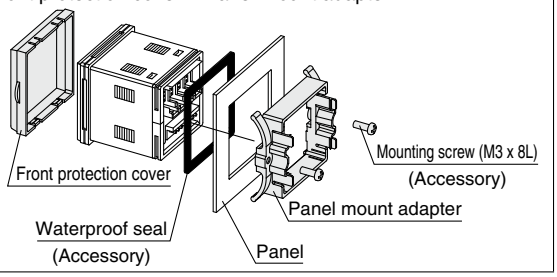

* Options are not assembled, but shipped together.

Option 3

Nil	Power supply/Output connection cable (2 m) 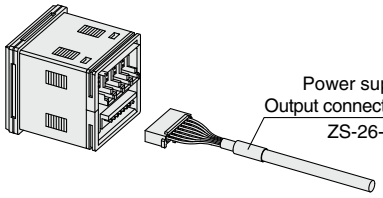
N	None

* Cable is shipped together, but not connected.

Option 2

Nil	None
4C	Sensor connector (4 pcs.) 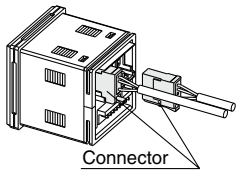

* Connector is not connected, but shipped together.
* This connector cannot be used with the PSE570 series.

Options/Part Nos.

When only optional parts are required, order with the part numbers listed below.

Description	Part no.	Note
Panel mount adapter	**ZS-26-B**	Waterproof seal, mounting screws M3 x 8L (2 pcs.) included
Front protection cover + Panel mount adapter	**ZS-26-C**	Waterproof seal, mounting screws M3 x 8L (2 pcs.) included
□48 conversion adapter * This adapter is used to mount the PSE200A series on the panel fitting of the PSE100 series.	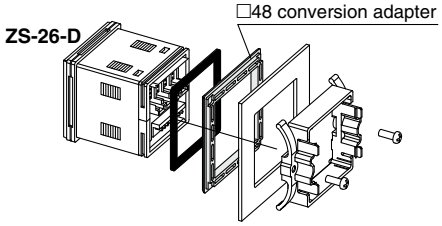 Order panel mount adapter separately.	
Front protection cover	**ZS-26-01**	
Sensor connector (1 pc. per set)	ZS-28-C	For the PSE5□□ series (Excludes the PSE570 series)
	ZS-28-CA-4	For PSE570 series
Power supply with M12 connector/Output cable (Made to Order) * For use when using an M12 connector for IO-Link communication	ZS-26-LM12 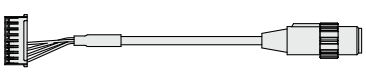	

SMC

For pressure switch precautions and specific product precautions, refer to the "Operation Manual" on the SMC website. Click here for details.

Specifications

Series		PSE200A								
Applicable SMC pressure sensor		PSE550	PSE531 PSE541 PSE561	PSE533 PSE543 PSE563 PSE573	PSE532	PSE564 PSE574	PSE530 PSE540 PSE560 PSE570	PSE575	PSE576	PSE577
Rated pressure range		0 to 2 kPa	0 to −101 kPa	−100 to 100 kPa	0 to 100 kPa	0 to 500 kPa	0 to 1 MPa	0 to 2 MPa	0 to 5 MPa	0 to 10 MPa
Display/Set pressure range		−0.2 to 2.1 kPa	10 to −105 kPa	−105 to 105 kPa	−10 to 105 kPa	−50 to 525 kPa	−0.105 to 1.05 MPa	−0.105 to 2.1 MPa	−0.25 to 5.25 MPa	−0.5 to 10.5 MPa
Display/Smallest settable increment		0.001 kPa	0.1 kPa	0.1 kPa	0.1 kPa	1 kPa	0.001 MPa	0.001 MPa	0.01 MPa	0.01 MPa
Electrical	**Power supply voltage** — **When used as a switch output device**	12 to 24 VDC ±10% with 10% ripple (p-p) or less								
	Power supply voltage — **When used as an IO-Link device**	18 to 30 VDC, including ripple (p-p) 10%*1								
	Current consumption	55 mA or less								
	Protection	Polarity protection								
	Power supply voltage for sensor*1	[Power supply voltage] −1.5 V								
	Power supply current for sensor*2	Max. 50 mA (However, the total current for the 4 inputs is 200 mA maximum or less.)								
Accuracy	**Display accuracy**	±0.5% F.S. ±1 digit (Ambient temperature of 25 ±3°C)								
	Repeatability	±0.1% F.S. ±1 digit								
	Temperature characteristics	±0.5% F.S. (Reference: 25°C)								
Switch output (SIO mode)	**Output type**	NPN or PNP open collector output: 5 outputs								
	Output mode	Hysteresis mode, Window comparator mode, Error output, Output OFF								
	Switch operation	Normal output, Reversed output								
	Max. load current	80 mA								
	Max. applied voltage (NPN only)	30 VDC								
	Internal voltage drop (Residual voltage)	1.5 V or less (at load current of 80 mA)								
	Delay time*3	5 ms or less, variable from 0 to 60 s/0.01 s increments								
	Hysteresis	Variable from 0*4								
	Protection	Over current protection								
Sensor input	**Input type**	Voltage input: 1 to 5 VDC (Input impedance: 1 MΩ)								
	Number of inputs	4 inputs								
	Connection method	e-CON								
	Protection	Over voltage protection (up to a voltage of 26.4 VDC)								
Auto-shift input*5		Voltage free input (Reed or Solid state), input for 5 ms or longer, Independently controllable auto-shift function ON/OFF								
Display	**Unit***6	MPa, kPa, Pa, kgf/cm², bar, mbar, psi, inHg, mmHg, mmH₂O (depends on selected range)								
	Display type	LCD								
	Number of screens	3-screen display (Main screen, Sub screen x 2)								
	Display color	Main screen: Red/Green, Sub screen: Orange								
	Number of display digits	Main screen: 4 digits (7 segments), Sub screen (Left): 4 digits (some digits are 11-segments, 7 segments for other), Sub screen (Right): 5 digits (some digits are 11-segments, 7 segments for other)								
	Indicator light	Lights up when switch output is turned ON. OUT1, OUT2: Orange								
Digital filter*7		Variable from 0 to 30 s/0.01 s increments								
Environment	**Enclosure**	Front face: IP65 (when panel-mounted), Others: IP40*8								
	Withstand voltage	1000 VAC for 1 minute between terminals and housing								
	Insulation resistance	50 MΩ or more (500 VDC measured via megohmmeter) between terminals and housing								
	Operating temperature range	Operating: 0 to 50°C, Stored: −10 to 60°C (No condensation)								
	Operating humidity range	Operating/Stored: 35 to 85% RH (No condensation)								
Standards		CE marking (EMC Directive, RoHS Directive)								
Weight	**Body**	51 g (Excludes power supply and output cable)								
	Power supply/Output cable	60 g								
	e-CON (1 pc.)	2 g								
Communication (IO-Link mode)	**IO-Link type**	Device								
	IO-Link version	V1.1								
	Communication speed	COM2 (38.4 kbps)								
	Configuration file	IODD file*9								
	Minimum cycle time	4.8 ms								
	Process data length	Input data: 10 bytes, Output data: 0 bytes								
	On request data communication	Yes								
	Data storage function	Yes								
	Event function	Yes								
	Vendor ID	131 (0 x 0083)								

*1 Check the power supply voltage range of the connected sensor.
*2 Over current on DC (+) side and DC (−) side of the sensor input connector results in breakage of the product.
*3 Value without digital filter (at 0 ms)
*4 If the applied pressure fluctuates around the set value, the hysteresis must be set to a value more than the amount of fluctuation, or chattering will occur.
*5 This setting is only possible for the PSE200A/PSE201A.
*6 This setting is only possible for models with the unit selection function. Only MPa, kPa, or Pa is available for models without this function.
*7 The response time indicates when the set value is 90% in relation to the step input.
*8 If □48 conversion adapter is used, it meets IP40.
*9 The configuration file can be downloaded from the SMC website, https://www.smcworld.com
* Products with tiny scratches, marks, or display color or brightness variations which do not affect the performance of the product are verified as conforming products.

Cable Specifications

Conductor area		0.15 mm² (AWG26)
Insulator	**O.D.**	0.9 mm
Sheath	**Finished O.D.**	ø4.8

Applicable Pressure Sensors

Applicable SMC pressure sensor					Rated pressure range
PSE53□	PSE54□	PSE550	PSE56□	PSE57□	−100 kPa 0 100 kPa 500 kPa 1 MPa 2 MPa 5 MPa 10 MPa
PSE531	PSE541	—	PSE561	—	−101 kPa 0
PSE533	PSE543	—	PSE563	PSE573	−100 kPa 100 kPa
PSE532	—	—	—	—	0 100 kPa
—	—	—	PSE564	PSE574	0 500 kPa
PSE530	PSE540	—	PSE560	PSE570	0 1 MPa
—	—	—	—	PSE575	0 2 MPa
—	—	—	—	PSE576	0 5 MPa
—	—	—	—	PSE577	0 10 MPa
—	—	PSE550	—	—	0 2 kPa

Internal Circuits and Wiring Examples

PSE20□A−□□□□

Input/Output specifications

0

· NPN open collector 5 outputs + Auto-shift 1 input

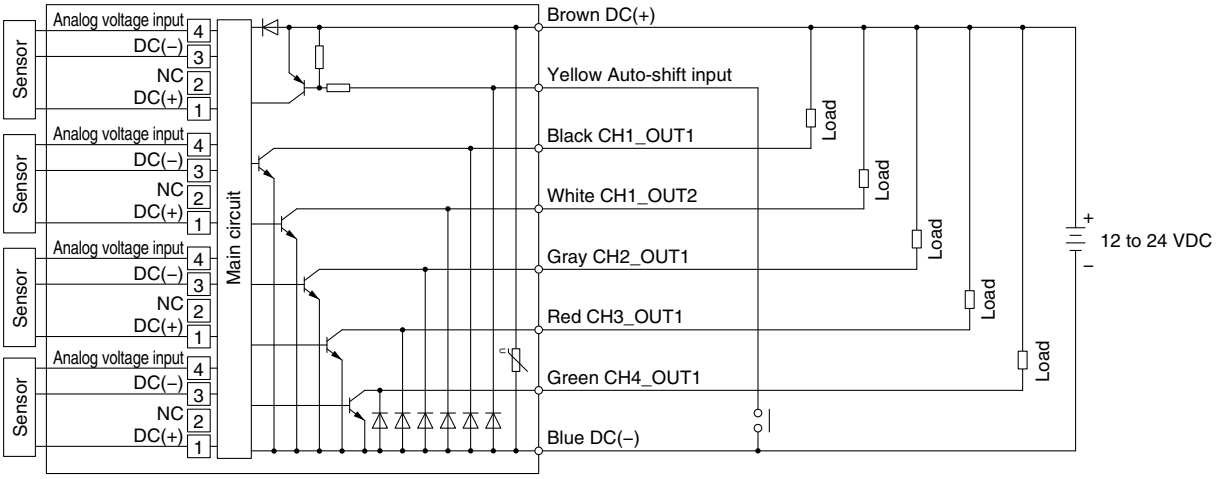

1

· PNP open collector 5 outputs + Auto-shift 1 input

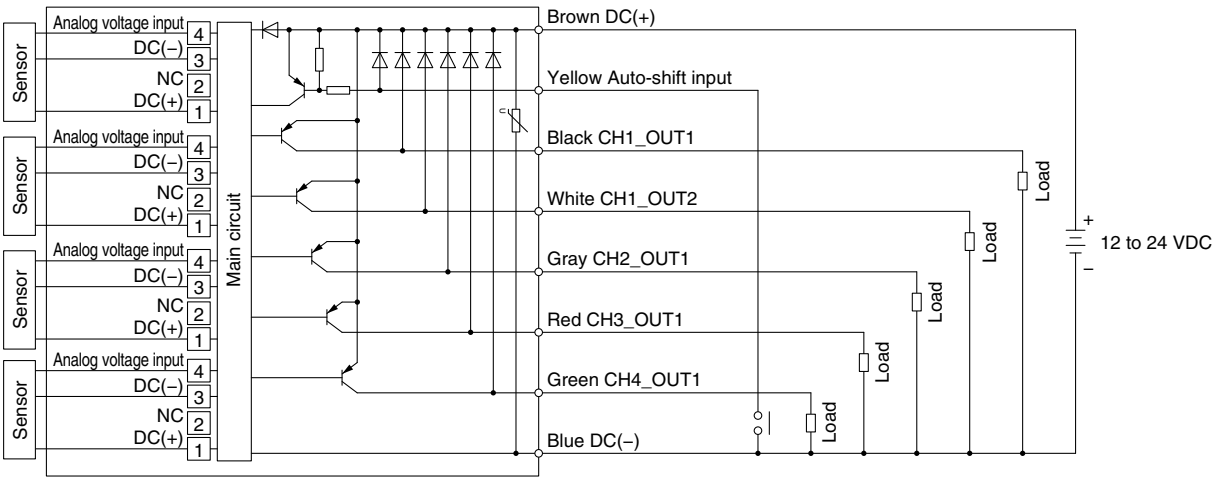

Internal Circuits and Wiring Examples

PSE20□A−□□□□

Input/Output specifications

2

· IO-Link/NPN open collector 1 output + NPN open collector 4 outputs

When used as an IO-Link device

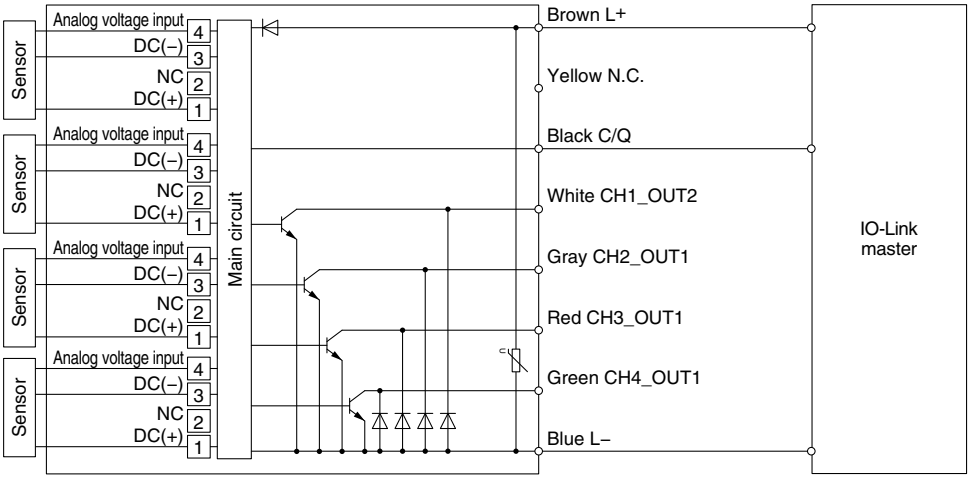

When used as a switch output device

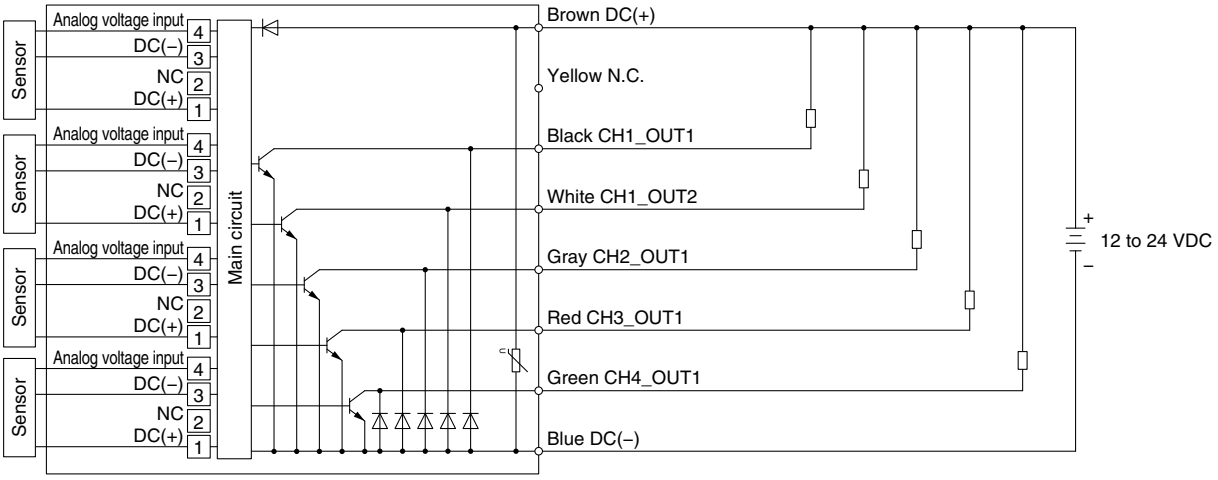

Internal Circuits and Wiring Examples

PSE20□A−□□□□

Input/Output specifications

3

· IO-Link/PNP open collector 1 output + PNP open collector 4 outputs

When used as an IO-Link device

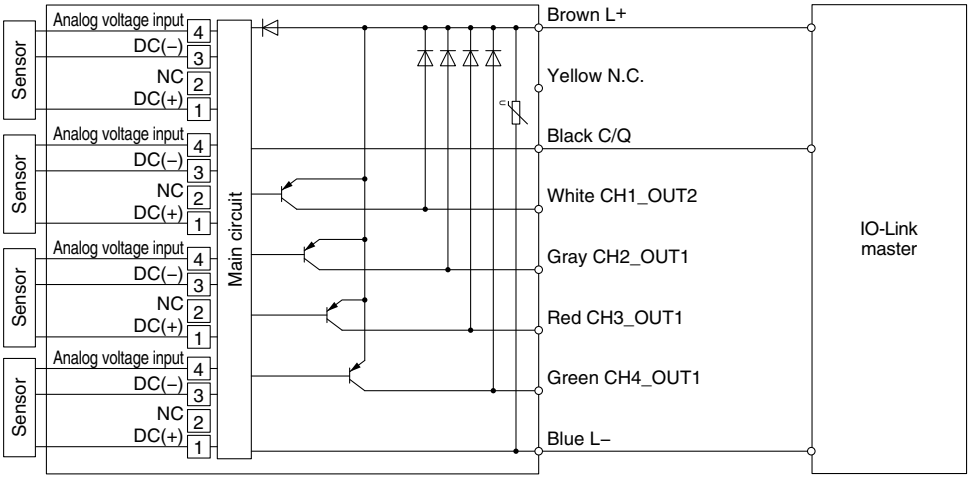

When used as a switch output device

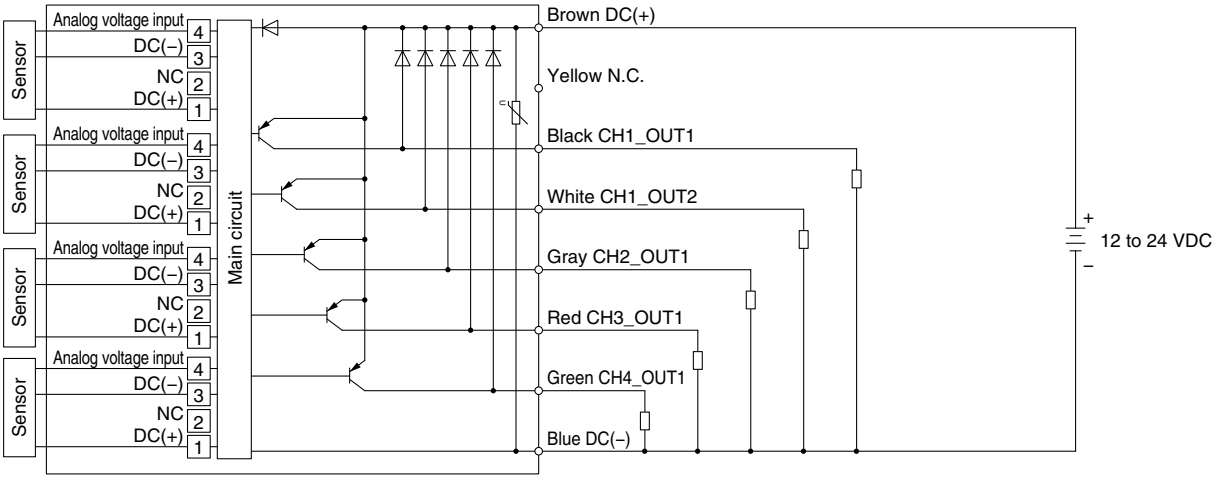

Dimensions

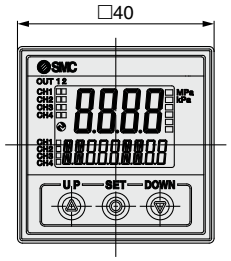

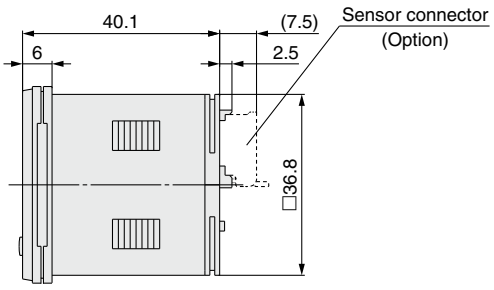

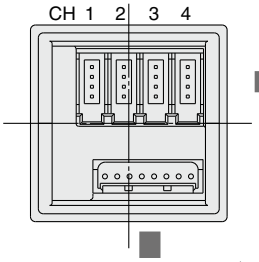

Sensor connector (4P x 4)

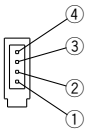

Pin no.	Terminal
①	DC (+)
②	N.C
③	DC (–)
④	IN (1 to 5 V)

Connector (Option)

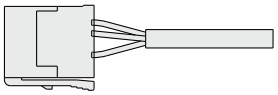

Power supply/Output connector (8P)

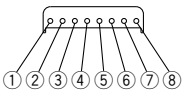

Pin no.	Terminal	
	PSE200A/PSE201A	PSE202A/PSE203A
①	DC (+)	L+
②	DC (–)	L–
③	CH1_OUT1	C/Q (CH1_OUT1)
④	CH1_OUT2	
⑤	CH2_OUT1	
⑥	CH3_OUT1	
⑦	CH4_OUT1	
⑧	Auto-shift input	N.C.

Power supply/Output connection cable (Accessory)

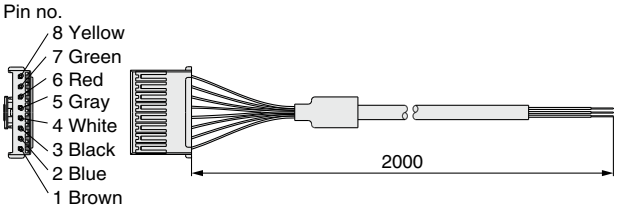

Power supply with M12 connector/Output cable (Made to Order)

∗ For use when using an M12 connector for IO-Link communication

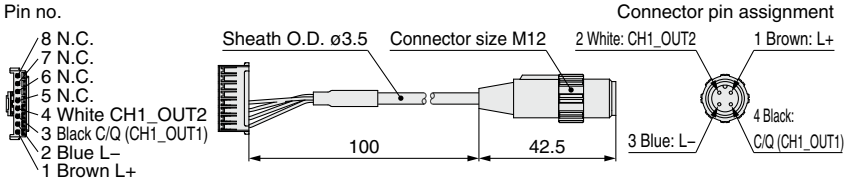

Front protection cover + Panel mount adapter

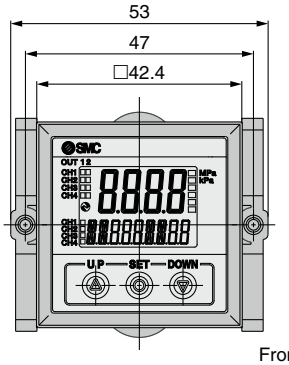

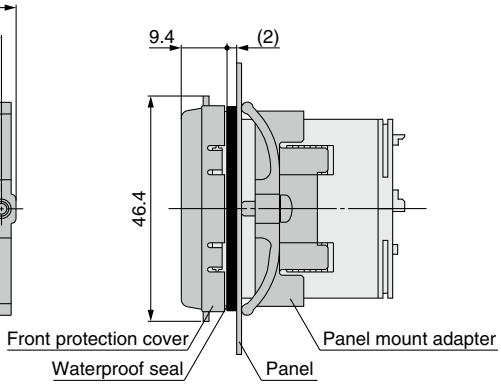

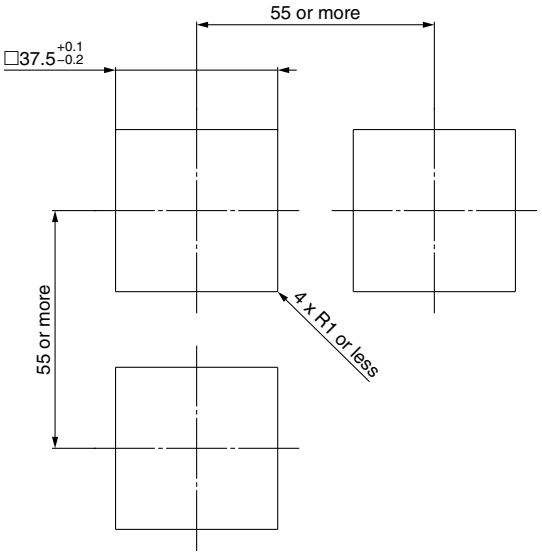

Panel fitting dimensions
Applicable panel thickness:
0.5 to 8 mm

□48 conversion adapter + Panel mount adapter

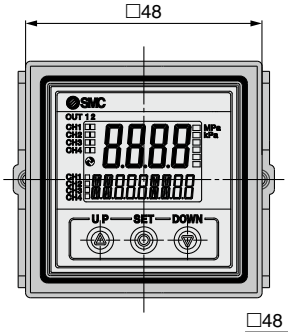

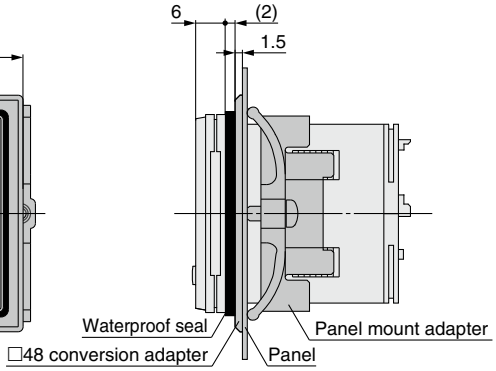

Function Details

Display examples of the main and sub (set value) screens of each mode. (When 1 MPa range is selected)

Hysteresis mode, Normal output

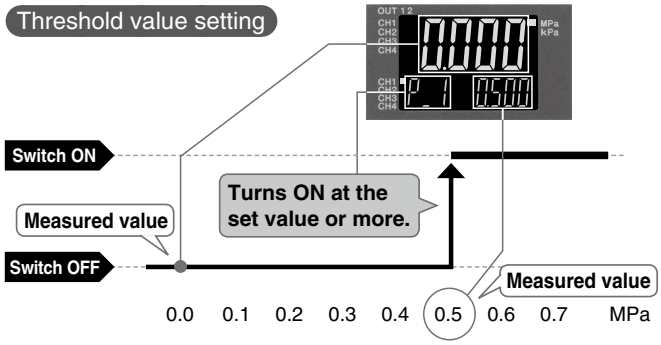

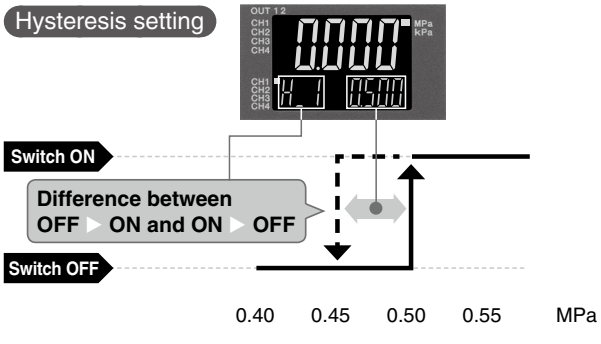

Hysteresis mode, Reversed output

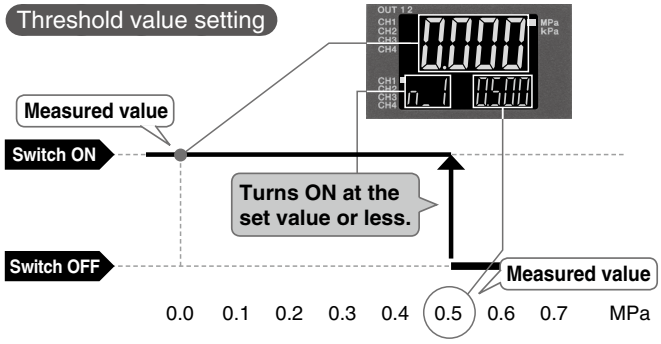

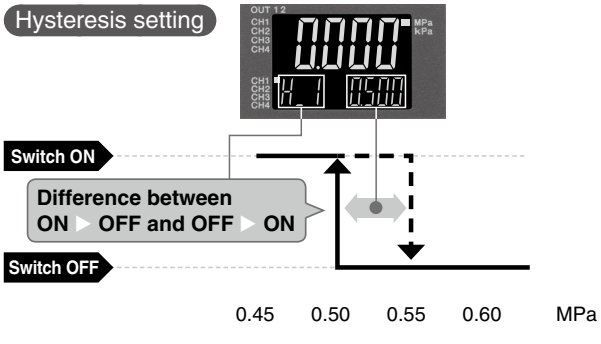

Window comparator mode, Normal output

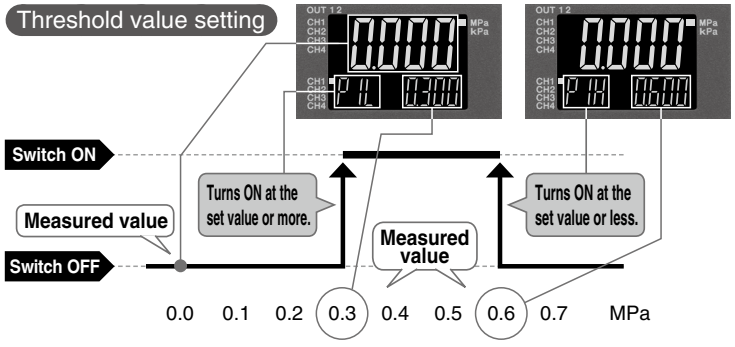

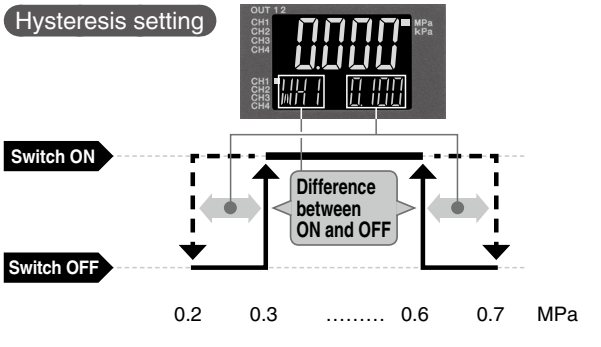

Window comparator mode, Reversed output

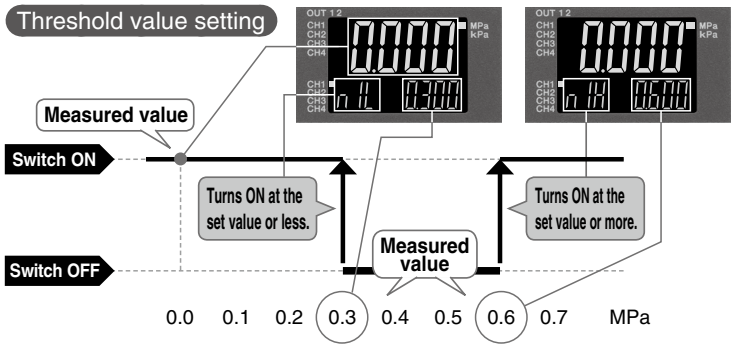

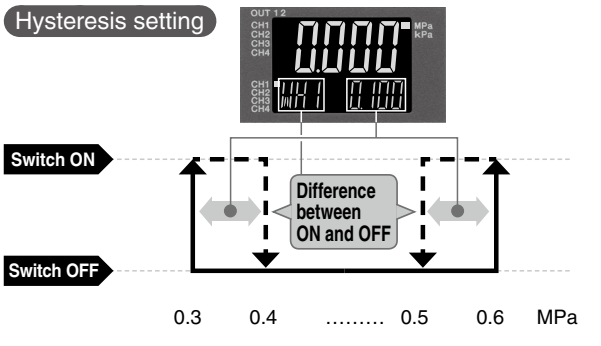

Function Details

A Auto-preset function (F4)

This function, when selected in the initial setting, calculates and stores the set value from the measured pressure. For example, if this function is used for suction verification, the optimum set value is determined automatically by repeating vacuum and break with the target workpiece several times.

Suction Verification

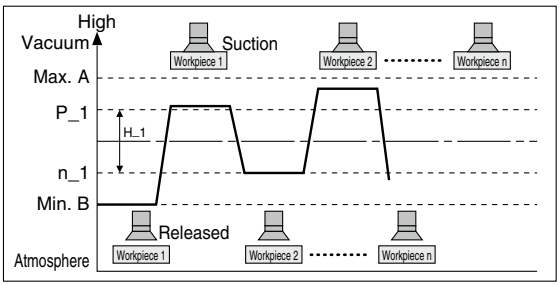

Formula for Obtaining the Set Value

P_1 or n_1	H_1
P_1=A–(A–B)/4 n_1=B+(A–B)/4	H_1=|(A–B)/2|

B Display value fine adjustment function (F6)

Fine adjustment of the indicated value of the pressure sensor can be made within the range of ±5% of the read value. (This eliminates wide variations of the indicated value.)

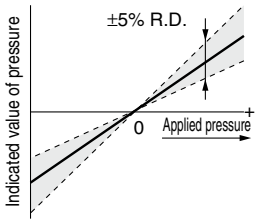

∗ When the display value fine adjustment function is used, the set pressure value may change ±1 digit.

C Peak/Bottom value indication function

This function constantly detects and updates the maximum (minimum) pressure when the power is supplied, and allows to hold the maximum (minimum) pressure value.

When the ⓞ and ⓥ buttons are simultaneously pressed for 1 second or longer, while “holding”, the held value will be reset.

D Key-lock function

This function prevents operation errors such as accidentally changing setting values.

E Zero-clear function

This function clears and resets the zero value on the display of measured pressure. The indicated value can be adjusted within ±7% F.S. of the pressure at the time of factory shipment. (±3.5% F.S. for compound pressure)

F Error display function

This function displays error location and content when a problem or error has occurred.

Error name	Error code	Description	Action
Over current error	Er 1 CH∗1 oC1 / Er 2 CH∗1 oC2	The load current applied to the switch output has exceeded the maximum value. ∗1 indicates the channel with an error.	Turn the power off and remove the cause of the over current. Then supply the power again.
Residual pressure error	Er 3 zEro	During zero-clear operation, pressure over ±7% F.S. is present. Note that the mode is returned to measurement mode automatically 1 second later. The zero-clear range varies by ±1% F.S. due to variation between individual products.	Perform zero-clear operation again after restoring the applied pressure to an atmospheric pressure condition.
Applied pressure error	HHH	Supply pressure exceeds the maximum set pressure.	Reset applied pressure to a level within the set pressure range. Check the sensor connection.
	LLL	Supply pressure is below the minimum set pressure. A sensor may be disconnected or mis-wired.	
System error	Er 0 / Er 7 / Er 4 / Er 8 / Er 6 / Er 9	Internal data error	Turn the power off and then on again. If the failure cannot be solved, please contact SMC for investigation.

If the error cannot be reset after the above measures are taken, or errors other than those above are displayed, please contact SMC for investigation.

Function Details

G Anti-chattering function (Simple setting mode or F1, F2)

A large bore cylinder or ejector consumes a large volume of air during operation and may experience a temporary drop in the supply pressure. This function prevents the detection of such temporary drops in the supply pressure as errors by changing the delay time setting.
The delay time can be set in the range of 0.00 to 60.00 [s] in 0.01 [s] increments.

<Principle>
This function averages pressure values measured during the response time set by the user and then compares the average pressure value with the pressure set point value to output the result on the switch.

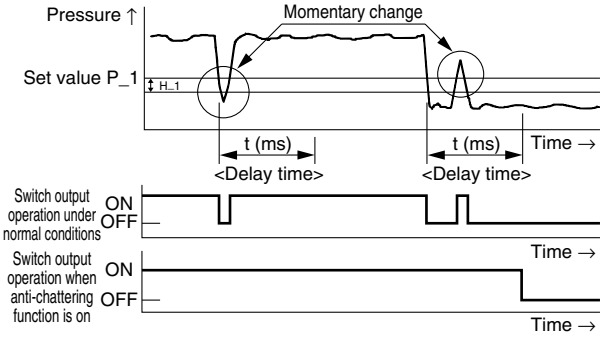

H Pressure range/Unit selection function (F0)

Pressure range and displayed units can be switched with this function.

Display unit / Display/ Smallest settable increment		Rated pressure range	Display/ Set pressure range	MPa	kPa	Pa	kgf/cm²	bar	mbar	psi	inHg	mmHg	mmH₂O
Applicable SMC pressure sensor	**PSE550**	0 to 2 kPa	−0.2 to 2.1 kPa		0.001	1			0.01	0.001			0.1
	PSE531 PSE541 PSE561	0 to −101 kPa	10 to −105 kPa	0.001	0.1		0.001	0.001		0.01	0.1	1	
	PSE533 PSE543 PSE563 PSE573	−100 to 100 kPa	−105 to 105 kPa	0.001	0.1		0.001	0.001		0.02	0.1	1	
	PSE532	0 to 100 kPa	−10 to 105 kPa	0.001	0.1		0.001	0.001		0.01			
	PSE564 PSE574	0 to 500 kPa	−50 to 525 kPa	0.001	1		0.01	0.01		0.1			
	PSE530 PSE540 PSE560 PSE570	0 to 1 MPa	−0.105 to 1.05 MPa	0.001	1		0.01	0.01		0.1			
	PSE575	0 to 2 MPa	−0.105 to 2.1 MPa	0.001	1		0.01	0.01		0.2			
	PSE576	0 to 5 MPa	−0.25 to 5.25 MPa	0.01			0.1	0.1		1			
	PSE577	0 to 10 MPa	−0.5 to 10.5 MPa	0.01			0.1	0.1		1			
—	—	0 to 1.6 MPa	−0.105 to 1.68 MPa	0.001	1		0.01	0.01		0.1			
		0 to 20 MPa	−1 to 21 MPa	0.01			0.1	0.1		2			
		0 to 25 MPa	−1.26 to 26.26 MPa	0.02			0.2	0.2		2			

I Zero-cut setting (F14)

When the pressure display value is close to zero, this function forces the display to zero.
The range to display zero can be changed within the range of 0.0 to 10.0%.

Example: When the PSE570 (1 MPa range), zero-cut value = 1.0%, 0 is displayed in the range of −9 to 9 kPa.

J Power-saving mode (F80)

Power-saving mode can be selected.
It shifts to power-saving mode automatically when there is no button operation for 30 seconds.
The product is set to normal mode (Power-saving mode is OFF) at the time of factory shipment.
(When in power-saving mode, [ECo] will flash in the sub screen and the operation light will be ON (only when the switch is ON).)

K Setting of security code (F81)

Users can select whether a security code must be entered to release the key lock.
At the time of factory shipment, it is set so that a security code is not required.

Function Details

L Auto-shift function (F5) (This setting is only possible for the PSE200A/PSE201A.)

When there are large fluctuations in the supply pressure, the switch may fail to operate correctly.
This function compensates for such supply pressure fluctuations. It measures the pressure at the time of auto-shift signal input and uses it as the reference pressure to correct the set value on the switch.

Set value correction by auto-shift function

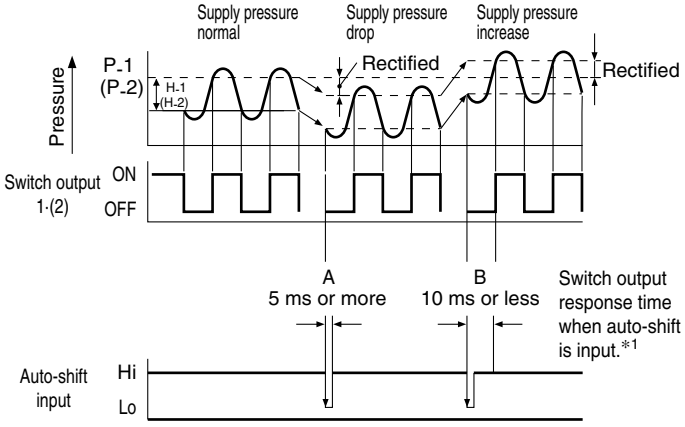

∗1 When delay time is 1.5 ms or less

When the auto-shift function is selected, "AS in 000" will be displayed on the sub screen for about 1 second, and the pressure value at that point will be saved as reference value "C_S" Based on the saved reference value, output on-off points controlled by set values∗2 such as "P_1," "H_1," "P_2," and "H_2" will also be rectified.

∗2 When an output is reversed, output on-off points displayed at "n_1," "H_1," "n_2," and "H_2" will be rectified.
The above is an example in hysteresis mode. On-off points are similarly rectified in window comparator mode. Outputs that enable the auto-shift function can be changed via the settings.

Settable Range for Auto-Shift Input

Range settings	Settable range
0 to 2 kPa	−2.30 to 2.300 kPa
0 to −101 kPa	115.0 to −115.0 kPa
−100 to 100 kPa	−210 to 210.0 kPa
0 to 100 kPa	−115.0 to 115.0 kPa
0 to 500 kPa	−575 to 575 kPa
0 to 1 MPa	−1.155 to 1.155 MPa
0 to 2 MPa	−2.20 to 2.205 MPa
0 to 5 MPa	−5.50 to 5.50 MPa
0 to 10 MPa	−11.00 to 11.00 MPa
0 to 1.6 MPa	−1.785 to 1.785 MPa
0 to 20 MPa	−22.0 to 22.00 MPa
0 to 25 MPa	−27.5 to 27.50 MPa

Auto-shift zero
The basic function of auto-shift zero is the same as that of auto-shift. However, it corrects values on the display based on a pressure value of "0", which is set as the reference value when auto-shift function is selected.

M Differential pressure check mode (F0)

Set and display the differential pressure between CH1 - CH2, and CH3 - CH4.
Selected channel is CH1: Differential pressure between CH1 - CH2 can be set and displayed.
Selected channel is CH2: Measurement value of CH2 can be set and displayed.
Selected channel is CH3: Differential pressure between CH3 - CH4 can be set and displayed.
Selected channel is CH4: Measurement value of CH4 can be set and displayed.

N Channel to channel copy function (F95)

Information that can be copied includes the following:
F0 (system setting): Connected range, displayed unit
F1 (OUT1 setting), F3 (digital filter), F4 (auto-preset), F5 (auto-shift setting), F10 (sub-screen setting), F11 (display resolution setting), F14 (zero-cut setting)

When CH1 is copied to CH2, CH3, and CH4, information on OUT1 in CH1 will be copied.
When CH2 (CH3, or CH4) is copied to CH1, information on OUT1 in CH2 (CH3, or CH4) will be copied only to OUT1 in CH1.

∗ When the channel to channel copy function is used, the copied pressure set value may vary by ±1 digit.
Example) When copying CH1 to another channel

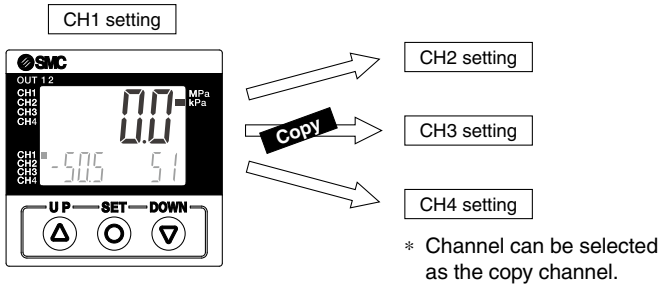

∗ Channel can be selected as the copy channel.

Function Details

O Channel select function

Pressure value for the selected channel is displayed.
The function setting of each channel is performed on the selected channel.

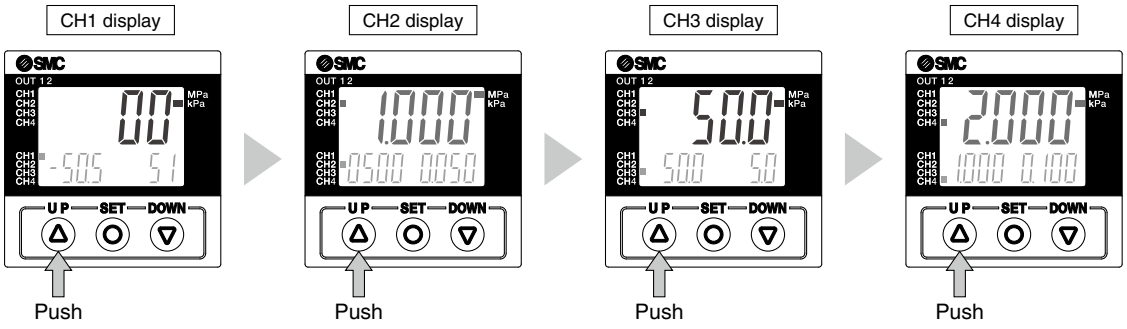

P Channel scan function

Pressure values for each channel are displayed in turn every 2 seconds.

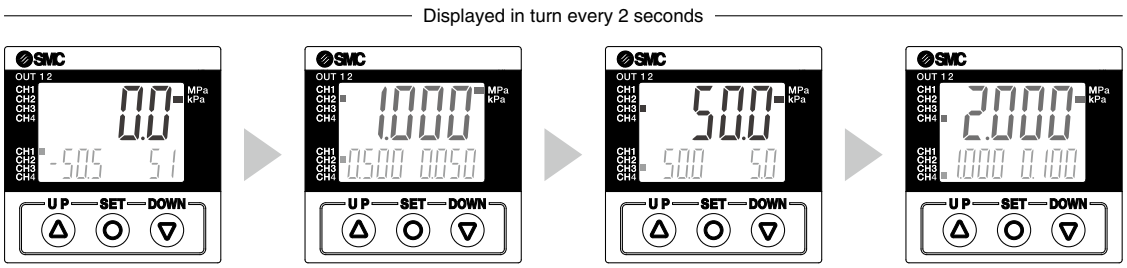

⚠ Safety Instructions

These safety instructions are intended to prevent hazardous situations and/or equipment damage. These instructions indicate the level of potential hazard with the labels of **"Caution," "Warning"** or **"Danger."** They are all important notes for safety and must be followed in addition to International Standards (ISO/IEC)*1), and other safety regulations.

⚠ Caution: **Caution** indicates a hazard with a low level of risk which, if not avoided, could result in minor or moderate injury.

⚠ Warning: **Warning** indicates a hazard with a medium level of risk which, if not avoided, could result in death or serious injury.

⚠ Danger : **Danger** indicates a hazard with a high level of risk which, if not avoided, will result in death or serious injury.

*1) ISO 4414: Pneumatic fluid power – General rules relating to systems.
ISO 4413: Hydraulic fluid power – General rules relating to systems.
IEC 60204-1: Safety of machinery – Electrical equipment of machines.
(Part 1: General requirements)
ISO 10218-1: Manipulating industrial robots – Safety.
etc.

⚠ Warning

1. The compatibility of the product is the responsibility of the person who designs the equipment or decides its specifications.

Since the product specified here is used under various operating conditions, its compatibility with specific equipment must be decided by the person who designs the equipment or decides its specifications based on necessary analysis and test results. The expected performance and safety assurance of the equipment will be the responsibility of the person who has determined its compatibility with the product. This person should also continuously review all specifications of the product referring to its latest catalog information, with a view to giving due consideration to any possibility of equipment failure when configuring the equipment.

2. Only personnel with appropriate training should operate machinery and equipment.

The product specified here may become unsafe if handled incorrectly. The assembly, operation and maintenance of machines or equipment including our products must be performed by an operator who is appropriately trained and experienced.

3. Do not service or attempt to remove product and machinery/ equipment until safety is confirmed.

1. The inspection and maintenance of machinery/equipment should only be performed after measures to prevent falling or runaway of the driven objects have been confirmed.
2. When the product is to be removed, confirm that the safety measures as mentioned above are implemented and the power from any appropriate source is cut, and read and understand the specific product precautions of all relevant products carefully.
3. Before machinery/equipment is restarted, take measures to prevent unexpected operation and malfunction.

4. Contact SMC beforehand and take special consideration of safety measures if the product is to be used in any of the following conditions.

1. Conditions and environments outside of the given specifications, or use outdoors or in a place exposed to direct sunlight.
2. Installation on equipment in conjunction with atomic energy, railways, air navigation, space, shipping, vehicles, military, medical treatment, combustion and recreation, or equipment in contact with food and beverages, emergency stop circuits, clutch and brake circuits in press applications, safety equipment or other applications unsuitable for the standard specifications described in the product catalog.
3. An application which could have negative effects on people, property, or animals requiring special safety analysis.
4. Use in an interlock circuit, which requires the provision of double interlock for possible failure by using a mechanical protective function, and periodical checks to confirm proper operation.

⚠ Caution

1. The product is provided for use in manufacturing industries.

The product herein described is basically provided for peaceful use in manufacturing industries.
If considering using the product in other industries, consult SMC beforehand and exchange specifications or a contract if necessary.
If anything is unclear, contact your nearest sales branch.

Limited warranty and Disclaimer/ Compliance Requirements

The product used is subject to the following "Limited warranty and Disclaimer" and "Compliance Requirements".
Read and accept them before using the product.

Limited warranty and Disclaimer

1. The warranty period of the product is 1 year in service or 1.5 years after the product is delivered, whichever is first.*2)
   Also, the product may have specified durability, running distance or replacement parts. Please consult your nearest sales branch.
2. For any failure or damage reported within the warranty period which is clearly our responsibility, a replacement product or necessary parts will be provided.
   This limited warranty applies only to our product independently, and not to any other damage incurred due to the failure of the product.
3. Prior to using SMC products, please read and understand the warranty terms and disclaimers noted in the specified catalog for the particular products.

*2) **Vacuum pads are excluded from this 1 year warranty.**
A vacuum pad is a consumable part, so it is warranted for a year after it is delivered.
Also, even within the warranty period, the wear of a product due to the use of the vacuum pad or failure due to the deterioration of rubber material are not covered by the limited warranty.

Compliance Requirements

1. The use of SMC products with production equipment for the manufacture of weapons of mass destruction (WMD) or any other weapon is strictly prohibited.
2. The exports of SMC products or technology from one country to another are governed by the relevant security laws and regulations of the countries involved in the transaction. Prior to the shipment of a SMC product to another country, assure that all local rules governing that export are known and followed.

⚠ Caution

SMC products are not intended for use as instruments for legal metrology.

Measurement instruments that SMC manufactures or sells have not been qualified by type approval tests relevant to the metrology (measurement) laws of each country. Therefore, SMC products cannot be used for business or certification ordained by the metrology (measurement) laws of each country.