Compact Cylinder

Series CQS

ø12, ø16, ø20, ø25

Ideal for machine designs with small space requirements

The "D-M9" auto switch will not protrude from switch mounting groove.

Square body shape gives you flexibility for designing machine.

Cross-section of a cylinder tube is the same configuration regardless of w/ switch or w/o switch.

Auto switch mounting allows for flexible designing requirements

3 faces on ø12, ø16, and all 4 faces including port side on ø20, ø25.

2 way basic mounting: Through-hole or both ends tapped

Basic mounting is 2 way. You can choose either through-hole or both ends tapped mounting.

Non-rotating accuracy Non-rotating rod

Hexagonal cross sectional shape piston rod for high non-rotation accuracy.
ø12, ø16 — ±1°
ø20, ø25 — ±0.7°

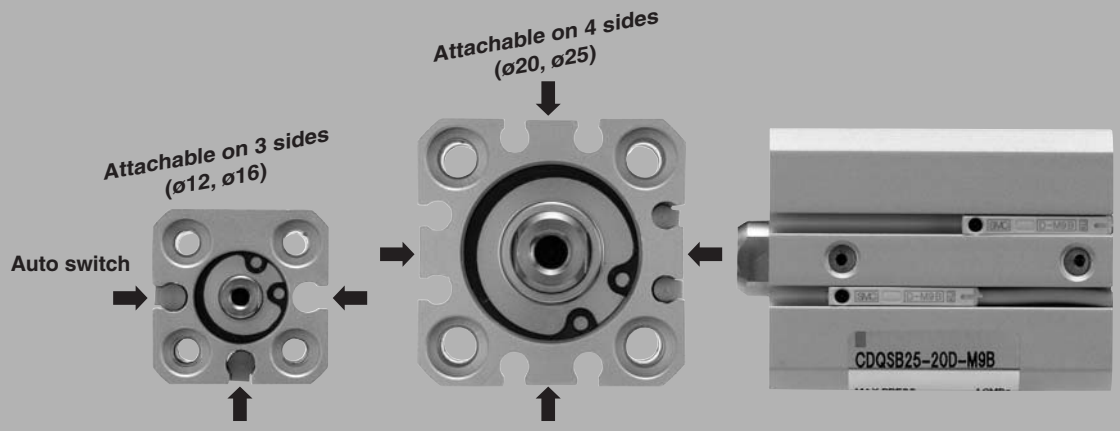

			Bore size (mm)	Stroke (mm)	Page
Standard	Double acting	Single rod CQS	12, 16, 20, 25	Standard stroke: ø12, ø16: 5, 10, 15, 20, 25, 30; ø20, ø25: 5, 10, 15, 20, 25, 30, 35, 40, 45, 50 / Long stroke: ø12, ø16: 35, 40, 45, 50, 75, 100, 125, 150, 175, 200; ø20: 75, 100, 125, 150, 175, 200; ø25: 75, 100, 125, 150, 175, 200, 250, 300	551
		Double rod CQSW		ø12, ø16: 5, 10, 15, 20, 25, 30; ø20, ø25: 5, 10, 15, 20, 25, 30, 35, 40, 45, 50	560
	Single acting	Return/Extend CQS		ø12, ø16, ø20, ø25: 5, 10	567
Non-rotating Rod	Double acting	Single rod CQSK		ø12, ø16: 5, 10, 15, 20, 25, 30; ø20, ø25: 5, 10, 15, 20, 25, 30, 35, 40, 45, 50	575
		Double rod CQSKW			582
Anti-lateral Load	Double acting	Single rod CQS□S		ø12, ø16: 5, 10, 15, 20, 25, 30; ø20, ø25: 5, 10, 15, 20, 25, 30, 35, 40, 45, 50	589

Smooth cylinder (Low friction) CQSY	Refer to Best Pneumatics No. 3.	Low-speed cylinder CQSX	Refer to Best Pneumatics No. 3.

Compact Cylinder: Standard Type
Double Acting, Single Rod

Series CQS

ø12, ø16, ø20, ø25

How to Order

	CQS	B	20	–	30	D		–						
With auto switch	CDQS	B	20	–	30	D		–	M9BW		–			

With auto switch
(Built-in magnet)

Mounting style

B	Through-hole/Both ends tapped common (Standard)
L	Foot style
F	Rod side flange style
G	Head side flange style
D	Double clevis style

In the case of long strokes, use either ends tapped mounting or bracket mounting.
Mounting brackets are shipped together, (but not assembled).
Cylinder mounting bolts are not included. Order them separately referring to "Mounting Bolt for CQS" on pages 556 and 557.

Bore size

12	12 mm
16	16 mm
20	20 mm
25	25 mm

Cylinder stroke (mm)

Bore size	Standard stroke	Long stroke
12, 16	5, 10, 15, 20, 25, 30	35, 40, 45, 50, 75, 100, 125, 150, 175, 200
20	5, 10, 15, 20, 25, 30, 35, 40, 45, 50	75, 100, 125, 150, 175, 200
25		75, 100, 125, 150, 175, 200, 250, 300

For "Manufacture of Intermediate Strokes", refer to page 552.

Action

D	Double acting

Body option

<Standard stroke>

Nil	Standard
C	With rubber bumper
M	Rod end male thread
F	Boss on head side

Combination of body options is available.

<Long stroke>

C	With rubber bumper Rod end female thread (Standard)
CM	With rubber bumper Rod end male thread

Rubber bumper is standard equipment for long stroke type.

Auto switch

Nil	Without auto switch

Refer to the table below for the applicable auto switch model.

Number of auto switches

Nil	2 pcs.
S	1 pc.
n	"n" pcs.

Made to Order
Refer to page 552 for details.

Built-in Magnet Cylinder Model

If a built-in magnet cylinder without an auto switch is required, there is no need to enter the symbol for the auto switch.
(Example) CDQSL25-30D

Applicable Auto Switch/

Refer to pages 1263 to 1371 for further information on auto switches.

Type	Special function	Electrical entry	Indicator light	Wiring (Output)	Load voltage DC		Load voltage AC	Auto switch model Perpendicular	Auto switch model In-line	Lead wire length (m) 0.5 (Nil)	1 (M)	3 (L)	5 (Z)	Pre-wired connector	Applicable load	
Solid state switch	—	Grommet	Yes	3-wire (NPN)	24 V	5 V, 12 V	—	M9NV	M9N	●	●	●	○	○	IC circuit	Relay, PLC
				3-wire (PNP)				M9PV	M9P	●	●	●	○	○		
				2-wire		12 V		M9BV	M9B	●	●	●	○	○	—	
	Diagnostic indication (2-color indication)			3-wire (NPN)		5 V, 12 V		M9NWV	M9NW	●	●	●	○	○	IC circuit	
				3-wire (PNP)				M9PWV	M9PW	●	●	●	○	○		
				2-wire		12 V		M9BWV	M9BW	●	●	●	○	○	—	
	Water resistant (2-color indication)			3-wire (NPN)		5 V, 12 V		M9NAV	M9NA	○	○	●	○	○	IC circuit	
				3-wire (PNP)				M9PAV	M9PA	○	○	●	○	○		
				2-wire		12 V		M9BAV	M9BA	○	○	●	○	○	—	
Reed switch	—	Grommet	Yes	3-wire (NPN equivalent)	—	5 V	—	A96V	A96	●	—	●	—	—	IC circuit	—
			No	2-wire	24 V	12 V	100 V	A93V	A93	●	—	●	—	—	—	Relay, PLC
							100 V or less	A90V	A90	●	—	●	—	—	IC circuit	

Lead wire length symbols: 0.5 m····· Nil (Example) M9NW
1 m····· M (Example) M9NWM
3 m····· L (Example) M9NWL
5 m····· Z (Example) M9NWZ

Solid state auto switches marked with " " are produced upon receipt of order.

Since there are other applicable auto switches than listed, refer to page 597 for details.
For details about auto switches with pre-wired connector, refer to pages 1328 and 1329.
Auto switches are shipped together (not assembled).

Note) There is the case A9 V/M9 V/M9 WV/M9 AVL type auto switches cannot be mounted on the port surface, depending on the cylinder's stroke and the fitting size for piping. Consult with SMC for details.



Specifications

Bore size (mm)		12	16	20	25
Action		Double acting, Single rod			
Fluid		Air			
Lubrication		Not required (Non-lube)			
Proof pressure		1.5 MPa			
Maximum operating pressure		1.0 MPa			
Minimum operating pressure		0.07 MPa		0.05 MPa	
Ambient and fluid temperature		Without auto switch: –10 to 70 C (No freezing)			
		With auto switch: –10 to 60 C (No freezing)			
Cushion		None, Rubber bumper			
Rod end thread		Female thread			
Stroke length tolerance		Standard stroke: $^{+1.0}_{0}$ Long stroke: $^{+1.4}_{0}$			
Mounting		Through-hole/Both ends tapped common			
Piston speed		50 to 500 mm/s			
Allowable kinetic energy (J)	Standard type	0.022	0.038	0.055	0.09
	With rubber bumper	0.043	0.075	0.11	0.18

Stroke length tolerance does not include the deflection of the bumper.
Only rubber bumper is available for the long stroke type.

JIS Symbol

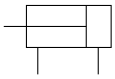

Made to Order Specifications

(For details, refer to pages 1373 to 1565.)

Symbol	Specifications
–XA	Change of rod end shape
–XB6	Heat-resistant cylinder (–10 to 150 C) (without an auto switch)
–XB7	Cold-resistant cylinder (–40 to 70 C) (without an auto switch)
–XB9	Low speed cylinder (10 to 50 mm/s)
–XB10	Intermediate stroke (Using exclusive body)
–XB13	Low speed cylinder (5 to 50 mm/s)
–XC6	Piston rod, retaining ring, rod end nut made of stainless steel
–XC8	Adjustable stroke cylinder/Adjustable extension type
–XC9	Adjustable stroke cylinder/Adjustable retraction type
–XC10	Dual stroke cylinder/Double rod type
–XC11	Dual stroke cylinder/Single rod type
–XC36	With boss in rod side
–X271	Fluororubber seals
–X525	Long stroke of adjustable extension stroke cylinder (-XC8)
–X526	Long stroke of adjustable retraction stroke cylinder (-XC9)
–X636	Long stroke of dual stroke single rod
–X1876	With concave shape end boss on the cylinder tube head side

Body Option

Description	Application
Rod end male thread	Available for all standard models of double acting, single rod.
Rubber bumper	

Rubber bumper is standard equipment for long stroke type.

Theoretical Output



(N)

Bore size (mm)	Rod size (mm)	Operating direction	Piston area (mm^2)	Operating pressure (MPa)		
				0.3	0.5	0.7
12	6	IN	84.8	25	42	59
		OUT	113	34	57	79
16	8	IN	151	45	75	106
		OUT	201	60	101	141
20	10	IN	236	71	118	165
		OUT	314	94	157	220
25	12	IN	378	113	189	264
		OUT	491	147	245	344

Manufacture of Intermediate Stroke

Description		Spacer is installed in the standard stroke body.		Exclusive body (**-XB10**)	
Part no.		Refer to "How to Order" for the standard model no. (page 551).		Suffix "-XB10" to the end of standard model no. (page 551).	
Standard stroke	Description	Intermediate strokes by the 1 mm interval are available by using spacers with standard stroke cylinders.		Dealing with the stroke by the 1 mm interval by using an exclusive body with the specified stroke.	
	Stroke range	Bore size	Stroke range	Bore size	Stroke range
		12, 16	1 to 29	12, 16	6 to 29
		20, 25	1 to 49	20, 25	6 to 49
Long stroke	Description	Intermediate strokes by the 1 mm interval are available by using spacers with standard stroke cylinders.		Dealing with the stroke by the 1 mm interval by using an exclusive body with the specified stroke.	
	Stroke range	Bore size	Stroke range	Bore size	Stroke range
		12, 16	31 to 199	12, 16	31 to 199
		20	51 to 199	20	51 to 199
		25	51 to 299	25	51 to 299
Example		Part no.: CQSB25-47D CQSB25-50D with 3 mm width spacer inside. B dimension is 72.5 mm.		Part no.: CQSB25-47D-XB10 Makes 47 stroke tube. B dimension is 69.5 mm.	

Refer to pages 595 to 597 for cylinders with auto switches.

- Minimum auto switch mounting stroke
- Proper auto switch mounting position (detection at stroke end) and mounting height
- Operating range
- Switch mounting bracket/Part no.

(800) 660-0733

Mass/Without Auto Switch

(g)

Bore size (mm)	Cylinder stroke (mm)																	
	5	10	15	20	25	30	35	40	45	50	75	100	125	150	175	200	250	300
12	29	36	42	49	56	63	93	100	107	113	147	180	213	246	279	312	—	—
16	38	47	56	64	73	82	119	128	136	145	187	229	271	313	355	397	—	—
20	63	75	88	101	114	127	140	153	166	178	306	370	434	498	562	627	—	—
25	91	107	123	139	155	171	186	202	218	234	399	478	557	636	715	794	952	1110

For standard stroke

Calculation: (Example) **CQSD20-20DCM**

- Cylinder mass: CQSB20-20D····· 101 g
- Option mass: Rod end male thread····· 10 g
- Option mass: Rubber bumper····· −2 g
- Option mass: Double clevis style····· 92 g

201 g

Mass/With Auto Switch (Built-in magnet)

(g)

Bore size (mm)	Cylinder stroke (mm)																	
	5	10	15	20	25	30	35	40	45	50	75	100	125	150	175	200	250	300
12	37	43	50	57	63	70	94	101	108	114	148	181	214	247	280	313	—	—
16	48	57	66	74	83	92	121	129	137	146	188	231	273	315	357	399	—	—
20	93	106	119	132	144	157	170	182	195	208	311	375	439	503	567	632	—	—
25	134	150	166	182	197	213	229	245	261	277	406	485	564	643	721	800	958	1116

Additional Mass

(g)

Bore size (mm)		**12**	**16**	**20**	**25**
Rod end male thread	Male thread	1.5	3	6	12
	Nut	1	2	4	8
Rubber bumper * (No need to add for long stroke)		0	1	–2	–3
Foot style (Including mounting bolt)		55 (53)	65 (61)	159 (153)	181 (172)
Rod side flange style (Including mounting bolt)		58 (56)	70 (66)	143 (137)	180 (171)
Head side flange style (Including mounting bolt)		56	66	137	171
Double clevis style (Including pin, snap ring, bolt)		34	40	92	127

( ): denotes the values of long stroke model.

Mounting Bracket Part No.

Bore size (mm)	Foot (1)	Flange	Double clevis
12	CQS-L012	CQS-F012	CQS-D012
16	CQS-L016	CQS-F016	CQS-D016
20	CQS-L020	CQS-F020	CQS-D020
25	CQS-L025	CQS-F025	CQS-D025

Note1) When ordering foot bracket, order 2 pieces per cylinder.
Note2) Parts belonging to each bracket are as follows.
Foot or Flange style: Body mounting bolt
Double clevis style: Clevis pin, Type C snap ring for axis, Body mounting bolt.

Copper and Fluorine-free Series (For CRT manufacturing process)

20 — C(D)QS [Mounting] [Bore size] — [Stroke] D(C)(M)

- **Copper and Fluorine-free Series**
- **Bore size: ø12, ø16, ø20, ø25**

To prevent the influence of copper ions or halogen ions during CRT manufacturing processes, copper and fluorine materials are not used in the component parts.

Specifications

Action	Double acting, Single rod
Bore size (mm)	12, 16, 20, 25
Proof pressure	1.5 MPa
Maximum operating pressure	1.0 MPa
Cushion	None, Rubber bumper
Mounting	Through-hole/Both ends tapped common
Piston speed	50 to 500 mm/s

Clean Series (Standard stroke is only available.)

10 — C(D)QSB Bore size — Stroke D(M)

Clean Series

10	Relief type
11	Vacuum type

The type which is applicable for using inside the clean room graded Class 100 by making an actuator's rod section a double seal construction and discharging by relief port directly to the outside of clean room.

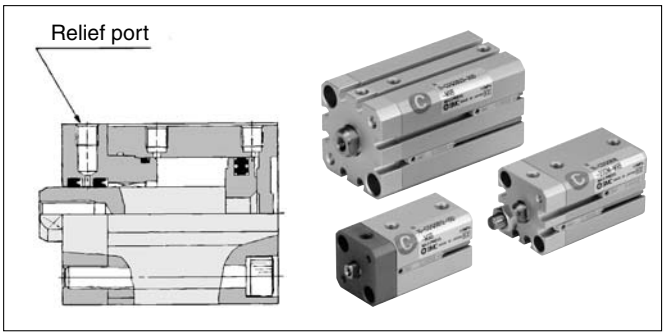

For details, refer to the separate catalog "Pneumatic Clean Series".

Specifications

Action	Double acting, Single rod
Bore size (mm)	ø12, ø16, ø20, ø25
Proof pressure	1.5 MPa
Maximum operating pressure	1.0 MPa
Rubber bumper	None
Piping	Screw-in piping
Piston speed	30 to 400 mm/s
Mounting	Through-hole/Both ends tapped common
Auto switch	Mountable

Note) For details, please contact SMC.

Smooth Cylinder

CQS Y Mounting Bore size — Stroke D(C)(M)

Smooth Cylinder

Smooth operation with a little sticking and slipping at low speed.
Dual-side low friction operation is possible.



Refer to Best Pneumatics No. 3.

Specifications

Bore size (mm)	12	16	20	25
Type	Pneumatic (Non-lube)			
Action	Double acting, Single rod			
Fluid	Air			
Proof pressure	1.05 MPa			
Maximum operating pressure	0.7 MPa			
Ambient and fluid temperature	Without auto switch: –10 to 70°C (No freezing)			
	With auto switch: –10 to 60°C (No freezing)			
Cushion	None, Rubber bumper*			
Rod end thread	Female thread			
Stroke length tolerance	$^{+1.0}_{0}$*			
Mounting	Through-hole/Both ends tapped common			
Piston speed	50 to 500 mm/s			
Allowable leakage	0.5ℓ/min (ANR) or less			

* Stroke length tolerance does not include the deflection of the bumper.

Minimum operating pressure (MPa)

Bore size (mm)	12	16	20	25
Minimum operating pressure	0.03		0.02	

Low-speed Cylinder

CQS X Mounting Bore size — Stroke D(C)(M)

Low-speed Cylinder

Smooth operation with a little sticking and slipping at low speed.
Can start smoothly with a little ejection even after being rendered for hours.

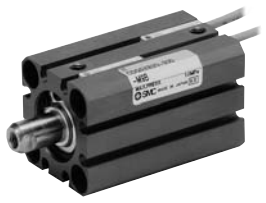

Refer to Best Pneumatics No. 3.

Specifications

Bore size (mm)	12	16	20	25
Type	Pneumatic (Non-lube)			
Action	Double acting, Single rod			
Fluid	Air			
Proof pressure	1.5 MPa			
Maximum operating pressure	1.0 MPa			
Ambient and fluid temperature	Without auto switch: –10 to 70°C With auto switch: –10 to 60°C (No freezing)			
Rubber bumper	None, Rubber bumper*			
Rod end thread	Female thread			
Stroke length tolerance	Standard stroke $^{+1.0}_{0}$			
Mounting	Through-hole/Both ends tapped common			
Piston speed	ø12, ø16: 1 to 300 mm/s ø20, ø25: 0.5 to 300 mm/s			

* Stroke length tolerance does not include the deflection of the bumper.

Minimum operating pressure (MPa)

	12	16	20	25
Minimum operating pressure	0.03	0.03	0.025	0.025

Construction

Basic style

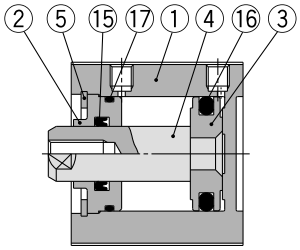

With rubber bumper

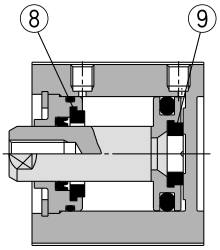

With auto switch (Built-in magnet)

ø12, ø16

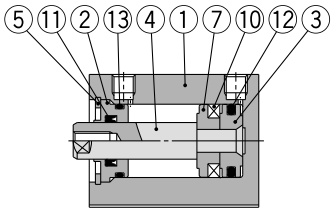

Rod end male thread

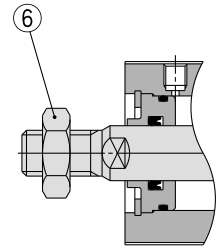

Long stroke

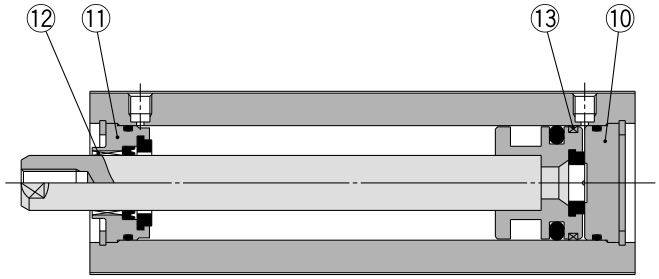

ø20, ø25

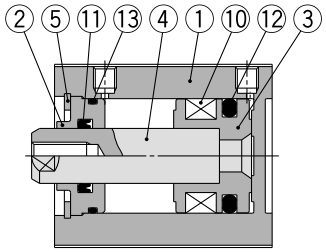

Component Parts

No.	Description	Material	Note
1	**Cylinder tube**	Aluminum alloy	Hard anodized
2	**Collar**	Aluminum alloy	Anodized
3	**Piston**	Aluminum alloy	Chromated
4	**Piston rod**	Stainless steel	
5	**Retaining ring**	Carbon tool steel	Phosphate coated
6	**Rod end nut**	Carbon steel	Nickel plated
7	**Spacer for switch type**	Aluminum alloy	Chromated
8	**Bumper A**	Urethane	
9	**Bumper B**	Urethane	
10	**Bottom plate**	Aluminum alloy	Anodized

Component Parts

No.	Description	Material	Note
11	**Collar**	Aluminum alloy	Anodized
12	**Bushing**	Oil-impregnated sintered alloy	
13	**Wear ring**	Resin	
14	**Magnet**	—	
15 *	**Rod seal**	NBR	
16 *	**Piston seal**	NBR	
17 *	**Tube gasket**	NBR	

Replacement Parts: Seal Kit (Basic style)

Bore size (mm)	Kit no.	Contents
12	CQSB12-PS	Set of nos. above ⑮, ⑯, ⑰
16	CQSB16-PS	
20	CQSB20-PS	
25	CQSB25-PS	

Replacement Parts: Seal Kit (Long stroke)

Bore size (mm)	Kit no.	Contents
12	CQSB12-L-PS	Set of nos. above ⑮, ⑯, ⑰
16	CQSB16-L-PS	
20	CQSB20-L-PS	
25	CQSB25-L-PS	

* Seal kit includes ⑮, ⑯, ⑰. Order the seal kit, based on each bore size. (The long stroke type includes 2 tube gaskets.)
* Since the seal kit does not include a grease pack, order it separately.
Grease pack part no.: GR-S-010 (10 g)

Mounting Bolt for CQS without Auto Switch

Mounting method: Mounting bolt for through-hole mounting style of CQSB is available as an option.

Ordering: Add the word “Bolt” in front of the bolts to be used.

Example) Bolt M3 x 25L 4 pcs.

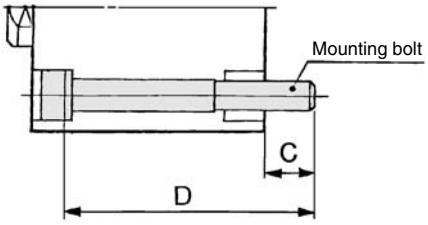

Note 1) The appropriate plain washer must be used for through-hole mounting.

Note 2) Please contact SMC for details concerning the mounting bolts to be used with ø12 and ø16 that exceed 30 mm strokes, or ø20 and ø25 that exceed 50 mm strokes.

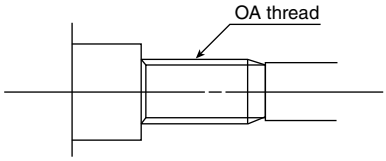

Cylinder model	C	D	Mounting bolt size
CQSB12–5D	6.5	25	M3 x 25L
–10D		30	x 30L
–15D		35	x 35L
–20D		40	x 40L
–25D		45	x 45L
–30D		50	x 50L
–35DC	Secure the cylinder by using the OA screws that are provided with the cylinder tube.		
–40DC			
–45DC			
–50DC			
–75DC			
–100DC			
–125DC			
–150DC			
–175DC			
–200DC			
CQSB16–5D	6.5	25	M3 x 25L
–10D		30	x 30L
–15D		35	x 35L
–20D		40	x 40L
–25D		45	x 45L
–30D		50	x 50L
–35DC	Secure the cylinder by using the OA screws that are provided with the cylinder tube.		
–40DC			
–45DC			
–50DC			
–75DC			
–100DC			
–125DC			
–150DC			
–175DC			
–200DC			

Cylinder model	C	D	Mounting bolt size
CQSB20–5D	6.5	25	M5 x 25L
–10D		30	x 30L
–15D		35	x 35L
–20D		40	x 40L
–25D		45	x 45L
–30D		50	x 50L
–35D		55	x 55L
–40D		60	x 60L
–45D		65	x 65L
–50D		70	x 70L
–75DC	Secure the cylinder by using the OA screws that are provided with the cylinder tube.		
–100DC			
–125DC			
–150DC			
–175DC			
–200DC			
CQSB25–5D	8.5	30	M5 x 30L
–10D		35	x 35L
–15D		40	x 40L
–20D		45	x 45L
–25D		50	x 50L
–30D		55	x 55L
–35D		60	x 60L
–40D		65	x 65L
–45D		70	x 70L
–50D		75	x 75L
–75DC	Secure the cylinder by using the OA screws that are provided with the cylinder tube.		
–100DC			
–125DC			
–150DC			
–175DC			
–200DC			
–250DC			
–300DC			

Material: Chromium molybdenum steel
Surface treatment: Nickel plated

Mounting Bolt for CDQS with Auto Switch

Mounting method: Mounting bolt for through-hole mounting style of CDQSB is available as an option.
Ordering: Add the word "Bolt" in front of the bolts to be used.

Example) Bolt M3 x 30L 4 pcs.

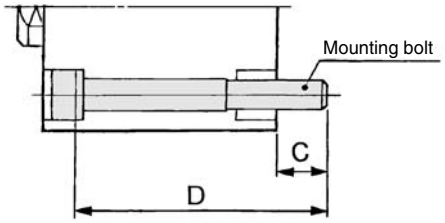

Note 1) The appropriate plain washer must be used for through-hole mounting.
Note 2) Please contact SMC for details concerning the mounting bolts to be used with ø12 and ø16 that exceed 30 mm strokes, or ø20 and ø25 that exceed 50 mm strokes.

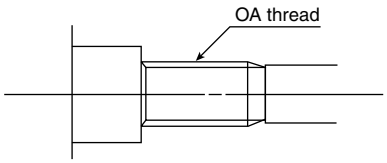

Accessory

For accessory bracket for **Series CQS**, refer to page 620, since it is commonly used with **Series CQ2**.

- Single knuckle joint
- Double knuckle joint
- Pin for knuckle
- Rod end nut

Cylinder model	C	D	Mounting bolt size
CDQSB12–5D	6.5	30	M3 x 30L
–10D		35	x 35L
–15D		40	x 40L
–20D		45	x 45L
–25D		50	x 50L
–30D		55	x 55L
–35DC	Secure the cylinder by using the OA screws that are provided with the cylinder tube.		
–40DC			
–45DC			
–50DC			
–75DC			
–100DC			
–125DC			
–150DC			
–175DC			
–200DC			
CDQSB16–5D	6.5	30	M3 x 30L
–10D		35	x 35L
–15D		40	x 40L
–20D		45	x 45L
–25D		50	x 50L
–30D		55	x 55L
–35DC	Secure the cylinder by using the OA screws that are provided with the cylinder tube.		
–40DC			
–45DC			
–50DC			
–75DC			
–100DC			
–125DC			
–150DC			
–175DC			
–200DC			

Cylinder model	C	D	Mounting bolt size
CDQSB20–5D	6.5	35	M5 x 35L
–10D		40	x 40L
–15D		45	x 45L
–20D		50	x 50L
–25D		55	x 55L
–30D		60	x 60L
–35D		65	x 65L
–40D		70	x 70L
–45D		75	x 75L
–50D		80	x 80L
–75DC	Secure the cylinder by using the OA screws that are provided with the cylinder tube.		
–100DC			
–125DC			
–150DC			
–175DC			
–200DC			
CDQSB25–5D	8.5	40	M5 x 40L
–10D		45	x 45L
–15D		50	x 50L
–20D		55	x 55L
–25D		60	x 60L
–30D		65	x 65L
–35D		70	x 70L
–40D		75	x 75L
–45D		80	x 80L
–50D		85	x 85L
–75DC	Secure the cylinder by using the OA screws that are provided with the cylinder tube.		
–100DC			
–125DC			
–150DC			
–175DC			
–200DC			
–250DC			
–300DC			

Material: Chromium molybdenum steel
Surface treatment: Nickel plated

Dimensions: ø12 to ø25

Basic style (Through-hole/Both ends tapped common): CQSB/CDQSB

* For the auto switch mounting position and its mounting height, refer to page 595.

ø12

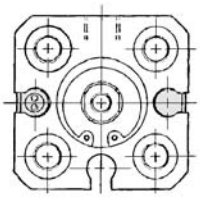

ø16

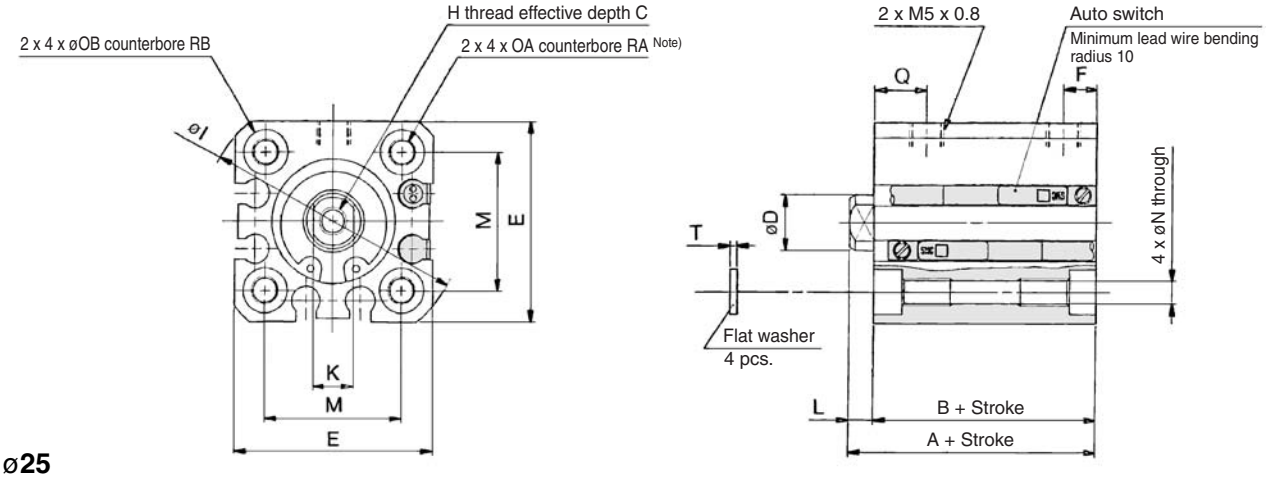

ø20, ø25

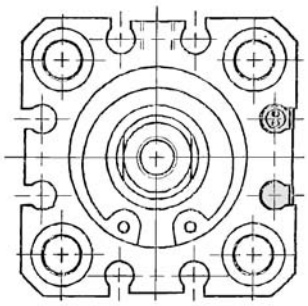

Rod end male thread

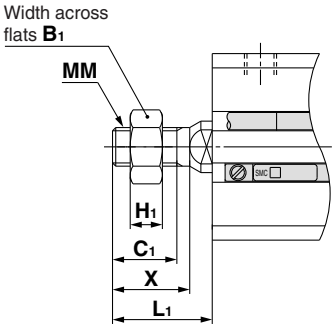

• Length with intermediate stroke
(1) Spacer ··· The dimensions will be identical to those of the nearest long stroke. Those that exceed the standard stroke will have the long stroke dimensions.
(2) Exclusive body (-XB10)····Add stroke. Also, the stroke length that exceeds the standard stroke would be the long stroke dimension.

Rod End Male Thread

Bore size (mm)	B_1	C_1	H_1	Standard stroke L_1	Long stroke L_1	MM	X
12	8	9	4	14	24	M5 x 0.8	10.5
16	10	10	5	15.5	25.5	M6 x 1.0	12
20	13	12	5	18.5	28.5	M8 x 1.25	14
25	17	15	6	22.5	32.5	M10 x 1.25	17.5

Basic Style

Bore size (mm)	Standard stroke range (mm)	Standard stroke								Long stroke range (mm)	Long stroke				C	D	E	H	I	K	M	N	OA	OB	Q	RA	RB	T
		Without auto switch				With auto switch					With/Without auto switch																	
		A	B	F	L	A	B	F	L		A	B	F	L														
12	5 to 30	20.5	17	5	3.5	25.5	22	5	3.5	35 to 200	45.5	32	7.5	13.5	6	6	25	M3 x 0.5	32	5	15.5	3.5	M4 x 0.7	6.5	7.5	7	4	0.5
16	5 to 30	20.5	17	5	3.5	25.5	22	5	3.5	35 to 200	45.5	32	7.5	13.5	8	8	29	M4 x 0.7	38	6	20	3.5	M4 x 0.7	6.5	7.5	7	4	0.5
20	5 to 50	24	19.5	5.5	4.5	34	29.5	5.5	4.5	75 to 200	55.5	41	9	14.5	7	10	36	M5 x 0.8	47	8	25.5	5.4	M6 x 1.0	9	9	10	7	1
25	5 to 50	27.5	22.5	5.5	5	37.5	32.5	5.5	5	75 to 300	59	44	11	15	12	12	40	M6 x 1.0	52	10	28	5.4	M6 x 1.0	9	11	10	7	1

Note 1) For the following bore/stroke sizes through-hole is threaded over the entire length: Basic style ø12 and ø16; 5 stroke, ø20; 5 to 15 stroke, ø25; 5 to 10 stroke, ø20 with auto switch built-in magnet; 5 stroke.
Note 2) Rubber bumper type has the same dimensions as those indicated above.
* For details about the rod end nut and accessory brackets, refer to page 620.

Foot style: CQSL/CDQSL

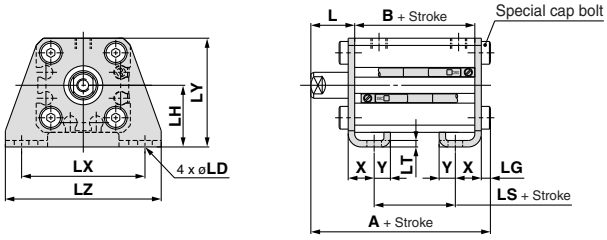

Rod end male thread

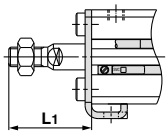

Foot Style

Bore size (mm)	Standard stroke range (mm)	Standard stroke						Long stroke range (mm)	Long stroke		
		Without auto switch			With auto switch				Without/With auto switch		
		A	B	LS	A	B	LS		A	B	LS
12	5 to 30	35.3	17	5	40.3	22	10	35 to 200	50.3	32	20
16	5 to 30	35.3	17	5	40.3	22	10	35 to 200	50.3	32	20
20	5 to 50	41.2	19.5	7.5	51.2	29.5	17.5	75 to 200	62.7	41	29
25	5 to 50	44.7	22.5	7.5	54.7	32.5	17.5	75 to 300	66.2	44	29

Bore size (mm)	L	L1	LD	LG	LH	LT	LX	LY	LZ	X	Y
12	13.5	24	4.5	2.8	17	2	34	29.5	44	8	4.5
16	13.5	25.5	4.5	2.8	19	2	38	33.5	48	8	5
20	14.5	28.5	6.6	4	24	3.2	48	42	62	9.2	5.8
25	15	32.5	6.6	4	26	3.2	52	46	66	10.7	5.8

Foot bracket material: Carbon steel
Surface treatment: Nickel plated

Rod side flange style: CQSF/CDQSF

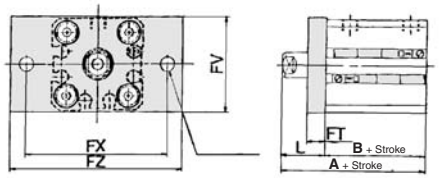

Rod end male thread

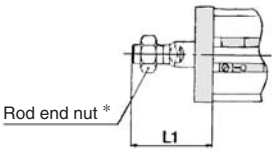

Rod Side Flange Style

Bore size (mm)	Standard stroke range (mm)	Standard stroke				Long stroke range (mm)	Long stroke	
		Without auto switch		With auto switch			Without/With auto switch	
		A	B	A	B		A	B
12	5 to 30	30.5	17	35.5	22	35 to 200	45.5	32
16	5 to 30	30.5	17	35.5	22	35 to 200	45.5	32
20	5 to 50	34	19.5	44	29.5	75 to 200	55.5	41
25	5 to 50	37.5	22.5	47.5	32.5	75 to 300	59	44

Bore size (mm)	FD	FT	FV	FX	FZ	L	L1
12	4.5	5.5	25	45	55	13.5	24
16	4.5	5.5	30	45	55	13.5	25.5
20	6.6	8	39	48	60	14.5	28.5
25	6.6	8	42	52	64	15	32.5

Flange bracket material: Carbon steel
Surface treatment: Nickel plated

Head side flange style: CQSG/CDQSG

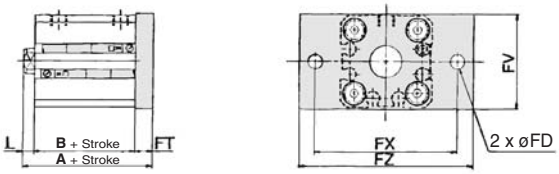

Rod end male thread

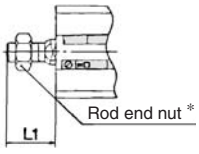

Head Side Flange Style

Bore size (mm)	Standard stroke range (mm)	Standard stroke								Long stroke range (mm)	Long stroke			
		Without auto switch				With auto switch					Without/With auto switch			
		A	B	L	L1	A	B	L	L1		A	B	L	L1
12	5 to 30	26	17	3.5	14	31	22	3.5	14	35 to 200	51	32	13.5	24
16	5 to 30	26	17	3.5	15.5	31	22	3.5	15.5	35 to 200	51	32	13.5	25.5
20	5 to 50	32	19.5	4.5	18.5	42	29.5	4.5	18.5	75 to 200	63.5	41	14.5	28.5
25	5 to 50	35.5	22.5	5	22.5	45.5	32.5	5	22.5	75 to 300	67	44	15	32.5

Bore size (mm)	FD	FT	FV	FX	FZ
12	4.5	5.5	25	45	55
16	4.5	5.5	30	45	55
20	6.6	8	39	48	60
25	6.6	8	42	52	64

Flange bracket material: Carbon steel
Surface treatment: Nickel plated

Double clevis style: CQSD/CDQSD

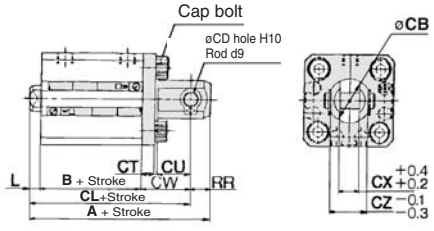

Rod end male thread

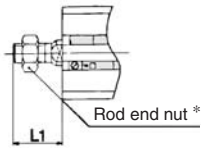

Double Cevis Style

Bore size (mm)	Standard stroke range (mm)	Standard stroke										Long stroke range (mm)	Long stroke				
		Without auto switch					With auto switch						Without/With auto switch				
		A	B	CL	L	L1	A	B	CL	L	L1		A	B	CL	L	L1
12	5 to 30	40.5	17	34.5	3.5	14	45.5	22	39.5	3.5	14	35 to 200	65.5	32	59.5	13.5	24
16	5 to 30	41.5	17	35.5	3.5	15.5	46.5	22	40.5	3.5	15.5	35 to 200	66.5	32	60.5	13.5	25.5
20	5 to 50	51	19.5	42	4.5	18.5	61	29.5	52	4.5	18.5	75 to 200	82.5	41	73.5	14.5	28.5
25	5 to 50	57.5	22.5	47.5	5	22.5	67.5	32.5	57.5	5	22.5	75 to 300	89	44	79	15	32.5

Bore size (mm)	CB	CD	CT	CU	CW	CX	CZ	RR
12	12	5	4	7	14	5	10	6
16	14	5	4	10	15	6.5	12	6
20	20	8	5	12	18	8	16	9
25	24	10	5	14	20	10	20	10

Double clevis bracket material: Carbon steel
Surface treatment: Nickel plated

∗ For details about the rod end nut and accessory brackets, refer to page 620.

Compact Cylinder: Standard Type
Double Acting, Double Rod
Series CQSW
ø12, ø16, ø20, ø25

How to Order

CQSW **B** **20** – **30** **D** **C** – ☐

With auto switch: CDQSW **B** **20** – **30** **D** **C** – **M9BW** ☐ – ☐

With auto switch
(Built-in magnet)

Mounting style

B	Through-hole/Both ends tapped common (Standard)
L	Foot style
F	Flange style

∗ Mounting brackets are shipped together, (but not assembled).
∗ Cylinder mounting bolts are not included. Order them separately referring to "Mounting Bolt for CQSW" on page 564.

Bore size

12	12 mm
16	16 mm
20	20 mm
25	25 mm

Cylinder stroke (mm)

Standard Stroke

Bore size (mm)	Standard stroke (mm)
12, 16	5, 10, 15, 20, 25, 30
20, 25	5, 10, 15, 20, 25, 30, 35, 40, 45, 50

For "Manufacture of Intermediate Strokes", refer to page 561.

Action

D	Double acting

Body option

Nil	Standard
C	With rubber bumper
M	Rod end male thread

∗ Combination of body options is available.

Auto switch

Nil	Without auto switch

∗ Refer to the table below for the applicable auto switch model.

Number of auto switches

Nil	2 pcs.
S	1 pc.
n	"n" pcs.

Made to Order
Refer to page 561 for details.

Built-in Magnet Cylinder Model

If a built-in magnet cylinder without an auto switch is required, there is no need to enter the symbol for the auto switch.
(Example) CDQSWL25-30D

Applicable Auto Switch/Refer to pages 1263 to 1371 for further information on auto switches.

Type	Special function	Electrical entry	Indicator light	Wiring (Output)	Load voltage DC	Load voltage DC	Load voltage AC	Auto switch model: Perpendicular	Auto switch model: In-line	Lead wire length (m): 0.5 (Nil)	1 (M)	3 (L)	5 (Z)	Pre-wired connector	Applicable load	
Solid state switch	—	Grommet	Yes	3-wire (NPN)	24 V	5 V, 12 V	—	**M9NV**	**M9N**	●	●	●	○	○	IC circuit	Relay, PLC
				3-wire (PNP)				**M9PV**	**M9P**	●	●	●	○	○		
				2-wire		12 V		**M9BV**	**M9B**	●	●	●	○	○	—	
	Diagnostic indication (2-color indication)			3-wire (NPN)		5 V, 12 V		**M9NWV**	**M9NW**	●	●	●	○	○	IC circuit	
				3-wire (PNP)				**M9PWV**	**M9PW**	●	●	●	○	○		
				2-wire		12 V		**M9BWV**	**M9BW**	●	●	●	○	○	—	
	Water resistant (2-color indication)			3-wire (NPN)		5 V, 12 V		**M9NAV**	**M9NA**	○	○	●	○	○	IC circuit	
				3-wire (PNP)				**M9PAV**	**M9PA**	○	○	●	○	○		
				2-wire		12 V		**M9BAV**	**M9BA**	○	○	●	○	○	—	
Reed switch	—	Grommet	Yes	3-wire (NPN equivalent)	—	5 V	—	**A96V**	**A96**	●	—	●	—	—	IC circuit	—
			No	2-wire	24 V	12 V	100 V	**A93V**	**A93**	●	—	●	—	—	—	Relay, PLC
							100 V or less	**A90V**	**A90**	●	—	●	—	—	IC circuit	

∗ Lead wire length symbols: 0.5 m····· Nil (Example) M9NW
1 m····· M (Example) M9NWM
3 m····· L (Example) M9NWL
5 m····· Z (Example) M9NWZ

∗ Solid state auto switches marked with "○" are produced upon receipt of order.

∗ Since there are other applicable auto switches than listed, refer to page 597 for details.
∗ For details about auto switches with pre-wired connector, refer to pages 1328 and 1329.
∗ Auto switches are shipped together (not assembled).
Note) There is the case A9□V/M9□V/M9□WV/M9□AVL type auto switches cannot be mounted on the port surface, depending on the cylinder's stroke and the fitting size for piping. Consult with SMC for details.



JIS Symbol

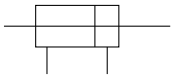

Specifications

Bore size (mm)		12	16	20	25
Action		Double acting, Double rod			
Fluid		Air			
Lubrication		Not required (Non-lube)			
Proof pressure		1.5 MPa			
Maximum operating pressure		1.0 MPa			
Minimum operating pressure		0.07 MPa		0.05 MPa	
Ambient and fluid temperature		Without auto switch: –10 to 70°C (No freezing)			
		With auto switch: –10 to 60°C (No freezing)			
Cushion		None, Rubber bumper			
Rod end thread		Female thread			
Stroke length tolerance		$^{+1.0}_{0}$ mm *			
Mounting		Through-hole/Both ends tapped common			
Piston speed		50 to 500 mm/s			
Allowable kinetic energy (J)	Standard type	0.022	0.038	0.055	0.09
	With rubber bumper	0.043	0.075	0.11	0.18

* Stroke length tolerance does not include the deflection of the bumper.

Made to Order Specifications

(For details, refer to pages 1373 to 1565.)

Symbol	Specifications
–XA□	Change of rod end shape
–XB6	Heat-resistant cylinder (–10 to 150 °C) (without an auto switch)
–XB7	Cold-resistant cylinder (–40 to 70 °C) (without an auto switch)
–XB9	Low speed cylinder (10 to 50 mm/s)
–XB10	Intermediate stroke (Using exclusive body)
–XB13	Low speed cylinder (5 to 50 mm/s)
–XC6	Piston rod, retaining ring, rod end nut made of stainless steel
–XC36	With boss in rod side
–X235	Change of piston rod end of double rod cylinder
–X271	Fluororubber seals
–X633	Intermediate stroke of double rod cylinder

Theoretical Output

(N)

Bore size (mm)	Rod size (mm)	Operating direction	Piston area (mm^2)	Operating pressure (MPa)		
				0.3	0.5	0.7
12	6	IN	84.8	25	42	59
		OUT				
16	8	IN	151	45	75	106
		OUT				
20	10	IN	236	71	118	165
		OUT				
25	12	IN	378	113	189	264
		OUT				

Body Option

Description	Application
Rod end male thread	Available for all standard models of double acting, double rod.
Rubber bumper	

Mounting Bracket Part No.

Bore size (mm)	Foot (1)	Flange
12	CQS-L012	CQS-F012
16	CQS-L016	CQS-F016
20	CQS-L020	CQS-F020
25	CQS-L025	CQS-F025

Note 1) When ordering foot bracket, order 2 pieces per cylinder.
Note 2) Parts belonging to each bracket are as follows.
Foot or Flange style: Body mounting bolt

Manufacture of Intermediate Stroke

Description	Spacer is installed in the standard stroke body.		Exclusive body (**-XB10**)	
Part no.	Suffix "-X633" to the end of standard model no. (page 560).		Suffix "-XB10" to the end of standard model no. (page 560).	
Description	Intermediate strokes by the 1 mm interval are available by using spacers with standard stroke cylinders.		Dealing with the stroke by the 1 mm interval by using an exclusive body with the specified stroke.	
Stroke range	Bore size	Stroke range	Bore size	Stroke range
	12, 16	1 to 29	12, 16	1 to 29
	20, 25	1 to 49	20, 25	1 to 49
Example	Part no.: CQSWB25-47D-X633 CQSWB25-50D with 3 mm width spacer inside. B dimension is 79 mm.		Part no.: CQSWB25-47D-XB10 Makes 47 stroke tube. B dimension is 76 mm.	

Refer to pages 595 to 597 for cylinders with auto switches.

- Minimum auto switch mounting stroke
- Proper auto switch mounting position (detection at stroke end) and mounting height
- Operating range
- Switch mounting bracket/Part no.

Mass/Without Auto Switch

(g)

Bore size (mm)	Cylinder stroke (mm)									
	5	10	15	20	25	30	35	40	45	50
12	38	46	54	62	69	77	–	–	–	–
16	50	61	71	81	92	102	–	–	–	–
20	89	104	120	136	152	167	183	199	215	231
25	127	146	166	186	206	227	247	267	287	308

Mass/With Auto Switch (Built-in magnet)

(g)

Bore size (mm)	Cylinder stroke (mm)									
	5	10	15	20	25	30	35	40	45	50
12	46	54	62	70	77	85	–	–	–	–
16	60	71	81	91	102	112	–	–	–	–
20	119	134	150	166	182	198	214	230	245	261
25	154	174	195	215	235	255	276	296	316	336

Additional Mass

(g)

Bore size (mm)		**12**	**16**	**20**	**25**
Rod end male thread	Male thread	3	6	12	24
	Nut	2	4	8	16
With rubber bumper		0	–1	–2	–2
Foot style (Including mounting bolt)		55	65	159	181
Rod side flange style (Including mounting bolt)		58	70	143	180

Calculation: (Example) **CQSWF12-10DM**
- Cylinder mass: CQSWB12-10D····· 46 g
- Option mass: Rod end male thread····· 5 g
  : Rod side flange style····· 58 g

109 g

⚠Caution

Retaining Ring Installation/Removal

1. For installation and removal, use an appropriate pair of pliers (tool for installing a type C retaining ring).
2. Even if a proper plier (tool for installing type C retaining ring) is used, it is likely to inflict damage to a human body or peripheral equipment, as a retaining ring may be flown out of the tip of a plier (tool for installing a type C retaining ring). Be much careful with the popping of a retaining ring. Besides, be certain that a retaining ring is placed firmly into the groove of rod cover before supplying air at the time of installment.

⚠Warning

Mounting

Do not apply the reverse torque to the piston rods sticking out from both sides of this cylinder at the same time. The torque makes connection threads inside loosen, which may cause an accident or malfunction.
Install or remove a load while the piston rod width across flats are secured. Do not fix the other side of piston rod width across flat and apply the reverse torque.

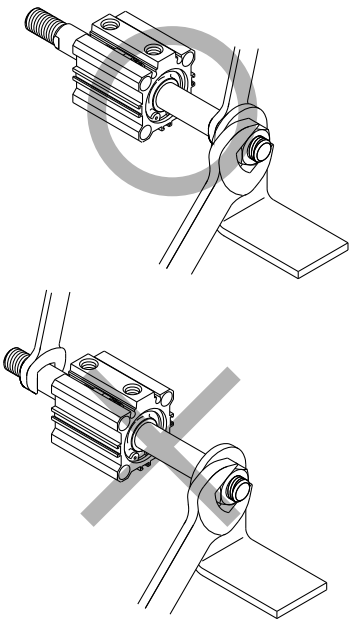

Construction

Basic style

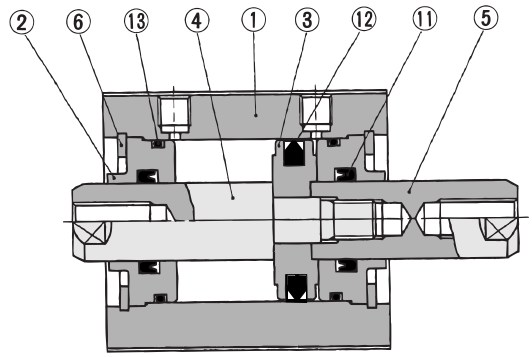

With rubber bumper

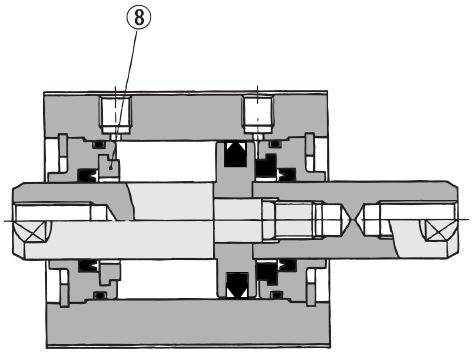

With auto switch (Built-in magnet)

ø12, ø16

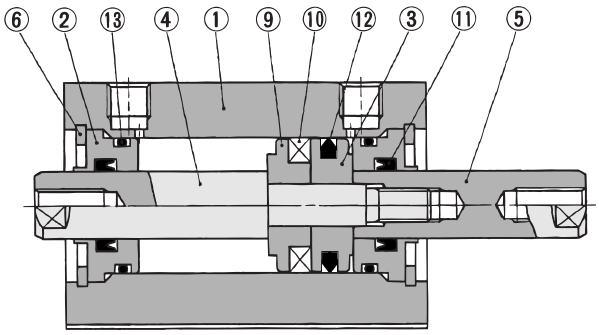

ø20, ø25

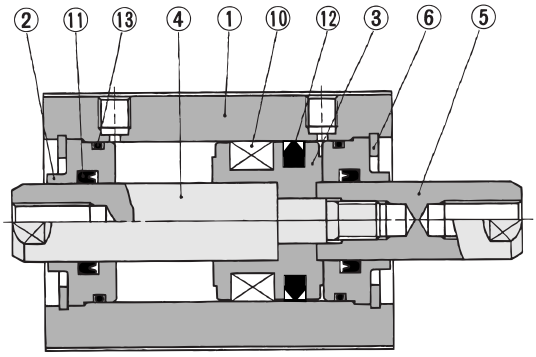

Component Parts

No.	Description	Material	Note
1	**Cylinder tube**	Aluminum alloy	Hard anodized
2	**Collar**	Aluminum alloy	Anodized
3	**Piston**	Aluminum alloy	Chromated
4	**Piston rod A**	Stainless steel	
5	**Piston rod B**	Stainless steel	
6	**Retaining ring**	Carbon tool steel	Phosphate coated
7	**Rod end nut**	Carbon steel	Nickel plated
8	**Bumper**	Urethane	
9	**Spacer for switch**	Aluminum alloy	Chromated
10	**Magnet**	—	
11	**Rod seal**	NBR	
12	**Piston seal**	NBR	
13	**Tube gasket**	NBR	

Rod end male thread

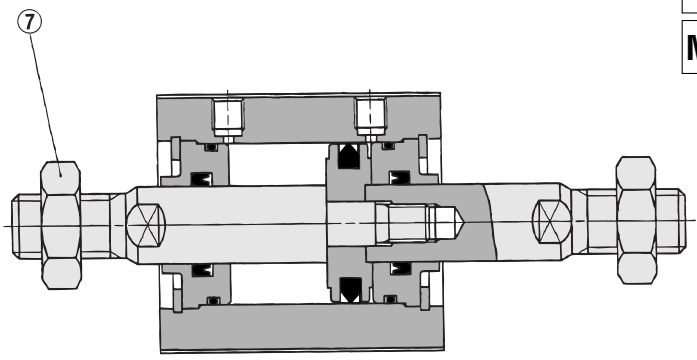

Replacement Parts/Seal Kit

Bore size (mm)	Kit no.	Contents
12	CQSWB12-PS	Set of nos. above ⑪, ⑫, ⑬
16	CQSWB16-PS	
20	CQSWB20-PS	
25	CQSWB25-PS	

∗ Seal kit includes ⑪, ⑫, ⑬. Order the seal kit, based on each bore size.
∗ Since the seal kit does not include a grease pack, order it separately.
Grease pack part no.: GR-S-010 (10 g)

Mounting Bolt for CQSW

Mounting method: Mounting bolt for through-hole mounting style of CQSW is available as an option.
Ordering: Add the word "Bolt" in front of the bolts to be used.

Example) Bolt M3 x 30L 4 pcs.

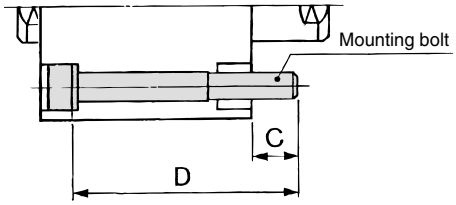

Note) When mounting a cylinder with through-hole, be sure to use the attached plain washer.

Cylinder model	C	D	Mounting bolt size
CQSWB12-5D	6.5	30	M3 x 30L
-10D		35	x 35L
-15D		40	x 40L
-20D		45	x 45L
-25D		50	x 50L
-30D		55	x 55L
CQSWB16-5D	6.5	30	M3 x 30L
-10D		35	x 35L
-15D		40	x 40L
-20D		45	x 45L
-25D		50	x 50L
-30D		55	x 55L
CQSWB20-5D	10	35	M5 x 35L
-10D		40	x 40L
-15D		45	x 45L
-20D		50	x 50L

Cylinder model	C	D	Mounting bolt size
CQSWB20-25D	10	55	M5 x 55L
-30D		60	x 60L
-35D		65	x 6L
-40D		70	x 70L
-45D		75	x 75L
-50D		80	x 80L
CQSWB25-5D	7	35	M5 x 35L
-10D		40	x 40L
-15D		45	x 45L
-20D		50	x 50L
-25D		55	x 55L
-30D		60	x 60L
-35D		65	x 65L
-40D		70	x 70L
-45D		75	x 75L
-50D		80	x 80L

Material: Chromium molybdenum steel
Surface treatment: Nickel plated

Mounting Bolt for CDQSW with Auto Switch

Mounting method: Mounting bolt for through-hole mounting style of CDQSW is available as an option.
Ordering: Add the word "Bolt" in front of the bolts to be used.

Example) Bolt M3 x 35L 4 pcs.

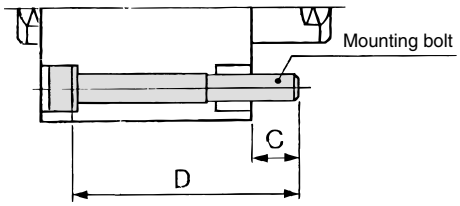

Note) When mounting a cylinder with through-hole, be sure to use the attached plain washer.

Cylinder model	C	D	Mounting bolt size
CDQSWB12-5D	6.5	35	M3 x 35L
-10D		40	x 40L
-15D		45	x 45L
-20D		50	x 50L
-25D		55	x 55L
-30D		60	x 60L
CDQSWB16-5D	6.5	35	M3 x 35L
-10D		40	x 40L
-15D		45	x 45L
-20D		50	x 50L
-25D		55	x 55L
-30D		60	x 60L
CDQSWB20-5D	10	45	M5 x 45L
-10D		50	x 50L
-15D		55	x 55L
-20D		60	x 60L

Cylinder model	C	D	Mounting bolt size
CDQSWB20-25D	10	65	M5 x 65L
-30D		70	x 70L
-35D		75	x 75L
-40D		80	x 80L
-45D		85	x 85L
-50D		90	x 90L
CDQSWB25-5D	7	45	M5 x 45L
-10D		50	x 50L
-15D		55	x 55L
-20D		60	x 60L
-25D		65	x 65L
-30D		70	x 70L
-35D		75	x 75L
-40D		80	x 80L
-45D		85	x 85L
-50D		90	x 90L

Material: Chromium molybdenum steel
Surface treatment: Nickel plated

Dimensions: ø12 to ø25

Basic style (Through-hole/Both ends tapped common): CQSWB/CDQSWB

ø12

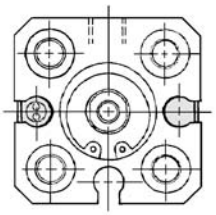

ø16

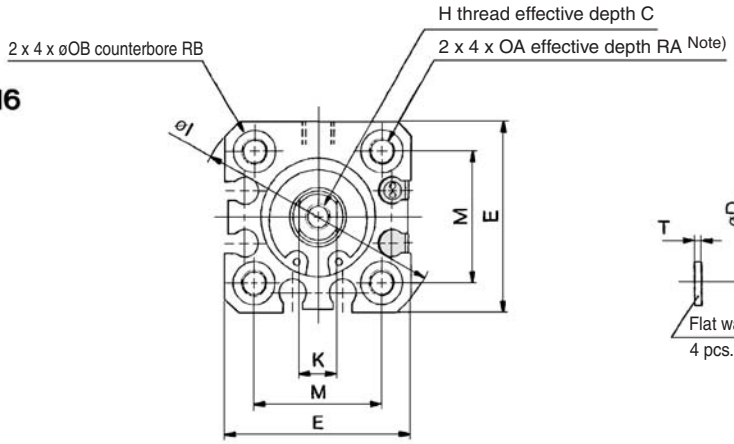

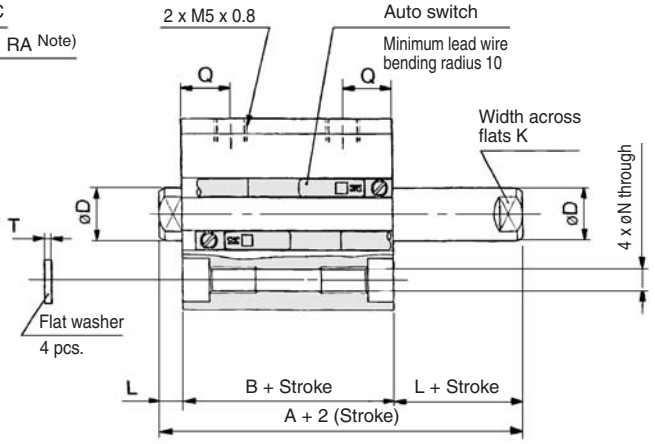

ø20, ø25

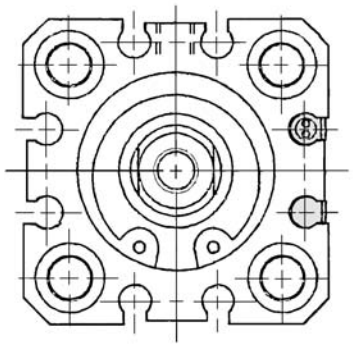

Rod end male thread

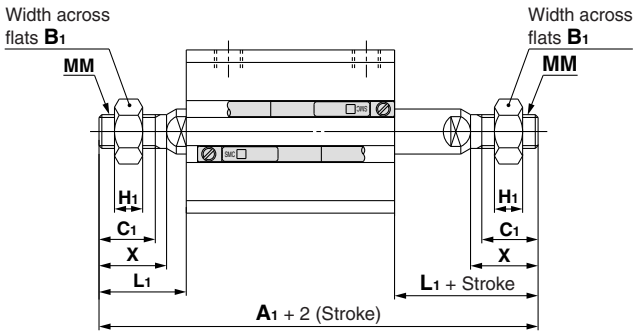

Rod End Male Thread

Bore size (mm)	Without auto switch A1	With auto switch A1	B1	C1	H1	L1	MM	X
12	50	55	8	9	4	14	M5 x 0.8	10.5
16	53	58	10	10	5	15.5	M6 x 1.0	12
20	63	73	13	12	5	18.5	M8 x 1.25	14
25	74	84	17	15	6	22.5	M10 x 1.25	17.5

Basic Style

Bore size (mm)	Stroke range (mm)	Without auto switch A	Without auto switch B	With auto switch A	With auto switch B	C	D	E	H	I	K	L	M	N	OA	OB	Q	RA	RB	T
12	5 to 30	29	22	34	27	6	6	25	M3 x 0.5	32	5	3.5	15.5	3.5	M4 x 0.7	6.5	7.5	7	4	0.5
16	5 to 30	29	22	34	27	8	8	29	M4 x 0.7	38	6	3.5	20	3.5	M4 x 0.7	6.5	7.5	7	4	0.5
20	5 to 50	35	26	45	36	7	10	36	M5 x 0.8	47	8	4.5	25.5	5.4	M6 x 1.0	9	9	10	7	1
25	5 to 50	39	29	49	39	12	12	40	M6 x 1.0	52	10	5	28	5.4	M6 x 1.0	9	11	10	7	1

Note 1) For basic style ø20 and ø25 with 5 stroke, through-hole is threaded over the entire length.
Note 2) Rubber bumper type has the same dimensions as those indicated above
Note 3) The positions of width across flats on both sides are not the same.
∗ For details about the rod end nut and accessory brackets, refer to page 620.

Dimensions: ø12 to ø25

Foot style: CQSWL/CDQSWL

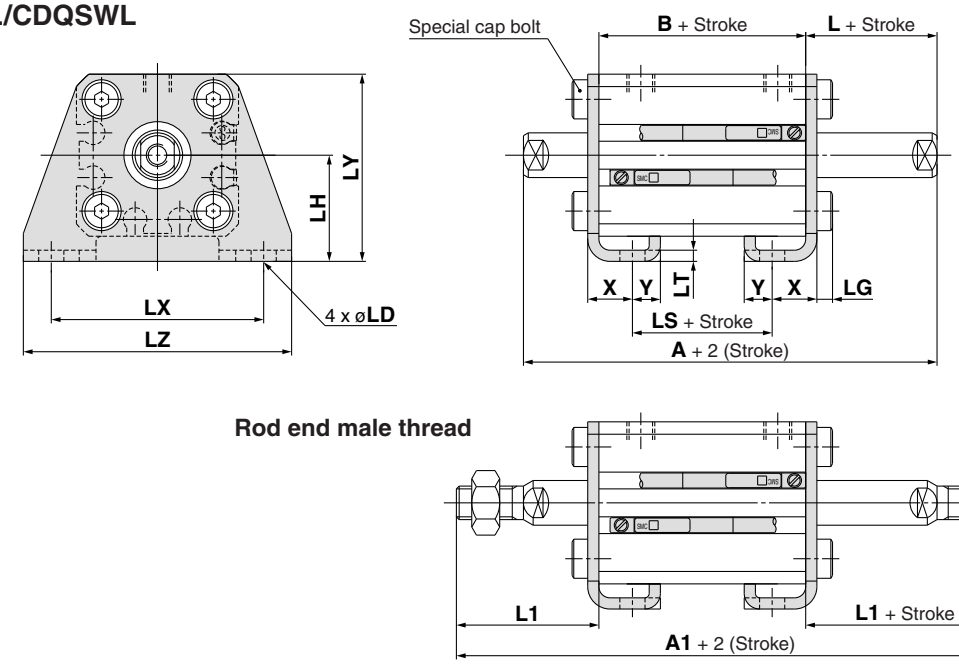

Rod end male thread

Foot Style

Bore size (mm)	Stroke range (mm)	Without auto switch				With auto switch				L	L1	LD	LG	LH	LT	LX	LY	LZ	X	Y
		A	A1	B	LS	A	A1	B	LS											
12	5 to 30	49	70	22	10	54	75	27	15	13.5	24	4.5	2.8	17	2	34	29.5	44	8	4.5
16	5 to 30	49	73	22	10	54	78	27	15	13.5	25.5	4.5	2.8	19	2	38	33.5	48	8	5
20	5 to 50	55	83	26	14	65	93	36	24	14.5	28.5	6.6	4	24	3.2	48	42	62	9.2	5.8
25	5 to 50	59	94	29	14	69	104	39	24	15	32.5	6.6	4	26	3.2	52	46	66	10.7	5.8

Foot bracket material: Carbon steel
Surface treatment: Nickel plated

Flange style: CQSWF/CDQSWF

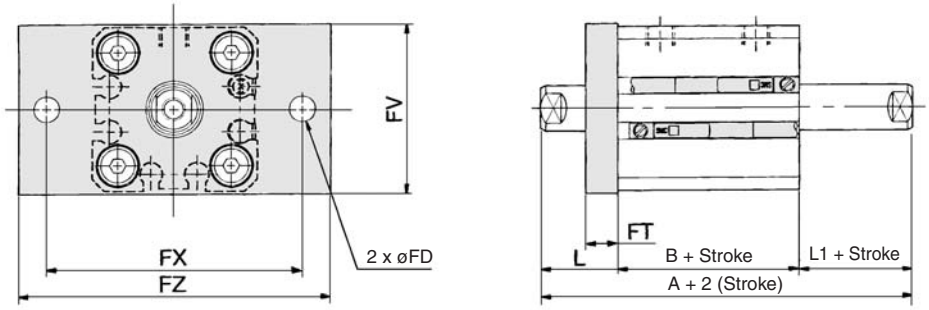

Rod end male thread

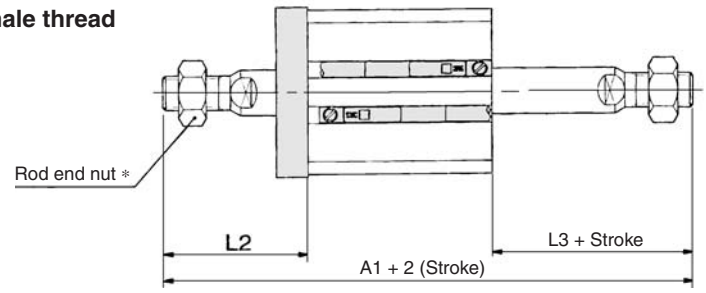

Flange Style

Bore size (mm)	Stroke range (mm)	Without auto switch			With auto switch			FD	FT	FV	FX	FZ	L	L1	L2	L3
		A	A1	B	A	A1	B									
12	5 to 30	39	60	22	44	65	27	4.5	5.5	25	45	55	13.5	3.5	24	14
16	5 to 30	39	63	22	44	68	27	4.5	5.5	30	45	55	13.5	3.5	25.5	15.5
20	5 to 50	45	73	26	55	83	36	6.6	8	39	48	60	14.5	4.5	28.5	18.5
25	5 to 50	49	84	29	59	94	39	6.6	8	42	52	64	15	5	32.5	22.5

∗ For details about the rod end nut and accessory brackets, refer to page 620.
Note 1) The positions of width across flats on both sides are not the same.

Flange bracket material: Carbon steel
Surface treatment: Nickel plated

Compact Cylinder: Standard Type
Single Acting, Single Rod
Series CQS
ø12, ø16, ø20, ø25

How to Order

CQS B 20 – 10 S □ – □

With auto switch **CDQS B 20 – 10 S □ – M9BW □ – □**

With auto switch
(Built-in magnet)

Mounting style

B	Through-hole/Both ends tapped common (Standard)
L	Foot style
F	Rod side flange style
G	Head side flange style
D	Double clevis style

∗ Mounting brackets are shipped together, (but not assembled).
∗ Cylinder mounting bolts are not included. Order them separately referring to "Mounting Bolt for CQS" on page 569.

Bore size

12	12 mm
16	16 mm
20	20 mm
25	25 mm

Cylinder stroke (mm)

Standard Stroke

Bore size (mm)	Standard stroke (mm)
12, 16, 20, 25	5, 10

For "Manufacture of Intermediate Strokes", refer to page 568.

Action

S	Single acting, Spring return
T	Single acting, Spring extend

Body option

Nil	Standard (Rod end female thread)
M	Rod end male thread
F	Boss on head side

Auto switch

Nil	Without auto switch

∗ Refer to the table below for the applicable auto switch model.

Number of auto switches

Nil	2 pcs.
S	1 pc.
n	"n" pcs.

Made to Order
Refer to page 568 for details.

Built-in Magnet Cylinder Model

If a built-in magnet cylinder without an auto switch is required, there is no need to enter the symbol for the auto switch.
(Example) CDQSL25-10T

Applicable Auto Switch/Refer to pages 1263 to 1371 for further information on auto switches.

Type	Special function	Electrical entry	Indicator light	Wiring (Output)	Load voltage DC		Load voltage AC	Auto switch model: Perpendicular	Auto switch model: In-line	Lead wire length (m): 0.5 (Nil)	1 (M)	3 (L)	5 (Z)	Pre-wired connector	Applicable load	
Solid state switch	—	Grommet	Yes	3-wire (NPN)	24 V	5 V, 12 V	—	**M9NV**	**M9N**	●	●	●	○	○	IC circuit	Relay, PLC
				3-wire (PNP)				**M9PV**	**M9P**	●	●	●	○	○		
				2-wire		12 V		**M9BV**	**M9B**	●	●	●	○	○	—	
	Diagnostic indication (2-color indication)			3-wire (NPN)		5 V, 12 V		**M9NWV**	**M9NW**	●	●	●	○	○	IC circuit	
				3-wire (PNP)				**M9PWV**	**M9PW**	●	●	●	○	○		
				2-wire		12 V		**M9BWV**	**M9BW**	●	●	●	○	○	—	
	Water resistant (2-color indication)			3-wire (NPN)		5 V, 12 V		**M9NAV**	**M9NA**	○	○	●	○	○	IC circuit	
				3-wire (PNP)				**M9PAV**	**M9PA**	○	○	●	○	○		
				2-wire		12 V		**M9BAV**	**M9BA**	○	○	●	○	○	—	
Reed switch	—	Grommet	Yes	3-wire (NPN equivalent)	—	5 V	—	**A96V**	**A96**	●	—	●	—	—	IC circuit	—
			No	2-wire	24 V	12 V	100 V	**A93V**	**A93**	●	—	●	—	—	—	Relay, PLC
							100 V or less	**A90V**	**A90**	●	—	●	—	—	IC circuit	

∗ Lead wire length symbols: 0.5 m····· Nil (Example) M9NW
1 m····· M (Example) M9NWM
3 m····· L (Example) M9NWL
5 m····· Z (Example) M9NWZ

∗ Solid state auto switches marked with "○" are produced upon receipt of order.

∗ Since there are other applicable auto switches than listed, refer to page 597 for details.
∗ For details about auto switches with pre-wired connector, refer to pages 1328 and 1329.
∗ Auto switches are shipped together (not assembled).
Note) There is the case A9□V/M9□V/M9□WV/M9□AVL type auto switches cannot be mounted on the port surface, depending on the cylinder's stroke and the fitting size for piping. Consult with SMC for details.



JIS Symbol

Single acting, Spring return



Single acting, Spring extend

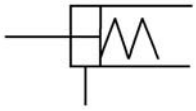

Made to Order Specifications

(For details, refer to pages 1373 to 1498 and 1508.)

Symbol	Specifications
–XA□	Change of rod end shape
–XB10	Intermediate stroke (Using exclusive body), Extension type only
–XC6	Piston rod, retaining ring, rod end nut made of stainless steel
–XC36	With boss on rod side, ø12 and ø16 only
–X271	Fluororubber seals
–X1876	With concave shape end boss on the cylinder tube head side

Body Option

Description	Application
Rod end male thread	Available for all standard models of single acting, single rod.

Mounting Bracket Part No.

Bore size (mm)	Foot (1)	Flange	Double clevis
12	CQS-L012	CQS-F012	CQS-D012
16	CQS-L016	CQS-F016	CQS-D016
20	CQS-L020	CQS-F020	CQS-D020
25	CQS-L025	CQS-F025	CQS-D025

Note 1) When ordering foot bracket, order 2 pieces per cylinder.
Note 2) Parts belonging to each bracket are as follows.
Foot or Flange style: Body mounting bolt
Double clevis style: Clevis pin, Type C retaining ring for axis, Body mounting bolt.

Standard Specifications

Bore size (mm)	12	16	20	25
Action	Single acting, Single rod			
Fluid	Air			
Lubrication	Not required (Non-lube)			
Proof pressure	1.5 MPa			
Maximum operating pressure	1.0 MPa			
Minimum operating pressure	0.25 MPa		0.18 MPa	
Ambient and fluid temperature	Without auto switch: –10 to 70°C (No freezing)			
	With auto switch: –10 to 60°C (No freezing)			
Cushion	None			
Rod end thread	Female thread			
Stroke length tolerance	$^{+1.0}_{0}$ mm			
Mounting	Through-hole/Both ends tapped common			
Piston speed	50 to 500 mm/s			
Allowable kinetic energy (J)	0.022	0.038	0.055	0.09

Theoretical Output

(N)

Action	Bore size (mm)	Rod size (mm)	Operating direction	Piston area (mm^2)	Operating pressure (MPa) 0.3	0.5	0.7	Retracted side	Extended side
Spring return	**12**	6	IN	–	20	43	65	14	4
			OUT	113					
	16	8	IN	–	45	86	126	15	6
			OUT	201					
	20	10	IN	–	78	141	204	15	6
			OUT	314					
	25	12	IN	–	126	224	323	21	11
			OUT	491					
Spring extend	**12**	6	IN	84.8	14	31	48	10	3
			OUT	–					
	16	8	IN	151	24	54	85	19	4
			OUT	–					
	20	10	IN	236	44	91	138	27	5
			OUT	–					
	25	12	IN	378	84	160	235	29	10
			OUT	–					

Manufacture of Intermediate Stroke (Single acting, Spring retract type is excluded.)

Description	Spacer is installed in the standard stroke body.	
Part no.	Refer to "How to Order" for the standard model no. (page 567).	
Description	Intermediate strokes by the 1 mm interval are available by using spacers with standard stroke cylinders.	
Stroke range	Bore size	Stroke range
	12 to 25	1 to 9
Example	Part no.: CQSB20-3T CQSB20-5T with 2 mm width spacer inside. B dimension is 24.5 mm.	

Refer to pages 595 to 597 for cylinders with auto switches.

- Minimum auto switch mounting stroke
- Proper auto switch mounting position (detection at stroke end) and mounting height
- Operating range
- Switch mounting bracket/Part no.

Mass/Without Auto Switch
Spring return (Spring extend) (g)

Bore size (mm)	Cylinder stroke (mm)	
	5	10
12	29 (31)	36 (37)
16	39 (39)	48 (47)
20	63 (68)	76 (79)
25	92 (98)	108 (113)

∗ ( ): Denotes the values of spring extend.

Mass/With Auto Switch (Built-in magnet)
Spring return (Spring extend) (g)

Bore size (mm)	Cylinder stroke (mm)	
	5	10
12	37 (39)	44 (45)
16	49 (51)	58 (59)
20	94 (104)	107 (115)
25	130 (150)	146 (165)

∗( ): Denotes the values of spring extend.

Additional Mass (g)

Bore size (mm)		**12**	**16**	**20**	**25**
Rod end male thread	Male thread	1.5	3	6	12
	Nut	1	2	4	8
Foot style (Including mounting bolt)		55	65	159	181
Rod side flange style (Including mounting bolt)		58	70	143	180
Head side flange style (Including mounting bolt)		56	66	137	171
Double clevis style (Including pin, retaining ring, bolt)		34	40	92	127

Calculation: (Example) **CQSG16-10S**
• Cylinder mass: CQSB16-10S····· 48 g
• Option mass: Head side flange style····· 66 g
114 g

⚠Caution

Retaining Ring Installation/Removal

1. For installation and removal, use an appropriate pair of pliers (tool for installing a type C retaining ring).
2. Even if a proper plier (tool for installing type C retaining ring) is used, it is likely to inflict damage to a human body or peripheral equipment, as a retaining ring may be flown out of the tip of a plier (tool for installing a type C retaining ring). Be much careful with the popping of a retaining ring. Besides, be certain that a retaining ring is placed firmly into the groove of rod cover before supplying air at the time of installment.

Mounting Bolt for CQS without Auto Switch

Mounting method: Mounting bolt for through-hole mounting style of CQS is available as an option.
Ordering: Add the word "Bolt" in front of the bolts to be used.

Example) Bolt M3 x 25L 4 pcs.

Single acting, Spring return

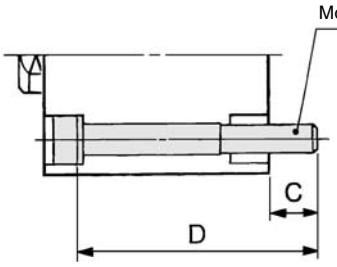

Single acting, Spring extend

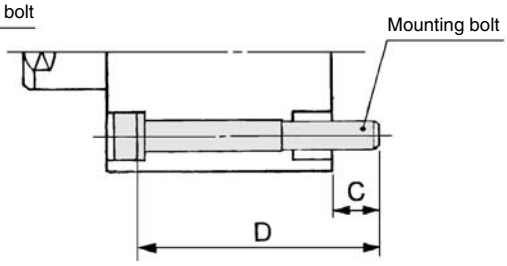

Note) When mounting a cylinder with through-hole, be sure to use the attached plain washer.

Single Acting, Spring Return

Cylinder model	C	D	Mounting bolt size
CQSB12-5S	6.5	25	M3 x 25L
-10S		30	x 30L
CQSB16-5S	6.5	25	M3 x 25L
-10S		30	x 30L
CQSB20-5S	6.5	25	M5 x 25L
-10S		30	x 30L
CQSB25-5S	8.5	30	M5 x 30L
-10S		35	x 35L

Single Acting, Spring Extend

Cylinder model	C	D	Mounting bolt size
CQSB12-5T	6.5	25	M3 x 25L
-10T		30	x 30L
CQSB16-5T	6.5	25	M3 x 25L
-10T		30	x 30L
CQSB20-5T	6.5	25	M5 x 25L
-10T		30	x 30L
CQSB25-5T	8.5	30	M5 x 30L
-10T		35	x 35L

Material: Chromium molybdenum steel
Surface treatment: Nickel plated

Mounting Bolt for CDQS with Auto Switch

Mounting method: Mounting bolt for through-hole mounting style of CDQS is available as an option.
Ordering: Add the word "Bolt" in front of the bolts to be used.

Example) Bolt M3 x 30L 4 pcs.

Single acting, Spring return

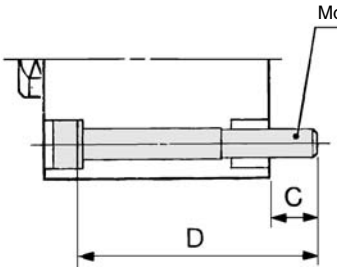

Single acting, Spring extend

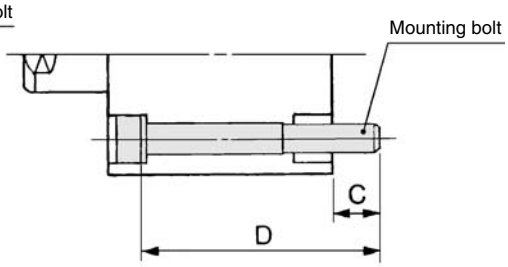

Note) When mounting a cylinder with through-hole, be sure to use the attached plain washer.

Single Acting, Spring Return

Cylinder model	C	D	Mounting bolt size
CDQSB12-5S	6.5	30	M3 x 30L
-10S		35	x 35L
CDQSB16-5S	6.5	30	M3 x 30L
-10S		35	x 35L
CDQSB20-5S	6.5	35	M5 x 35L
-10S		40	x 40L
CDQSB25-5S	8.5	40	M5 x 40L
-10S		45	45L

Single Acting, Spring Extend

Cylinder model	C	D	Mounting bolt size
CDQSB12-5T	6.5	30	M3 x 30L
-10T		35	x 35L
CDQSB16-5T	6.5	30	M3 x 30L
-10T		35	x 35L
CDQSB20-5T	6.5	35	M5 x 35L
-10T		40	x 40L
CDQSB25-5T	8.5	40	M5 x 40L
-10T		45	x 45L

Material: Chromium molybdenum steel
Surface treatment: Nickel plated

Construction

Single acting, Spring return

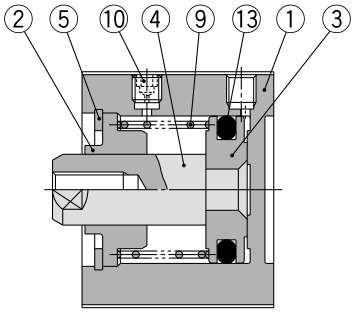

Single acting, Spring extend

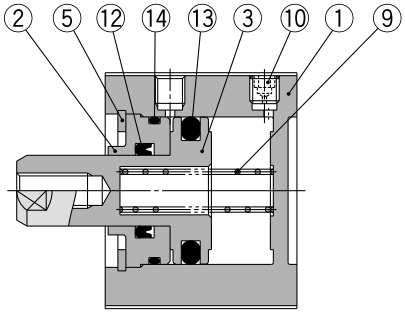

Single acting, Spring return/With auto switch (Built-in magnet)

ø12, 16

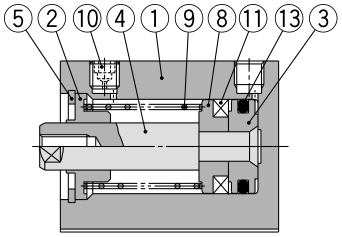

ø20, 25

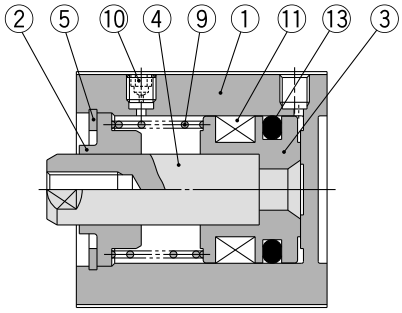

Single acting, Spring extend/With auto switch (Built-in magnet)

ø12, 16

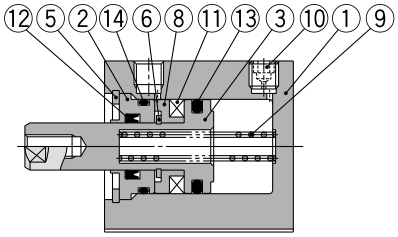

ø20, 25

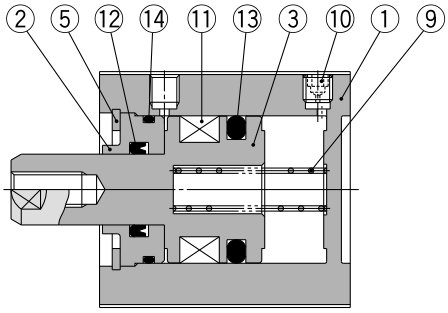

Component Parts

No.	Description	Material	Note
1	**Cylinder tube**	Aluminum alloy	Hard anodized
2	**Collar**	Aluminum alloy	Anodized
3	**Piston**	Aluminum alloy	Single acting, Spring return
		Stainless steel	Single acting, Spring extend
4	**Piston rod**	Stainless steel	
5	**Retaining ring**	Carbon tool steel	Phosphate coated
6	**Retaining ring**	Carbon tool steel	Nickel plated
7	**Rod end nut**	Carbon steel	Nickel plated
8	**Spacer for switch type**	Aluminum alloy	Chromated
9	**Return spring**	Piano wire	Zinc chromated
10	**Plug with fixed orifice**	Alloy steel	Nickel plated
11	**Magnet**	—	
12 *	**Rod seal**	NBR	
13 *	**Piston seal**	NBR	
14 *	**Tube gasket**	NBR	

Rod end male thread

Single acting, Spring return

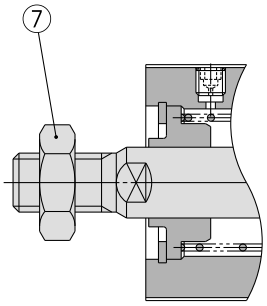

Single acting, Spring extend

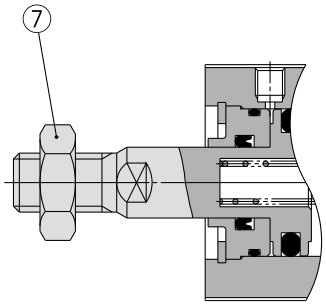

Replacement Parts/Seal Kit
Single acting, Spring return

Bore size (mm)	Kit no.	Contents
12	CQSB12-S-PS	Set of nos. above ⑬
16	CQSB16-S-PS	
20	CQSB20-S-PS	
25	CQSB25-S-PS	

∗ Seal kit includes ⑬. Order the seal kit, based on each bore size.
∗ Since the seal kit does not include a grease pack, order it separately.
Grease pack part no.: GR-S-010 (10 g)

Replacement Parts/Seal Kit
Single acting, Spring extend

Bore size (mm)	Kit no.	Contents
12	CQSB12-T-PS	Set of nos. above ⑫, ⑬, ⑭
16	CQSB16-T-PS	
20	CQSB20-T-PS	
25	CQSB25-T-PS	

∗ Seal kit includes ⑫, ⑬, ⑭. Order the seal kit, based on each bore size.
∗ Since the seal kit does not include a grease pack, order it separately.
Grease pack part no.: GR-S-010 (10 g)

Dimensions: ø12 to ø25/Single Acting, Spring Return

Basic style (Through-hole/Both ends tapped common): CQSB/CDQSB

ø12

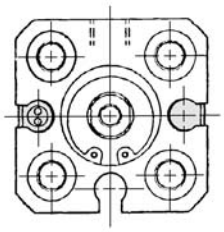

ø16

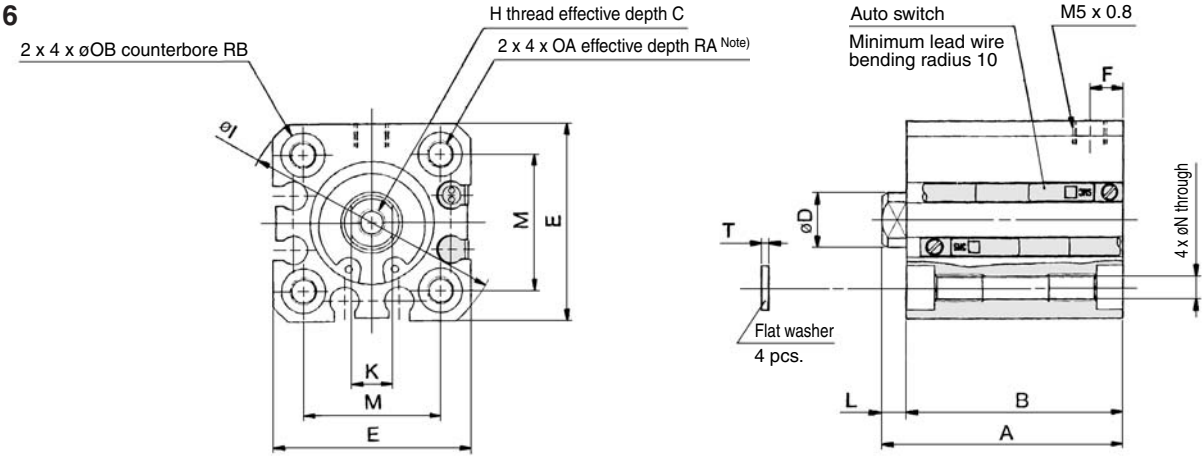

ø20, ø25

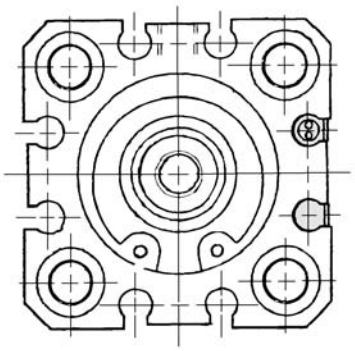

Rod end male thread

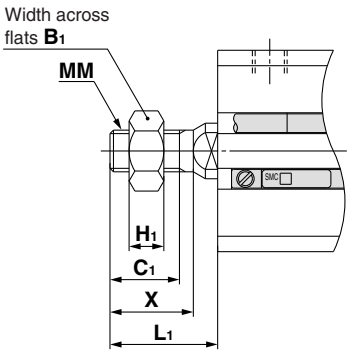

Rod End Male Thread

Bore size (mm)	B_1	C_1	H_1	L_1	MM	X
12	8	9	4	14	M5 x 0.8	10.5
16	10	10	5	15.5	M6 x 1.0	12
20	13	12	5	18.5	M8 x 1.25	14
25	17	15	6	22.5	M10 x 1.25	17.5

Basic Style

Bore size (mm)	Stroke range (mm)	Without auto switch A		Without auto switch B		With auto switch A		With auto switch B		C	D	E	F	H	I	K	L	M	N	OA	OB	RA	RB	T
		5ST	10ST	5ST	10ST	5ST	10ST	5ST	10ST															
12	5, 10	25.5	30.5	22	27	30.5	35.5	27	32	6	6	25	5	M3 x 0.5	32	5	3.5	15.5	3.5	M4 x 0.7	6.5	7	4	0.5
16		25.5	30.5	22	27	30.5	35.5	27	32	8	8	29	5	M4 x 0.7	38	6	3.5	20	3.5	M4 x 0.7	6.5	7	4	0.5
20		29	34	24.5	29.5	39	44	34.5	39.5	7	10	36	5.5	M5 x 0.8	47	8	4.5	25.5	5.4	M6 x 1.0	9	10	7	1
25		32.5	37.5	27.5	32.5	42.5	47.5	37.5	42.5	12	12	40	5.5	M6 x 1.0	52	10	5	28	5.4	M6 x 1.0	9	10	7	1

Note) For basic style ø12 and ø16 with 5 stroke, through-hole is threaded over the entire length.
For basic style ø20, ø25 with 5 and 10 stroke, through-hole is threaded over the entire length.
With auto switch (Built-in magnet)/ø20; 5 stroke.

∗ For details about the rod end nut and accessory brackets, refer to page 620.

Dimensions: ø12 to ø25/Single Acting, Spring Return

Foot style: CQSL/CDQSL

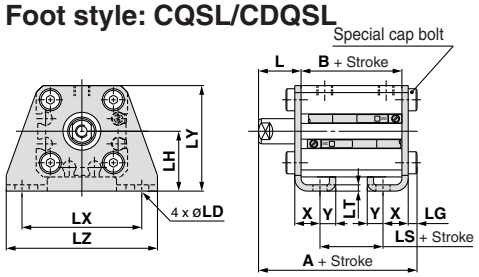

Rod end male thread

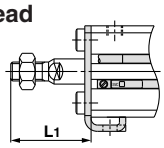

Foot Style

Bore size (mm)	Stroke range (mm)	Without auto switch			With auto switch			L	L1	LD	LG	LH	LT	LX	LY	LZ	X	Y
		A	B	LS	A	B	LS											
12	5, 10	35.3	17	5	40.3	22	10	13.5	24	4.5	2.8	17	2	34	29.5	44	8	4.5
16		35.3	17	5	40.3	22	10	13.5	25.5	4.5	2.8	19	2	38	33.5	48	8	5
20		41.2	19.5	7.5	51.2	29.5	17.5	14.5	28.5	6.6	4	24	3.2	48	42	62	9.2	5.8
25		44.7	22.5	7.5	54.7	32.5	17.5	15	32.5	6.6	4	26	3.2	52	46	66	10.7	5.8

Foot bracket material: Carbon steel
Surface treatment: Nickel plated

Rod side flange style: CQSF/CDQSF

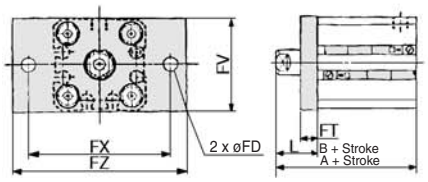

Rod end male thread

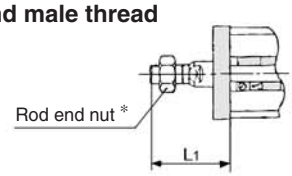

Rod Side Flange Style

Bore size (mm)	Stroke range (mm)	Without auto switch		With auto switch		FD	FT	FV	FX	FZ	L	L1
		A	B	A	B							
12	5, 10	30.5	17	35.5	22	4.5	5.5	25	45	55	13.5	24
16		30.5	17	35.5	22	4.5	5.5	30	45	55	13.5	25.5
20		34	19.5	44	29.5	6.6	8	39	48	60	14.5	28.5
25		37.5	22.5	47.5	32.5	6.6	8	42	52	64	15	32.5

Flange bracket material: Carbon steel
Surface treatment: Nickel plated

Head side flange style: CQSG/CDQSG

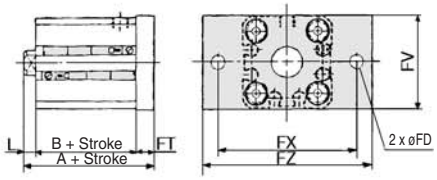

Rod end male thread

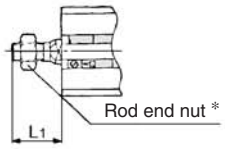

Head Side Flange Style

Bore size (mm)	Stroke range (mm)	Without auto switch		With auto switch		FD	FT	FV	FX	FZ	L	L1
		A	B	A	B							
12	5, 10	26	17	31	22	4.5	5.5	25	45	55	3.5	14
16		26	17	31	22	4.5	5.5	30	45	55	3.5	15.5
20		32	19.5	42	29.5	6.6	8	39	48	60	4.5	18.5
25		35.5	22.5	45.5	32.5	6.6	8	42	52	64	5	22.5

Flange bracket material: Carbon steel
Surface treatment: Nickel plated

Double clevis style: CQSD/CDQSD

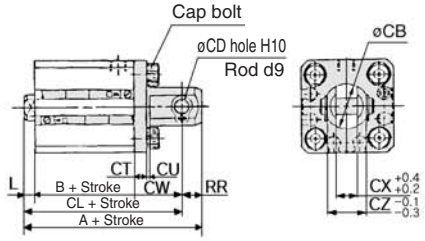

Rod end male thread

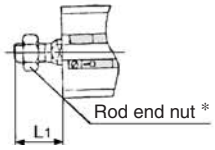

Double Clevis Style

Bore size (mm)	Stroke range (mm)	Without auto switch			With auto switch			CB	CD	CT	CU	CW	CX	CZ	L	L1	RR
		A	B	CL	A	B	CL										
12	5, 10	40.5	17	34.5	45.5	22	39.5	12	5	4	7	14	5	10	3.5	14	6
16		41.5	17	35.5	46.5	22	40.5	14	5	4	10	15	6.5	12	3.5	15.5	6
20		51	19.5	42	61	29.5	52	20	8	5	12	18	8	16	4.5	18.5	9
25		57.5	22.5	47.5	67.5	32.5	57.5	24	10	5	14	20	10	20	5	22.5	10

Double clevis bracket material: Carbon steel
Surface treatment: Nickel plated

∗ For details about the rod end nut and accessory brackets, refer to page 620.

Dimensions: ø12 to ø25/Single Acting, Spring Extend

Basic style (Through-hole/Both ends tapped common): CQSB/CDQSB

ø12

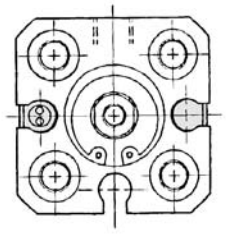

ø16

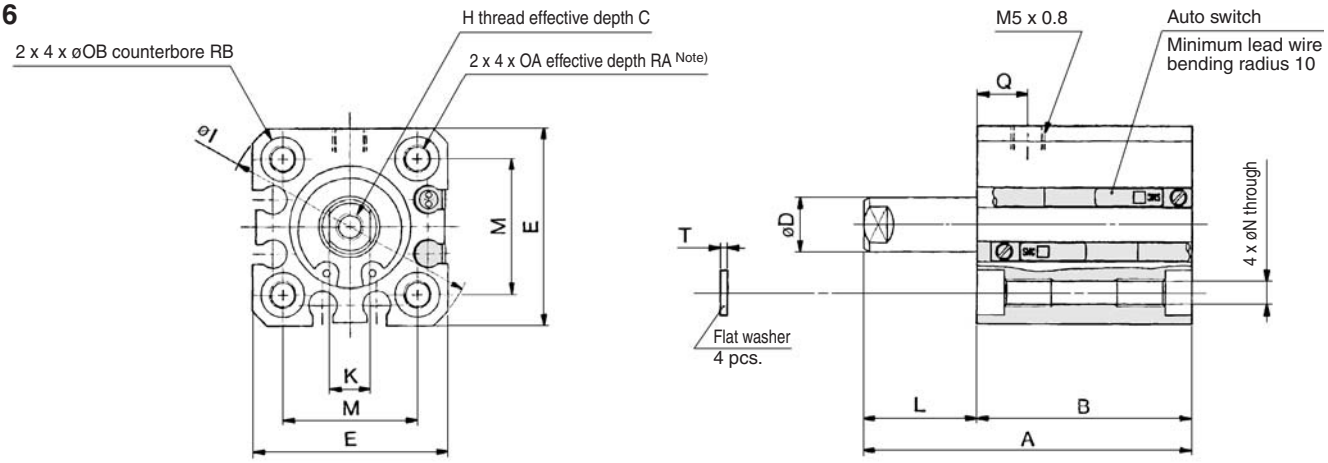

ø20, ø25

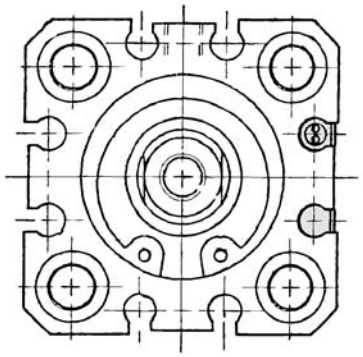

Rod end male thread

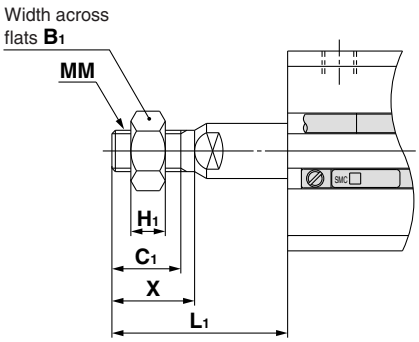

Rod End Male Thread

Bore size (mm)	B_1	C_1	H_1	L_1		MM	X
				5ST	10ST		
12	8	9	4	19	24	M5 x 0.8	10.5
16	10	10	5	20.5	25.5	M6 x 1.0	12
20	13	12	5	23.5	28.5	M8 x 1.25	14
25	17	15	6	27.5	32.5	M10 x 1.25	17.5

Basic Style

Bore size (mm)	Stroke range (mm)	Without auto switch				With auto switch				C	D	E	H	I	K	L		M	N	OA	OB	Q	RA	RB	T
		A		B		A		B																	
		5ST	10ST	5ST	10ST	5ST	10ST	5ST	10ST							5ST	10ST								
12	5, 10	30.5	40.5	22	27	35.5	45.5	27	32	6	6	25	M3 x 0.5	32	5	8.5	13.5	15.5	3.5	M4 x 0.7	6.5	7.5	7	4	0.5
16		30.5	40.5	22	27	35.5	45.5	27	32	8	8	29	M4 x 0.7	38	6	8.5	13.5	20	3.5	M4 x 0.7	6.5	7.5	7	4	0.5
20		34	44	24.5	29.5	44	54	34.5	39.5	7	10	36	M5 x 0.8	47	8	9.5	14.5	25.5	5.4	M6 x 1.0	9	9	10	7	1
25		37.5	47.5	27.5	32.5	47.5	57.5	37.5	42.5	12	12	40	M6 x 1.0	52	10	10	15	28	5.4	M6 x 1.0	9	11	10	7	1

Note) For basic style ø12 and ø16 with 5 stroke, through-hole is threaded over the entire length.
For basic style ø20, ø25 with 5 and 10 stroke, through-hole is threaded over the entire length.
With auto switch (Built-in magnet)/ø20; 5 stroke.

∗ For details about the rod end nut and accessory brackets, refer to page 620.

Dimensions: ø12 to ø25/Single Acting, Spring Extend

Foot style: CQSL/CDQSL

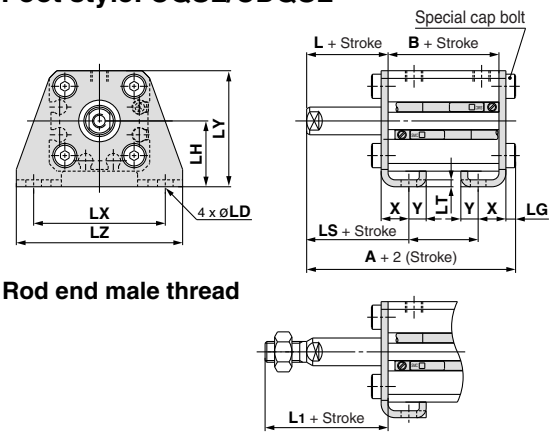

Rod end male thread

Foot Style

Bore size (mm)	Stroke range (mm)	Without auto switch			With auto switch		
		A	B	LS	A	B	LS
12	5, 10	35.3	17	5	40.3	22	10
16		35.3	17	5	40.3	22	10
20		41.2	19.5	7.5	51.2	29.5	17.5
25		44.7	22.5	7.5	54.7	32.5	17.5

Bore size (mm)	L	L1	LD	LG	LH	LT	LX	LY	LZ	X	Y
12	13.5	24	4.5	2.8	17	2	34	29.5	44	8	4.5
16	13.5	25.5	4.5	2.8	19	2	38	33.5	48	8	5
20	14.5	28.5	6.6	4	24	3.2	48	42	62	9.2	5.8
25	15	32.5	6.6	4	26	3.2	52	46	66	10.7	5.8

Foot bracket material: Carbon steel
Surface treatment: Nickel plated

Rod side flange style: CQSF/CDQSF

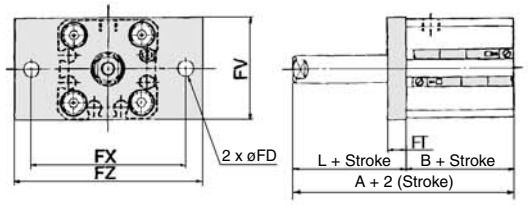

Rod end male thread

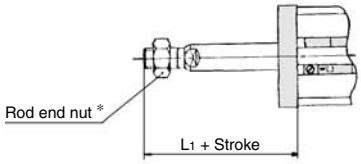

Rod Side Flange Style

Bore size (mm)	Stroke range (mm)	Without auto switch		With auto switch		FD	FT	FV	FX	FZ	L	L1
		A	B	A	B							
12	5, 10	30.5	17	35.5	22	4.5	5.5	25	45	55	13.5	24
16		30.5	17	35.5	22	4.5	5.5	30	45	55	13.5	25.5
20		34	19.5	44	29.5	6.6	8	39	48	60	14.5	28.5
25		37.5	22.5	47.5	32.5	6.6	8	42	52	64	15	32.5

Flange bracket material: Carbon steel
Surface treatment: Nickel plated

Head side flange style: CQSG/CDQSG

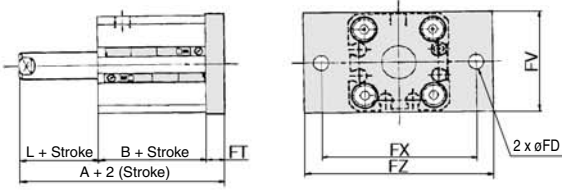

Rod end male thread

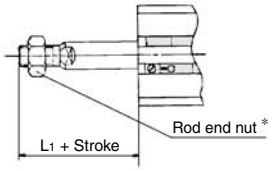

Head Side Flange Style

Bore size (mm)	Stroke range (mm)	Without auto switch		With auto switch		FD	FT	FV	FX	FZ	L	L1
		A	B	A	B							
12	5, 10	26	17	31	22	4.5	5.5	25	45	55	3.5	14
16		26	17	31	22	4.5	5.5	30	45	55	3.5	15.5
20		32	19.5	42	29.5	6.6	8	39	48	60	4.5	18.5
25		35.5	22.5	45.5	32.5	6.6	8	42	52	64	5	22.5

Flange bracket material: Carbon steel
Surface treatment: Nickel plated

Double clevis style: CQSD/CDQSD

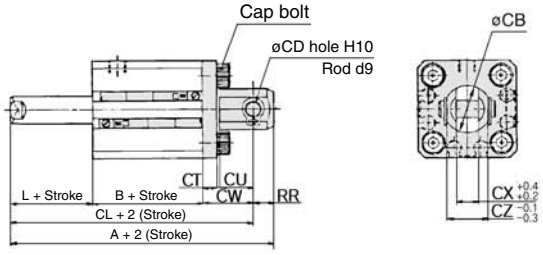

Rod end male thread

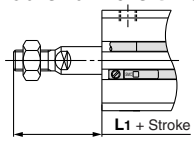

Double Clevis Style

Bore size (mm)	Stroke range (mm)	Without auto switch			With auto switch		
		A	B	CL	A	B	CL
12	5, 10	40.5	17	34.5	45.5	22	39.5
16		41.5	17	35.5	46.5	22	40.5
20		51	19.5	42	61	29.5	52
25		57.5	22.5	47.5	67.5	32.5	57.5

Bore size (mm)	CB	CD	CT	CU	CW	CX	CZ	L	L1	RR
12	12	5	4	7	14	5	10	3.5	14	6
16	14	5	4	10	15	6.5	12	3.5	15.5	6
20	20	8	5	12	18	8	16	4.5	18.5	9
25	24	10	5	14	20	10	20	5	22.5	10

Double clevis bracket material: Carbon steel
Surface treatment: Nickel plated

∗ For details about the rod end nut and accessory brackets, refer to page 620.

Compact Cylinder: Non-rotating Rod Type
Double Acting, Single Rod
Series CQSK
ø12, ø16, ø20, ø25

How to Order

CQSK **B** **20** – **30** **D** □ – □

With auto switch **CDQSK** **B** **20** – **30** **D** □ – **M9BW** □ – □

With auto switch
(Built-in magnet)

Mounting style

B	Through-hole/Both ends tapped common (Standard)
L	Foot style
F	Rod side flange style
G	Head side flange style
D	Double clevis style

∗ Mounting brackets are shipped together, (but not assembled).
∗ Cylinder mounting bolts are not included. Order them separately referring to "Mounting Bolt for CQSK" on page 579.

Bore size

12	12 mm
16	16 mm
20	20 mm
25	25 mm

Number of auto switches

Nil	2 pcs.
S	1 pc.
n	"n" pcs.

Auto switch

Nil	Without auto switch

∗ Refer to the table below for the applicable auto switch model.

Made to Order
Refer to page 576 for details.

Cylinder stroke (mm)

Standard Stroke

Bore size (mm)	Standard stroke (mm)
12, 16	5, 10, 15, 20, 25, 30
20, 25	5, 10, 15, 20, 25, 30, 35, 40, 45, 50

For "Manufacture of Intermediate Strokes", refer to page 576.

Body option

Nil	Standard (Rod end female thread)
M	Rod end male thread
F	Boss on head side

Action

D	Double acting

Built-in Magnet Cylinder Model

If a built-in magnet cylinder without an auto switch is required, there is no need to enter the symbol for the auto switch.
(Example) CDQSKL25-30D

Applicable Auto Switch/Refer to pages 1263 to 1371 for further information on auto switches.

Type	Special function	Electrical entry	Indicator light	Wiring (Output)	Load voltage DC		Load voltage AC	Auto switch model: Perpendicular	Auto switch model: In-line	Lead wire length (m): 0.5 (Nil)	1 (M)	3 (L)	5 (Z)	Pre-wired connector	Applicable load	
Solid state switch	—	Grommet	Yes	3-wire (NPN)	24 V	5 V, 12 V	—	**M9NV**	**M9N**	●	●	●	○	○	IC circuit	Relay, PLC
				3-wire (PNP)				**M9PV**	**M9P**	●	●	●	○	○		
				2-wire		12 V		**M9BV**	**M9B**	●	●	●	○	○	—	
	Diagnostic indication (2-color indication)			3-wire (NPN)		5 V, 12 V		**M9NWV**	**M9NW**	●	●	●	○	○	IC circuit	
				3-wire (PNP)				**M9PWV**	**M9PW**	●	●	●	○	○		
				2-wire		12 V		**M9BWV**	**M9BW**	●	●	●	○	○	—	
	Water resistant (2-color indication)			3-wire (NPN)		5 V, 12 V		**M9NAV**	**M9NA**	○	○	●	○	○	IC circuit	
				3-wire (PNP)				**M9PAV**	**M9PA**	○	○	●	○	○		
				2-wire		12 V		**M9BAV**	**M9BA**	○	○	●	○	○	—	
Reed switch	—	Grommet	Yes	3-wire (NPN equivalent)	—	5 V	—	**A96V**	**A96**	●	—	●	—	—	IC circuit	—
			No	2-wire	24 V	12 V	100 V	**A93V**	**A93**	●	—	●	—	—	—	Relay, PLC
							100 V or less	**A90V**	**A90**	●	—	●	—	—	IC circuit	

∗ Lead wire length symbols: 0.5 m····· Nil (Example) M9NW
1 m····· M (Example) M9NWM
3 m····· L (Example) M9NWL
5 m····· Z (Example) M9NWZ

∗ Solid state auto switches marked with "○" are produced upon receipt of order.

∗ Since there are other applicable auto switches than listed, refer to page 597 for details.
∗ For details about auto switches with pre-wired connector, refer to pages 1328 and 1329.
∗ Auto switches are shipped together (not assembled).
Note) There is the case A9□V/M9□V/M9□WV/M9□AVL type auto switches cannot be mounted on the port surface, depending on the cylinder's stroke and the fitting size for piping. Consult with SMC for details.



JIS Symbol

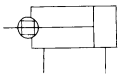

Made to Order Specifications

(For details, refer to pages 1426 and 1430 to 1446.)

Symbol	Specifications
–XC6	Piston rod and rod end nut made of stainless steel
–XC8	Adjustable stroke cylinder/Adjustable extension type
–XC9	Adjustable stroke cylinder/Adjustable retraction type
–XC10	Dual stroke cylinder/Double rod type
–XC11	Dual stroke cylinder/Single rod type
–X1876	With concave shape end boss on the cylinder tube head side

Body Option

Description	Application
Rod end male thread	Available for all non-rotating rod type.

Mounting Bracket Part No.

Bore size (mm)	Foot (1)	Flange	Double clevis
12	CQSK-L012	CQSK-F012	CQSK-D012
16	CQSK-L016	CQSK-F016	CQSK-D016
20	CQSK-L020	CQSK-F020	CQSK-D020
25	CQSK-L025	CQSK-F025	CQSK-D025

Note 1) When ordering foot bracket, order 2 pieces per cylinder.
Note 2) Parts belonging to each bracket are as follows.
Foot or Flange style: Body mounting bolt
Double clevis style: Clevis pin, Type C retaining ring for axis, Body mounting bolt.

Standard Specifications

Bore size (mm)	12	16	20	25
Action	Double acting, Single rod			
Fluid	Air			
Lubrication	Not required (Non-lube)			
Proof pressure	1.5 MPa			
Maximum operating pressure	1.0 MPa			
Minimum operating pressure	0.07 MPa		0.05 MPa	
Ambient and fluid temperature	Without auto switch: –10 to 70°C (No freezing)			
	With auto switch: –10 to 60°C (No freezing)			
Cushion	None			
Rod end thread	Female thread			
Stroke length tolerance	$^{+1.0\ mm}_{0}$			
Mounting	Through-hole/Both ends tapped common			
Piston speed	50 to 500 mm/s			
Allowable kinetic energy (J)	0.022	0.038	0.055	0.09
Rod non-rotating accuracy	±1°		±0.7°	

Theoretical Output

OUT IN (N)

Bore size (mm)	Rod width across flats (mm)	Action	Piston area (mm^2)	Operating pressure (MPa)		
				0.3	0.5	0.7
12	5.2	IN	90	27	45	63
		OUT	113	34	57	79
16	6.2	IN	168	50	84	117
		OUT	201	60	101	141
20	8.2	IN	256	77	128	179
		OUT	314	94	157	220
25	10.2	IN	401	120	200	281
		OUT	491	147	245	344

Manufacture of Intermediate Stroke

Description		Spacer is installed in the standard stroke body.	
Part no.		Refer to "How to Order" for the standard model no. (page 575).	
Standard stroke	Description	Intermediate strokes by the 1 mm interval are available by using spacers with standard stroke cylinders.	
	Stroke range	Bore size	Stroke range
		12, 16	1 to 29
		20, 25	1 to 49
Example		Part no.: CQSKB25–47D CQSKB25-50D with 3 mm width spacer inside. B dimension is 77.5 mm.	

Refer to pages 595 to 597 for cylinders with auto switches.

- Minimum auto switch mounting stroke
- Proper auto switch mounting position (detection at stroke end) and mounting height
- Operating range
- Switch mounting bracket: Part no.

Mass/Without Auto Switch

(g)

Bore size (mm)	Cylinder stroke (mm)									
	5	10	15	20	25	30	35	40	45	50
12	39	46	53	60	67	74	–	–	–	–
16	52	61	69	78	86	95	–	–	–	–
20	89	102	116	129	143	156	170	183	197	211
25	124	141	157	174	190	207	224	240	257	273

Mass/With Auto Switch (Built-in magnet)

(g)

Bore size (mm)	Cylinder stroke (mm)									
	5	10	15	20	25	30	35	40	45	50
12	47	54	62	69	76	83	–	–	–	–
16	63	71	80	88	97	106	–	–	–	–
20	122	136	149	163	176	190	203	217	230	244
25	168	185	201	218	235	251	268	284	301	317

Additional Mass

(g)

Bore size (mm)		**12**	**16**	**20**	**25**
Rod end male thread	Male thread	1.5	3	6	12
	Nut	1	2	4	8
Foot style (Including mounting bolt)		55	64	158	179
Rod side flange style (Including mounting bolt)		58	69	142	178
Head side flange style (Including mounting bolt)		56	66	137	171
Double clevis style (Including pin, retaining ring, bolt)		34	40	92	127

Calculation: (Example) **CQSKF20-5DM**

- Cylinder mass: CQSKB20-5D····· 89 g
- Option mass: Rod end male thread····· 10 g

: Rod side flange style····· 142 g

241 g

Construction

Basic style

ø12

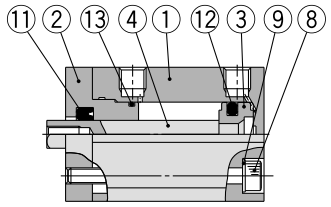

ø16, ø20, ø25

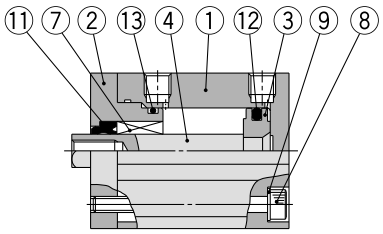

Rod end male thread

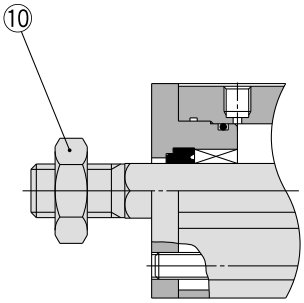

With auto switch (Built-in magnet)

ø12

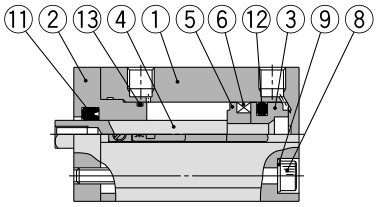

ø16

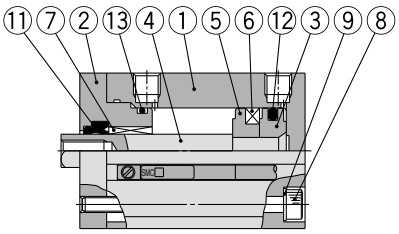

ø20, ø25

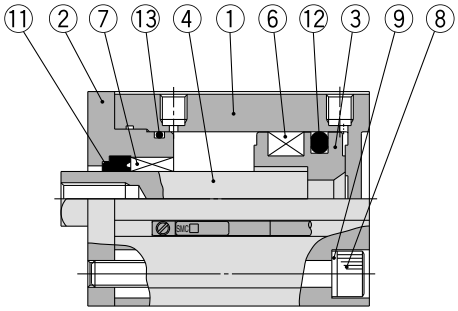

Component Parts

No.	Description	Material	Note
1	**Cylinder tube**	Aluminum alloy	Hard anodized
2	**Rod cover**	Aluminum alloy	Anodized
3	**Piston**	Aluminum alloy	Chromated
4	**Piston rod**	Stainless steel	
5	**Spacer for switch type**	Aluminum alloy	Chromated
6	**Magnet**	—	
7	**Non-rotating guide**	Oil impregnated sintered alloy	ø16, ø20 and ø25
8	**Hexagon socket head cap screw**	Alloy steel	Nickel plated
9	**Plain washer**	Rolled steel	Nickel plated
10	**Rod end nut**	Carbon steel	Nickel plated
11*	**Rod seal**	NBR	
12*	**Piston seal**	NBR	
13*	**Tube gasket**	NBR	

Replacement Parts/Seal Kit

Bore size (mm)	Kit no.	Contents
12	CQSKB12-PS	Set of nos. above ⑪, ⑫, ⑬.
16	CQSKB16-PS	
20	CQSKB20-PS	
25	CQSKB25-PS	

* Seal kit includes ⑪, ⑫, ⑬. Order the seal kit, based on each bore size.
* Since the seal kit does not include a grease pack, order it separately.
Grease pack part no.: GR-S-010 (10 g)

⚠Precautions

Operating Precautions

⚠Caution

1. Any kind of operation producing rotational torque to piston rod must be considered. The non-rotating guide would be deformed and the accuracy would be compromised.
Refer to the table below for rotation torque allowance.

Allowable rotational torque (N·m) or less	ø12	ø16	ø20	ø25
	0.04	0.04	0.2	0.25

2. Load to piston rod must always be in an axial direction.

3. When a workpiece is secured to the end of the piston rod, ensure that the piston rod is retracted entirely, and place a wrench on the portion of the rod that protrudes beyond the section. Also, tighten by giving consideration to prevent the tightening torque from being applied to the non-rotating guide.

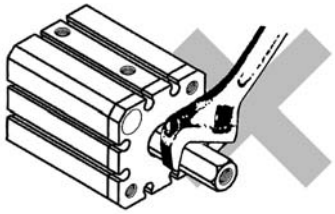

Mounting Bolt for CQSK

Mounting method: Mounting bolt for through-hole mounting style of CQSK is available as an option.
Ordering: Add the word "Bolt" in front of the bolts to be used.

Example) Bolt M3 x 30L 2 pcs.

Head side mounting style

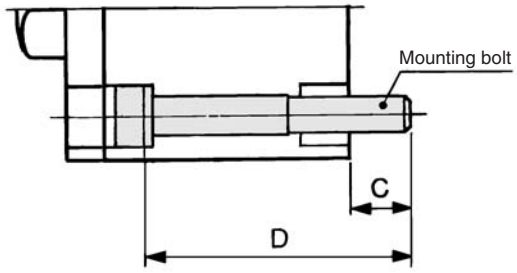

Rod side mounting style

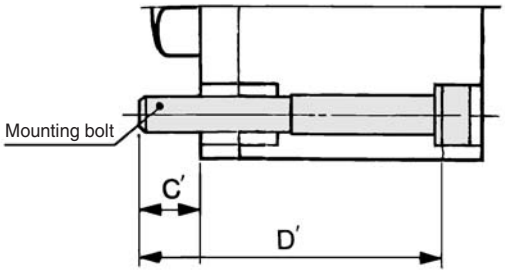

Note) When mounting a cylinder with through-hole, be sure to use the attached plain washer.

Cylinder model	C	D	Mounting bolt size	C'	D'	Mounting bolt size
CQSKB12-5D	6.5	25	M3 x 25L	6.5	30	M3 x 30L
-10D		30	x 30L		35	x 35L
-15D		35	x 35L		40	x 40L
-20D		40	x 40L		45	x 45L
-25D		45	x 45L		50	x 50L
-30D		50	x 50L		55	x 55L
CQSKB16-5D	6.5	25	M3 x 25L	6.5	30	M3 x 30L
-10D		30	x 30L		35	x 35L
-15D		35	x 35L		40	x 40L
-20D		40	x 40L		45	x 45L
-25D		45	x 45L		50	x 50L
-30D		50	x 50L		55	x 55L
CQSKB20-5D	6.5	25	M5 x 25L	6.5	30	M5 x 30L
-10D		30	x 30L		35	x 35L
-15D		35	x 35L		40	x 40L
-20D		40	x 40L		45	x 45L
-25D		45	x 45L		50	x 50L
-30D		50	x 50L		55	x 55L
-35D		55	x 55L		60	x 60L
-40D		60	x 60L		65	x 65L
-45D		65	x 65L		70	x 70L
-50D		70	x 70L		75	x 75L
CQSKB25-5D	8.5	30	M5 x 30L	8.5	35	M5 x 35L
-10D		35	x 35L		40	x 40L
-15D		40	x 40L		45	x 45L
-20D		45	x 45L		50	x 50L
-25D		50	x 50L		55	x 55L
-30D		55	x 55L		60	x 60L
-35D		60	x 60L		65	x 65L
-40D		65	x 65L		70	x 70L
-45D		70	x 70L		75	x 75L
-50D		75	x 75L		80	x 80L

Material: Chromium molybdenum steel
Surface treatment: Nickel plated

Mounting Bolt for CDQSK

Mounting method: Mounting bolt for through-hole mounting style of CDQSK is available as an option.
Ordering: Add the word "Bolt" in front of the bolts to be used.

Example) Bolt M3 x 35L 2 pcs.

Head side mounting style

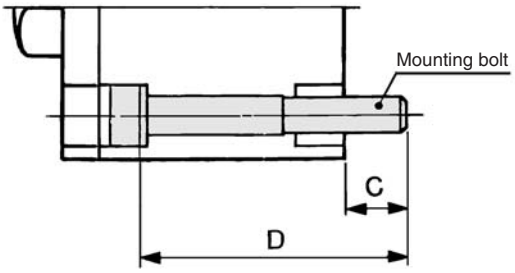

Rod side mounting style

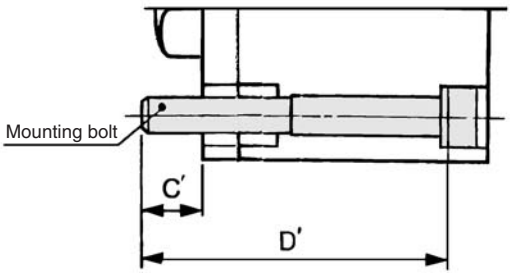

Note) When mounting a cylinder with through-hole, be sure to use the attached plain washer.

Cylinder model	C	D	Mounting bolt size	C'	D'	Mounting bolt size
CDQSKB12-5D	6.5	30	M3 x 30L	6.5	35	M3 x 35L
-10D		35	x 35L		40	x 40L
-15D		40	x 40L		45	x 45L
-20D		45	x 45L		50	x 50L
-25D		50	x 50L		55	x 55L
-30D		55	x 55L		60	x 60L
CDQSKB16-5D	6.5	30	M3 x 30L	6.5	35	M3 x 35L
-10D		35	x 35L		40	x 40L
-15D		40	x 40L		45	x 45L
-20D		45	x 45L		50	x 50L
-25D		50	x 50L		55	x 55L
-30D		55	x 55L		60	x 60L
CDQSKB20-5D	6.5	35	M5 x 35L	6.5	40	M5 x 40L
-10D		40	x 40L		45	x 45L
-15D		45	x 45L		50	x 50L
-20D		50	x 50L		55	x 55L
-25D		55	x 55L		60	x 60L
-30D		60	x 60L		65	x 65L
-35D		65	x 65L		70	x 70L
-40D		70	x 70L		75	x 75L
-45D		75	x 75L		80	x 80L
-50D		80	x 80L		85	x 85L
CDQSKB25-5D	8.5	40	M5 x 40L	8.5	45	M5 x 45L
-10D		45	x 45L		50	x 50L
-15D		50	x 50L		55	x 55L
-20D		55	x 55L		60	x 60L
-25D		60	x 60L		65	x 65L
-30D		65	x 65L		70	x 70L
-35D		70	x 70L		75	x 75L
-40D		75	x 75L		80	x 80L
-45D		80	x 80L		85	x 85L
-50D		85	x 85L		90	x 90L

Material: Chromium molybdenum steel
Surface treatment: Nickel plated

Dimensions: ø12 to ø25

Basic style (Through-hole/Both ends tapped common): CQSK/CDQSK

∗ For the auto switch mounting position and its mounting height, refer to page 596.

ø12

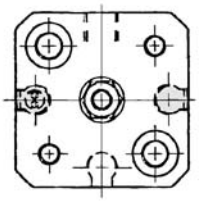

ø16

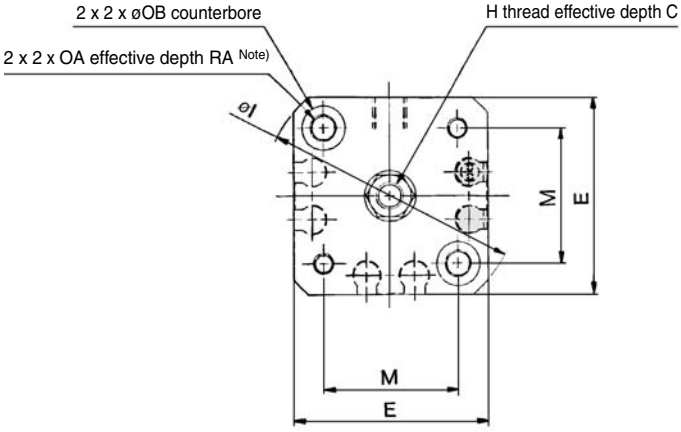

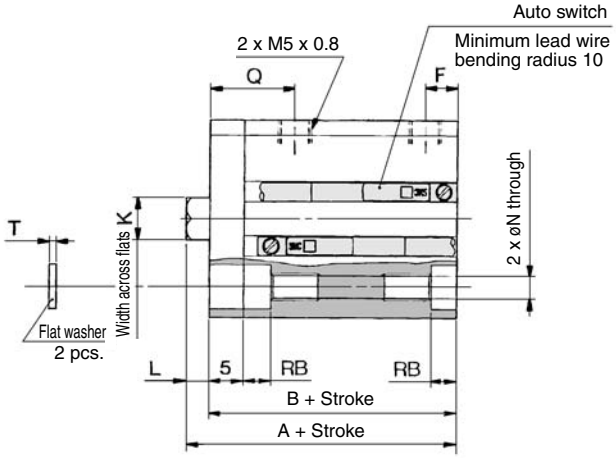

ø20, ø25

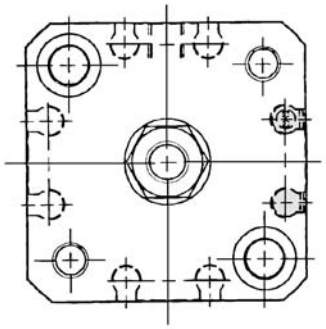

Rod end male thread

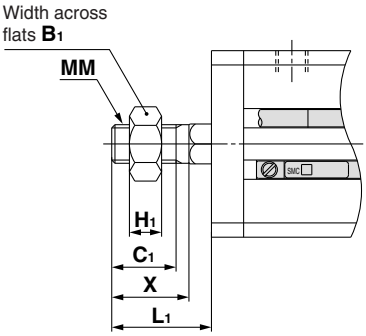

Rod End Male Thread

Bore size (mm)	B_1	C_1	H_1	L_1	MM	X
12	8	9	4	14	M5 x 0.8	10.5
16	10	10	5	15.5	M6 x 1.0	12
20	13	12	5	18.5	M8 x 1.25	14
25	17	15	6	22.5	M10 x 1.25	17.5

Basic Style

Bore size (mm)	Stroke range (mm)	Without auto switch		With auto switch		C	E	F	H	I	K	L	M	N	OA	OB	Q	RA	RB	T
		A	B	A	B															
12	5 to 30	25.5	22	30.5	27	6	25	5	M3 x 0.5	32	5.2	3.5	15.5	3.5	M4 x 0.7	6.5	12.5	7	4	0.5
16	5 to 30	25.5	22	30.5	27	8	29	5	M4 x 0.7	38	6.2	3.5	20	3.5	M4 x 0.7	6.5	12.5	7	4	0.5
20	5 to 50	29	24.5	39	34.5	7	36	5.5	M5 x 0.8	47	8.2	4.5	25.5	5.4	M6 x 1.0	9	14	10	7	1
25	5 to 50	32.5	27.5	42.5	37.5	12	40	5.5	M6 x 1.0	52	10.2	5	28	5.4	M6 x 1.0	9	16	10	7	1

Note) For basic style ø12 and ø16 with 5 stroke, through-hole is threaded over the entire length.
For basic style ø20 with 5 to 15 stroke, through-hole is threaded over the entire length.
For basic style ø25 with 5 and 10 stroke, through-hole is threaded over the entire length.

Note) With auto switch (Built-in magnet): ø20; 5 stroke

∗ For details about the rod end nut and accessory brackets, refer to page 620.

Foot style: CQSKL/CDQSKL

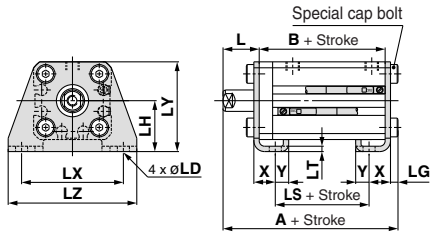

Rod end male thread

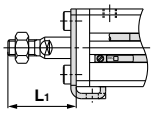

Foot Style

Bore size (mm)	Stroke range (mm)	Without auto switch			With auto switch			L	L1	LD	LG	LH	LT	LX	LY	LZ	X	Y
		A	B	LS	A	B	LS											
12	5 to 30	40.3	22	10	45.3	27	15	13.5	24	4.5	2.8	17	2	34	29.5	44	8	4.5
16	5 to 30	40.3	22	10	45.3	27	15	13.5	25.5	4.5	2.8	19	2	38	33.5	48	8	5
20	5 to 50	46.2	24.5	12.5	56.2	34.5	22.5	14.5	28.5	6.6	4	24	3.2	48	42	62	9.2	5.8
25	5 to 50	49.7	27.5	12.5	59.7	37.5	22.5	15	32.5	6.6	4	26	3.2	52	46	66	10.7	5.8

Foot bracket material: Carbon steel
Surface treatment: Nickel plated

Rod side flange style: CQSKF/CDQSKF

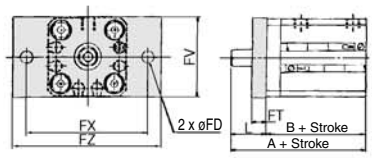

Rod end male thread

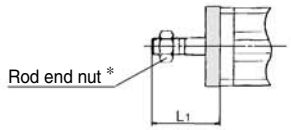

Rod Side Flange Style

Bore size (mm)	Stroke range (mm)	Without auto switch		With auto switch		FD	FT	FV	FX	FZ	L	L1
		A	B	A	B							
12	5 to 30	35.5	22	40.5	27	4.5	5.5	25	45	55	13.5	24
16	5 to 30	35.5	22	40.5	27	4.5	5.5	30	45	55	13.5	25.5
20	5 to 50	39	24.5	49	34.5	6.6	8	39	48	60	14.5	28.5
25	5 to 50	42.5	27.5	52.5	37.5	6.6	8	42	52	64	15	32.5

Flange bracket material: Carbon steel
Surface treatment: Nickel plated

Head side flange style: CQSKG/CDQSKG

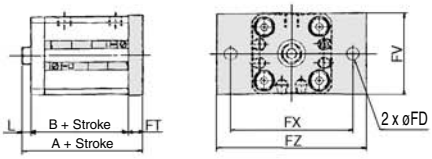

Rod end male thread

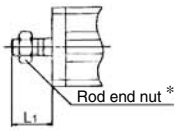

Head Side Flange Style

Bore size (mm)	Stroke range (mm)	Without auto switch		With auto switch		FD	FT	FV	FX	FZ	L	L1
		A	B	A	B							
12	5 to 30	31	22	36	27	4.5	5.5	25	45	55	3.5	14
16	5 to 30	31	22	36	27	4.5	5.5	30	45	55	3.5	15.5
20	5 to 50	37	24.5	47	34.5	6.6	8	39	48	60	4.5	18.5
25	5 to 50	40.5	27.5	50.5	37.5	6.6	8	42	52	64	5	22.5

Flange bracket material: Carbon steel
Surface treatment: Nickel plated

Double clevis style: CQSKD/CDQSKD

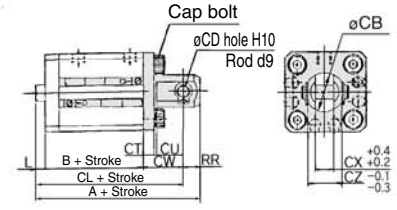

Rod end male thread

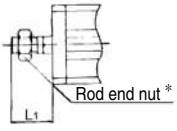

Double Clevis Style

Bore size (mm)	Stroke range (mm)	Without auto switch			With auto switch			CB	CD	CT	CU	CW	CX	CZ	L	L1	RR
		A	B	CL	A	B	CL										
12	5 to 30	45.5	22	39.5	50.5	27	44.5	12	5	4	7	14	5	10	3.5	14	6
16	5 to 30	46.5	22	40.5	51.5	27	45.5	14	5	4	10	15	6.5	12	3.5	15.5	6
20	5 to 50	56	24.5	47	66	34.5	57	20	8	5	12	18	8	16	4.5	18.5	9
25	5 to 50	62.5	27.5	52.5	72.5	37.5	62.5	24	10	5	14	20	10	20	5	22.5	10

Double clevis bracket material: Carbon steel
Surface treatment: Nickel plated

∗ For details about the rod end nut and accessory brackets, refer to page 620.

Compact Cylinder: Non-rotating Rod Type
Double Acting, Double Rod
Series CQSKW
ø12, ø16, ø20, ø25

How to Order

CQSKW B 20 – 30 D □ – □

With auto switch CDQSKW B 20 – 30 D □ – M9BW □ – □

With auto switch
(Built-in magnet)

Made to Order
Refer to page 583 for details.

Mounting style

B	Through-hole/Both ends tapped common (Standard)
L	Foot style
F	Flange style

* Mounting brackets are shipped together, (but not assembled).
* Cylinder mounting bolts are not included. Order them separately referring to "Mounting Bolt for CQSKW" on page 586.

Number of auto switches

Nil	2 pcs.
S	1 pc.
n	"n" pcs.

Auto switch

Nil	Without auto switch

* Refer to the table below for the applicable auto switch model.

Bore size

12	12 mm
16	16 mm
20	20 mm
25	25 mm

Body option

Nil	Standard (Rod end female thread)
M	Rod end male thread

Cylinder stroke (mm)

Action

D	Double acting

Standard Stroke

Bore size (mm)	Standard stroke (mm)
12, 16	5, 10, 15, 20, 25, 30
20, 25	5, 10, 15, 20, 25, 30, 35, 40, 45, 50

Built-in Magnet Cylinder Model

If a built-in magnet cylinder without an auto switch is required, there is no need to enter the symbol for the auto switch.
(Example) CDQSKWL25-30D

Applicable Auto Switch/Refer to pages 1263 to 1371 for further information on auto switches.

Type	Special function	Electrical entry	Indicator light	Wiring (Output)	Load voltage DC		Load voltage AC	Auto switch model: Perpendicular	Auto switch model: In-line	Lead wire length (m): 0.5 (Nil)	1 (M)	3 (L)	5 (Z)	Pre-wired connector	Applicable load	
Solid state switch	—	Grommet	Yes	3-wire (NPN)	24 V	5 V, 12 V	—	**M9NV**	**M9N**	●	●	●	○	○	IC circuit	Relay, PLC
				3-wire (PNP)				**M9PV**	**M9P**	●	●	●	○	○		
				2-wire		12 V		**M9BV**	**M9B**	●	●	●	○	○	—	
	Diagnostic indication (2-color indication)			3-wire (NPN)		5 V, 12 V		**M9NWV**	**M9NW**	●	●	●	○	○	IC circuit	
				3-wire (PNP)				**M9PWV**	**M9PW**	●	●	●	○	○		
				2-wire		12 V		**M9BWV**	**M9BW**	●	●	●	○	○	—	
	Water resistant (2-color indication)			3-wire (NPN)		5 V, 12 V		**M9NAV**	**M9NA**	○	○	●	○	○	IC circuit	
				3-wire (PNP)				**M9PAV**	**M9PA**	○	○	●	○	○		
				2-wire		12 V		**M9BAV**	**M9BA**	○	○	●	○	○	—	
Reed switch	—	Grommet	Yes	3-wire (NPN equivalent)	—	5 V	—	**A96V**	**A96**	●	—	●	—	—	IC circuit	—
			No	2-wire	24 V	12 V	100 V	**A93V**	**A93**	●	—	●	—	—	—	Relay, PLC
							100 V or less	**A90V**	**A90**	●	—	●	—	—	IC circuit	

* Lead wire length symbols: 0.5 m····· Nil (Example) M9NW
1 m····· M (Example) M9NWM
3 m····· L (Example) M9NWL
5 m····· Z (Example) M9NWZ

* Solid state auto switches marked with "○" are produced upon receipt of order.

* Since there are other applicable auto switches than listed, refer to page 597 for details.
* For details about auto switches with pre-wired connector, refer to pages 1328 and 1329.
* Auto switches are shipped together (not assembled).

Note) There is the case A9□V/M9□V/M9□WV/M9□AVL type auto switches cannot be mounted on the port surface, depending on the cylinder's stroke and the fitting size for piping. Consult with SMC for details.



JIS Symbol

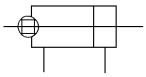

Specifications

Bore size (mm)	12	16	20	25
Action	Double acting, Single rod			
Fluid	Air			
Lubrication	Not required (Non-lube)			
Proof pressure	1.5 MPa			
Maximum operating pressure	1.0 MPa			
Minimum operating pressure	0.07 MPa		0.05 MPa	
Ambient and fluid temperature	Without auto switch: –10 to 70°C (No freezing)			
	With auto switch: –10 to 60°C (No freezing)			
Cushion	None			
Rod end thread	Female thread			
Stroke length tolerance	$^{+1.0}_{0}$ mm			
Mounting	Through-hole/Both ends tapped common			
Piston speed	50 to 500 mm/s			
Allowable kinetic energy (J)	0.022	0.038	0.055	0.09
Rod non-rotating accuracy	±1°		±0.7°	

Made to Order Specifications

(For details, refer to pages 1426 to 1511.)

Symbol	Specifications
–XC6	Piston rod, retaining ring, rod end nut made of stainless steel
–X633	Intermediate stroke of double rod cylinder

Body Option

Description	Application
Rod end male thread	Available for all non-rotating rod type.

Mounting Bracket Part No.

Bore size (mm)	Foot (1)	Flange
12	CQSK-L012	CQSK-F012
16	CQSK-L016	CQSK-F016
20	CQSK-L020	CQSK-F020
25	CQSK-L025	CQSK-F025

Note 1) When ordering foot bracket, order 2 pieces per cylinder.
Note 2) Parts belonging to each bracket are as follows.
Foot or Flange style: Body mounting bolt

Theoretical Output

(N)

Bore size (mm)	Rod width across flats (mm)	Piston area (mm^2)	Operating pressure (MPa)		
			0.3	0.5	0.7
12	5.2	90	27	45	63
16	6.2	168	50	84	117
20	8.2	256	77	128	179
25	10.2	401	120	200	281

Refer to pages 595 to 597 for cylinders with auto switches.

- Minimum auto switch mounting stroke
- Proper auto switch mounting position (detection at stroke end) and mounting height
- Operating range
- Switch mounting bracket/Part no.

Mass/Without Auto Switch

(g)

Bore size (mm)	Cylinder stroke (mm)									
	5	10	15	20	25	30	35	40	45	50
12	48	56	65	73	80	88	–	–	–	–
16	64	75	84	95	105	115	–	–	–	–
20	115	131	148	164	191	196	213	229	246	264
25	160	180	200	221	241	263	285	305	320	347

Mass/With Auto Switch (Built-in magnet)

(g)

Bore size (mm)										
	5	10	15	20	25	30	35	40	45	50
12	56	65	74	82	90	98	–	–	–	–
16	75	85	95	105	116	126	–	–	–	–
20	148	164	180	197	214	231	247	265	280	297
25	188	209	230	251	273	293	315	335	356	376

Additional Mass

(g)

Bore size (mm)		**12**	**16**	**20**	**25**
Rod end male thread	Male thread	1.5	3	6	12
	Nut	1	2	4	8
Foot style (Including mounting bolt)		55	64	158	179
Rod side flange style (Including mounting bolt)		58	69	142	178

Calculation: (Example) **CQSKWF20-5DM**

- Cylinder mass: CQSKWB20-5D····· 115 g
- Option mass: Rod end male thread····· 10 g
  : Rod side flange style····· 142 g

267 g

⚠Precautions

Operating Precautions

⚠Warning

1. Do not apply the reverse torque to the piston rods sticking out from both sides of this cylinder at the same time. The torque makes connection threads inside loosen, which may cause an accident or malfunction.
Install or remove a load while the piston rod width across flats are secured. Do not fix the other side of piston rod width across flat and apply the reverse torque.

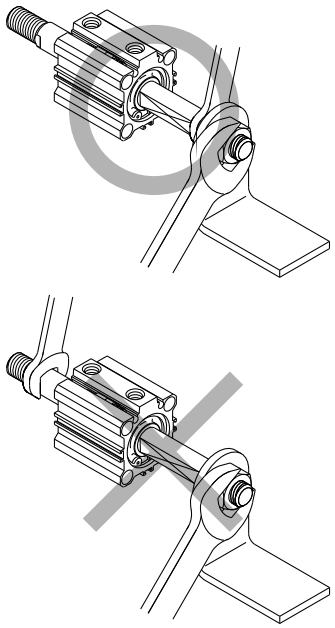

⚠Caution

1. Any kind of operation producing rotational torque to piston rod must be considered. The non-rotating guide would be deformed and the accuracy would be compromised.
Refer to the table below for rotation torque allowance.

Allowable rotational torque (N·m) or less	**ø12**	**ø16**	**ø20**	**ø25**
	0.04	0.04	0.2	0.25

2. Load to piston rod must always be in an axial direction.

Retaining Ring Installation/Removal

⚠Caution

1. For installation and removal, use an appropriate pair of pliers (tool for installing a type C retaining ring).

2. Even if a proper plier (tool for installing type C retaining ring) is used, it is likely to inflict damage to a human body or peripheral equipment, as a retaining ring may be flown out of the tip of a plier (tool for installing a type C retaining ring). Be much careful with the popping of a retaining ring. Besides, be certain that a retaining ring is placed firmly into the groove of rod cover before supplying air at the time of installment.

Construction

Basic style

ø12

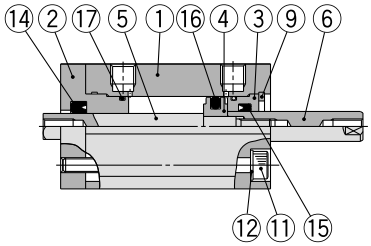

ø16, ø20, ø25

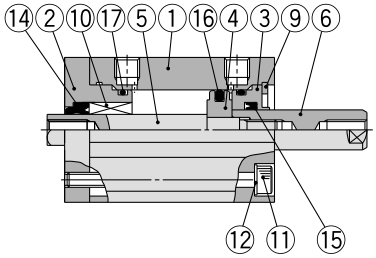

Rod end male thread

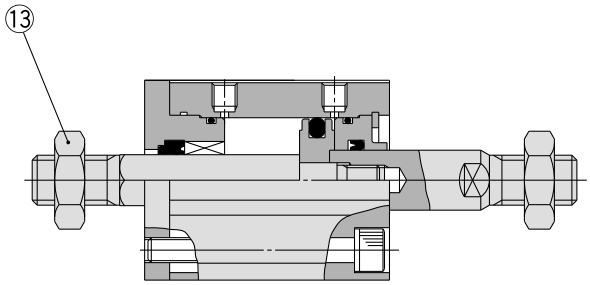

With auto switch (Built-in magnet)

ø12

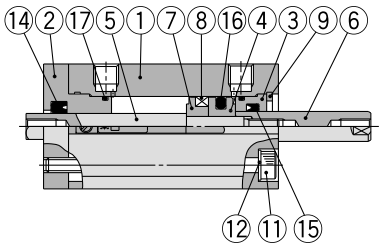

ø16

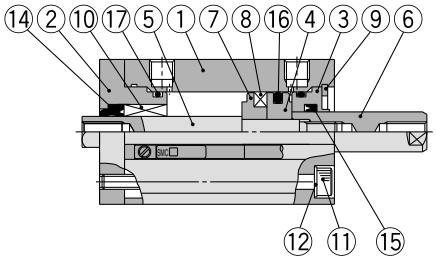

ø20, ø25

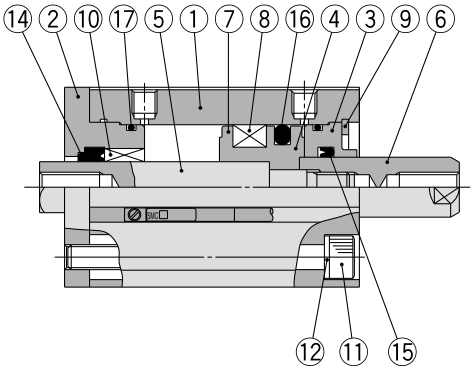

Component Parts

No.	Description	Material	Note
1	**Cylinder tube**	Aluminum alloy	Hard anodized
2	**Rod cover**	Aluminum alloy	Anodized
3	**Collar**	Aluminum alloy	Anodized
4	**Piston**	Aluminum alloy	Chromated
5	**Piston rod A**	Stainless steel	
6	**Piston rod B**	Stainless steel	
7	**Spacer for switch type**	Aluminum alloy	Chromated
8	**Magnet**	—	
9	**Retaining ring**	Carbon tool steel	Phosphate coated
10	**Non-rotating guide**	Oil impregnated sintered alloy	ø16, ø20 and ø25
11	**Hexagon socket head cap screw**	Alloy steel	Nickel plated
12	**Plain washer**	Rolled steel	Nickel plated
13	**Rod end nut**	Carbon steel	Nickel plated
14*	**Rod seal for non-rotating**	NBR	
15*	**Rod seal**	NBR	
16*	**Piston seal**	NBR	
17*	**Tube gasket**	NBR	

Replacement Parts/Seal Kit

Bore size (mm)	Kit no.	Contents
12	CQSKWB12-PS	Set of nos. above ⑭, ⑮, ⑯, ⑰.
16	CQSKWB16-PS	
20	CQSKWB20-PS	
25	CQSKWB25-PS	

* Seal kit includes ⑭, ⑮, ⑯, ⑰. Order the seal kit, based on each bore size.
* Since the seal kit does not include a grease pack, order it separately.
Grease pack part no.: GR-S-010 (10 g)

Mounting Bolt for CQSKW

Mounting method: Mounting bolt for through-hole mounting style of CQSKW is available as an option.
Ordering: Add the word "Bolt" in front of the bolts to be used.

Example) Bolt M3 x 30L 2 pcs.

Round rod side mounting

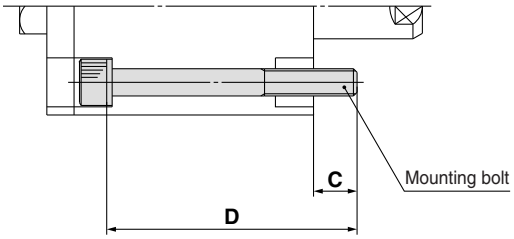

Non-rotating rod side mounting

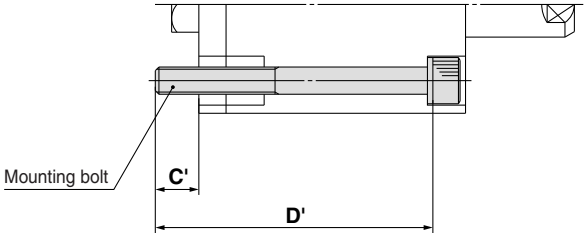

Note) When mounting a cylinder with through-hole, be sure to use the attached plain washer.

Cylinder model	C	D	Mounting bolt size	C'	D'	Mounting bolt size
CQSKWB12-5D	6.5	25	M3 x 30L	6.5	30	M3 x 35L
-10D		30	x 35L		35	x 40L
-15D		35	x 40L		40	x 45L
-20D		40	x 45L		45	x 50L
-25D		45	x 50L		50	x 55L
-30D		50	x 55L		55	x 60L
CQSKWB16-5D	6.5	25	M3 x 30L	6.5	30	M3 x 35L
-10D		30	x 35L		35	x 40L
-15D		35	x 40L		40	x 45L
-20D		40	x 45L		45	x 50L
-25D		45	x 50L		50	x 55L
-30D		50	x 55L		55	x 60L
CQSKWB20-5D	10	25	M5 x 35L	10	30	M5 x 40L
-10D		30	x 40L		35	x 45L
-15D		35	x 45L		40	x 50L
-20D		40	x 50L		45	x 55L
-25D		45	x 55L		50	x 60L
-30D		50	x 60L		55	x 65L
-35D		55	x 65L		60	x 70L
-40D		60	x 70L		65	x 75L
-45D		65	x 75L		70	x 80L
-50D		70	x 80L		75	x 85L
CQSKWB25-5D	7	30	M5 x 35L	7	35	M5 x 40L
-10D		35	x 40L		40	x 45L
-15D		40	x 45L		45	x 50L
-20D		45	x 50L		50	x 55L
-25D		50	x 55L		55	x 60L
-30D		55	x 60L		60	x 65L
-35D		60	x 65L		65	x 70L
-40D		65	x 70L		70	x 75L
-45D		70	x 75L		75	x 80L
-50D		75	x 80L		80	x 85L

Material: Chromium molybdenum steel
Surface treatment: Nickel plated

Mounting Bolt for CQSKW

Mounting method: Mounting bolt for through-hole mounting style of CDQSKW is available as an option.
Ordering: Add the word "Bolt" in front of the bolts to be used.

Example) Bolt M3 x 35L 2 pcs.

Round rod side mounting

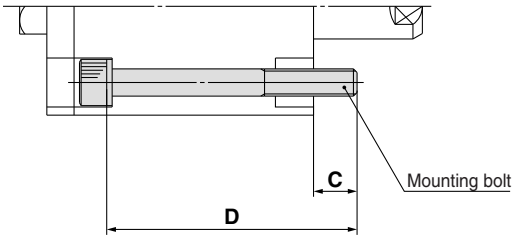

Non-rotating rod side mounting

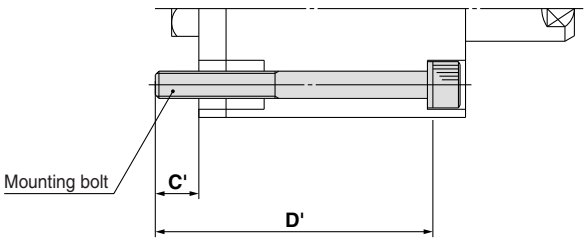

Note) When mounting a cylinder with through-hole, be sure to use the attached plain washer.

Cylinder model	C	D	Mounting bolt size	C'	D'	Mounting bolt size
CDQSKWB12-5D	6.5	30	M3 x 35L	6.5	35	M3 x 40L
-10D		35	x 40L		40	x 45L
-15D		40	x 45L		45	x 50L
-20D		45	x 50L		50	x 55L
-25D		50	x 55L		55	x 60L
-30D		55	x 60L		60	x 65L
CDQSKWB16-5D	6.5	30	M3 x 35L	6.5	35	M3 x 40L
-10D		35	x 40L		40	x 45L
-15D		40	x 45L		45	x 50L
-20D		45	x 50L		50	x 55L
-25D		50	x 55L		55	x 60L
-30D		55	x 60L		60	x 65L
CDQSKWB20-5D	10	35	M5 x 45L	10	40	x 50L
-10D		40	x 50L		45	x 55L
-15D		45	x 55L		50	x 60L
-20D		50	x 60L		55	x 65L
-25D		55	x 65L		60	x 70L
-30D		60	x 70L		65	x 75L
-35D		65	x 75L		70	x 80L
-40D		70	x 80L		75	x 85L
-45D		75	x 85L		80	x 90L
-50D		80	x 90L		85	x 95L
CDQSKWB25-5D	7	40	M5 x 45L	7	45	M5 x 50L
-10D		45	x 50L		50	x 55L
-15D		50	x 55L		55	x 60L
-20D		55	x 60L		60	x 65L
-25D		60	x 65L		65	x 70L
-30D		65	x 70L		70	x 75L
-35D		70	x 75L		75	x 80L
-40D		75	x 80L		80	x 85L
-45D		80	x 85L		85	x 90L
-50D		85	x 90L		90	x 95L

Material: Chromium molybdenum steel
Surface treatment: Nickel plated

Dimensions: ø12 to ø25

Basic style (Through-hole/Both ends tapped common): CQSKW/CDQSKW

∗ For the auto switch mounting position and its mounting height, refer to page 596.

ø12

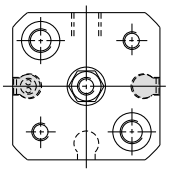

ø16

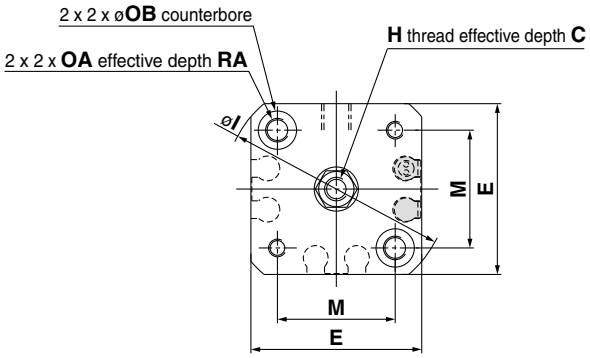

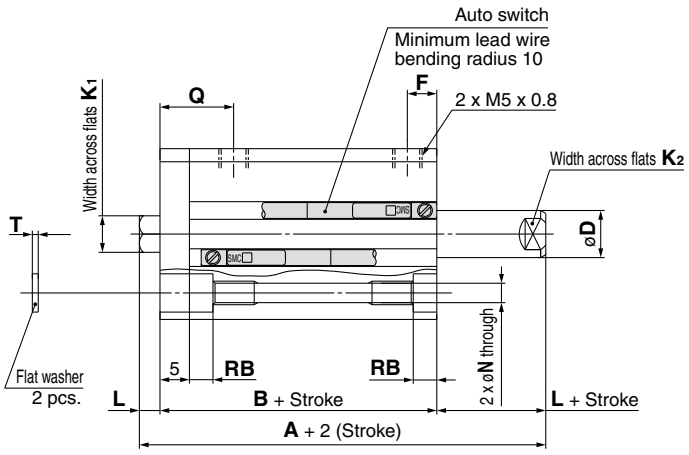

ø20, ø25

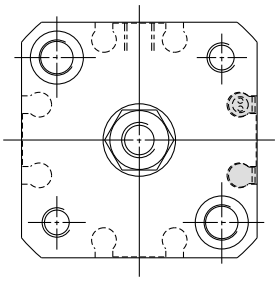

Rod end male thread

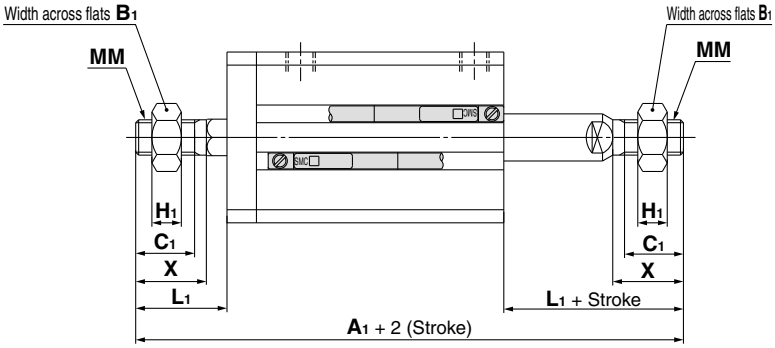

Rod End Male Thread

Bore size (mm)	Without auto switch A_1	With auto switch A_1	B_1	C_1	H_1	L_1	MM	X
12	55	60	8	9	4	14	M5 x 0.8	10.5
16	58	63	10	10	5	15.5	M6 x 1.0	12
20	68	78	13	12	5	18.5	M8 x 1.25	14
25	79	89	17	15	6	22.5	M10 x 1.25	17.5

Basic Style

Bore size (mm)	Stroke range (mm)	Without auto switch A	Without auto switch B	With auto switch A	With auto switch B	C	D	E	F	H	I	K_1	K_2	L	M	N	OA	OB	Q	RA	RB	T
12	5 to 30	34	27	39	32	6	6	25	7.5	M3 x 0.5	32	5.2	5	3.5	15.5	3.5	M4 x 0.7	6.5	12.5	7	4	0.5
16	5 to 30	34	27	39	32	8	8	29	7.5	M4 x 0.7	38	6.2	6	3.5	20	3.5	M4 x 0.7	6.5	12.5	7	4	0.5
20	5 to 50	40	31	50	41	7	10	36	9	M5 x 0.8	47	8.2	8	4.5	25.5	5.4	M6 x 1.0	9	14	10	7	1
25	5 to 50	44	34	54	44	12	12	40	11	M6 x 1.0	52	10.2	10	5	28	5.4	M6 x 1.0	9	16	10	7	1

Note 1) For basic style ø20 and ø25 with 5 stroke, through-hole is threaded over the entire length.
Note 2) The positions of width across flats (K_2) on both sides are not the same.
∗ For details about the rod end nut and accessory brackets, refer to page 620.

Dimensions: ø12 to ø25

Foot style: CQSKWL/CDQSKWL

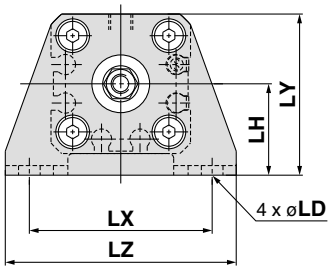

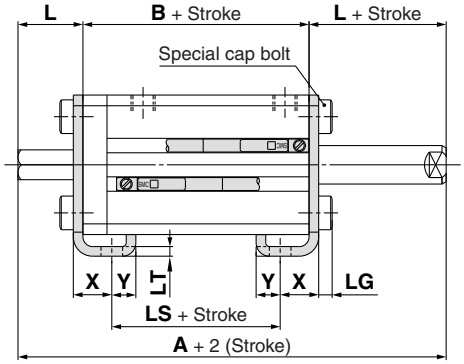

Rod end male thread

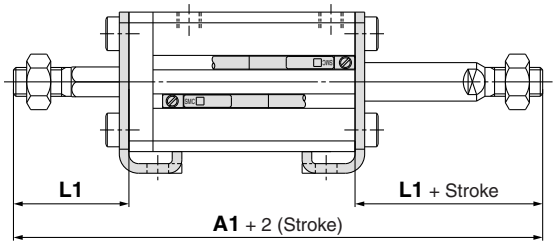

Foot Style

Bore size (mm)	Stroke range (mm)	Without auto switch				With auto switch				L	L1	LD	LG	LH	LT	LX	LY	LZ	X	Y
		A	A1	B	LS	A	A1	B	LS											
12	5 to 30	54	75	27	15	59	80	32	20	13.5	24	4.5	2.8	17	2	34	29.5	44	8	4.5
16	5 to 30	54	78	27	15	59	83	32	20	13.5	25.5	4.5	2.8	19	2	38	33.5	48	8	5
20	5 to 50	60	88	31	19	70	98	41	29	14.5	28.5	6.6	4	24	3.2	48	42	62	9.2	5.8
25	5 to 50	64	99	34	19	74	109	44	29	15	32.5	6.6	4	26	3.2	52	46	66	10.7	5.8

Foot bracket material: Carbon steel
Surface treatment: Nickel plated

Flange style: CQSKWF/CDQSKWF

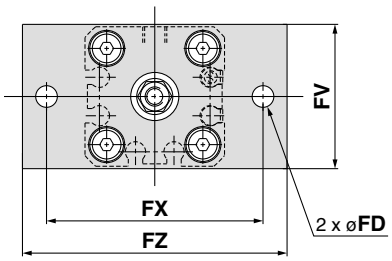

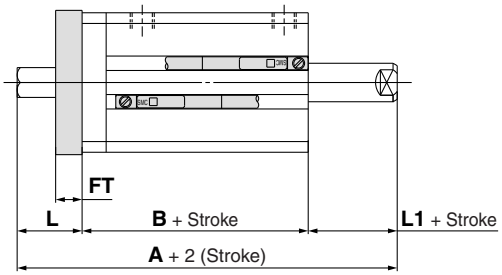

Rod end male thread

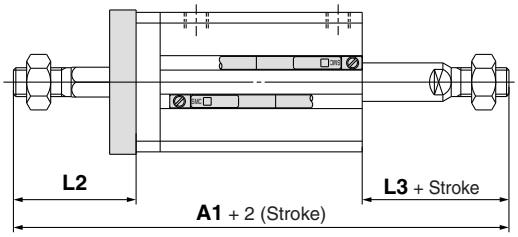

Flange Style

Bore size (mm)	Stroke range (mm)	Without auto switch			With auto switch			FD	FT	FV	FX	FZ	L	L1	L2	L3
		A	A1	B	A	A1	B									
12	5 to 30	44	65	27	49	70	32	4.5	5.5	25	45	55	13.5	3.5	24	14
16	5 to 30	44	68	27	49	73	32	4.5	5.5	30	45	55	13.5	3.5	25.5	15.5
20	5 to 50	50	78	31	60	88	41	6.6	8	39	48	60	14.5	4.5	28.5	18.5
25	5 to 50	54	89	34	64	99	44	6.6	8	42	52	64	15	5	32.5	22.5

∗ For details about the rod end nut and accessory brackets, refer to page 620.
Note 1) The positions of piston rod width across flats (right side) are not constant.

Flange bracket material: Carbon steel
Surface treatment: Nickel plated

Compact Cylinder: Anti-lateral Load Type

Series CQS□S

ø12, ø16, ø20, ø25

How to Order

CQS B S 20 – 30 D C – ☐

With auto switch **CDQS B S 20 – 30 D C – M9BW ☐ – ☐**

With auto switch
(Built-in magnet)

Mounting style

B	Through-hole/Both ends tapped common (Standard)
L	Foot style
F	Rod side flange style
G	Head side flange style
D	Double clevis style

∗ Mounting brackets are shipped together, (but not assembled).
∗ Cylinder mounting bolts are not included. Order them separately referring to "Mounting Bolt for CQSBS" on page 591.

Cushion

S	Anti-lateral load type

Bore size

12	12 mm
16	16 mm
20	20 mm
25	25 mm

Cylinder stroke (mm)

Standard Stroke

Bore size (mm)	Standard stroke (mm)
12, 16	5, 10, 15, 20, 25, 30
20, 25	5, 10, 15, 20, 25, 30, 35, 40, 45, 50

For "Manufacture of Intermediate Strokes", refer to page 590.

Action

D	Double acting

Body option

C	With rubber bumper Rod end female thread
CM	With rubber bumper Rod end male thread
CF	With rubber bumper Boss on head side

Auto switch

Nil	Without auto switch

∗ Refer to the table below for the applicable auto switch model.

Number of auto switches

Nil	2 pcs.
S	1 pc.
n	"n" pcs.

Made to Order
Refer to page 590 for details.

Built-in Magnet Cylinder Model

If a built-in magnet cylinder without an auto switch is required, there is no need to enter the symbol for the auto switch.
(Example) CDQSLS12-25D

Applicable Auto Switch/Refer to pages 1263 to 1371 for further information on auto switches.

Type	Special function	Electrical entry	Indicator light	Wiring (Output)	Load voltage DC	Load voltage DC	Load voltage AC	Auto switch model Perpendicular	Auto switch model In-line	Lead wire length (m) 0.5 (Nil)	1 (M)	3 (L)	5 (Z)	Pre-wired connector	Applicable load	
Solid state switch	—	Grommet	Yes	3-wire (NPN)	24 V	5 V, 12 V	—	**M9NV**	**M9N**	●	●	●	○	○	IC circuit	Relay, PLC
				3-wire (PNP)				**M9PV**	**M9P**	●	●	●	○	○		
				2-wire		12 V		**M9BV**	**M9B**	●	●	●	○	○	—	
	Diagnostic indication (2-color indication)			3-wire (NPN)		5 V, 12 V		**M9NWV**	**M9NW**	●	●	●	○	○	IC circuit	
				3-wire (PNP)				**M9PWV**	**M9PW**	●	●	●	○	○		
				2-wire		12 V		**M9BWV**	**M9BW**	●	●	●	○	○	—	
	Water resistant (2-color indication)			3-wire (NPN)		5 V, 12 V		**M9NAV**	**M9NA**	○	○	●	○	○	IC circuit	
				3-wire (PNP)				**M9PAV**	**M9PA**	○	○	●	○	○		
				2-wire		12 V		**M9BAV**	**M9BA**	○	○	●	○	○	—	
Reed switch	—	Grommet	Yes	3-wire (NPN equivalent)	—		—	**A96V**	**A96**	●	—	●	—	—	IC circuit	—
			No	2-wire	24 V		100 V	**A93V**	**A93**	●	—	●	—	—	—	Relay, PLC
							100 V or less	**A90V**	**A90**	●	—	●	—	—	IC circuit	

∗ Lead wire length symbols: 0.5 m····· Nil (Example) M9NW
1 m····· M (Example) M9NWM
3 m····· L (Example) M9NWL
5 m····· Z (Example) M9NWZ

∗ Solid state auto switches marked with "○" are produced upon receipt of order.

∗ Since there are other applicable auto switches than listed, refer to page 597 for details.
∗ For details about auto switches with pre-wired connector, refer to pages 1328 and 1329.
∗ Auto switches are shipped together (not assembled).
Note) There is the case A9□V/M9□V/M9□WV/M9□AVL type auto switches cannot be mounted on the port surface, depending on the cylinder's stroke and the fitting size for piping. Consult with SMC for details.



Standard Specifications

Bore size (mm)	12	16	20	25
Action	Double acting, Single rod			
Fluid	Air			
Lubrication	Not required (Non-lube)			
Proof pressure	1.5 MPa			
Maximum operating pressure	1.0 MPa			
Minimum operating pressure	0.07 MPa		0.05 MPa	
Ambient and fluid temperature	Without auto switch: –10 to 70°C (No freezing)			
	With auto switch: –10 to 60°C (No freezing)			
Cushion	Rubber bumper*			
Rod end thread	Female thread			
Stroke length tolerance	$^{+1.0}_{0}$ mm*			
Mounting	Through-hole/Both ends tapped common			
Piston speed	50 to 500 mm/s			
Allowable kinetic energy (J)	0.043	0.075	0.11	0.18

* Stroke length tolerance does not include the deflection of the bumper.

JIS Symbol

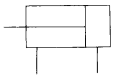

Made to Order Specifications

(For details, refer to pages 1401, 1426 and 1508.)

Symbol	Specifications
–XB10	Intermediate stroke (Using exclusive body)
–XC6	Piston rod, retaining ring, rod end nut made of stainless steel
–X271	Fluororubber seals
–X1876	With concave shape end boss on the cylinder tube head side

Theoretical Output



(N)

Bore size (mm)	Rod size (mm)	Operating direction	Piston area (mm^2)	Operating pressure (MPa)		
				0.3	0.5	0.7
12	6	IN	84.8	25	42	59
		OUT	113	34	57	79
16	8	IN	151	45	75	106
		OUT	201	60	101	141
20	10	IN	236	71	118	165
		OUT	314	94	157	220
25	12	IN	378	113	189	264
		OUT	491	147	245	344

Body Option

Description	Application
Rod end male thread	Available for Double acting, Single rod models.

Mounting Bracket Part No.

Bore size (mm)	Foot (1)	Flange	Double clevis
12	CQS-L012	CQS-F012	CQS-D012
16	CQS-L016	CQS-F016	CQS-D016
20	CQS-L020	CQS-F020	CQS-D020
25	CQS-L025	CQS-F025	CQS-D025

Note1) When ordering foot bracket, order 2 pieces per cylinder.
Note2) Parts belonging to each bracket are as follows.
Foot or Flange style: Body mounting bolt
Double clevis style: Clevis pin, type C retaining ring for axis, Body mounting bolt

Manufacture of Intermediate Stroke

Description		Spacer is installed in the standard stroke body.	
Part no.		Refer to "How to Order" for the standard model no. (page 589).	
Standard stroke	Description	Intermediate strokes by the 1 mm interval are available by using spacers with standard stroke cylinders.	
	Stroke range	Bore size	Stroke range
		12, 16	1 to 29
		20, 25	1 to 49
Example		Part no.: CQSBS25–47D CQSBS25-50D with 3 mm width spacer inside. B dimension is 77.5 mm.	

Refer to pages 595 to 597 for cylinders with auto switches.

- Minimum auto switch mounting stroke
- Proper auto switch mounting position (detection at stroke end) and mounting height
- Operating range
- Switch mounting bracket/Part no.

Mass/Without Auto Switch

(g)

Bore size (mm)	Cylinder stroke (mm)									
	5	10	15	20	25	30	35	40	45	50
12	37	43	50	57	63	70	–	–	–	–
16	49	57	66	74	83	92	–	–	–	–
20	75	88	101	114	127	140	153	165	178	191
25	109	125	140	156	172	188	204	220	236	252

Mass/With Auto Switch (Built-in magnet)

(g)

Bore size (mm)	Cylinder stroke (mm)									
	5	10	15	20	25	30	35	40	45	50
12	45	51	58	65	71	78	–	–	–	–
16	59	67	76	85	94	103	–	–	–	–
20	106	119	132	145	157	170	183	195	208	221
25	151	167	183	199	215	231	246	262	278	294

Additional Mass

(g)

Bore size (mm)		**12**	**16**	**20**	**25**
Rod end male thread	Male thread	1.5	3	6	12
	Nut	1	2	4	8
Foot style (Including mounting bolt)		55	65	159	181
Rod side flange style (Including mounting bolt)		58	70	143	180
Head side flange style (Including mounting bolt)		56	66	137	171
Double clevis style (Including pin, retaining ring, bolt)		34	40	92	127

For standard strokes

Calculation: (Example) **CQSDS20-20DCM**

- Cylinder mass: CQSBS20-20DC ····· 114 g
- Option mass: Rod end male thread ····· 10 g
  : Double clevis style ····· 92 g

216 g

Mounting Bolt for CQSBS

Mounting method: Mounting bolt for through-hole mounting style of CQSBS is available as an option.

Ordering: Add the word "Bolt" in front of the bolts to be used.

Example) Bolt M3 x 30L 4 pcs.

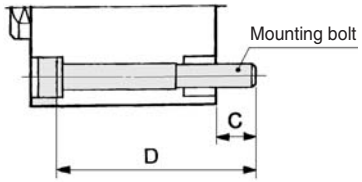

Note) When mounting a cylinder with through-hole, be sure to use the attached plain washer.

Cylinder model	C	D	Mounting bolt size
CQSBS12–5DC	6.5	30	M3 x 30L
–10DC		35	x 35L
–15DC		40	x 40L
–20DC		45	x 45L
–25DC		50	x 50L
–30DC		55	x 55L
CQSBS16–5DC	6.5	30	M3 x 30L
–10DC		35	x 35L
–15DC		40	x 40L
–20DC		45	x 45L
–25DC		50	x 50L
–30DC		55	x 55L
CQSBS20–5DC	6.5	30	M5 x 30L
–10DC		35	x 35L
–15DC		40	x 40L
–20DC		45	x 45L

Cylinder model	C	D	Mounting bolt size
CQSBS20–25DC	6.5	50	M5 x 50L
–30DC		55	x 55L
–35DC		60	x 60L
–40DC		65	x 65L
–45DC		70	x 70L
–50DC		75	x 75L
CQSBS25–5DC	8.5	35	M5 x 35L
–10DC		40	x 40L
–15DC		45	x 45L
–20DC		50	x 50L
–25DC		55	x 55L
–30DC		60	x 60L
–35DC		65	x 65L
–40DC		70	x 70L
–45DC		75	x 75L
–50DC		80	x 80L

Material: Chromium molybdenum steel
Surface treatment: Nickel plated

Mounting Bolt for CDQSBS with Auto Switch

Mounting method: Mounting bolt for through-hole mounting style of CQQSBS is available as an option.

Ordering: Add the word "Bolt" in front of the bolts to be used.

Example) Bolt M3 x 35L 4 pcs.

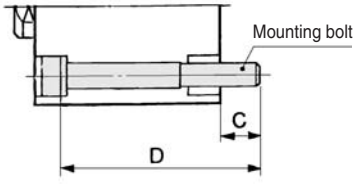

Note) When mounting a cylinder with through-hole, be sure to use the attached plain washer.

Cylinder model	C	D	Mounting bolt size
CDQSBS12–5DC	6.5	35	M3 x 35L
–10DC		40	x 40L
–15DC		45	x 45L
–20DC		50	x 50L
–25DC		55	x 55L
–30DC		60	x 60L
CDQSBS16–5DC	6.5	35	M3 x 35L
–10DC		40	x 40L
–15DC		45	x 45L
–20DC		50	x 50L
–25DC		55	x 55L
–30DC		60	x 60L
CDQSBS20–5DC	6.5	40	M5 x 40L
–10DC		45	x 45L
–15DC		50	x 50L
–20DC		55	x 55L

Cylinder model	C	D	Mounting bolt size
CDQSBS20–25DC	6.5	60	M5 x 60L
–30DC		65	x 65L
–35DC		70	x 70L
–40DC		75	x 75L
–45DC		80	x 80L
–50DC		85	x 85L
CDQSBS25–5DC	8.5	45	M5 x 45L
–10DC		50	x 50L
–15DC		55	x 55L
–20DC		60	x 60L
–25DC		65	x 65L
–30DC		70	x 70L
–35DC		75	x 75L
–40DC		80	x 80L
–45DC		85	x 85L
–50DC		90	x 90L

Material: Chromium molybdenum steel
Surface treatment: Nickel plated

Construction

Basic style

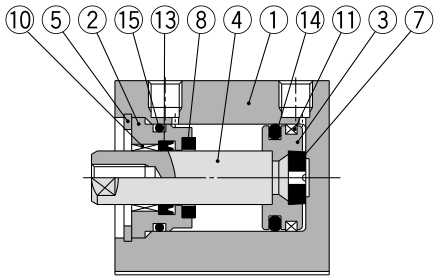

Rod end male thread

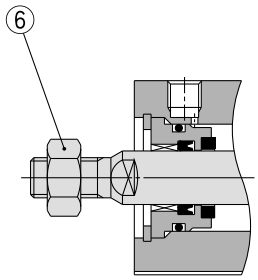

With auto switch (Built-in magnet)
ø12, ø16

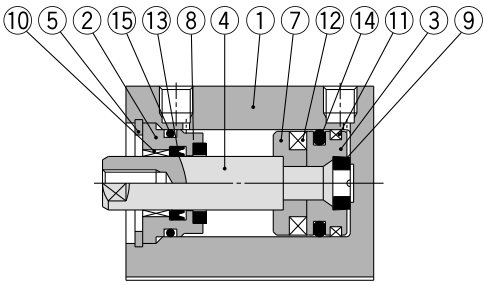

ø20, ø25

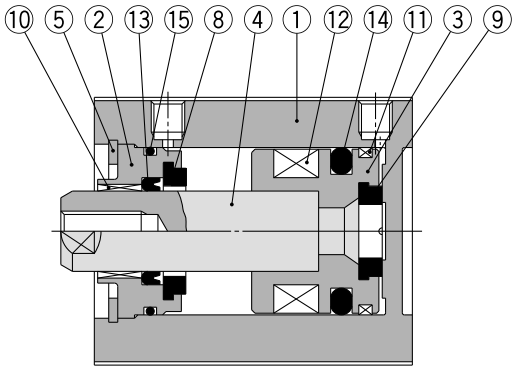

Component Parts

No.	Description	Material	Note
1	**Cylinder tube**	Aluminum alloy	Hard anodized
2	**Collar**	Aluminum alloy	Anodized
3	**Piston**	Aluminum alloy	Chromated
4	**Piston rod**	Stainless steel	
5	**Retaining ring**	Carbon tool steel	Phosphate coated
6	**Rod end nut**	Carbon steel	Nickel plated
7	**Spacer for switch type**	Aluminum alloy	Chromated
8	**Bumper A**	Urethane	
9	**Bumper B**	Urethane	
10	**Bushing**	Oil-impregnated sintered alloy	
11	**Wear ring**	Resin	
12	**Magnet**	—	
13*	**Rod seal**	NBR	
14*	**Piston seal**	NBR	
15*	**Tube gasket**	NBR	

Replacement Parts/Seal Kit

Bore size (mm)	Kit no.	Contents
12	CQSB12-PS	Set of nos. above ⑬, ⑭, ⑮.
16	CQSB16-PS	
20	CQSB20-PS	
25	CQSB25-PS	

* Seal kit includes ⑬, ⑭, ⑮. Order the seal kit, based on each bore size.
* Since the seal kit does not include a grease pack, order it separately.
Grease pack part no.: GR-S-010 (10 g)

Dimensions: ø12 to ø25

Basic style (Through-hole/Both ends tapped common): CQSBS/CDQSBS

ø12

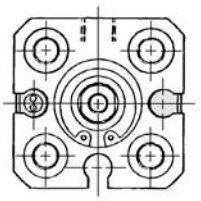

ø16

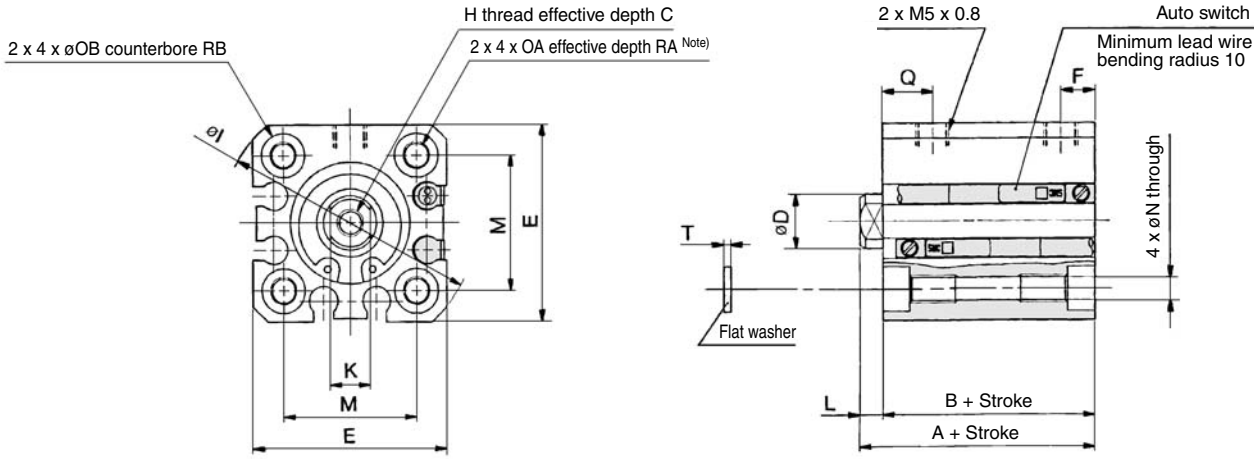

ø20, ø25

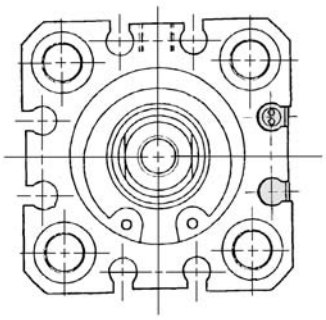

Rod end male thread

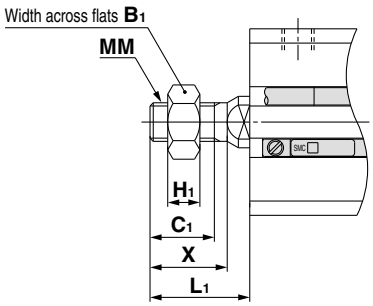

Rod End Male Thread

Bore size (mm)	B_1	C_1	H_1	L_1	MM	X
12	8	9	4	14	M5 x 0.8	10.5
16	10	10	5	15.5	M6 x 1.0	12
20	13	12	5	18.5	M8 x 1.25	14
25	17	15	6	22.5	M10 x 1.25	17.5

Basic Style

Bore size (mm)	Stroke range (mm)	Without auto switch		With auto switch		C	D	E	F	H	I	K	L	M	N	OA	OB	Q	RA	RB	T
		A	B	A	B																
12	5 to 30	25.5	22	30.5	27	6	6	25	5	M3 x 0.5	32	5	3.5	15.5	3.5	M4 x 0.7	6.5	7.5	7	4	0.5
16	5 to 30	25.5	22	30.5	27	8	8	29	5	M4 x 0.7	38	6	3.5	20	3.5	M4 x 0.7	6.5	7.5	7	4	0.5
20	5 to 50	29	24.5	39	34.5	7	10	36	5.5	M5 x 0.8	47	8	4.5	25.5	5.4	M6 x 1.0	9	9	10	7	1
25	5 to 50	32.5	27.5	42.5	37.5	12	12	40	5.5	M6 x 1.0	52	10	5	28	5.4	M6 x 1.0	9	11	10	7	1

Note) For basic style 5 to10 stroke with ø20 and 5 stroke with ø25, through-hole is threaded over the entire length.
∗ For details about the rod end nut and accessory brackets, refer to page 620.

Dimensions: ø12 to ø25

Foot style: CQSLS/CDQSLS

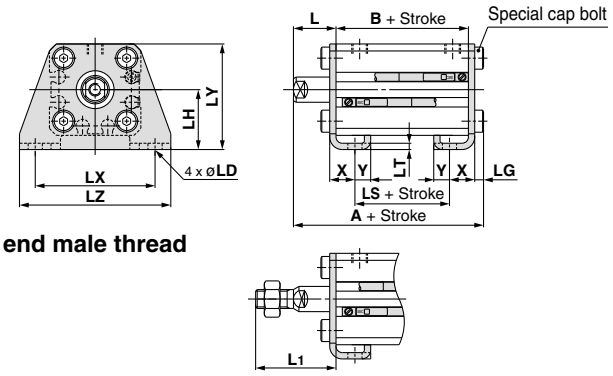

Rod end male thread

Foot Style

Bore size (mm)	Stroke range (mm)	Without auto switch			With auto switch		
		A	B	LS	A	B	LS
12	5 to 30	40.3	22	10	45.3	27	15
16	5 to 30	40.3	22	10	45.3	27	15
20	5 to 50	46.2	24.5	12.5	56.2	34.5	22.5
25	5 to 50	49.7	27.5	12.5	59.7	37.5	22.5

Bore size (mm)	L	L_1	LD	LG	LH	LT	LX	LY	LZ	X	Y
12	13.5	24	4.5	2.8	17	2	34	29.5	44	8	4.5
16	13.5	25.5	4.5	2.8	19	2	38	33.5	48	8	5
20	14.5	28.5	6.6	4	24	3.2	48	42	62	9.2	5.8
25	15	32.5	6.6	4	26	3.2	52	46	66	10.7	5.8

Foot bracket material: Carbon steel
Surface treatment: Nickel plated

Rod side flange style: CQSFS/CDQSFS

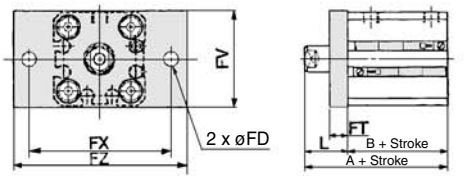

Rod end male thread

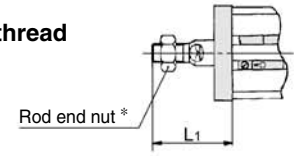

Rod Side Flange Style

Bore size (mm)	Stroke range (mm)	Without auto switch		With auto switch	
		A	B	A	B
12	5 to 30	35.5	22	40.5	27
16	5 to 30	35.5	22	40.5	27
20	5 to 50	39	24.5	49	34.5
25	5 to 50	42.5	27.5	52.5	37.5

Bore size (mm)	FD	FT	FV	FX	FZ	L	L_1
12	4.5	5.5	25	45	55	13.5	24
16	4.5	5.5	30	45	55	13.5	25.5
20	6.6	8	39	48	60	14.5	28.5
25	6.6	8	42	52	64	15	32.5

Flange bracket material: Carbon steel
Surface treatment: Nickel plated

Head side flange style: CQSGS/CDQSGS

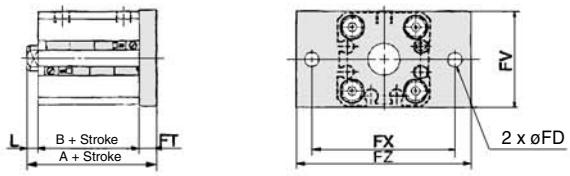

Rod end male thread

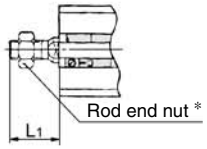

Head Side Flange Style

Bore size (mm)	Stroke range (mm)	Without auto switch		With auto switch	
		A	B	A	B
12	5 to 30	31	22	36	27
16	5 to 30	31	22	36	27
20	5 to 50	37	24.5	47	34.5
25	5 to 50	40.5	27.5	50.5	37.5

Bore size (mm)	FD	FT	FV	FX	FZ	L	L_1
12	4.5	5.5	25	45	55	3.5	14
16	4.5	5.5	30	45	55	3.5	15.5
20	6.6	8	39	48	60	4.5	18.5
25	6.6	8	42	52	64	5	22.5

Flange bracket material: Carbon steel
Surface treatment: Nickel plated

Double clevis style: CQSDS/CDQSDS

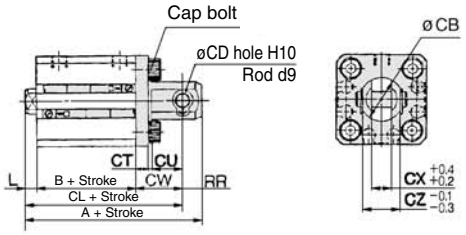

Rod end male thread

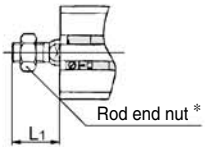

Double Clevis Style

Bore size (mm)	Stroke range (mm)	Without auto switch			With auto switch		
		A	B	CL	A	B	CL
12	5 to 30	45.5	22	39.5	50.5	27	44.5
16	5 to 30	46.5	22	40.5	51.5	27	45.5
20	5 to 50	56	24.5	47	66	34.5	57
25	5 to 50	62.5	27.5	52.5	72.5	37.5	62.5

Bore size (mm)	CB	CD	CT	CU	CW	CX	CZ	L	L_1	RR
12	12	5	4	7	14	5	10	3.5	14	6
16	14	5	4	10	15	6.5	12	3.5	15.5	6
20	20	8	5	12	18	8	16	4.5	18.5	9
25	24	10	5	14	20	10	20	5	22.5	10

Double clevis bracket material: Carbon steel
Surface treatment: Nickel plated

∗ For details about the rod end nut and accessory brackets, refer to page 620.

Proper Auto Switch Mounting Position (Detection at stroke end) and Its Mounting Height

● Double acting: Single rod, Single acting: Single rod, Spring return/Spring extend; Long stroke type, Anti-lateral load type, ● Double acting: Double rod)

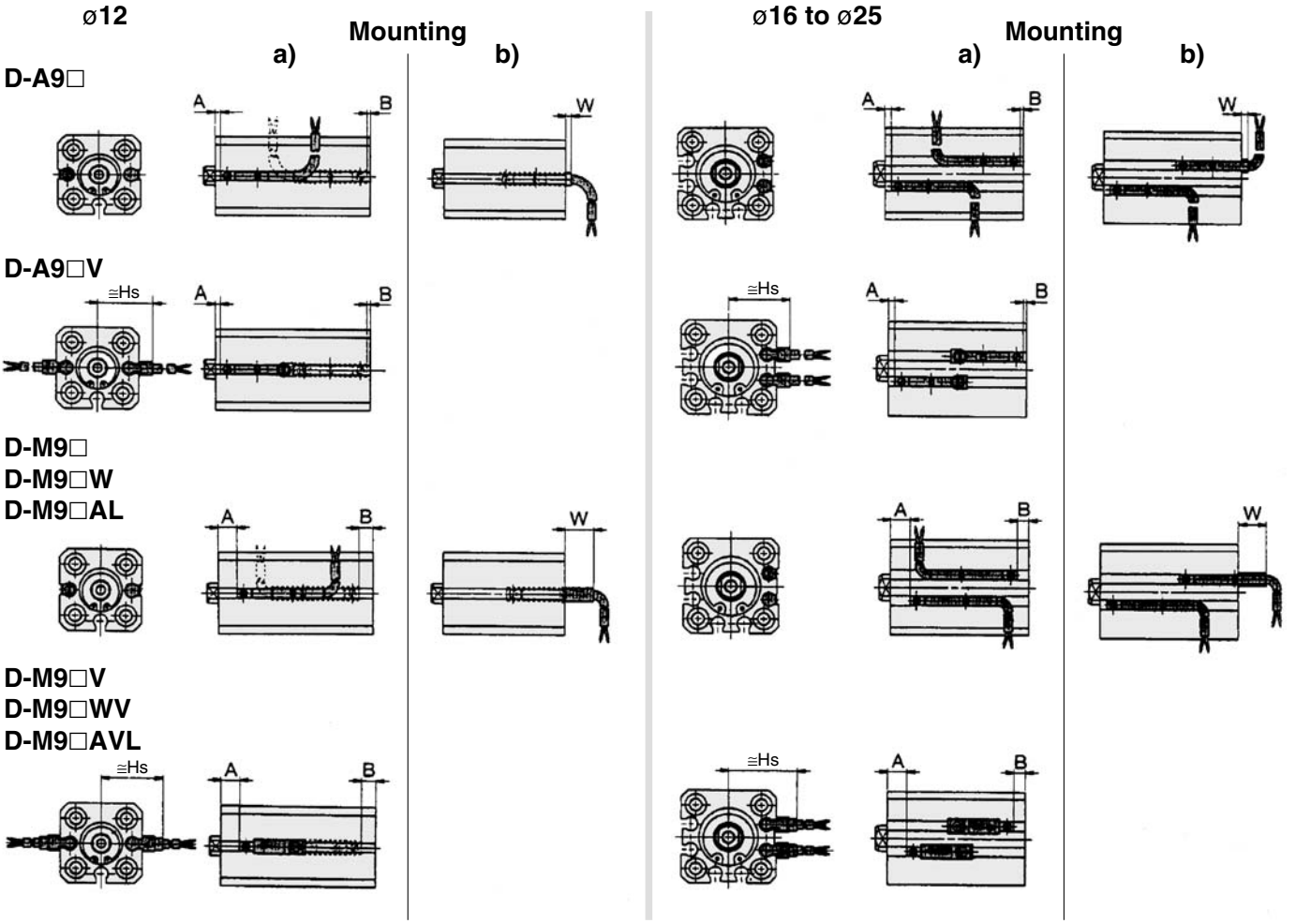

Proper Auto Switch Mounting Position (Detection at stroke end)

● Double acting: Single rod, Single acting: Single rod, Spring return/Spring extend; Long stroke type, Anti-lateral load type, ● Double acting: Double rod)

Proper Auto Switch Mounting Position

Bore size (mm) \ Auto switch model	D-A9□			D-A9□V			D-M9□/M9□W			D-M9□V/M9□WV/M9□AVL			D-M9□AL		
	A	B	W	A	B	Hs	A	B	W	A	B	Hs	A	B	W
Double Acting, Single Rod; Single Acting, Single Rod, Spring Return/Spring Extend															
12	1.5 (2.5)	0	1.5 [4] (2.5 [5])	1.5 (2.5)	0	17	5.5 (6.5)	3.5 (4.5)	5.5 (6.5)	5.5 (6.5)	3.5 (4.5)	19.5	5.5 (6.5)	3.5 (4.5)	7.5 (8.5)
16	2	0	2 [4.5]	2	0	19	6	4	6	6	4	21.5	6	4	8
20	6	3.5	–1.5 [1]	6	3.5	22.5	10	7.5	2.5	10	7.5	25	10	7.5	4.5
25	7	5.5	–3.5 [–1]	7	5.5	24.5	11	9.5	0.5	11	9.5	27	11	9.5	2.5
Long Stroke															
12	5	7	–5 [-2.5]	5	7	17	9	11	–1	9	11	19.5	9	11	1
16	5.5	6	–4.5 [–2]	5.5	6	19	9.5	10.5	–0.5	9.5	10.5	21.5	9.5	10.5	1.5
20	9	12	–10 [–7.5]	9	12	22.5	13	16	–6	13	16	25	13	16	–4
25	10	14	–12 [–9.5]	10	14	24.5	14	18	–8	14	18	27	14	18	–6
Anti-lateral Load Type															
12	6	1	1 [3.5]	6	1	17	10	5	5	10	5	19.5	10	5	7
16	5.5	5	0.5 [3]	5.5	5	19	9.5	9	4.5	9.5	9	21.5	9.5	9	6.5
20	9	5.5	–3.5 [–1]	9	5.5	22.5	13	9.5	0.5	13	9.5	25	13	9.5	2.5
25	10	7.5	–5.5 [–3]	10	7.5	24.5	14	11.5	–1.5	14	11.5	27	14	11.5	0.5
Double Acting, Double Rod															
12	1.5	5.5	3.5 [6]	1.5	5.5	17	5.5	9.5	0.5	5.5	9.5	19.5	5.5	9.5	2.5
16	2	5	3 [5.5]	2	5	19	6	9	1	6	9	21.5	6	9	3
20	6	10	8 [10.5]	6	10	22.5	10	14	–4	10	14	25	10	14	–2
25	7	12	10 [12.5]	7	12	24.5	11	16	–6	11	16	27	11	16	–4

[ ]: Denotes the values of D-A93. ( ): Denotes the values of type T.

Note 1) The product is shipped out of the factory in installation state "a)". To change the electrical entry direction of the switch on the head, refer to installation state "b)".
Note 2) Negative figures in the table W indicate an auto switch is mounted inward from the edge of the cylinder body.
Note 3) The D-M9□/M9□W and M9□AL cannot be installed on the single acting: single rod type.
Note 4) Adjust the auto switch after confirming the operating conditions in the actual setting.

Proper Auto Switch Mounting Position (Detection at stroke end)

Non-rotating rod

ø12

Mounting

a) **b)**

D-A9□

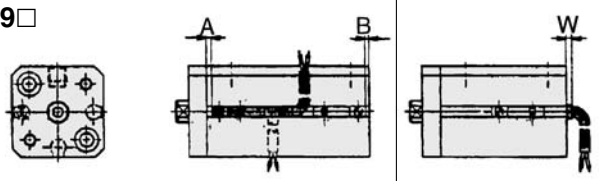

D-A9□V

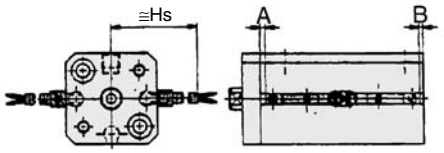

D-M9□
D-M9□W
D-M9□AL

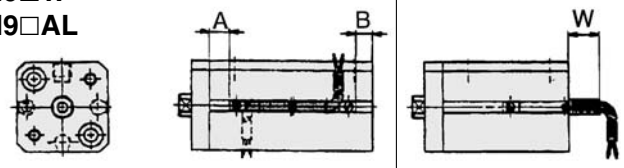

D-M9□V
D-M9□WV
D-M9□AVL

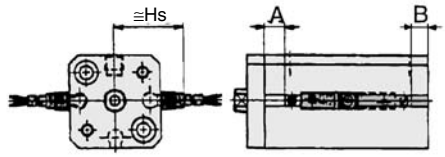

ø16 to ø25

Mounting

a) **b)**

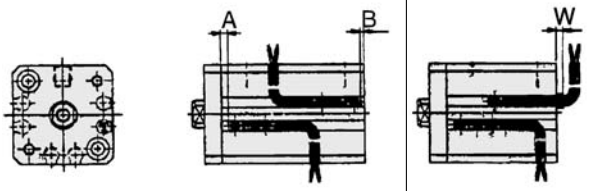

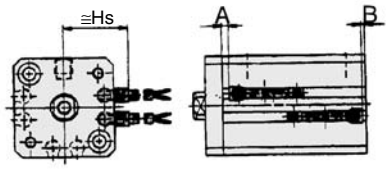

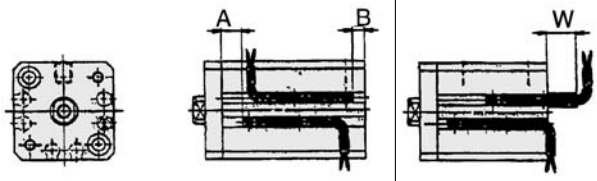

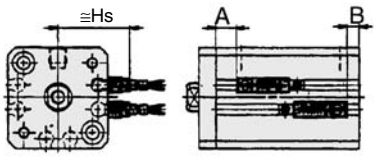

Proper Auto Switch Mounting Position

Auto switch model / Bore size (mm)	D-A9□			D-A9□V			D-M9□/M9□W			D-M9□V/M9□WV/M9□AVL		
	A	B	W	A	B	Hs	A	B	W	A	B	Hs
12	1.5	0	1.5 (4)	1.5	0	17	5.5	4.5	5.5	5.5	4.5	19.5
16	2	0	2 (4.5)	2	0	19	6	4	6	6	4	21.5
20	6	3.5	–1.5 (1)	6	3.5	22.5	10	7.5	2.5	10	7.5	25
25	7	5.5	–3.5 (–1)	7	5.5	24.5	11	9.5	0.5	11	9.5	27

( ): Denotes the values of D-A93.

Auto switch model / Bore size (mm)	D-M9□AL		
	A	B	W
12	5.5	4.5	7.5
16	6	4	8
20	10	7.5	4.5
25	11	9.5	2.5

Note 1) The product is shipped out of the factory in installation state “a)”. To change the electrical entry direction of the switch on the head, refer to installation state “b)”.

Note 2) Adjust the auto switch after confirming the operating conditions in the actual setting.

Operating Range

(mm)

Auto switch model	Bore size (mm)			
	12	16	20	25
D-A9□/A9□V	6	7.5	10	10
D-M9□/M9□V **D-M9□W/M9□WV** **D-M9□AL/M9□AVL**	3	4	5.5	5.5

∗ Since this is a guideline including hysteresis, not meant to be guaranteed. (assuming approximately ±30% dispersion.) There may be the case it will vary substantially depending on an ambient environment.

Minimum Auto Switch Mounting Stroke

(mm)

No. of auto switch mounted	**D-M9□V**	**D-A9□** **D-M9□WV** **D-M9□AVL**	**D-A9□V**	**D-M9□** **D-M9□W** **D-M9□AL**
1 pc.	5	10 (1)	5	15 (1)
2 pcs.	5	10	10	15 (1)

Note 1) When the cylinder is used under the strokes indicated, consult with SMC.
Note 2) The D-M9□/M9□W and M9□AL cannot be installed on the single acting: single rod type.

⚠ Precautions

Be sure to read before handling.
Refer to front matters 54 and 55 for Safety Instructions and pages 3 to 11 for Actuator and Auto Switch Precautions.

• If the cylinder is used in an application in which a magnetic material is placed in close contact around the cylinder as shown in the graph on the right (including cases in which even one of the sides is in close contact) the operation of auto switches could become unstable. Therefore, please check with SMC for this type of application.

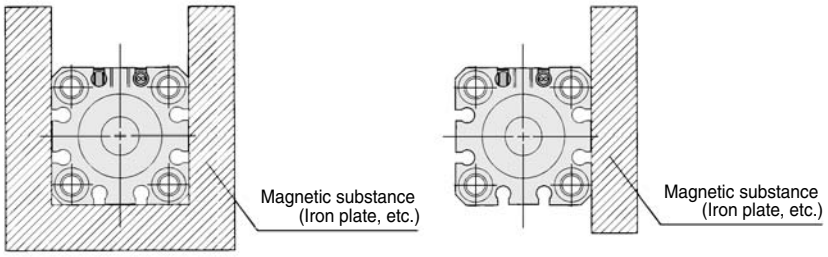

Other than the applicable auto switches listed in “How to Order”, the following auto switches can be mounted.
∗ Normally closed (NC = b contact), solid state auto switch (D-F9G/F9H type, and D-F8 type) are also available. For details, refer to pages 1289 and 1290.
∗ For solid state auto switches, auto switches with a pre-wired connector are also available. Refer to pages 1328 and 1329 for details.

Series 10-/11-CQSX

Low speed cylinder
ø12, ø16, ø20, ø25

How to Order

Clean series

10	Relief type
11	Vacuum suction type

10 — C D QSX B 20 — 30 D □ — M9B □

Built-in magnet

Nil	No
D	With auto switch (Built-in magnet)

Low speed cylinder

Mounting

B	Through-hole/Both ends tapped (Standard)

Bore size

12	12mm
16	16mm
20	20mm
25	25mm

Cylinder stroke (mm)

Bore size (mm)	Standard stroke (mm)
12, 16	5, 10, 15, 20, 25, 30
20	5, 10, 15, 20, 25, 30, 35, 40, 45, 50
25	

·Manufacturing of intermediate stroke
Intermediate strokes by the 1mm interval are available by using spacers with standard stroke cylinders. The overall length of cylinder will be the same as the standard stroke with a longer one.

Example) 10-CQSXB25-47D : Install a 3mm width spacer in a standard stroke cylinder, 10-CQSXB25-50D.

Action

D	Double acting

Rod end thread

Nil	Standard (Rod end female thread)
M	Rod end male thread

Type of auto switch

Reed switch	A93
Solid state switch	F9B, F91

Number of auto switches

Nil	2 pcs.
S	1 pc.
n	n pcs.



Model

Model		Bore size (mm)	Port size	Lubrication	Action	Standard stroke (mm)	Auto switch mounting	Cushion	
								Rubber	Air
Relief type	**10-CQSXB12**	12	M5 x 0.8	Non-lube	Double acting single rod	5, 10, 15, 20, 25, 30	○	—	—
	10-CQSXB16	16				5, 10, 15, 20, 25, 30, 35, 40, 45, 50			
	10-CQSXB20	20							
	10-CQSXB25	25							
Vacuum suction type	**11-CQSXB12**	12				5, 10, 15, 20, 25, 30			
	11-CQSXB16	16							
	11-CQSXB20	20				5, 10, 15, 20, 25, 30, 35, 40, 45, 50			
	11-CQSXB25	25							

Specifications

Bore size (mm)		10- (Relief type)			
		12	16	20	25
Fluid		Air			
Proof pressure		1.5MPa			
Max. operating pressure		1.0MPa			
Min. operating pressure		0.04MPa		0.035MPa	
Ambient and fluid temperature		Without auto switch : –10 to 70°C (With no freezing)			
		With auto switch : –10 to 60°C (With no freezing)			
Piston speed		1 to 200 mm/s			
Piston rod diameter		ø6	ø8	ø10	ø12
Rod end thread	**Female thread**	M3 x 0.5	M4 x 0.7	M5 x 0.8	M6 x 1.0
	Male thread	M5 x 0.8	M6 x 1.0	M8 x 1.25	M10 x 1.25
Rod end thread tolerance		JIS Class 2			
Stroke tolerance		$^{+1.0}_{0}$ mm			
Port size		M5 x 0.8			
Relief port		M5 x 0.8			
Grease		Fluorine grease			
Particle generation grade		Grade 2			

Bore size (mm)		11- (Vacuum suction type)			
		12	16	20	25
Fluid		Air			
Proof pressure		1.5MPa			
Max. operating pressure		1.0MPa			
Min. operating pressure		0.03MPa		0.025MPa	
Ambient and fluid temperature		Without auto switch : –10 to 70°C			
		With auto switch : –10 to 60°C			
Piston speed		1 to 200 mm/s		0.5 to 200 mm/s	
Piston rod diameter		ø6	ø8	ø10	ø12
Rod end thread	**Female thread**	M3 x 0.5	M4 x 0.7	M5 x 0.8	M6 x 1.0
	Male thread	M5 x 0.8	M6 x 1.0	M8 x 1.25	M10 x 1.25
Rod end thread tolerance		JIS Class 2			
Stroke tolerance		$^{+1.0}_{0}$ mm			
Port size		M5 x 0.8			
Vacuum suction port		M5 x 0.8			
Grease		Fluorine grease			
Particle generation grade		Grade 1			
Suction flow rate (Reference values)		5 ℓ/min(ANR)			

External dimensions and applicable auto switches are the same as 10-/11- CQS. Please refer to pages 56 to 63.

Actuator / Common Precautions 1

Be sure to read before handling. Refer to the main text for precautions for each series.

Precaution on designing

⚠ Warning

1. There is a possibility of dangerous sudden action by air cylinders if sliding parts of machinery are twisted due to external forces, etc.
In such cases, personal injury by catching hands or feet in the machinery, or damage to the machinery itself may occur. Therefore, the machine should be adjusted to operate smoothly and designed to avoid such dangers.

2. A protective cover is recommended to minimize the risk of personal injury.
If a driven object and moving parts of a cylinder are in close proximity, personal injury may occur. Design the structure to avoid contact with the human body.

3. Securely tighten all stationary parts and connected parts so that they will not become loose.
Particularly when a cylinder operates at a high frequency or is installed in a place where there is a lot of vibration, ensure that all parts remain secure.

4. A deceleration circuit may be required.
When a driven object is operated at high speed or the load is heavy, a cylinder's cushion will not be sufficient to absorb the impact. Install a deceleration circuit to reduce the speed before cushioning to relieve the impact.
In this case, the rigidity of the machinery should also be examined.

5. Consider a possible drop in circuit pressure due to a power outage, etc.
When a cylinder is used in a clamping mechanism, there is a danger of workpiece dropping if there is a decrease in clamping force due to a drop in circuit pressure caused by a power outage, etc. Therefore, safety equipment should be installed to prevent damage to machinery and personal injury. Suspension mechanisms and lifting devices also require consideration for drop prevention.

6. Consider a possible loss of power source.
Measures should be taken to avoid personal injury and equipment damage in the event that there is a loss of power to equipment controlled by pneumatics, electricity, or hydraulics.

7. Design circuitry to prevent the sudden lurching of driven objects.
When a cylinder is driven by an exhaust center type directional control valve or when it is started up after residual pressure is exhausted from the circuit, etc., the piston and its driven object will lurch when the cylinder is operated at high speed if pressure is applied to one side of the cylinder, due to the absence of air pressure inside the cylinder. Therefore, equipment should be selected and circuits should be designed to prevent this sudden lurching, because there is a danger of personal injury and/or damage to equipment when this occurs.

8. Consider emergency stops.
Design the machinery so that personal injury and/or damage to machinery and equipment will not occur when the machinery is stopped by a safety device under abnormal conditions, such as a power outage or a manual emergency stop.

9. Consider the action when operation is restarted after an emergency stop or abnormal stop.
Design the machinery so that personal injury or equipment damage will not occur upon restart of operation.
When the cylinder has to be reset at the start position, install safety manual control equipment.

Selection

⚠ Warning

1. Confirm the specifications.
The products featured in this catalog are designed for use in industrial compressed air systems. If the products are used in conditions where pressure and/or temperature are outside the range of specifications, damage and/or malfunctions may occur. Do not use in these conditions. (Refer to the specifications).
Please consult with SMC if you use a fluid other than compressed air.

2. Intermediate Stops
With a 3-position closed center type valve, it is difficult to accurately and precisely stop a piston at the required position in the same way as can be done with hydraulic pressure due to the compressibility of air.
Furthermore, since valves and cylinders, etc. are not guaranteed for zero air leakage, it may not be possible to hold a stopped position for an extended period of time. Please contact with SMC when it is necessary to hold a stopped position for an extended period of time.

⚠ Caution

1. Operate within the limits of the maximum feasible stroke.
Operation that exceeds the maximum stroke may damage a piston rod. Refer to the air cylinder model selection procedures for the maximum feasible strokes.

2. Operate a cylinder within a range such that collision damage will not occur to a piston at the stroke end.
Operate a cylinder within a range so that a piston having inertial force will not be damaged when it collides against the cover at the stroke end. Refer to the air cylinder model selection procedures for the maximum feasible strokes.

3. Use a speed controller to adjust the cylinder speed, gradually increasing from a low speed to the desired speed setting.

4. Provide intermediate supports for long stroke cylinders.
An intermediate support should be provided in order to prevent damage to a long stroke cylinder, due to problems such as sagging of the rod, deflection of the cylinder tube, vibration and external load.

Actuator / Common Precautions 2

Be sure to read before handling. Refer to the main text for precautions for each series.

Mounting

⚠ Caution

1. Be certain to match the rod shaft center with the load and direction of movement when connecting.
When not properly matched, problems may arise with the rod and tube, and damage may be caused due to friction on areas such as the inner tube surface, bushings, rod surface, and seals.

2. When using an external guide, connect the rod end and the load in such a way that there is no interference at any point within the stroke.

3. Do not scratch or gouge the sliding portion of the cylinder tube or the piston rod by striking it with an object, or squeezing it.
The tube bore is manufactured under precise tolerances. Thus, even a slight deformation could lead to a malfunction.
Moreover, scratches or gouges, etc. in the piston rod may lead to damaged seals and cause air leakage.

4. Do not use until you verify that the equipment can operate properly.
After mounting, repairs, or modification, etc., connect the air supply and electric power, and then confirm proper mounting by means of appropriate function and leak tests.

5. Instruction manual
Install the products and operate them only after reading the instruction manual carefully and understanding its contents.
Also keep the manual where it can be referred to as necessary.

Cushion

⚠ Caution

1. Readjust with a cushion needle.
Cushions are adjusted at the time of shipment; however, the cushion needle on the cover should be readjusted, when the product is put into service based on factors such as the size of the load and the operating speed. When the cushion needle is turned clockwise, the restriction becomes smaller and the cushion's effectiveness is increased. Tighten the lock nut securely after adjustment is performed.

2. Do not operate the actuator with the cushion needle fully closed.
This could damage the seals.

Air Supply

⚠ Warning

1. Use clean air.
Do not use compressed air which contains chemicals, synthetic oil containing organic solvents, salts or corrosive gases, etc. as this may cause damage or malfunction.

⚠ Caution

1. Install air filters.
Install air filters close to valves at their upstream side. A filtration degree of 5μm or less should be selected.

2. Install an aftercooler, air dryer, or water separator (Drain Catch).
Compressed air that includes excessive drainage may cause malfunction of valves and other pneumatic equipment. To prevent this, install an air dryer, aftercooler or water separator (drain catch), etc.

3. Use the product within the specified range of fluid and ambient temperature.
Take measures to prevent freezing at temperature below 5°C, since moisture in circuits may freeze and cause damage to seals and lead to malfunctions.

Actuator / Common Precautions 3

Be sure to read before handling. Refer to the main text for precautions for each series.

Operating Environment

⚠ Warning

1. **Do not use in atmospheres or locations where corrosion hazards exist.**
   Refer to the construction drawings regarding cylinder materials.
2. **In locations where ultrapure water or cleaning solvent, etc. splashes on the equipment, take suitable measures to protect the rod.**

Maintenance

⚠ Warning

1. **Perform maintenance procedures as shown in the instruction manual.**
   Improper handling may result in malfunction and damage of machinery or equipment.
2. **Removal of equipment, and supply / exhaust of compressed air**
   Before any machinery or equipment is removed, first ensure that the appropriate measures are in place to prevent the fall or erratic movement of driven objects and equipment, then cut off the electric power and release the compressed air in the system.
   When machinery is restarted, proceed with caution after confirming that appropriate measures are in place to prevent cylinders from sudden movement.

⚠ Caution

1. **Drain flushing**
   Remove drainage from air filters regularly.

Auto switch / Common Precautions 1

Be sure to read before handling. Refer to the main text for precautions for each series.

Design/Selection

⚠ Warning

1. Confirm the specifications.

Read the specifications carefully and use this product appropriately. The product may be damaged or malfunction if it is used outside the specifications of current voltage, temperature or impact.

2. Use caution when multiple cylinders are used in close proximity to each other.

When two or more auto switch cylinders are lined up in close proximity to each other, magnetic field interference may cause the switches to malfunction. Maintain a minimum cylinder separation of 40mm. (When the allowable interval is specified for each cylinder series, use the indicated value.)

3. Use caution to the ON time of a switch at the intermediate position of stroke.

When an auto switch is placed at an intermediate position of the stroke and a load is driven at the time the piston passes, the auto switch will operate, but if the speed is too fast, the operating time will be shortened and the load may not operate properly. The maximum detectable piston speed is :

$$V\ (mm/s) = \frac{\text{Auto switch operation range (mm)}}{\text{Load operating time (ms)}} \times 1000$$

In cases of high piston speed, the use of an auto switch (D-F5NT, F7NT, G5NT and M5□T) with a built-in OFF delay timer (approx. 200ms) makes it possible to extend the load operating time.

4. Wiring should be kept as short as possible.

<Reed switch>

As the length of the wiring to a load gets longer, the rush current at switching ON becomes greater, and this may shorten the product's life. (The switch will stay ON all the time).

1) For an auto switch without a contact protection circuit, use a contact protection box when the wire length is 5m or longer.
2) Even if an auto switch has a built-in contact protection circuit, when the wiring is more than 30m long, it is not able to adequately absorb the rush current and its life may be reduced. It is again necessary to connect a contact protection box in order to extend its life. Please contact SMC in this case.

<Solid state switch>

3) Although wire length should not affect switch function, use a wire 100m or shorter.

5. Use caution to internal voltage drop of a switch.

<Reed switch>

1. Switches with an indicator light (except D-A56/A76H/ A96/A96V/C76/E76A/Z76)

- If auto switches are connected in series as shown below, please note that there will be a large voltage drop because of internal resistance in the light emitting diodes. (Refer to internal voltage drop in the auto switch specifications.)
- [The voltage drop will be "n" times larger when "n" auto switches are connected.]

The load may be ineffective even though the auto switch function is normal.

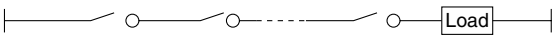

- Similarly, when operating below a specified voltage, it is possible that the load may be ineffective even though the auto switch function is normal. Therefore, the formula below should be satisfied after confirming the minimum operating voltage of the load.

Power voltage – Internal voltage drop of switch > Minimum operating voltage of load

2) If the internal resistance of a light emitting diode causes a problem, select a switch without an indicator light (D-A6□, A80, A80H, A90, A90V, C80, R80, 90, E80A, Z80).

<Solid state switch>

3) Generally, the internal voltage drop will be greater with a 2-wire solid state auto switch than with a reed switch. Take the same precautions as in 1).

Also please note that a 12VDC relay is not applicable.

6. Use caution to the leakage current.

<Solid state switch>

With a 2-wire solid state auto switch, current (leakage current) flows to the load to operate the internal circuit even when in the OFF state.

Current to operate load (OFF condition) > Leakage current

If the condition given in the above formula is not met, it will not reset correctly (stays ON). Use a 3-wire switch if this specification cannot be satisfied.

Moreover, leakage current flow to the load will be "n" times larger when "n" auto switches are connected in parallel.

7. Do not use a load that generates surge voltage.

<Reed switch>

When driving a load such as a relay that generates a surge voltage, use a switch with a built-in contact protection circuit or a contact protection box.

<Solid state switch>

Although a zener diode for surge protection is connected to the output side of a solid state auto switch, damage may still occur if the surge is applied repeatedly. When a load, such as a relay or solenoid, which generates surge is directly driven, use a type of switch with a built-in surge absorbing element.

8. Cautions for use in an interlock circuit

When an auto switch is used for an interlock signal requiring high reliability, devise a double interlock system to avoid trouble by providing a mechanical protection function, or by also using another switch (sensor) together with the auto switch.

Also perform periodic maintenance inspections and confirm proper operation.

9. Ensure sufficient space for maintenance activities.

When designing an application, be sure to allow sufficient space for maintenance and inspection.

Auto switch / Common Precautions 2

Be sure to read before handling. Refer to the main text for precautions for each series.

Mounting/Adjustment

⚠ Warning

1. Do not drop or bump.
Do not drop, bump, or apply excessive impacts (300m/s^2 or more for reed switches and 1000m/s^2 or more for solid state switches) while handling. Although the body of the switch may not be damaged, the inside of the switch could be damaged and cause a malfunction.

2. Do not carry a cylinder by the auto switch lead wires.
Never carry a cylinder by its lead wires. This may not only cause broken lead wires, but it may cause internal elements of the switch to be damaged by the stress.

3. Mount switches using the proper tightening torque.
When a switch is tightened beyond the range of tightening torque, the mounting screws or switch may be damaged.
On the other hand, tightening below the range of tightening torque may allow the switch to slip out of position.

4. Mount a switch at the center of the operating range.
Adjust the mounting position of an auto switch so that the piston stops at the center of the operating range (the range in which a switch is ON). (The mounting positions shown in the catalog indicate the optimum position at the stroke end.) If mounted at the end of the operating range (around the borderline of ON and OFF), the operation will be unstable.

<D-M9□>
If this auto switch replaces the conventional model, it may not function depending on the application (shown below) because its operation range is shorter.

- **Applications where at the end, the stopping position shifting range is larger than the operation range**
  e.g. Workpiece pushing, pressing into a hole, or clamping
- **Applications where an auto switch is used to detect intermediate stopping positions (Detecting time is shortened).**

As indicated above, mount a switch at the center of the operating range.

Wiring

⚠ Warning

1. Avoid repeatedly bending or stretching lead wires.
Broken lead wires will result from repeatedly applying bending stress or stretching force to lead wires.

2. Be sure to connect the load before power is applied.
<2-wire type>
If the power is turned on when an auto switch is not connected to a load, the switch will be instantly damaged because of excess current.

3. Confirm proper insulation of wiring.
Be certain that there is no faulty wiring insulation (contact with other circuits, ground fault, improper insulation between terminals, etc.). Damage may occur due to excess current flow into a switch.

4. Do not wire with power lines or high voltage lines.
Wire separately from power lines or high voltage lines, avoiding parallel wiring or wiring in the same conduit with these lines. Control circuits, including auto switches, may malfunction due to

Wiring

⚠ Warning

5. Do not allow short circuiting of loads.
<Reed switch>
If the power is turned on with a load in a short circuited condition, the switch will be instantly damaged because of excess current flow into the switch.
<Solid state switch>
Models M-F9□(V), F9□W(V), J51, G5NB and all models of PNP output switches do not have built-in short circuit prevention circuits. If loads are short circuited, the switches will be instantly damaged.
Use caution to avoid reverse wiring with the brown power supply line and the black output line on 3 -wire type switches.

6. Avoid incorrect wiring.
<Reed switch>
A 24VDC switch with indicator light has polarity. The brown lead wire or terminal No.1 is (+), and the blue lead wire or terminal No.2 is (–).
[In the case of model D-97, the side without indicator is (+) and the blue line side is (–).]

1) If connections are reversed, a switch will operate, however, the light emitting diode will not light up.
Also please note that a current greater than the maximum specified one will damage a light emitting diode and make it inoperable.
Applicable models
D-A73, A73H, A73C, C73, C73C, E73A, Z73, R73
D-97, 93A, A93, A93V
D-A33, A34, A33A, A34A, A44, A44A
D-A53, A54, B53, B54

2) However, when using a 2 color indication auto switch (D-A79W, A59W, B59W), be aware that the switch will constantly remain ON if the connections are reversed.

<Solid state switch>

1) If connections are reversed on a 2-wire type switch, the switch will not be damaged if protected by a protection circuit, but the switch will always stay in an ON state. However, it is still necessary to avoid reversed connections, since the switch could be damaged by a load short circuit in this condition.

2) If connections are reversed (power supply line (+) and power supply line (–) on a 3-wire type switch, the switch will be protected by a protection circuit. However, if the power supply line (+) is connected to the blue wire and the power supply line (–) is connected to the black wire, the switch will be damaged.

<D-M9□>
D-M9□ does not have built-in short-circuit prevention circuits. Reverse connection of power supply line (+) and (–) may damage the switch.