No.PS※※-OMG0002-G

Operation Manual

PRODUCT NAME

Pressure Sensor Controller

MODEL / Series / Product Number

PSE300

SMC Corporation

Table of Contents

Safety Instructions 2
Model Indication and How to Order 8
Summary of Product parts 9
Mounting and Installation 10
Installation 10
Wiring 12
Internal circuit and wiring example 14
Setting 16
Pressure Setting 19
Other Functions 21
Maintenance 23
Troubleshooting 24
Specification 31
Specifications 31
Dimensions 33



Safety Instructions

These safety instructions are intended to prevent hazardous situations and/or equipment damage. These instructions indicate the level of potential hazard with the labels of "Caution", "Warning" or "Danger".

They are all important notes for safety and must be followed in addition to International Standards (ISO/IEC)*1), and other safety regulations.

*1) ISO 4414: Pneumatic fluid power -- General rules relating to systems.
ISO 4413: Hydraulic fluid power -- General rules relating to systems.
IEC 60204-1: Safety of machinery -- Electrical equipment of machines. (Part 1: General requirements)
ISO 10218: Manipulating industrial robots -Safety.
etc.

⚠ **Caution**	**Caution** indicates a hazard with a low level of risk which, if not avoided, could result in minor or moderate injury.
⚠ **Warning**	**Warning** indicates a hazard with a medium level of risk which, if not avoided, could result in death or serious injury.
⚠ **Danger**	**Danger** indicates a hazard with a high level of risk which, if not avoided, will result in death or serious injury.

⚠ Warning

1. The compatibility of the product is the responsibility of the person who designs the equipment or decides its specifications.

Since the product specified here is used under various operating conditions, its compatibility with specific equipment must be decided by the person who designs the equipment or decides its specifications based on necessary analysis and test results.

The expected performance and safety assurance of the equipment will be the responsibility of the person who has determined its compatibility with the product.

This person should also continuously review all specifications of the product referring to its latest catalog information, with a view to giving due consideration to any possibility of equipment failure when configuring the equipment.

2. Only personnel with appropriate training should operate machinery and equipment.

The product specified here may become unsafe if handled incorrectly.

The assembly, operation and maintenance of machines or equipment including our products must be performed by an operator who is appropriately trained and experienced.

3. Do not service or attempt to remove product and machinery/equipment until safety is confirmed.

1. The inspection and maintenance of machinery/equipment should only be performed after measures to prevent falling or runaway of the driven objects have been confirmed.
2. When the product is to be removed, confirm that the safety measures as mentioned above are implemented and the power from any appropriate source is cut, and read and understand the specific product precautions of all relevant products carefully.
3. Before machinery/equipment is restarted, take measures to prevent unexpected operation and malfunction.

4. Contact SMC beforehand and take special consideration of safety measures if the product is to be used in any of the following conditions.

1. Conditions and environments outside of the given specifications, or use outdoors or in a place exposed to direct sunlight.
2. Installation on equipment in conjunction with atomic energy, railways, air navigation, space, shipping, vehicles, military, medical treatment, combustion and recreation, or equipment in contact with food and beverages, emergency stop circuits, clutch and brake circuits in press applications, safety equipment or other applications unsuitable for the standard specifications described in the product catalog.
3. An application which could have negative effects on people, property, or animals requiring special safety analysis.
4. Use in an interlock circuit, which requires the provision of double interlock for possible failure by using a mechanical protective function, and periodical checks to confirm proper operation.



Safety Instructions

⚠Caution

1.The product is provided for use in manufacturing industries.
The product herein described is basically provided for peaceful use in manufacturing industries.
If considering using the product in other industries, consult SMC beforehand and exchange specifications or a contract if necessary.
If anything is unclear, contact your nearest sales branch.

Limited warranty and Disclaimer/Compliance Requirements

The product used is subject to the following "Limited warranty and Disclaimer" and "Compliance Requirements".
Read and accept them before using the product.

Limited warranty and Disclaimer

1. The warranty period of the product is 1 year in service or 1.5 years after the product is delivered, whichever is first.∗2)
Also, the product may have specified durability, running distance or replacement parts. Please consult your nearest sales branch.
2. For any failure or damage reported within the warranty period which is clearly our responsibility, a replacement product or necessary parts will be provided.
This limited warranty applies only to our product independently, and not to any other damage incurred due to the failure of the product.
3. Prior to using SMC products, please read and understand the warranty terms and disclaimers noted in the specified catalog for the particular products.

∗2) Vacuum pads are excluded from this 1 year warranty.
A vacuum pad is a consumable part, so it is warranted for a year after it is delivered. Also, even within the warranty period, the wear of a product due to the use of the vacuum pad or failure due to the deterioration of rubber material are not covered by the limited warranty.

Compliance Requirements

1. The use of SMC products with production equipment for the manufacture of weapons of mass destruction (WMD) or any other weapon is strictly prohibited.
2. The exports of SMC products or technology from one country to another are governed by the relevant security laws and regulation of the countries involved in the transaction. Prior to the shipment of a SMC product to another country, assure that all local rules governing that export are known and followed.

⚠Caution

SMC products are not intended for use as instruments for legal metrology.
Products that SMC manufactures or sells are not measurement instruments that are qualified by pattern approval tests relating to the measurement laws of each country.
Therefore, SMC products cannot be used for business or certification ordained by the measurement laws of each country.

Operator

- ♦This operation manual is intended for those who have knowledge of machinery using pneumatic equipment, and have sufficient knowledge of assembly, operation and maintenance of such equipment. Only those persons are allowed to perform assembly, operation and maintenance.
- ♦Read and understand this operation manual carefully before assembling, operating or providing maintenance to the product.

■Safety Instructions

⚠Warning

■Do not disassemble, modify (including changing the printed circuit board) or repair.
An injury or failure can result.

■Do not operate the product outside of the specifications.
Do not use for flammable or harmful fluids.
Fire, malfunction, or damage to the product can result.
Verify the specifications before use.

■Do not operate in an atmosphere containing flammable or explosive gases.
Fire or an explosion can result.
This product is not designed to be explosion proof.

■Do not use the product in a place where static electricity is a problem.
Otherwise it can cause failure or malfunction of the system.

■If using the product in an interlocking circuit:
- •Provide a double interlocking system, for example a mechanical system
- •Check the product regularly for proper operation

Otherwise malfunction can result, causing an accident.

■The following instructions must be followed during maintenance:
- •Turn off the power supply
- •Stop the air supply, exhaust the residual pressure and verify that the air is released before performing maintenance

Otherwise an injury can result.

⚠Caution

■Do not touch the terminals and connectors while the power is on.
Otherwise electric shock, malfunction or damage to the product can result.

■After maintenance is complete, perform appropriate functional inspections and leak tests.
Stop operation if the equipment does not function properly or there is a leakage of fluid.
When leakage occurred from other parts except piping, the product might break.
Cut off power supply and stop supplying fluid.
Do not apply fluid at leaking condition.
Safety cannot be assured in the case of unexpected malfunction.

■NOTE

○Follow the instructions given below when designing, selecting and handling the product.

●The instructions on design and selection (installation, wiring, environment, adjustment, operation, maintenance, etc.) described below must also be followed.

∗Product specifications

- Operate the product with the specified voltage.
  Operation with a voltage beyond specifications can cause malfunction or damage of the product.
  Insufficient supply voltage may not drive a load due to a voltage drop inside the product.
  Verify the operating voltage of the load before use.
- Use the pressure sensor within the specified ranges of the measurement flow rate and under the specified operating pressure.
  Otherwise it can cause damage to the product and an abnormal measurement.
- Do not exceed the specified maximum allowable load.
  Otherwise it can cause damage or shorten the lifetime of the product.
- Reserve a space for maintenance.
  Remember to leave space for maintenance when designing the piping plan.
- The direct-current power supply to combine should use UL authorization power supply which is the Class 2 power supply based on UL1310 or the power supply is using the transformer of a Class 2 based on UL1585.
- The product is a UL approved product only if it has a cULus mark on the body.

●Product handling

∗Installation

- Do no drop, hit or apply shock to the product.
  Otherwise it can result in damage to the product causing failure or malfunction.
- Do not pull cables or lift the body with cables.
  Hold the body when handing.
  Otherwise it can result in damage of the product causing failure or malfunction.
- Follow the specified tightening torque.
  Excessive tightening torque can break the product, bracket, and mounting screws. Insufficient tightening torque can displace the product from the original position or loosen the mounting screws.
- Do not apply excessive external force with joints such as hoses when installing with a panel mount adapter.
  Otherwise it can damage the pipe joint of the product or cause drop off from the panel mount adapter.
- Connect frame-ground terminal (FG terminal) to the ground when using a switching power supply.
- Insert a noise filter (power line noise filter, ferrite core, etc.) between the switching power supply and product when using analogue output.

∗Wiring

- Do not bend or apply tensile stress to cables repeatedly.
  Wiring with repetitive bending stress or tensile stress can cause breakage of the cables.
  Replace the product when damage to a cable is observed.
  The recommended bend radius of the cable is 6 times the outside diameter of the sheath, or 33 times the outside diameter of the insulation material, whichever is larger.
- Connect wires and cables correctly.
  Miswiring can break the product depending on a miswired circuit.
- Do not attempt to insert or pull out the pressure sensor or its connector when the power is on. Switch output may malfunction.
- Do not connect wires while the power is on.
  Otherwise it can break the circuit inside the product causing malfunction.
- Do not lay wires or cables with power cable or high-voltage cable in the same wiring route.
  Otherwise the wires to the product can be contaminated with noise or induced surge voltage from power lines or high voltage lines causing malfunction. Lay the wires to the product to a wire duct or in a protective tube other than those for power lines or high voltage lines.
- Verify the insulation of wiring.
  Poor insulation (interference with other circuit, poor insulation between terminals and etc.) can introduce excess voltage or current to the product causing damage.
- Keep wiring as short as possible to prevent contamination from noise and induced surge voltage.
  Do not use a cable longer than 30 m. Consult with SMC for the use with a cable longer than 30 m.
  Connect the 0 VDC wire (blue line) directly or as close as possible to the 0 VDC terminal of the DC power supply.

∗Environment

- Do not use the product in an atmosphere containing corrosive gas, chemicals, seawater, water or vapor, or in a place where there is a possibility of adhesion of those substances to the product.
  It can cause failure or malfunction.
- Avoid exposure of this product to direct sunlight.
  Use sunshades if the product is exposed to direct sunlight.
  Otherwise it can cause failure or malfunction.
- Do not use in a place where water, oil or chemicals splashes.
  Otherwise it can cause failure or malfunction.
- Do not use a product nearby a place where electric surges are generated.
  Internal circuit elements of the product can deteriorate or break when equipment generating a large surge (electromagnetic lifter, high frequency induction furnace, motor, etc.) is located near the product. Provide surge preventives, and avoid interference.
- Do not apply the product to the load that generates electric surge voltage.
  Relays or solenoid values generate electric surge voltage. When applying the product to drive these loads directly, use the product equipped with surge absorber.
- The product is not resistive to a lightning surge defined in CE marking. Take measures to protect against a lightning surge at the load side.
- Prevent foreign matter such as remnant of wires from entering this product.
  Take proper measures for the remnant not to enter the product in order to prevent failure or malfunction.
- Mount the product in a place that is not exposed to vibration or impact.
  Otherwise it can cause damage or malfunction.
- Follow the specified ranges of the operating fluid and maintain ambient temperatures.
  The operating fluid and ambient temperatures should be in the range of 0 to 50 °C.
  When operating at low temperature of 5 °C or below, breakage or malfunction can occur to the product due to freezing of condensed water in the pressurized air.
  Take preventive measures against freezing. Do not use the product in a place where temperature suddenly changes even if it stays within the specified range.
- Do not expose the product to heat radiation from a heat source located nearby.
  It can cause malfunction.

∗Adjustment and Operation

- Do not short-circuit the load.
- Do not press the buttons with a sharp object.
  It can cause damage to the setting buttons.
- A warm-up time of 20 to 30 minutes is needed for detection of low pressure.
  The indication drifts about ±1% soon after the power is on.
- Do not touch the LCD during operation.
  The indication on the LCD changes due to static electricity.

∗Maintenance

- Before performing maintenance, make sure to turn off the power supply.
  Otherwise an unexpected operation of the system component can occur.
- Perform maintenance and check regularly.
  Otherwise an unexpected malfunction of the system can occur due to a malfunction of the product.
- Perform a proper functional check after maintenance.
  Stop operation when an abnormality is observed such that the device does not work properly.
  Otherwise an unexpected malfunction of the system component can occur.
- Do not use solvents such as benzene or thinner to clean the product body.
  It can damage the surface of the body and erase the indication on the body.
  Use a soft cloth to remove stains. For heavy stains, use a cloth soaked with diluted neutral detergent and fully squeezed, then wipe up the stains again with a dry cloth.

Model Indication and How to Order

DIN rail and terminal base type: PSE3□□T – □□

Connector mounting type: PSE3□□ – □□□□

Option

Nil	No option
E	Front protective cover

Option 3

Nil	No option
C	Connector for sensor cable

Input specification

0	Voltage input
1	Current input

Option 2

Nil	No option
A	Bracket
B	Panel mount adapter
D	Panel mount adapter + Front protective cover

Option 1

Nil	No option
L	Power and output cable

Unit specification

Nil	Unit selection function provided *1
M	SI units fixed *2

Input/output specification

0	NPN open collector 2 outputs + 1 to 5 VDC Analogue output
1	NPN open collector 2 outputs + 4 to 20 mA Analogue output
2	NPN open collector 2 outputs + Auto-shift input
3	PNP open collector 2 outputs + 1 to 5 VDC Analogue output
4	PNP open collector 2 outputs + 4 to 20 mA Analogue output
5	PNP open collector 2 outputs + Auto-shift input

∗: A unit label is attached.

∗1: The new Measurement Law prohibits use in Japan of products with a unit selection function.

∗2: Fixed unit for compound, vacuum, low and differential pressure is: kPa
for positive pressure is: MPa (kPa for 500 kPa range model)

○Options

Option products	Model	Note
Power and output cable	ZS-28-A	Length 2 m
Bracket	ZS-28-B	With set screws M3 x 5 L (2 pcs.)
Connector for sensor cable	ZS-28-C	1 pc.
Panel mount adapter	ZS-27-C	With set screws M3 x 8 L (2 pcs.)
Panel mount adapter + Front protective cover	ZS-27-D	With set screws M3 x 8 L (2 pcs.)
Front protective cover	ZS-27-01	1 pc.

Summary of Product parts

○Names of individual parts

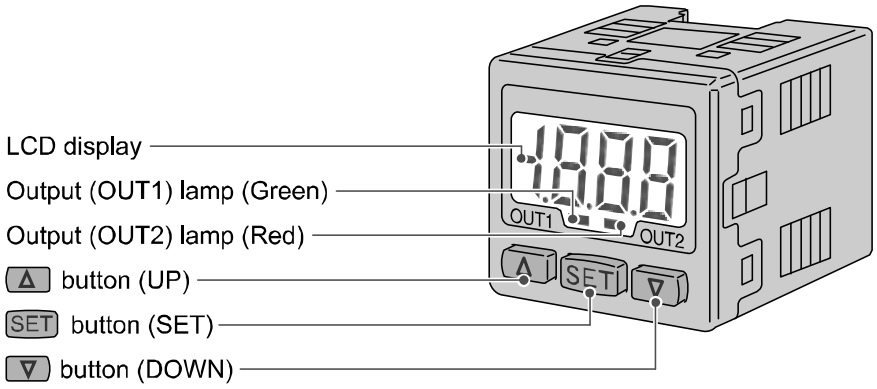

Output (OUT1) lamp (Green): Lit when OUT1 is ON.

Output (OUT2) lamp (Red): Lit when OUT2 is ON.

LCD display: Displays the current status of pressure, setting mode, selected indication unit and error code. Four display modes can be selected: display always in red or green only, or changing from green to red linked to output.

△ button (UP): Selects a mode and increases a set ON/OFF value.
Press this button to change to the peak display mode.

▽ button (DOWN): Selects a mode and decreases a set ON/OFF value.
Press this button to change to the bottom display mode.

SET button (SET): Changes the mode and sets a set value.

Mounting and Installation

■Installation

<PSE3□□>

○Mounting

●Mount the optional bracket and panel mount adapter to the product.

○Mounting by bracket

●Fix the bracket to the product with the set screws M3 x 5 L (2 pcs.) as attached.

●The tightening torque of the set screws must be 0.5 to 0.7 Nm.

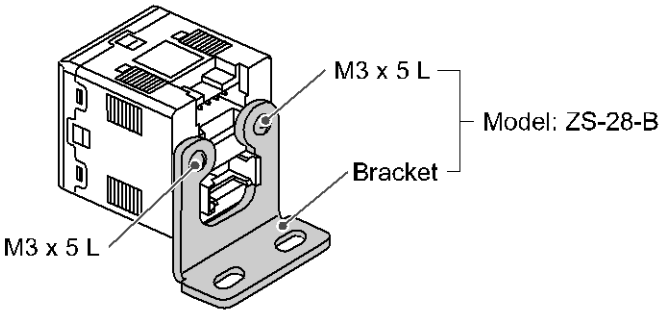

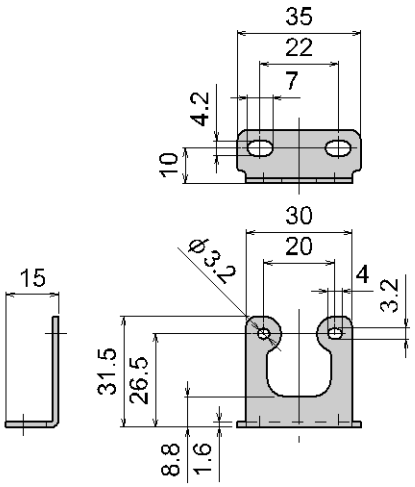

○Mounting by panel mount adapter

●Fix the panel mount adapter to the product with the set screws M3 x 8 L (2 pcs.) as attached.

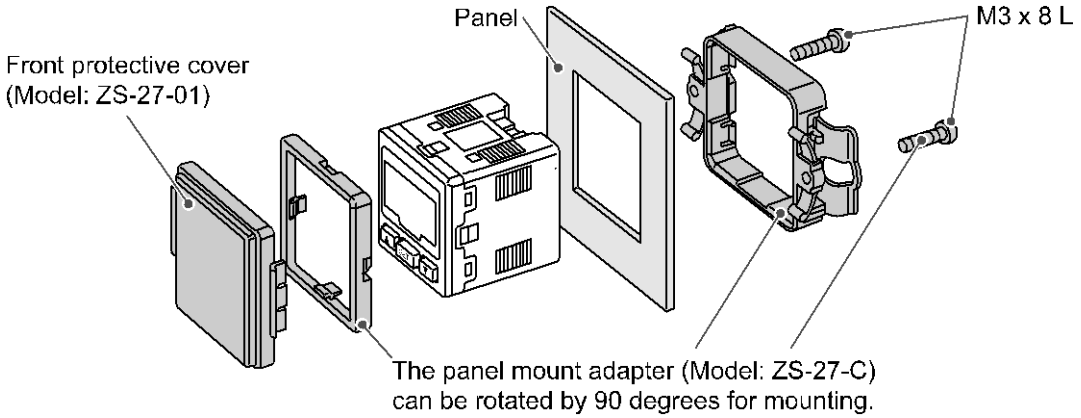

○Notice when removing the controller

●The controller with adapter for panel mounting can be removed from facility by making hook of the controller wide as illustration after removing two screws. Pressure sensor controller and panel mount adapter may be damaged.

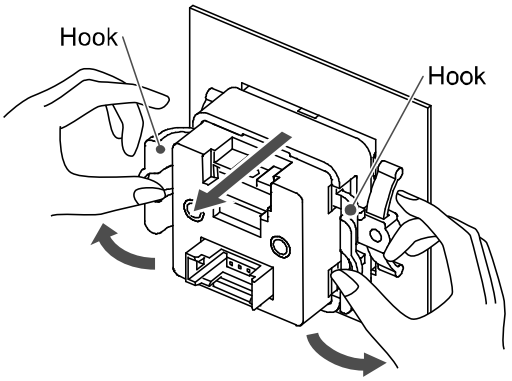

<PSE3□□T>

●Mounting

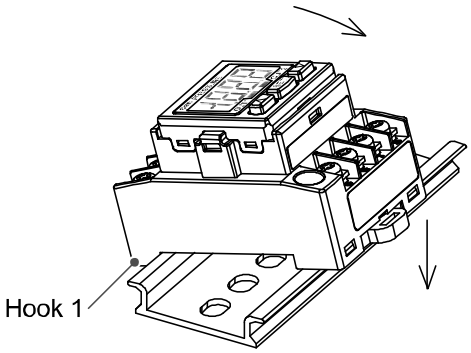

Fig. a

•Hang the Hook 1 at the bottom of the body on the DIN rail as shown in Fig. a, press it in arrowed direction to fix.

●Removing

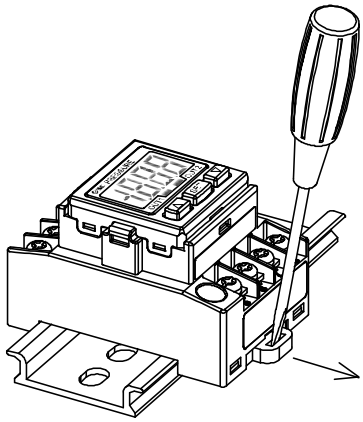

Fig. b

•For removal, pull it with a flat driver in arrowed direction shown in Fig. b.

■Wiring

○Connection

●Connections should only be made with the power supply turned off.

●Use separate routes for the product wiring and any power or high voltage wiring. Otherwise, malfunction may result due to noise.

●Ensure that the FG terminal is connected to ground when using a commercially available switch-mode power supply. When a switch-mode power supply is connected to the product, switching noise will be superimposed and the product specification can no longer be met. This can be prevented by inserting a noise filter, such as a line noise filter and ferrite core, between the switch-mode power supply and the product, or by using a series power supply instead of a switch-mode power supply.

<PSE3□□>

○Attaching the connector to the cable

●Sensor wire is stripped as shown in the right figure. (Refer to the table below for correspondence between connector and electrical wire gauge.)

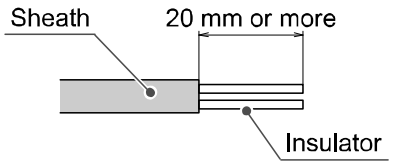

Cable table

AWG No.	Conductor size (mm^2)	Overall diameter (mm)	Colour of cover	SMC product No.
24-26	0.14-0.2	ϕ0.8t to ϕ1.0	Red	ZS–28–C
		ϕ1.0 to ϕ1.2	Yellow	ZS–28–C–1
		ϕ1.2 to ϕ1.6	Orange	ZS–28–C–2
23	0.1-0.5	ϕ1.15 to ϕ1.35	Blue	ZS-28-CA-4
20-22	0.3-0.5	ϕ1.0 to ϕ1.2	Green	ZS–28– C–3
		ϕ1.2 to ϕ1.6	Blue	ZS–28–C–4
		ϕ1.6 to ϕ2.0	Gray	ZS–28–C–5

The correspondence table of each maker and SMC product number

SMC product No.	Sumitomo 3M Ltd. product No.	Tyco Electronics AMP K.K. product No.
ZS–28–C	37104–3101–000FL	1–1473562–4
ZS–28–C–1	37104–3122–000FL	—
ZS–28–C–2	37104–3163–000FL	
ZS–28–CA–4	—	2–1473562–4
ZS–28–C–3	37104–2124–000FL	
ZS–28–C–4	37104–2165–000FL	
ZS–28–C–5	37104–2206–000FL	—

∗: The cable that is suitable with conductor composition may be different. Please contact with an electric wire manufacture for details.

●The core of the corresponding colour shown in the following table is put into the pin of the number stamped on the connector for sensor connection to the back.

Number stamped on connector	Colour of cable core		
	PSE30□ (Voltage input)	PSE31□ (Current input)	
		Pressure sensor 2-wire type	Pressure sensor 3-wire type
1	Brown (DC(+))	Brown (LINE(+))	Brown (DC(+))
2	N.C.	N.C.	N.C.
3	Blue (DC(–))	N.C.	Blue (DC(–))
4	Black (OUT: 1 to 5 V)	Blue (LINE(–))	Black (OUT: 4 to 20 mA)

●It checks that the above-mentioned preparation work has been performed correctly, and A part shown in right figure is pushed by hand and makes temporary connection.

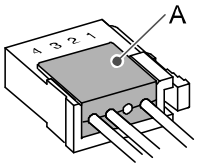

●A part center is straightly pushed in by tools, such as pliers.

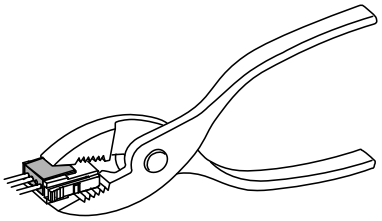

●Re-use cannot be performed once it connects the connector for sensor connection completely. When you fail in the connection mistake of a core and a pin, or the plug of wire, please use the new connector for sensor connection.

○Connector

Connecting/Disconnecting

●When connecting the connector, insert it straight onto the pin holding the lever and connector body between fingers and lock the connector by pushing the lever claw into the square groove in the housing until connector clicks.

●When disconnecting the connector, push down the lever by thumb to disengage the lever claw from the square groove. Then pull the connector straight out.

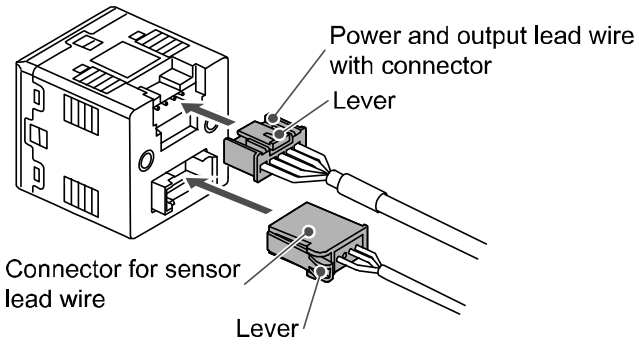

Pin No. of the connector for power and output cable

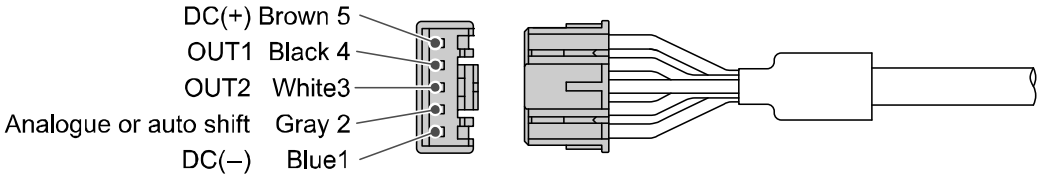

<PSE3□□T>

○Applicable crimping terminal dimensions

●The terminal screw is M3.

●If using the crimping terminal, follow the specifications below.

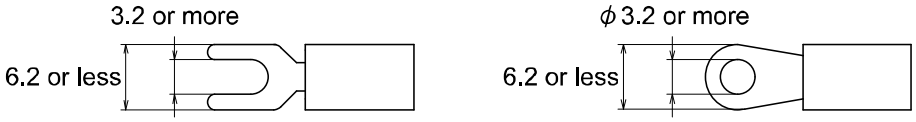

(Unit: mm)

●Tighten the terminal screw at a torque of 0.3 to 0.35 Nm.

■Internal circuit and wiring example

○Wiring example

PSE3□□T
(Voltage input, Current input: Pressure sensor 3-wire type)

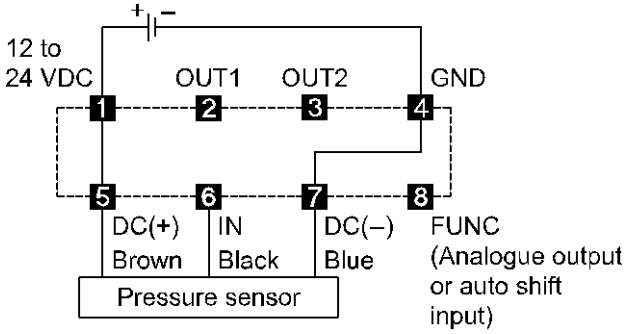

PSE31□T
(Current input: Pressure sensor 2-wire type)

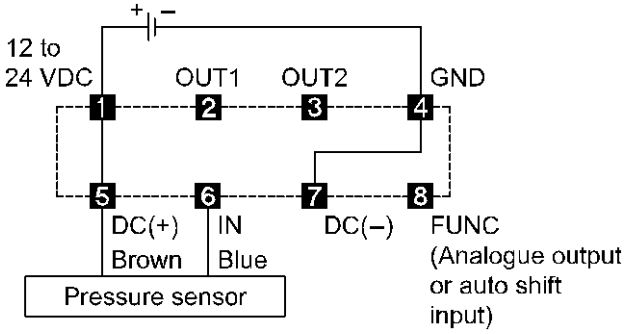

○Output specification

●When the cable with SMC power and output cable (Model: ZS-28-A) is used, the colors of wire (Brown, Black, White, Gray, Blue) will apply as shown on circuit diagram.

PSE3□0(T)

NPN open collector output: 2 outputs
Max. 30 V, 80 mA
Residual voltage 1 V or less
Analogue output: 1 to 5 V
Output impedance: Approx. 1 kΩ

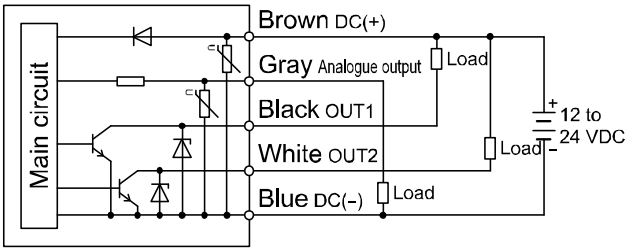

PSE3□1(T)

NPN open collector output: 2 outputs
Max. 30 V, 80 mA
Residual voltage 1 V or less
Analogue output: 4 to 20 mA
Max. load impedance: 300 Ω (12 VDC)
600 Ω (24 VDC)
Min. load impedance: 50 Ω

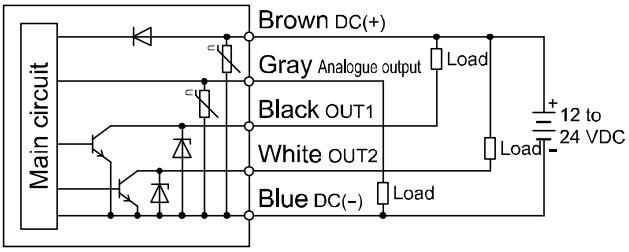

PSE3□2(T)

Auto shift input
Voltage free contact
NPN open collector output: 2 outputs
Max. 30 V, 80 mA
Residual voltage 1 V or less

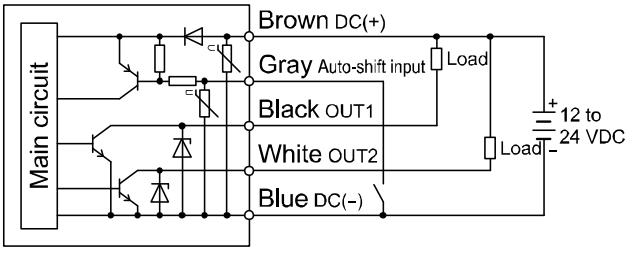

PSE3□3(T)

PNP open collector output: 2 outputs
Max. 80 mA
Residual voltage 1 V or less
Analogue output: 1 to 5 V
Output impedance: Approx. 1 kΩ

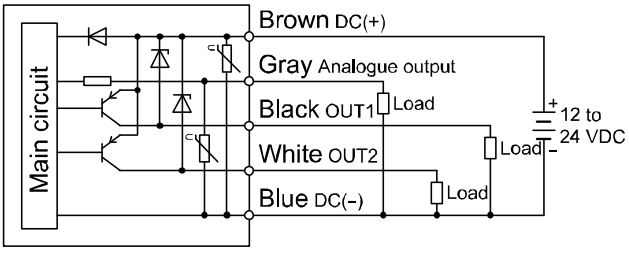

PSE3□4(T)

PNP open collector output: 2 outputs
Max. 80 mA
Residual voltage 1 V or less
Analogue output: 4 to 20 mA
Max. load impedance: 300 Ω (12 VDC)
600 Ω (24 VDC)
Min. load impedance: 50 Ω

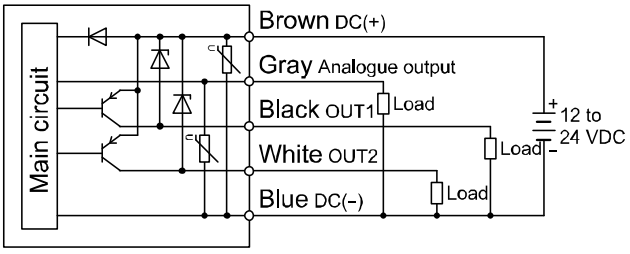

PSE3□5(T)

Auto shift input
Voltage free contact
PNP open collector output: 2 outputs
Max. 80 mA
Residual voltage 1 V or less

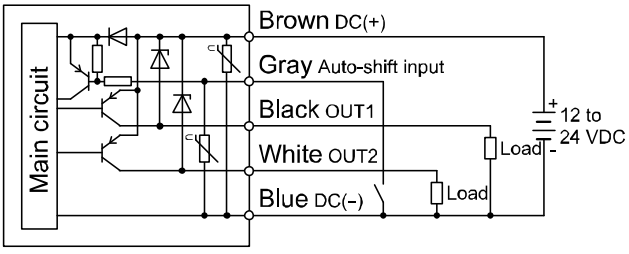

Setting

○Setting procedures

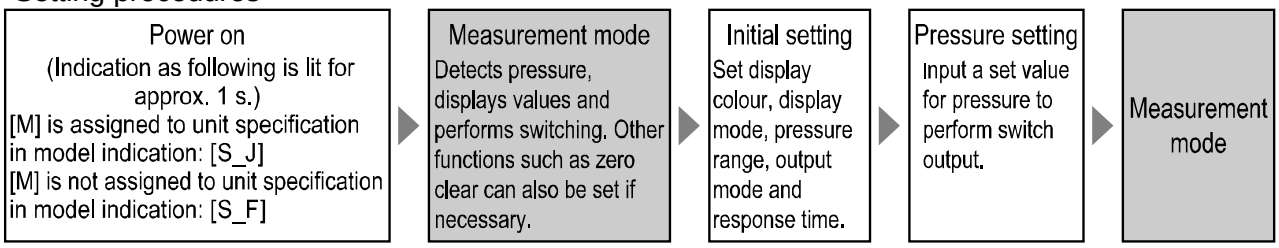

○Initial setting

Keep pressing the SET button longer than two seconds. Remove the finger off the SET button when [Sor] is displayed and initial setting can get started.

1. Display colour setting
   Select a colour for the LCD display.
   When changing the display colour, press the △ or ▽ button to select a display colour.
   Press the SET button to set the desired display colour.

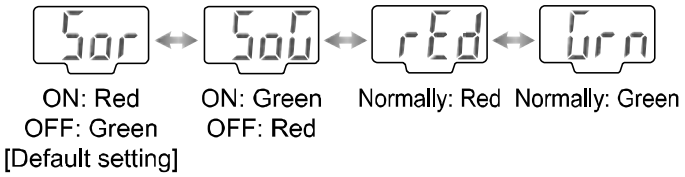

2. Output linked to display colour setting (For selection of Sor and SoG only)
   Select output linked to display colour, press the △ or ▽ button and select output. Press the SET button to set.

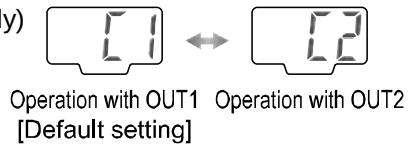

3. Pressure range setting
   Select the pressure range suitable for the sensor connected. Press the △ or ▽ button and select the pressure range. Press the SET button to set.
   (Refer to the following table for the labels printed the units stuck on the display part)

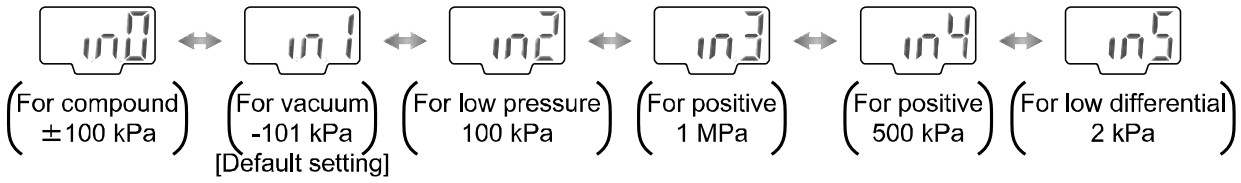

4. Selecting display unit (In case [M] is not assigned to unit specification in model indication)
   The indication unit can be selected freely. Pressing the △ or ▽ button will change the unit and will automatically convert set values. Press the SET button to set and to move to setting the output mode.

LCD display		PA	CF	bAr	PSI	inH	mmH
Unit	For compound and vacuum	kPa	kgf/cm^2	bar	psi	inHg	mmHg
	For low pressure	kPa	kgf/cm^2	bar	psi		
	For positive *1	MPa·kPa	kgf/cm^2	bar	psi		
	For low differential	kPa					mmH$_2$O

*1: MPa for 0 to 1 MPa range model, kPa for 0 to 500 kPa range model.

○Unit label

How to use the labels printed the units. In order to display the selected unit, the unit label according to the pressure range or the display unit is attached.

●In case [M] is assigned to unit specification in model indication.
Use the suitable label in the following labels by setup of the pressure range.

LCD display	in0	in1	in2	in3	in4	in5
Unit label	kPa			MPa	kPa	

5. Output method setting

- Four output mode can be selected by an operating mode and by output style. One of these four output mode can be selected for each output.
- OUT1 and OUT2 can be set independently.
- Refer to "List of output mode".

1) The operating mode for OUT1 is set.
   - Press the △ or ▽ button and select the hysteresis mode or the window comparator mode. Press the SET button to set.

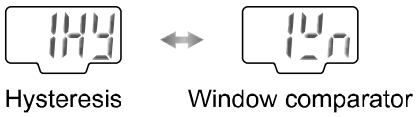

2) The output style for OUT1 is set.
   - Press the △ or ▽ button and select the normally open or the normally closed mode. Press the SET button to set.

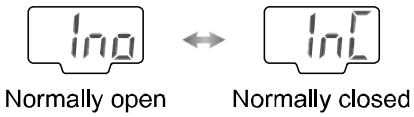

3) The operating mode and the output style for OUT2 is set.
   - Press the △ or ▽ button and the SET button to set, as in OUT1.

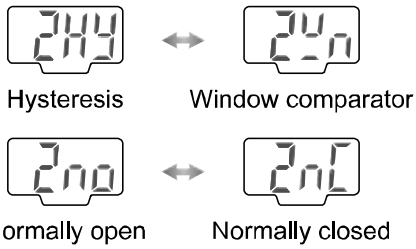

- List of output mode

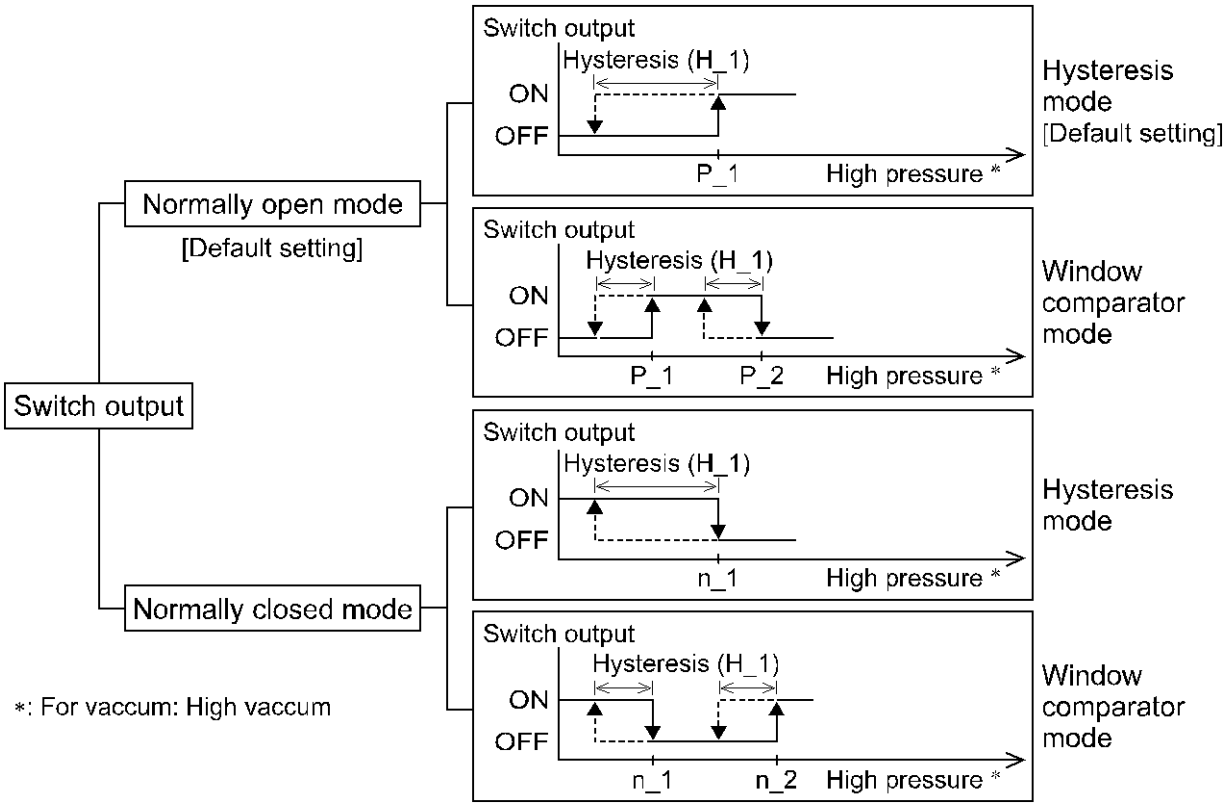

- Only hysteresis mode can be set at auto preset.
- The following is given using OUT1 as an example. The descriptions for OUT2 are the same as those for OUT1, under the conditions that [n_1] and [n_2] should be replaced by [n_3] and [n_4], [P_1] and [P_2] should be replaced by [P_3] and [P_4] and [H_1] should be replaced by [H_2].

6. Response time setting

- A response time for switch output can be set as user desires. Set the optimum response time to prevent the chattering of a switch.
- The response time currently set will be displayed. Select a desired response time by pressing the △ or ▽ button. Press the SET button to set.



1 ms [Default setting] | 20 ms | 160 ms | 640 ms | 1280 ms

7. Pressure setting

- There are two methods for pressure set-up: manual and auto preset, either one of which can be selected. The auto preset is provided for an automatic optimum set-up by using a sample for a case in which switch output is used to check absorption.
- An operation mode currently selected is displayed. Press the △ or ▽ button to select the set-up method to be used. Press the SET button to set.



Manual setting [Default setting] | Auto preset

- When both OUT1 and OUT2 are in window comparator mode, this item is not shown up.

8. Auto shift setting (PSE3□2(T)/3□5(T) models only)

1) Select the display mode of the pressure value at the time of auto shift operation.

- Either [AS (Auto shift)] or [ASO (Auto shift zero)] can be selected.

AS (Auto shift): [AS] displays the differential pressure of the atmosphere and measurement pressure.

ASO (Auto shift zero): [ASO] displays the differential pressure of the measurement pressure and the measurement pressure at the time of auto shift signal input.



Auto shift [Default setting] | Auto shift zero

- Press the △ or ▽ button to select the auto shift or auto shift zero. Press the SET button to set.

2) Selecting the switches which Auto Shift mode apply, when the auto shift signal is inputted.

- Press the △ or ▽ button to select the A1, A2 or Ab. Press the SET button to set.



OUT1 [Default setting] | OUT2 | Both OUT1 and OUT2

- The initialize setting will be completed and return to the Measurement mode.

Pressure Setting

○Manual setting

Manually set a set value of the product.

1. Selection of OUT1 [P_1] setting mode
   - Press the SET button during the Measurement mode to display set values.
   - [P_1] and the current set value will displays in turn. (In case the Normally Closed mode is selected in initialization, [n_1] and the set value will displays in turn.)
   - Press the △ or ▽ button to enter into the value changing mode, then change the set value. (See "Value setting")
   - Check the corrected value, then press the SET button to set the set value.

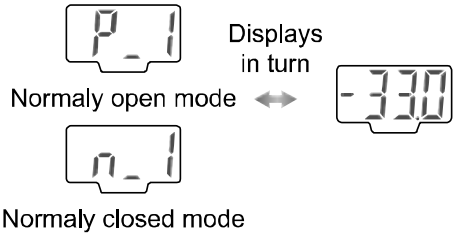

2. Selection of OUT1 [P_2] setting mode (Window comparator mode selected)
   - [P_2] and the current set value will displays in turn. (In case the normally closed mode selected in initialization, [n_2] and the set value will displays in turn.)
   - Press the △ or ▽ button to enter into the value changing mode, then change the set value. (See "Value setting")
   - Check the corrected value, then press the SET button to set the set value.

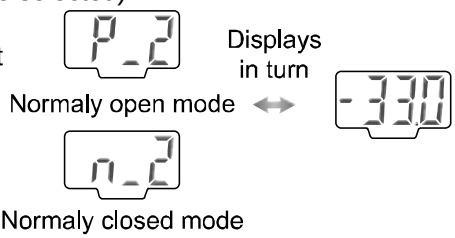

3. Selection of OUT1 [H_1] setting mode
   - [H_1] and the current set value will displays in turn.
   - Press the △ or ▽ button to enter into the value changing mode, then change the set value. (See "Value setting")
   - Check the corrected value, then press the SET button to set the set value.

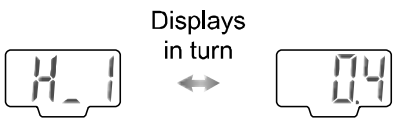

4. Selection of OUT2 setting mode
   - Set the set values [P_3] [P_4] and [H_2] of OUT2 as in OUT1.
     [P_3] [P_4] or [H_2] and current set value will displays in turn. (In case the normally closed mode selected in initialization, [n_3] [n_4] or [H_2] and set value will displays in turn.)
   - Press the △ or ▽ button to enter into the Value changing mode, then change the set value. (See "Value setting")
   - Check the corrected value, then press the SET button to set the set value.

5. Auto shift compensation value setting (PSE3□2(T)/3□5(T) models only)
   - [C_5] and Auto shift corrected value will displays in turn.
   - Check the corrected value, then press the SET button.
   - The pressure setting mode will be completed and return to the measurement mode.

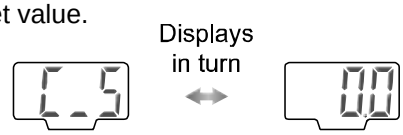

○Value setting

To input a value for pressure setting or other purposes:

1. Press the △ or ▽ button to enter the set value change mode. The 1st digit will flicker.
2. Press the △ or ▽ button to set a desired value.
   (No operation within thirty seconds after the set value change mode was selected results in automatic setting of the value appearing in the display window and in charging of the mode from set value change mode to set value indication mode.)
3. Press the SET button to make the value one digit higher flicker.
   (If the highest place is zero, [ ] or [ ] will flicker.)
   [ ] means "+zero", [ ] means "-zero".
   (In the case that the SET button is pressed in the highest place, the 1st digit will flicker.)
4. Press the SET button continuously for longer than one second to memorize the set value and to return to displaying set values.

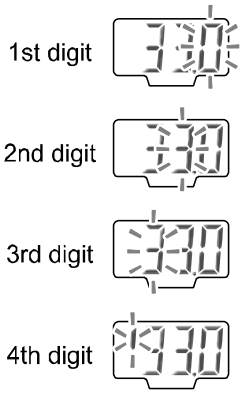

○Setting example

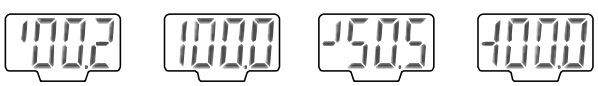

SMC

○Auto-preset

In case auto preset is selected in Initialize, this function stores in the memory a pressure setting value which is calculated from a measurement pressure as a reference value. The set value of product is automatically set to an optimum value by repeating absorption and non-absorption several times with a sample which is to be set up.

1. Selection of OUT1 auto preset mode
   - Press the SET button to display [AP1].
     (In case OUT1 setting is not necessary, press Δ button and ∇ button at the same time longer than one second.)
2. Preparation of unit for OUT1
   - Prepare a unit for which pressure for OUT1 is to be set.



Preparation of auto preset

3. Selection of auto preset value of OUT1 setting
   - Press the SET button to display [A1L].
   - Operate system so that pressure may change.
   - Detection will be made and a set value will be stored in the memory automatically and display [A1H].



Auto preset setting

4. Selection of OUT2 auto preset mode
   - Press the SET button to set [P_1], [H_1] ([n_1], [H_1] in normally closed mode) and display [AP2].
     (In case OUT2 setting is not necessary, press Δ and ∇ button at the same time longer than one second.)
5. Preparation of unit for OUT2 and pressure setting
   - Prepare a unit for which pressure for OUT2 is to be set. Press the SET button to display [A2L].
   - [A2L] is displayed and Detection will be made and a set value will be stored in the memory automatically and display [A2H].
6. Set up of OUT2 auto preset value
   - Press the SET button to set the set value of [P_3], [H_2] ([n_3], [H_2] in normally closed mode), and auto preset mode is finished.
   - The mode will return to the Measurement mode.

A pressure setting value in auto preset is as follows in normally open mode with OUT1.
(P_1 is n_1 in Normally Closed mode with OUT1.)

P_1 = A – (A – B)/4 A = maximum pressure value
H_1 = (A – B)/2 B = minimum pressure value

For OUT2 set-up, above P_1, n_1, and H_1 become P_3, n_3, and H_2 respectively.

○Fine adjustment mode (Fine adjustment function of display value)

1. Press the SET button and ∇ buttons simultaneously for longer than two seconds in the measurement mode. [FSt] and current pressure measurement value will displays in turn.
2. Press the Δ or ∇ button to change the set value. (The range to be changed: ±5%R.D.)
3. If no operation is made for longer than three seconds or press the SET button, the product will display the current pressure measurement value which will then displays in turn with [FSt].
4. Press the SET button to display an adjusted amount (percentage), which will then displays in turn with [FSC].
5. Press the SET button to return to the normal measurement mode.

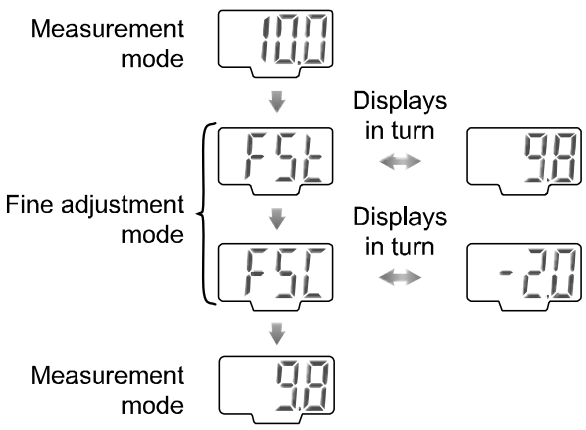

SMC

Other Functions

○Auto shift function

In case the source pressure fluctuates too much, the product may not be able to operate normally.
Auto shift is provided to compensate for the fluctuation of the source pressure.
While measured pressure becomes standard pressure value when auto shift input is received, this function correct set value of the switches.

•With auto shift

Set auto shift input as Lo at the time pressure source change, in order to memorize the pressure change and to correct pressure set value, so that correct decision emerge.

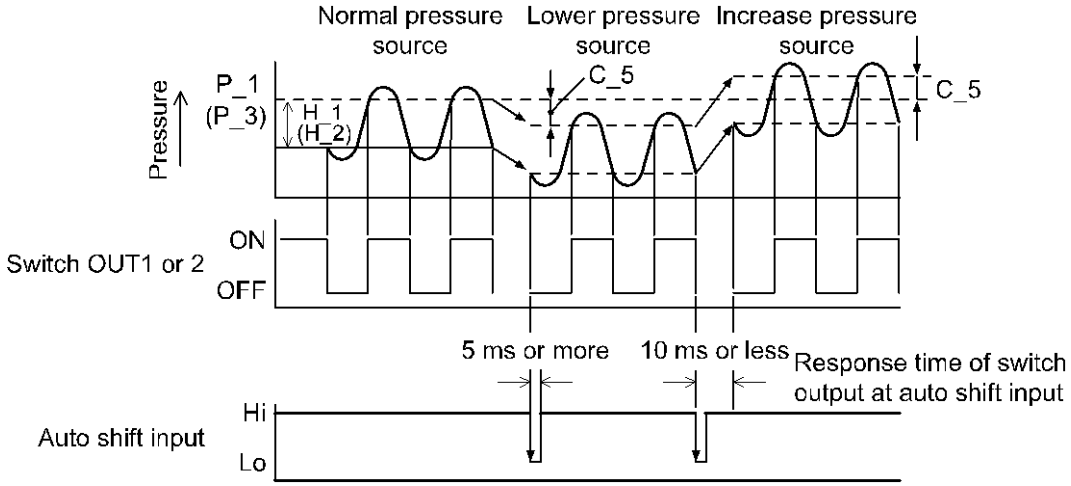

○Conditions and explanations for auto shift function

- •Keep constant pressure for 5ms or more from the close signal of auto shift input.
- •At auto shift input, the pressure at that time is memorized to [C_5] as corrected value, and the switch operates with the value which applied compensation value to setting value.
  Display indicates [ooo] for approx.1 sec.
- •The switch set as auto shift mode at the time of initial setting operates with the value which applied corrected value [C_5] to setting value.
- •OUT1 will operate with Auto shift function, when "A1" is selected.
  The operating value of OUT1 applies corrected value [C_5] to [P_1], [P_2] or [n_1], [n_2].
- •OUT2 will operate with Auto shift function, when "A2" is selected.
  The operating value of OUT2 applies corrected value [P_3], [P_4] or [n_3], [n_4].
- •Both OUT1 and OUT2 will operate with Auto shift function, when "Ab" is selected.
  The operating value of OUT1 and OUT2 applies corrected value [P_1] to [P_4] or [n_1] to [n_4].
- •Span is 10ms or less until switch output perform soon after auto shift input.
- •When corrected set value exceed the set pressure range with auto shift input, corrected value is not memorized and displays [o.r] for approx.1sec.
- •Correct value [C_5] after auto shift input vanish when off the power.
- •Correct value [C_5] for auto shift input function is reset as zero (Initial value) when re-supplied power.
- •In case of auto shift zero selected, the display indicates [0] (zero)] if the auto shift signal is inputted.

∗: No EEPROM in the memory of corrected value.

Using with auto shift input, accepted set range is like below

	Set pressure range	Accepted set range
For compound	−101.0 to 101.0 kPa	−101.0 to 101.0 kPa
For vacuum	10.0 to −101.0 kPa	−101.0 to 101.0 kPa
For low pressure	−10 to 100.0 kPa	−100.0 to 100.0 kPa
For positive	−0.1 to 1.000 MPa	−1.000 to 1.000 MPa
	−50 to 500 kPa	−500 to 500 kPa
For low differential	−0.2 to 2.00 kPa	−2.00 to 2.00 kPa

○Peak and bottom hold display function

Maximum and minimum values are always detected and updated during measurement. Displayed values can be held.

- In peak hold, press the [Δ] button for longer than one second to make flicker and to hold the maximum pressure value. To reset holding, press the [Δ] button again for more than one second. The measurement mode will be set.
- In bottom hold, press the [∇] button for longer than one second to make flicker and to hold the minimum pressure value. To reset holding, press the [∇] button again more than one second. The Measurement mode will be set.
- Press continuously the [Δ] and [∇] buttons simultaneously more than one second during displaying the peak/bottom hold values to reset the maximum or minimum pressure value.

○Key lock function

This function prevents errors such as changing a set value by mistake.

Lock

- Keep pressing the [SET] button longer than four seconds, remove the finger off the button when [UnL] is displayed.
- Press the [Δ] or [∇] buttons to set the display to [LoC].
- Press the [SET] button and return to the Measurement mode.

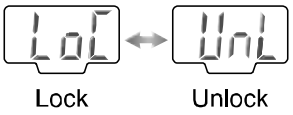

Lock Unlock

Unlock

- Press the [SET] button longer than four seconds, remove the finger off the button when [LoC] is displayed.
- Press the [Δ] or [∇] buttons to change the display to [unL].
- Press the [SET] button and return to the Measurement mode.

○Zero clear function

A displayed value can be adjusted to zero when pressure to be measured is within ±7%F.S. of the atmospheric pressure.

(There is variation in ±4 digits according to a product characteristic.)

- Press continuously the [Δ] and [∇] buttons simultaneously more than one second to reset to "0" on the display.
- The mode will return to the Measurement mode automatically.

Maintenance

How to reset the product for power cut or forcible de-energizing

The setting of the product is remained as that before power cut or de-energizing.
The output condition is also basically recovered to that before power cut or de-energizing, but may change depending on the operating environment. Therefore, check the safety of whole facility before operating the product.
If the facility is under accurate control, wait until it has warmed up (20 to 30 minutes).

Troubleshooting

○Troubleshooting

Applicable pressure switch: **PSE300**

If a cause applicable to the failure cannot be identified and normal operation can be recovered by replacement with a new Pressure switch, this indicates that the Pressure switch itself was broken. The Pressure switch breakage can be caused by operating environment (network construction, etc.), and so consult with SMC separately to obtain countermeasures.

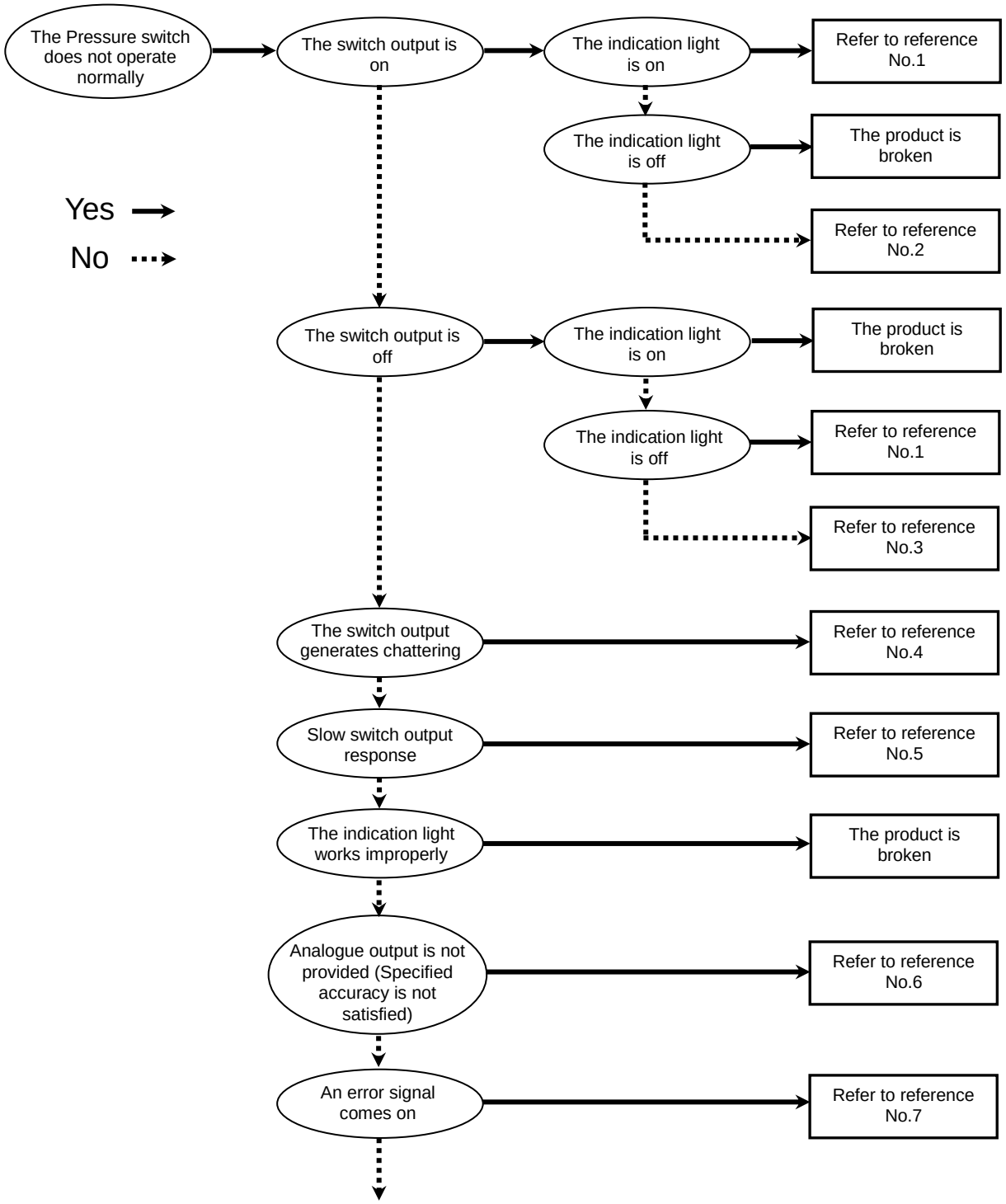

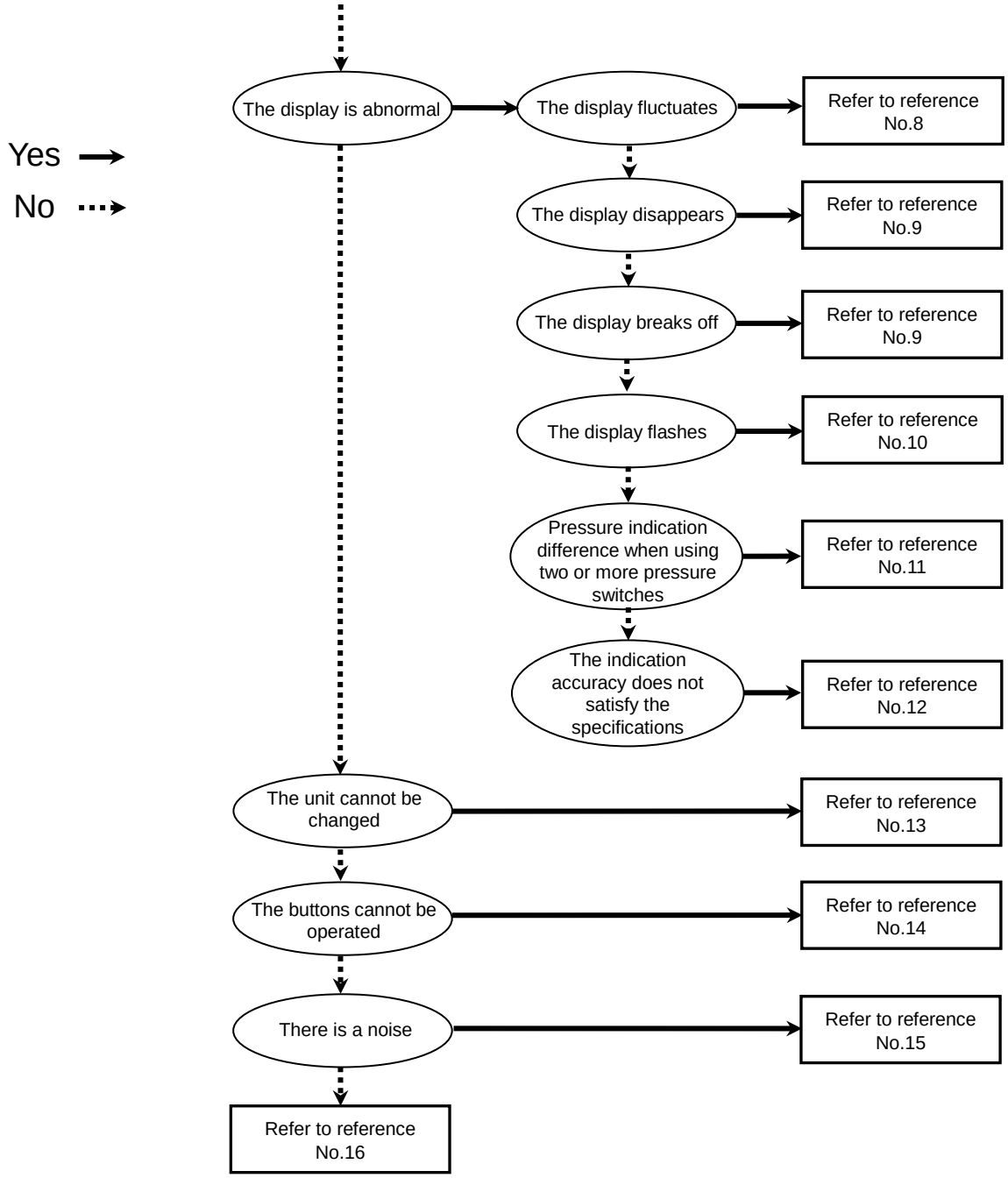
Yes
No
The display is abnormal
The display fluctuates
Refer to reference No.8
The display disappears
Refer to reference No.9
The display breaks off
Refer to reference No.9
The display flashes
Refer to reference No.10
Pressure indication difference when using two or more pressure switches
Refer to reference No.11
The indication accuracy does not satisfy the specifications
Refer to reference No.12
The unit cannot be changed
Refer to reference No.13
The buttons cannot be operated
Refer to reference No.14
There is a noise
Refer to reference No.15
Refer to reference No.16

○Cross-reference for troubleshooting

Reference No.	Problem	Possible cause	Investigation method	Countermeasure
1	•Output remains on. Indication light remains on. •Output remains off. Indication light remains off.	Wrong pressure setting	(1)Check the set pressure. (2)Check the settings of the operation mode, hysteresis and output style. (Hysteresis mode/window comparator mode, normal output/reversed output)	(1)Reset the pressure setting. (2)Reset the setting of function.
		Product failure		Replace the product.
2	Output remains on. Indication light works correctly.	Incorrect wiring	Check the wiring of the output line. Check if the load is connected directly to DC(+) or DC(-).	Correct the wiring.
		Product failure		Replace the product.
3	Output remains off. Indication light works correctly.	Incorrect wiring	Check the wiring of the output line. Check if the load is connected directly to DC(+) or DC(-).	Correct the wiring.
		Unsuitable model selection	Check if PNP is used even though NPN should have been selected, or the other way around.	Review the selected model (output type).
		Cable breakage	Check if there is bending stress applied to any parts of the cable. (Bending radius and tensile force applied to the cable)	Correct the wiring conditions. (Adjust the tensile force and widen the bending radius.)
		Product failure		Replace the product.
4	Switch output generates chattering.	Incorrect wiring	Check the wiring. Check if the brown and blue wires are connected to DC(+) and DC(-) respectively, and if the output line is about to come off (contact failure).	Correct the wiring.
		Wrong setting	(1)Check the set pressure. (2)Check if the hysteresis range is too narrow. (3)Check the response time set as initial setting. Check if the response time is too short.	(1)Reset the pressure setting. (2)Widen the hysteresis. (3)Reset the setting of function.
		Product failure		Replace the product.
5	Slow switch output response	Incorrect pressure setting	(1)Check the pressure setting. Check if the detected pressure and the set pressure value have the same value or are too close. (2)Check the response time set as initial setting. Check if the response time is too long.	(1)Reset the pressure setting. Set up the pressure setting value so it is not too close to the detected pressure value. (2)Reset the setting of function.

Reference No.	Problem	Possible cause	Investigation method	Countermeasure
6	Analogue output is not provided. (Specified accuracy is not satisfied.)	Incorrect wiring	Check if the analogue output line is connected with a load.	Correct the wiring.
		Non-compliance with the load spec.	(1) Check if the proper load is connected. (2) Check if input impedance of input equipment (A/D transformer) is proper.	Connect a proper load.
		Insufficient warm-up	Check if the product satisfies the specified accuracy in 20 minutes after supplying power.	After energizing, indication and output can drift. For detecting fine pressure, warm up the product for 20 to 30 minutes.
		Product failure		Replace the product.
7	•An over current error (Er1 and 2) is indicated. •System error (Er4, 6, 7, and 8) is indicated. •The display shows "HHH". •The display shows "LLL". •Zero-clear error (Er3) is indicated.	Over current to the output (Er1 and 2)	(1)Check if a current of 80 mA or more is flowing to the output. (2)Check if the connected load satisfies the specifications, and if the load is shorted. (3)Check if a relay without a surge voltage suppressor is connected. (4)Check if the wiring is in the same route as (or bundled together with) a high-voltage line or the power line.	(1), (2)Connect the load as specified. (3)Use a relay with a surge voltage suppressor or take a measure to prevent noise. (4)Separate the wiring from the high-voltage line and/or power line.
		Improper transaction of the internal data of the Pressure switch (Er4, 6, 7, and 8)	(1)Check if there is noise interference such as static electricity. Check if there is a noise source (2)Check if the power supply voltage is in the range of 12 to 24 VDC.	(1)Remove the noise and the noise source (or take measures to prevent noise interference), and turn off the power supply. Then, supply the power again. (2)Supply power voltage of 12 to 24 VDC.
		Applied pressure is over the upper limit (HHH).	(1)Check if the pressure gets over the upper limit of the set pressure range. (2)Check if foreign matter got into the piping. (3)The connector for sensor may not be connected correctly.	(1)Bring the pressure back within the set pressure range. (2)Take measures to prevent foreign matter from getting into the piping. (3)Check the wires and contact of the connector for sensor.
		Applied pressure is under the lower limit (LLL).	(1)Check if the pressure gets below the lower limit of the set pressure range. (2)Check if foreign matter got into the piping. (3)The connector for sensor may not be connected correctly.	(1)Bring the pressure back within the set pressure range. (2)Take measures to prevent foreign matter from getting into the piping. (3)Check the wires and contact of the connector for sensor.
		Pressure is not atmospheric pressure at zero-clear operation (Er3)	Check if the pressure over ±7%F.S. of the atmospheric pressure is applied.	Return the applied pressure to atmospheric pressure, and retry the zero clear operation.
		Product failure		Replace the product.

Reference No.	Problem	Possible cause	Investigation method	Countermeasure
8	Indicated values fluctuate.	Incorrect power supply	Check if the power supply voltage is within the range of 12 to 24 VDC.	Supply power supply voltage of 12 to 24 VDC.
		Incorrect wiring	Check the wiring to the power supply. Check if the brown and blue wires are connected to DC(+) and DC(-) respectively and if the output line is about to come off (contact failure).	Correct the wiring.
9	•Indicator turns off. •A part of the indication misses.	Incorrect power supply	Check if the power supply voltage is within the range of 12 to 24 VDC.	Supply power supply voltage of 12 to 24 VDC.
		Power saving mode	Check if the power saving mode is selected.	Reset the setting of function.
		Product failure		Replace the product.
10	Indicator is blinking.	The peak value/bottom value indication mode is selected.	Check if the peek value or bottom value indicating mode is selected.	Turn off the peak value/bottom value indication mode.
		Wiring failure	(1)Check the power supply wiring. (2)Check if bending stress is being applied to a specific part of the cable.	(1)Correct the wiring. (2)Correct the wiring (bending radius and stress).
11	Pressure indication difference when using two or more Pressure switches.	Dispersion within the indication accuracy range	Check if the dispersion is within the indication accuracy range.	Use the fine adjustment mode to adjust the indication if the dispersion is within the indication accuracy range.
		Product failure		Replace the product.
12	The pressure indication accuracy does not satisfy the specifications.	Foreign matter	Check if foreign matter has entered the pressure port.	Install a 5 μm filter to prevent foreign matter from getting into the pressure port. Also, clean the filter regularly to prevent drainage deposits.
		Air and liquid leakage	Check if air and liquid are leaking from the piping.	Rework the piping. If excessive tightening torque over the specified range is applied, a mounting screw, mounting bracket, and product may be broken.
		Insufficient warm-up	Check if the product satisfies the specified accuracy 20 minutes after supplying power.	After energizing, indication can drift. For detecting fine pressure, warm up the product for 20 to 30 minutes.
		Product failure		Replace the product.

Reference No.	Problem	Possible cause	Investigation method	Countermeasure
13	The unit cannot be changed.	Improper model selection (Selection of model "without unit conversion function")	Check if there is a "-M" at the end of the part number printed on the product	"M" in the part number means that the unit cannot be changed. ∗: The unit change function is not available in Japan due to a new measurement law. ∗: It is fixed to the SI unit "kPa", "MPa".
		Product failure		Replace the product.
14	The buttons cannot be operated.	Key lock mode	Check if the key lock mode is turned on.	Turn off the key lock mode.
		Product failure		Replace the product.
15	Noisy.	Air and liquid leakage	Check if air liquid are leaking from the piping.	Rework the piping. If excessive tightening torque over the specified range is applied, a mounting screw, mounting bracket, and product may be broken.
		Product failure		Replace the product.
16	The operation is unstable. (Chattering)	Effect of pressure source fluctuation due to small hysteresis or too early of a response time	(1)Check the set pressure (hysteresis) (2)Check the response time	(1)Check the pressure setting. (2)Reset the setting of function.
		Incorrect wiring/ cable breakage	(1)Check the power supply wiring. (2)Check if bending stress is applied to a specific part of the cable. (bending radius and tensile force applied to the cable)	(1)Correct the wiring (2)Correct the wiring conditions. (Adjust the tensile force and widen the bending radius.)
		Product failure		Replace the product.

○Error indication function

This function displays error location and nature when a problem or an error occurs.

Error Name		Error Display	Error Type	Troubleshooting
Over current Error	OUT1	Er 1	A load current of switch output is 80 mA or more.	Turn the power off and remove the output factor for the over current. Then turn the power on.
	OUT2	Er2		
Residual pressure Error		Er3	During zero clear operation, pressure over ±7%F.S. is applied. After 3 s, the mode will reset to the measurement mode. ±4 digits of the zero clear range varies with individual product differences.	Perform zero clear operation again after restoring the applied pressure to an atmospheric pressure condition.
Applied pressure Error		HHH	Pressure over max. limit of set pressure range is applied or it is over the display range.	Check proper connection of the sensor and make sure the applied pressure to the value is within the set pressure range. Set back an applied pressure into within set pressure range. While using the auto shift, even if it exceeds the display continuously.
		LLL	The sensor may not be connected or connected incorrectly. Pressure over min. limit of set pressure range is applied or it is over the display range.	
Auto shift Error		o.r	The measured pressure at auto-shift input exceeds the set pressure range. ∗: After 1 s, measurement mode returns automatically.	Auto shift input is invalid by connected equipment and machine. Check the connected equipment and machine.
System Error		Er4 Er6 Er7 Er8	Displayed in the case of an internal data error.	Turn the power off and turn it on again. If resetting fails, an investigation by SMC Corporation will be required.

If the error can not be reset after the above measures are taken, then please contact SMC.

Specification

■Specifications

Model No.		PSE3□□					
Applicable pressure sensor		For compound	For vacuum	For low pressure	For positive		For low differential
Rated pressure range		-100 to 100 kPa	0 to -101 kPa	0 to 100 kPa	0 to 1 MPa	0 to 500 kPa	0 to 2 kPa
Set pressure range *1		-101 to 101 kPa	10 to -101 kPa	-10 to 100 kPa	-0.1 to 1 MPa	-50 to 500 kPa	-0.2 to 2 kPa
Set pressure resolution		0.2 kPa	0.1 kPa	0.1 kPa	0.001 MPa	1 kPa	0.01 kPa
Power supply voltage		12 to 24 VDC, ripple (p-p) 10% or less (Protected against inverse connection)					
Current consumption		50 mA or less (No load)					
Sensor input signal		PSE30□: Voltage input 1 to 5 VDC (Input impedance: 1 MΩ) PSE31□: Current input 4 to 20 mADC (Input impedance: 100 Ω)					
	Input point	1 input					
	Input protection	With over voltage protection (Max. 26.4 V)					
Hysteresis		Variable					
Switch output		NPN or PNP open collector output, 2 outputs					
	Max. load current	80 mA					
	Max. applied voltage	30 VDC (NPN output)					
	Residual voltage	1 V or less (80 mA load current)					
	Output protection	Short circuit protection					
Response time		1 ms or less					
	Chattering-proof func.	Chattering-proof func. working: 20 ms, 160 ms, 640 ms, 1280 ms selected					
Repeatability		±0.1%F.S.					
Analogue output	Voltage output *2	Output voltage: 1 to 5 V (within rated pressure range), Output impedance: approx.1 kΩ Linearity: ±0.2%F.S. (Without sensor), Response time: 150 ms or less					
	Accuracy	±0.6%F.S.			±1.0%F.S.		±1.5%F.S.
	Current output *2	Output Current: 4 to 20 mA (within rated pressure range), Max. load impedance: 300 Ω (power supply voltage: 12 VDC) 600 Ω (power supply voltage: 24 VDC) Min. load impedance: 50 Ω, Linearity: ±0.2%F.S. (Without sensor), Response time: 150 ms or less					
	Accuracy	±1.0%F.S.			±1.5%F.S.		±2.0%F.S.
Indicator accuracy		±0.5%F.S. ±2 digits	±0.5%F.S. ± 1digit				
LCD display		3 1/2 digits 7-segment display, Dual-colour display (Red/Green)					
Indicator		OUT1: Illuminate ON (Green), OUT2: Illuminate ON (Red)					
Auto shift input *2		Non-Voltage input (reed or solid state), Low level input: 5 ms or more, Low level: 0.4 V or less					

∗1: Using with auto shift input, accepted set range is different depends on the set pressure ranges. (Refer to page 21.)

∗2: Auto shift input is not applied when analogue output type is selected. And analogue output is not applied when auto shift input type is selected.

∗3: Fixed unit is as below
for compound and vacuum: kPa, kgf/cm^2, bar, psi, mmHg, inHg
for low and positive pressure: MPa, kPa, kgf/cm^2, bar, psi,
for low differential pressure: kPa, mmH_2O

Model No.		PSE3□□
Environment	Enclosure	IP40
	Ambient temp. range	Operation: 0 to 50 °C, Storage: -10 to 60 °C (No condensation or freezing)
	Ambient humidity range	Operation, Storage: 35 to 85%RH (No condensation)
	Withstand voltage	1000 VAC, 1 minute Between lead block and case
	Insulation resistance	50 MΩ or more at 500 VDC Between lead block and case
Temp. characteristic		±0.5%F.S. or less of detected pressure (25 °C)
Connection method		PSE3□□: Power supply and output 5P connector. Sensor 4P connector, PSE3□□T: Terminal block
Material		Front case: PBT, Rear case: PBT (PSE3□□), M-PPE (PSE3□□T)
Weight	With power and output cable	PSE3□□: 85 g
	Without power and output cable	PSE3□□: 30 g, PSE3□□T: 50 g
Power supply/Output connection cable		Oil resistance vinyl cabtyre cable 5 cores ϕ4.1, 2 m Sectional area of conductor: 0.2 mm^2 Outside diameter of insulator: 1.12 mm
Standard		CE, UL/CSA, RoHS

○Analogue output

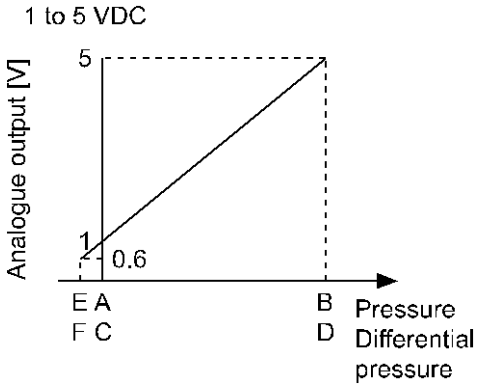

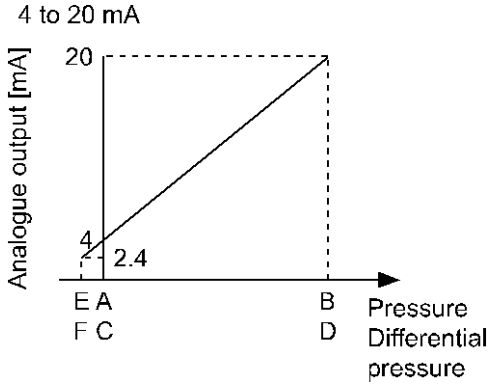

Range	Rated pressure range	A	B	E
For vacuum	0 to -101 kPa	0	-101 kPa	10.1 kPa
For compound	-100 kPa to 100 kPa	-100 kPa	100 kPa	-
For low pressure	0 to 100 kPa	0	100 kPa	-10 kPa
For positive pressure	0 to 1 MPa	0	1 MPa	-0.1 MPa
	0 to 500 kPa	0	500 kPa	-50 kPa

Range	Rated pressure range	C	D	F
For low differential pressure	0 to 2 kPa	0	2 kPa	-0.2 kPa

■Dimensions

○Body dimensions

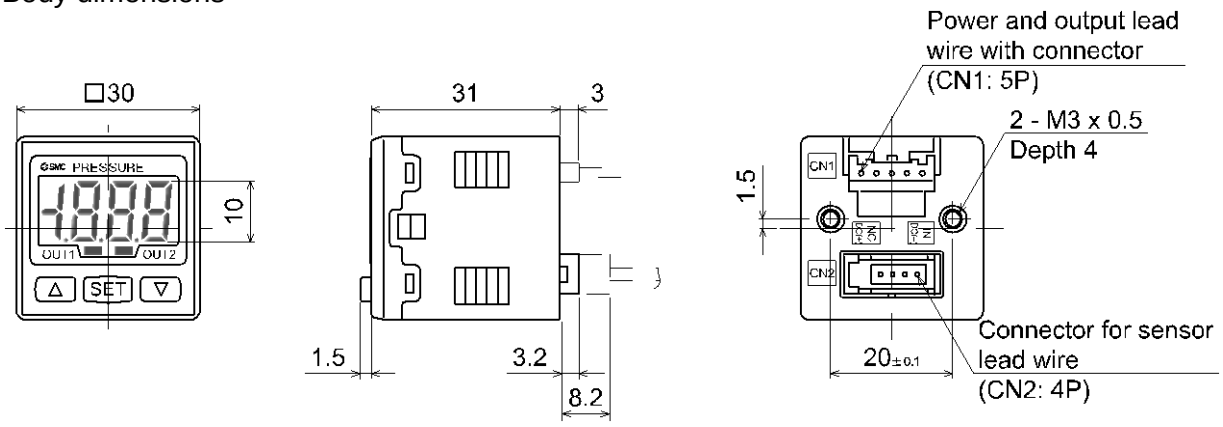

○Mounting using mounting option

•Mounting by bracket

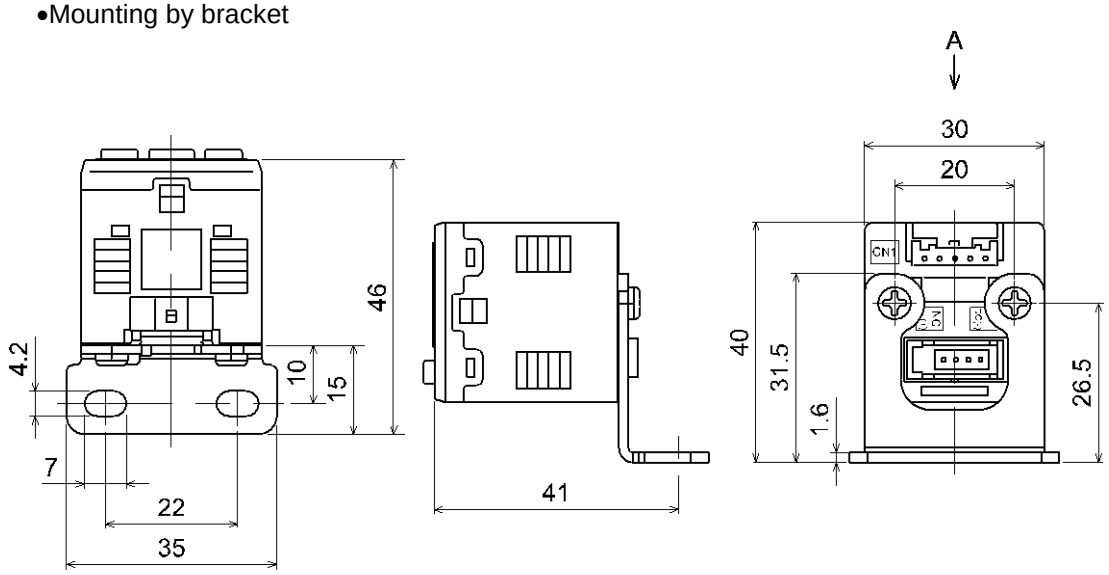

Drawing looking from A

•Mounting by panel mount

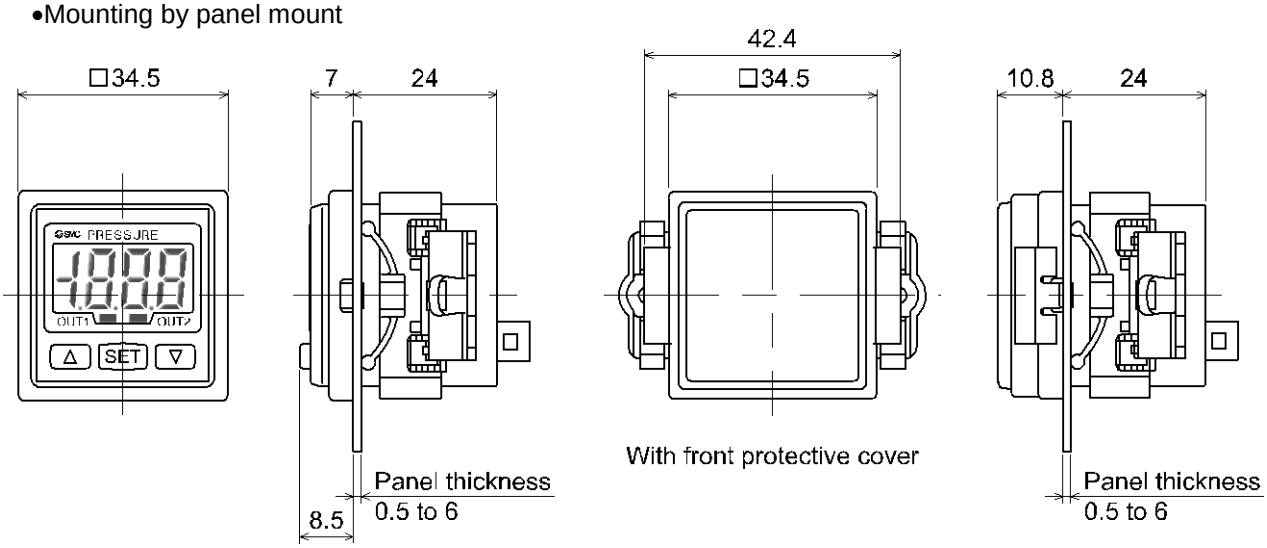

○Panel cutout dimension

∗: Panel thickness: 0.5 to 6 mm

Single Pressure sensor

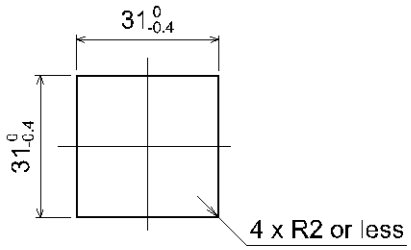

Tow or more in a row (Horizonal)

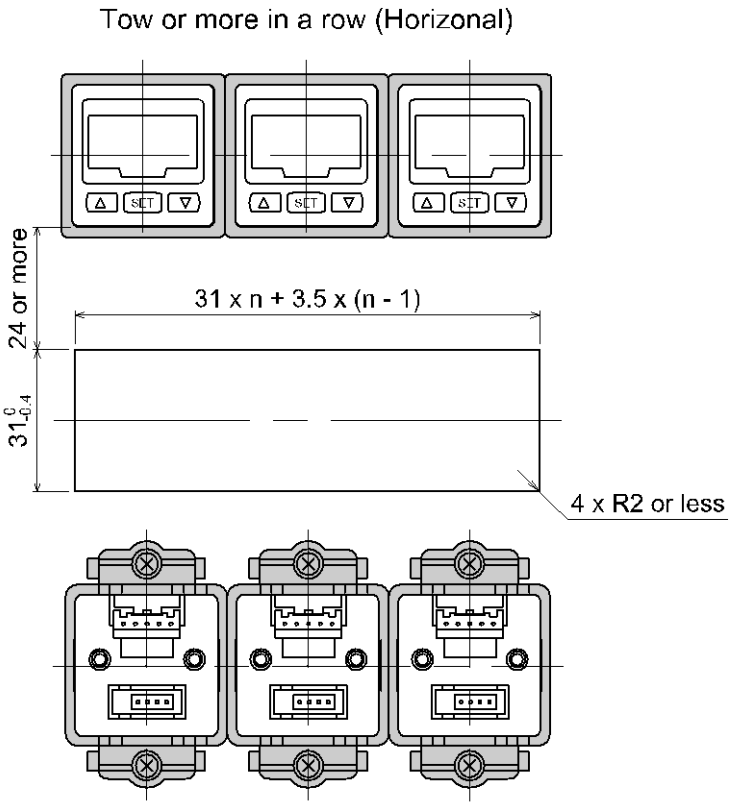

Tow or more in a row (Vertical)

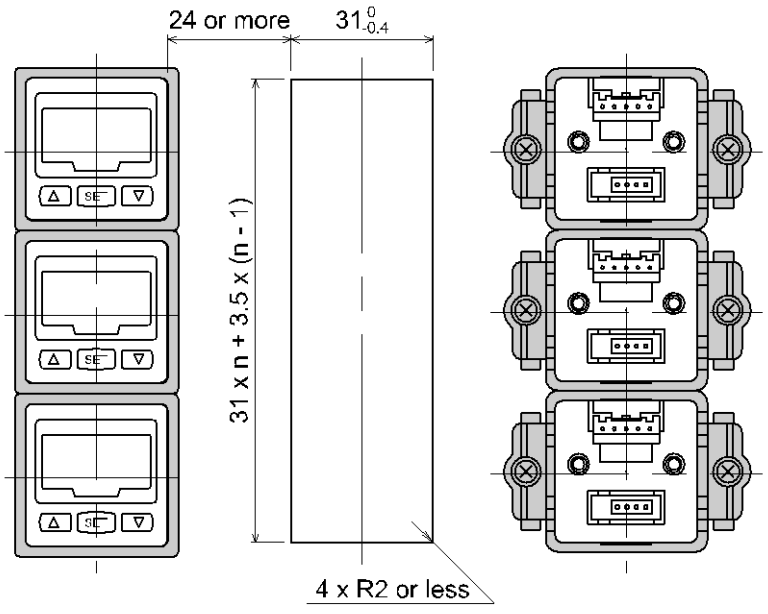

○PSE3□□T

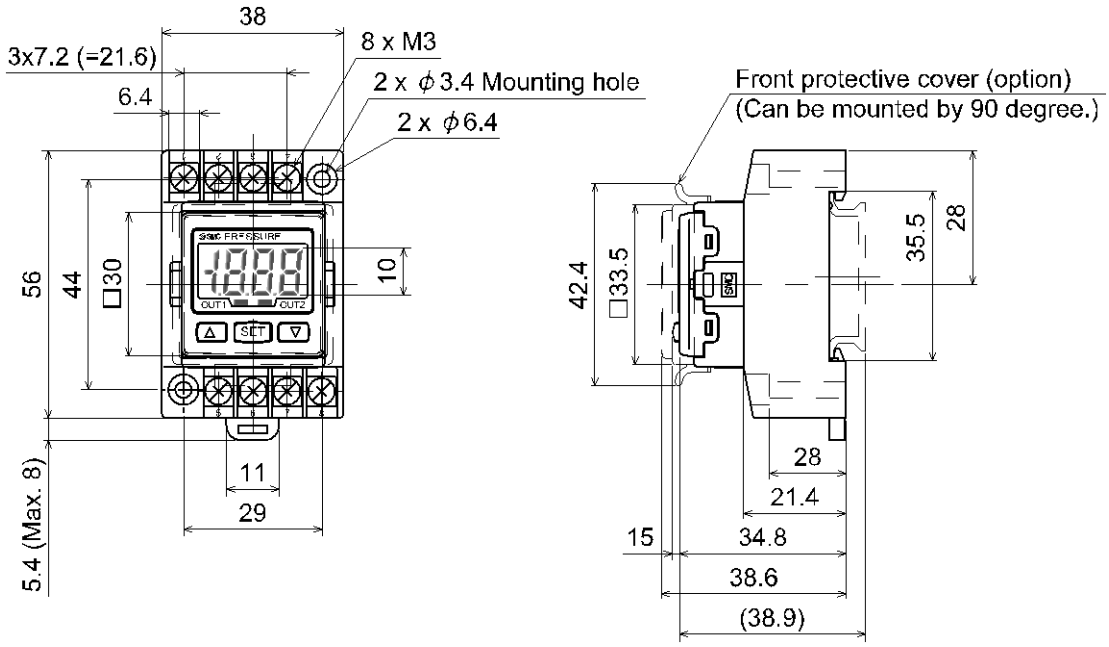
38
8 x M3
3x7.2 (=21.6)
2 x ϕ3.4 Mounting hole
6.4
2 x ϕ6.4
Front protective cover (option)
(Can be mounted by 90 degree.)
56
44
□30
10
11
29
5.4 (Max. 8)
42.4
□33.5
35.5
28
28
21.4
15
34.8
38.6
(38.9)

Revision history
C: Revision and Format change.
D: Contents revised in several places.
E: Contents revised in several places.
F: Contents revised in several places.
G: Contents revised in several places. [July 2018]

SMC Corporation

4-14-1, Sotokanda, Chiyoda-ku, Tokyo 101-0021 JAPAN
Tel: + 81 3 5207 8249 Fax: +81 3 5298 5362
URL http://www.smcworld.com

Note: Specifications are subject to change without prior notice and any obligation on the part of the manufacturer.
© 2007-2018 SMC Corporation All Rights Reserved

No.PS※※-OMG0002-G