Compact Cylinder/Guide Rod Type

Series CQM



Lateral load resisting
2 to 4 times
∗ Compared to compact cylinder Series CQ

Non-rotating accuracy
±**0.2°** or less
Refer to page 794 for details.

Load can be directly mounted.

Mounting dimensions compatible with Series CQS, CQ2.

External dimensions

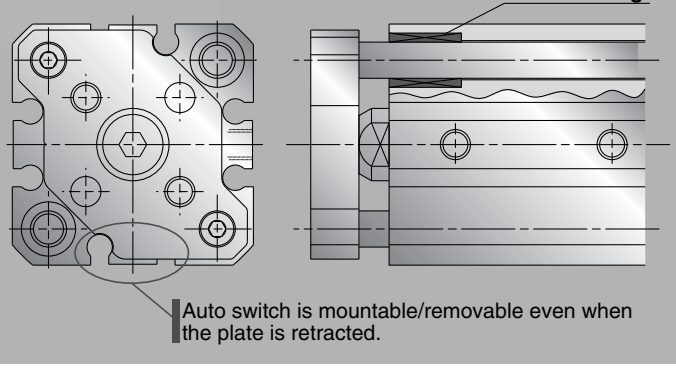

Auto switch is mountable/removable even when the plate is retracted.

Series Variations

Series	Bore size (mm)	Standard stroke (mm)	Cushion
		5 10 15 20 25 30 35 40 45 50 75 100	
CQM	12, 16		Rubber bumper
	20, 25		
	32, 40		
	50, 63, 80, 100		

Compact Cylinder: Guide Rod Type

Series CQM

ø12, ø16, ø20, ø25, ø32, ø40, ø50, ø63, ø80, ø100

How to Order

CQM B 20 □ – 10

With auto switch **CDQM B 20 □ – 10 – M9BW □**

With auto switch
(Built-in magnet)

Mounting bracket

B	Through-hole (Standard)
A	Both ends tapped (ø32 to ø100)

Note 1) Cylinder bodies of ø12 to ø25 are common for both B (through hole) and A (both ends tapped) types. Symbol to order is unified to "B" for those sizes.
Note 2) Cylinder mounting bolts are not included. Order them separately referring to Mounting Bolts for CQM on pages 796 and 797.
Note 3) Contact SMC for the other mounting types.

Bore size

12	12 mm	**40**	40 mm
16	16 mm	**50**	50 mm
20	20 mm	**63**	63 mm
25	25 mm	**80**	80 mm
32	32 mm	**100**	100 mm

Thread type

Nil	M thread	ø12 to ø25
	Rc	ø32 to ø100
TN	NPT	
TF	G	

Note) M thread to be used for without auto switch type of ø32, 5 stroke exceptionally. There is no need to enter the symbol when ordering.

Cylinder stroke (mm)
Refer to the next page for standard and intermediate strokes.

Auto switch type

Nil	Without auto switch

∗ Refer to the table below for the applicable auto switch model.

Number of auto switches

Nil	2 pcs.
S	1 pc.
n	"n" pcs.

Built-in Magnet Cylinder Model

If a built-in magnet cylinder without an auto switch is required, there is no need to enter the symbol for the auto switch.
(Example) CDQMB32-10

Applicable Auto Switch/Refer to pages 1263 to 1371 for further information on auto switches.

Type	Special function	Electrical entry	Indicator light	Wiring (Output)	Load voltage DC	Load voltage AC	Auto switch model: Perpendicular ø12 to ø25	Perpendicular ø32 to ø100	In-line ø12 to ø25	In-line ø32 to ø100	Lead wire length (m): 0.5 (Nil)	1 (M)	3 (L)	5 (Z)	None (N)	Pre-wired connector	Applicable load	
Solid state switch	——	Grommet	Yes	3-wire (NPN)	5 V, 12 V		**M9NV**		**M9N**		●	●	●	○	—	○	IC circuit	Relay, PLC
				3-wire (PNP)			**M9PV**		**M9P**		●	●	●	○	—	○		
				2-wire	12 V		**M9BV**		**M9B**		●	●	●	○	—	○	—	
		Connector					—	**J79C**	—		●	—	●	●	●	—		
	Diagnostic indication (2-color indication)	Grommet		3-wire (NPN)	5 V, 12 V		**M9NWV**		**M9NW**		●	●	●	○	—	○	IC circuit	
				3-wire (PNP)			**M9PWV**		**M9PW**		●	●	●	○	—	○		
				2-wire	12 V		**M9BWV**		**M9BW**		●	●	●	○	—	○	—	
	Water resistance (2-color indication)			3-wire (NPN)	5 V, 12 V		**M9NAV**		**M9NA**		○	○	●	○	—	○	IC circuit	
				3-wire (PNP)			**M9PAV**		**M9PA**		○	○	●	○	—	○		
				2-wire	12 V		**M9BAV**		**M9BA**		○	○	●	○	—	○	—	
	With diagnostic output (2-color indication)			4-wire	5 V,12 V		—		—	**F79F**	●	—	●	○	—	○	IC circuit	
	Magnetic field resistant (2-color indication)			2-wire (Non-polar)	—		—		—	**P4DW****	—	—	●	●	—	○	—	
Reed switch	——	Grommet	Yes	3-wire (NPN equiv.)	—	5 V	**A96V**		**A96**		●	—	●	—	—	—	IC circuit	—
				2-wire	—	200 V	—	**A72**	—	**A72H**	●	—	●	—	—	—	—	Relay, PLC
					24 V	12 V	100 V	**A93V**		**A93**	●	—	●	—	—	—		
			No			5 V,12 V	100 V or less	**A90V**		**A90**	●	—	●	—	—	—	IC circuit	
		Connector	Yes			12 V	—	—	**A73C**	—	●	—	●	●	●	—	—	
			No			5 V,12 V	24 V or less	—	**A80C**	—	●	—	●	●	●	—	IC circuit	
	With diagnostic output (2-color indication)	Grommet	Yes			—	—	—	**A79W**	—	●	—	●	—	—	—	—	

∗ Lead wire length symbols: 0.5 m····· Nil (Example) M9NW
1 m····· M (Example) M9NWM
3 m····· L (Example) M9NWL
5 m····· Z (Example) M9NWZ
None····· N (Example) J79CN

∗ Solid state auto switches marked with a "○" are produced upon receipt of order.
∗∗ D-P4DWL type is compatible with bore sizes ø40 to ø100.
∗ Only D-P4DW type is assembled when shipped.

∗ Besides the models in the above catalog, there are some other auto switches that are applicable. For more information, refer to page 803.
∗ Refer to pages 1328 and 1329 for the details of auto switches with a pre-wired connector.
∗ When mounting D-A9□(V)/M9□(V)/M9□W(V)/M9□A(V)L types on a side other than the port side with ø32 to ø50 cylinders, order auto switch mounting brackets separately. Refer to page 803 for details.



⚠ Caution

① Do not use the product as a stopper.
② Do not disassemble and modify the product.

Specifications

Bore size (mm)	12	16	20	25	32	40	50	63	80	100
Model	Pneumatic (non-lube) type									
Action	Double acting, Single rod									
Fluid	Air									
Proof pressure	1.5 MPa									
Maximum operating pressure	1.0 MPa									
Minimum operating pressure	0.12 MPa		0.1 MPa							
Ambient and fluid temperature	Without auto switch: –10°C to 70°C (No freezing) With auto switch: –10°C to 60°C (No freezing)									
Cushion	Rubber bumper on both ends									
Stroke length tolerance	+1.0 mm* 0									
Mounting	Through-holes									
Piston speed	50 to 500 mm/s						50 to 300 mm/s			

* Stroke length tolerance does not include the amount of dumper change.

Standard Stroke

Bore size (mm)	Standard stroke (mm)
12,16	5, 10, 15, 20, 25, 30
20,25	5, 10, 15, 20, 25, 30, 35, 40, 45, 50
32,40	5, 10, 15, 20, 25, 30, 35, 40, 45, 50, 75, 100
50,63,80,100	10, 15, 20, 25, 30, 35, 40, 45, 50, 75, 100

Manufacture of Intermediate Stroke

Description	
Spacers are installed in a cylinder with standard stroke.	
Bore size (mm)	Description
12 to 32	Available in 1 mm stroke increments
40 to 100	Available in 5 mm stroke increments

Intermediate stroke range	
Bore size (mm)	Intermediate stroke range (mm)
12, 16	1 to 29
20, 25	1 to 49
32	1 to 99
40 to 100	5 to 95

Example) Part number: CQMB32–57
Constructed by installing an 18 mm spacer in the standard stroke cylinder CQMB32-75. B dimension: 108 mm.

Theoretical Output

Unit: N

Bore size (mm)	Operating direction	Operating pressure (MPa) 0.3	0.5	0.7
12	IN	25	42	59
	OUT	34	57	79
16	IN	45	75	106
	OUT	60	101	141
20	IN	71	118	165
	OUT	94	157	220
25	IN	113	189	264
	OUT	147	245	344
32	IN	181	302	422
	OUT	241	402	563
40	IN	317	528	739
	OUT	377	628	880
50	IN	495	825	1150
	OUT	589	982	1370
63	IN	840	1400	1960
	OUT	936	1560	2184
80	IN	1362	2270	3178
	OUT	1509	2515	3521
100	IN	2145	3575	5005
	OUT	2355	3925	5495

Auto Switch Mounting Bracket Mass

Mounting bracket part no.	Applicable cylinder bore size	Mass (g)
BQ-2	ø32 to ø100	1.5
BQP1-050	ø40 to ø100	16

Mass

Without Auto Switch

Unit: g

Bore size (mm)	Cylinder stroke (mm) 5	10	15	20	25	30	35	40	45	50	75	100
12	44	52	60	69	77	86	—	—	—	—	—	—
16	56	67	77	87	97	108	—	—	—	—	—	—
20	92	107	122	137	152	167	183	198	213	227	—	—
25	125	143	162	180	198	216	234	252	270	288	—	—
32	182	205	228	250	274	297	320	343	366	389	553	669
40	269	295	320	345	370	396	421	446	471	497	692	823
50	—	500	540	580	620	661	701	740	780	821	1133	1341
63	—	745	795	845	894	944	993	1043	1093	1143	1535	1791
80	—	1400	1479	1559	1639	1719	1800	1880	1959	2039	2671	3067
100	—	2365	2468	2571	2674	2776	2880	2983	3086	3188	4053	4574

With Auto Switch (Built-in magnet)

Unit: g

Bore size (mm)	Cylinder stroke (mm) 5	10	15	20	25	30	35	40	45	50	75	100
12	52	59	68	77	84	93	—	—	—	—	—	—
16	66	77	87	97	107	118	—	—	—	—	—	—
20	122	138	153	168	182	197	213	227	242	257	—	—
25	168	186	205	223	240	258	277	295	313	331	—	—
32	241	264	287	309	333	356	379	401	425	448	564	680
40	345	371	396	421	447	473	498	523	548	574	705	836
50	—	618	658	698	738	779	819	858	898	939	1147	1355
63	—	903	953	1003	1052	1102	1152	1201	1251	1301	1557	1813
80	—	1661	1740	1820	1900	1980	2061	2141	2220	2300	2695	3090
100	—	2745	2848	2950	3053	3156	3260	3362	3465	3568	4088	4609

Add each mass of auto switches and mounting brackets.
Refer to pages 1263 to 1371 for auto switch mass.

Plate Non-rotating Accuracy

Non-rotating accuracy without load is designed to be same or less than the figures shown in the table below at the retracted cylinder end (plate).

Bore size (mm)	Non-rotating accuracy
12, 16	±0.2°
20 to 100	±0.1°

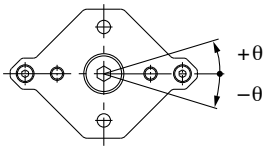

Plate Allowable Rotational Torque

Make sure to operate strictly within the allowable rotation torque range to the plate.

Operation outside of this range may result in shorter service life or damage to the devise.

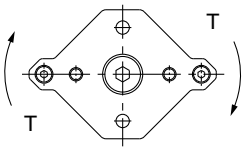

Unit: N·m

Bore size (mm)	Cylinder stroke (mm)											
	5	10	15	20	25	30	35	40	45	50	75	100
12	0.11	0.10	0.08	0.07	0.07	0.06	—	—	—	—	—	—
16	0.15	0.12	0.11	0.10	0.09	0.08	—	—	—	—	—	—
20	0.37	0.32	0.28	0.25	0.23	0.21	0.19	0.18	0.17	0.16	—	—
25	0.40	0.35	0.31	0.28	0.25	0.23	0.21	0.20	0.18	0.17	—	—
32	0.66	0.59	0.53	0.49	0.45	0.42	0.39	0.36	0.34	0.32	0.25	0.20
40	1.06	0.96	0.88	0.81	0.75	0.70	0.65	0.61	0.58	0.55	0.43	0.36
50	—	1.70	1.56	1.45	1.35	1.26	1.19	1.12	1.06	1.01	0.80	0.67
63	—	3.90	3.62	3.37	3.15	2.96	2.80	2.65	2.51	2.39	1.92	1.61
80	—	7.44	6.98	6.56	6.20	5.87	5.57	5.31	5.07	4.84	3.98	3.37
100	—	11.85	11.19	10.61	10.08	9.60	9.17	8.77	8.41	8.07	6.73	5.77

Plate Allowable Lateral Load

Make sure to operate strictly within the allowable lateral load range to the plate.

Operation outside of this range may result in shorter service life or damage to the devise.

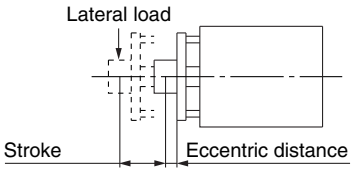

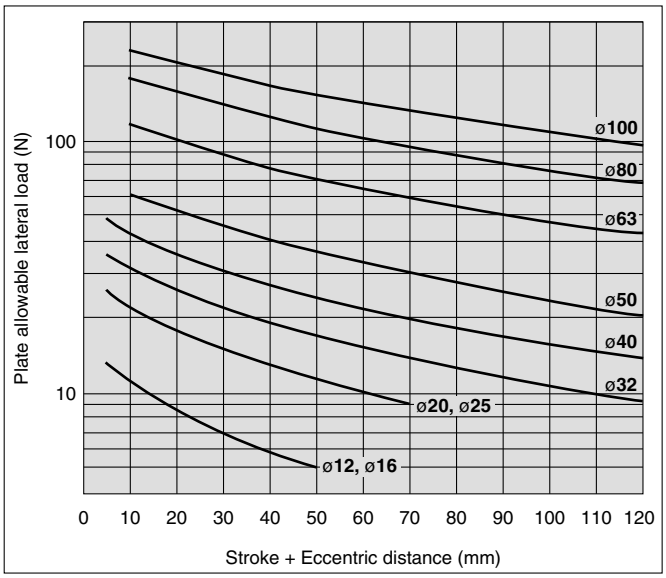

Allowable Kinetic Energy

Make sure to operate strictly within the allowable range of the load mass and maximum speed.

Operation outside of this range may cause excessive impact, which may result in the damage to the devise.

Operating pressure: 0.5 MPa

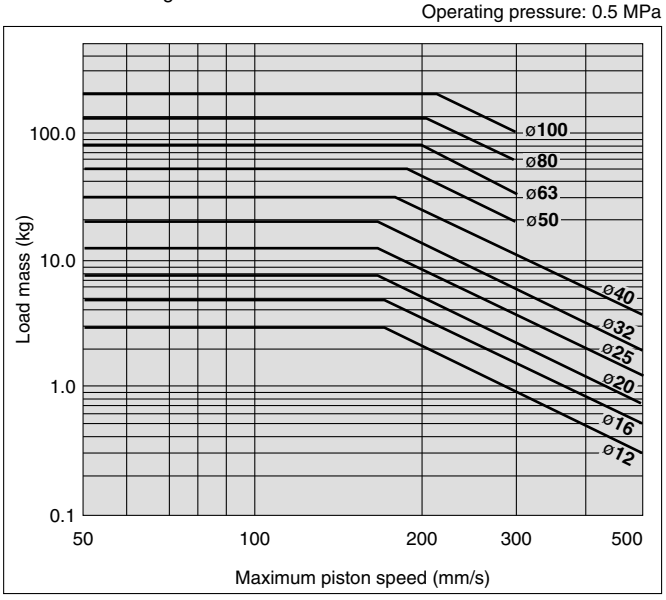

Construction

ø12 to ø25

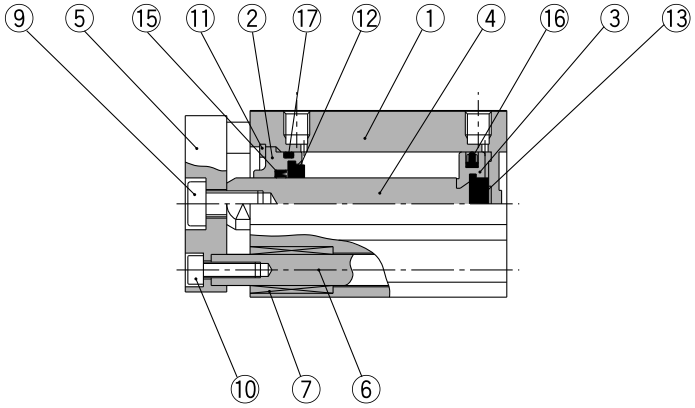

With auto switch (Built-in magnet)

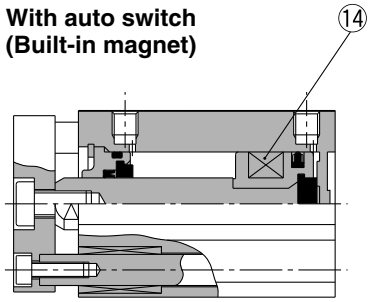

ø32 to ø100

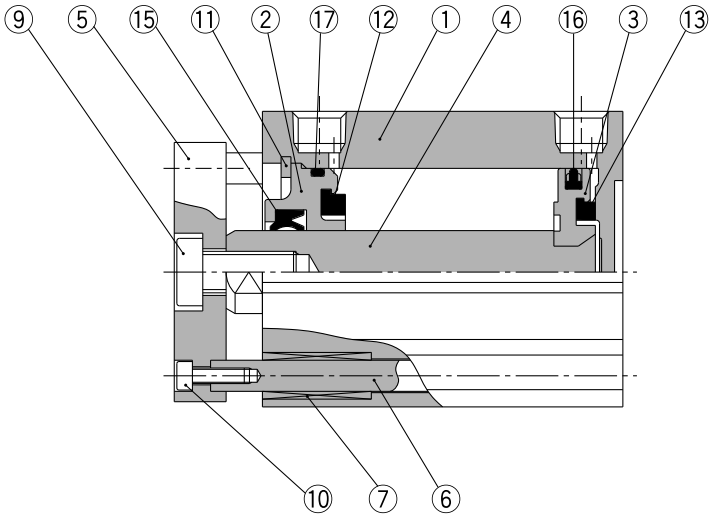

With auto switch (Built-in magnet)

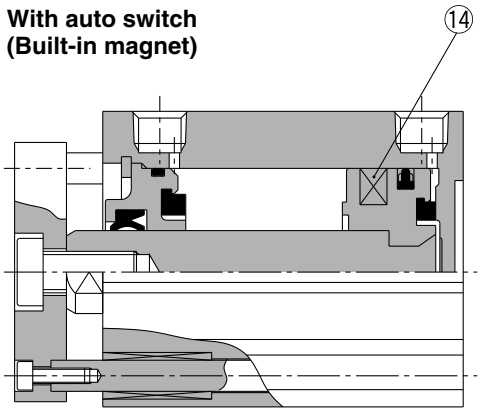

ø50 to ø100

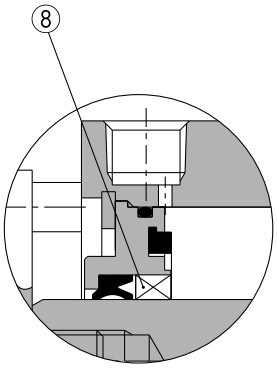

Component Parts

No.	Description	Material	Note
1	**Cylinder tube**	Aluminum alloy	Hard anodized
2	**Collar**	Aluminum alloy	ø12 to ø40 Anodized
		Aluminum alloy casted	ø50 to ø100 Chromated, Coated
3	**Piston**	Aluminum alloy	Chromated
4	**Piston rod**	Stainless steel	ø12 to ø25
		Carbon steel	ø32 to ø100 Hard chrome plated
5	**Plate**	Aluminum alloy	Anodized
6	**Guide rod**	Stainless steel	Hard chrome plated
7	**Bushing**	Oil-impregnated sintered alloy	
8	**Bushing**	Bearing alloy	ø50 to ø100
9	**Hexagon socket head cap screw**	Carbon steel	Nickel plated
10	**Hexagon socket head cap screw**	Carbon steel	Nickel plated
11	**Retaining ring**	Carbon tool steel	Phosphate coated
12	**Bumper A**	Urethan	
13	**Bumper B**	Urethan	
14	**Magnet**	—	
15	**Rod seal**	NBR	
16	**Piston seal**	NBR	
17	**Gasket**	NBR	

Mounting Bolt

Mounting method: Mounting bolt for through-hole style of CQMB is available as an option.

Ordering: Add the word "Bolt" in front of the bolts to be used.

Example) Bolt M3 x 25L 2 pcs.

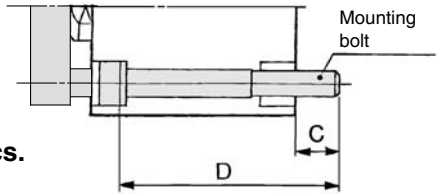

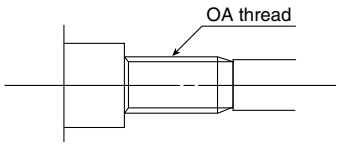

Material: Chromium molybdenum steel
Surface treatment: Nickel plated

Note) To install a cylinder with bore size 12 to 25 mm with through-hole, be sure to use the attached flat washer.

Mounting Bolt for CQM/Without Auto Switch

Cylinder model	C	D	Mounting bolt size
CQMB12- 5	6.5	25	M3 x 25L
-10		30	x 30L
-15		35	x 35L
-20		40	x 40L
-25		45	x 45L
-30		50	x 50L
CQMB16- 5	6.5	25	M3 x 25L
-10		30	x 30L
-15		35	x 35L
-20		40	x 40L
-25		45	x 45L
-30		50	x 50L
CQMB20- 5	6.5	25	M5 x 25L
-10		30	x 30L
-15		35	x 35L
-20		40	x 40L
-25		45	x 45L
-30		50	x 50L
-35		55	x 55L
-40		60	x 60L
-45		65	x 65L
-50		70	x 70L
CQMB25- 5	8.5	30	M5 x 30L
- 10		35	x 35L
- 15		40	x 40L
- 20		45	x 45L
- 25		50	x 50L
- 30		55	x 55L
- 35		60	x 60L
- 40		65	x 65L
- 45		70	x 70L
- 50		75	x 75L

Cylinder model	C	D	Mounting bolt size
CQMB32- 5	9	30	M5 x 30L
- 10		35	x 35L
- 15		40	x 40L
- 20		45	x 45L
- 25		50	x 50L
- 30		55	x 55L
- 35		60	x 60L
- 40		65	x 65L
- 45		70	x 70L
- 50		75	x 75L
- 75		110	x 110L
-100		135	x 135L
CQMB40- 5	7.5	35	M5 x 35L
- 10		40	x 40L
- 15		45	x 45L
- 20		50	x 50L
- 25		55	x 55L
- 30		60	x 60L
- 35		65	x 65L
- 40		70	x 70L
- 45		75	x 75L
- 50		80	x 80L
- 75		115	x 115L
-100		140	x 140L
CQMB50- 10	12.5	45	M6 x 45L
- 15		50	x 50L
- 20		55	x 55L
- 25		60	x 60L
- 30		65	x 65L
- 35		70	x 70L
- 40		75	x 75L
- 45		80	x 80L
- 50		85	x 85L
- 75		120	x 120L
-100		145	x 145L

Cylinder model	C	D	Mounting bolt size
CQMB63- 10	14.5	50	M8 x 50L
- 15		55	x 55L
- 20		60	x 60L
- 25		65	x 65L
- 30		70	x 70L
- 35		75	x 75L
- 40		80	x 80L
- 45		85	x 85L
- 50		90	x 90L
- 75		125	x 125L
-100		150	x 150L
CQMB80- 10	15	55	M10 x 55L
- 15		60	x 60L
- 20		65	x 65L
- 25		70	x 70L
- 30		75	x 75L
- 35		80	x 80L
- 40		85	x 85L
- 45		90	x 90L
- 50		95	x 95L
- 75		130	x 130L
-100		155	x 155L
CQMB100- 10	15.5	65	M10 x 65L
- 15		70	x 70L
- 20		75	x 75L
- 25		80	x 80L
- 30		85	x 85L
- 35		90	x 90L
- 40		95	x 95L
- 45		100	x 100L
- 50		105	x 105L
- 75		140	x 140L
-100		165	x 165L

Mounting Bolt for CDQM/With Auto Switch (Built-in magnet)

Cylinder model	C	D	Mounting bolt size
CDQMB12- 5	6.5	30	M3 x 30L
-10		35	x 35L
-15		40	x 40L
-20		45	x 45L
-25		50	x 50L
-30		55	x 55L
CDQMB16- 5	6.5	30	M3 x 30L
-10		35	x 35L
-15		40	x 40L
-20		45	x 45L
-25		50	x 50L
-30		55	x 55L
CDQMB20- 5	6.5	35	M5 x 35L
-10		40	x 40L
-15		45	x 45L
-20		50	x 50L
-25		55	x 55L
-30		60	x 60L
-35		65	x 65L
-40		70	x 70L
-45		75	x 75L
-50		80	x 80L
CDQMB25- 5	8.5	40	M5 x 40L
-10		45	x 45L
-15		50	x 50L
-20		55	x 55L
-25		60	x 60L
-30		65	x 65L
-35		70	x 70L
-40		75	x 75L
-45		80	x 80L
-50		85	x 85L

Cylinder model	C	D	Mounting bolt size
CDQMB32- 5	9	40	M5 x 40L
- 10		45	x 45L
- 15		50	x 50L
- 20		55	x 55L
- 25		60	x 60L
- 30		65	x 65L
- 35		70	x 70L
- 40		75	x 75L
- 45		80	x 80L
- 50		85	x 85L
- 75		110	x 110L
-100		135	x 135L
CDQMB40- 5	7.5	45	M5 x 45L
- 10		50	x 50L
- 15		55	x 55L
- 20		60	x 60L
- 25		65	x 65L
- 30		70	x 70L
- 35		75	x 75L
- 40		80	x 80L
- 45		85	x 85L
- 50		90	x 90L
- 75		115	x 115L
-100		140	x 140L
CDQMB50- 10	12.5	55	M6 x 55L
- 15		60	x 60L
- 20		65	x 65L
- 25		70	x 70L
- 30		75	x 75L
- 35		80	x 80L
- 40		85	x 85L
- 45		90	x 90L
- 50		95	x 95L
- 75		120	x 120L
-100		145	x 145L

Cylinder model	C	D	Mounting bolt size
CDQMB63- 10	14.5	60	M8 x 60L
- 15		65	x 65L
- 20		70	x 70L
- 25		75	x 75L
- 30		80	x 80L
- 35		85	x 85L
- 40		90	x 90L
- 45		95	x 95L
- 50		100	x 100L
- 75		125	x 125L
-100		150	x 150L
CDQMB80- 10	15	65	M10 x 65L
- 15		70	x 70L
- 20		75	x 75L
- 25		80	x 80L
- 30		85	x 85L
- 35		90	x 90L
- 40		95	x 95L
- 45		100	x 100L
- 50		105	x 105L
- 75		130	x 130L
-100		155	x 155L
CDQMB100- 10	15.5	75	M10 x 75L
- 15		80	x 80L
- 20		85	x 85L
- 25		90	x 90L
- 30		95	x 95L
- 35		100	x 100L
- 40		105	x 105L
- 45		110	x 110L
- 50		115	x 115L
- 75		140	x 140L
-100		165	x 165L

Dimensions

ø12 to ø25

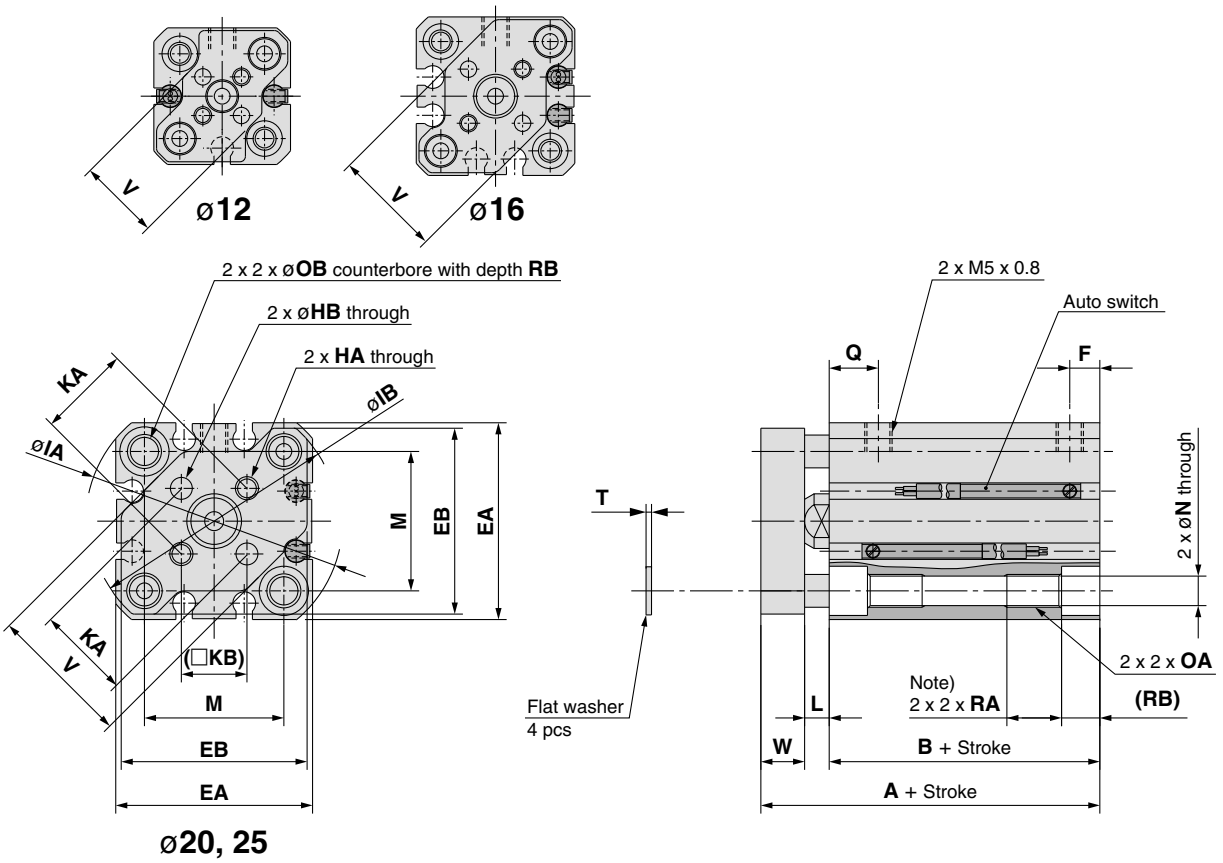

(mm)

Bore size (mm)	Stroke range (mm)	Without auto switch		With auto switch		EA	EB	F	HA	OA	HB	IA	IB
		A	B	A	B								
12	5 to 30	26.5	17	31.5	22	25	24	5	M3 x 0.5	M4 x 0.7	$3^{+0.2}_{0}$	32	31.5
16	5 to 30	26.5	17	31.5	22	29	28	5	M3 x 0.5	M4 x 0.7	$3^{+0.2}_{0}$	38	37
20	5 to 50	32	19.5	42	29.5	36	34	5.5	M4 x 0.7	M6 x 1.0	$4^{+0.2}_{0}$	47	45.5
25	5 to 50	35.5	22.5	45.5	32.5	40	38	5.5	M5 x 0.8	M6 x 1.0	$5^{+0.2}_{0}$	52	50.5

Bore size (mm)	KA	KB	L	M	N	OB	Q	RA	RB	T	V	W
12	10 ± 0.1	7.1	3.5	15.5	3.5	6.5	7.5	7	4	0.5	14.9	6
16	14 ± 0.1	9.9	3.5	20	3.5	6.5	7.5	7	4	0.5	20	6
20	17 ± 0.1	12	4.5	25.5	5.4	9	9	10	7	1	26	8
25	22 ± 0.1	15.6	5	28	5.4	9	11	10	7	1	30	8

Note) For the following bore/stroke sizes, the through-hole is threaded.
Standard without auto switch: ø12 and ø16; 5 stroke, ø20; 5 to 15 stroke, ø25; 5 and 10 stroke,
Built-in magnet with auto switch: ø20; 5 stroke

Dimensions

ø32 to ø50

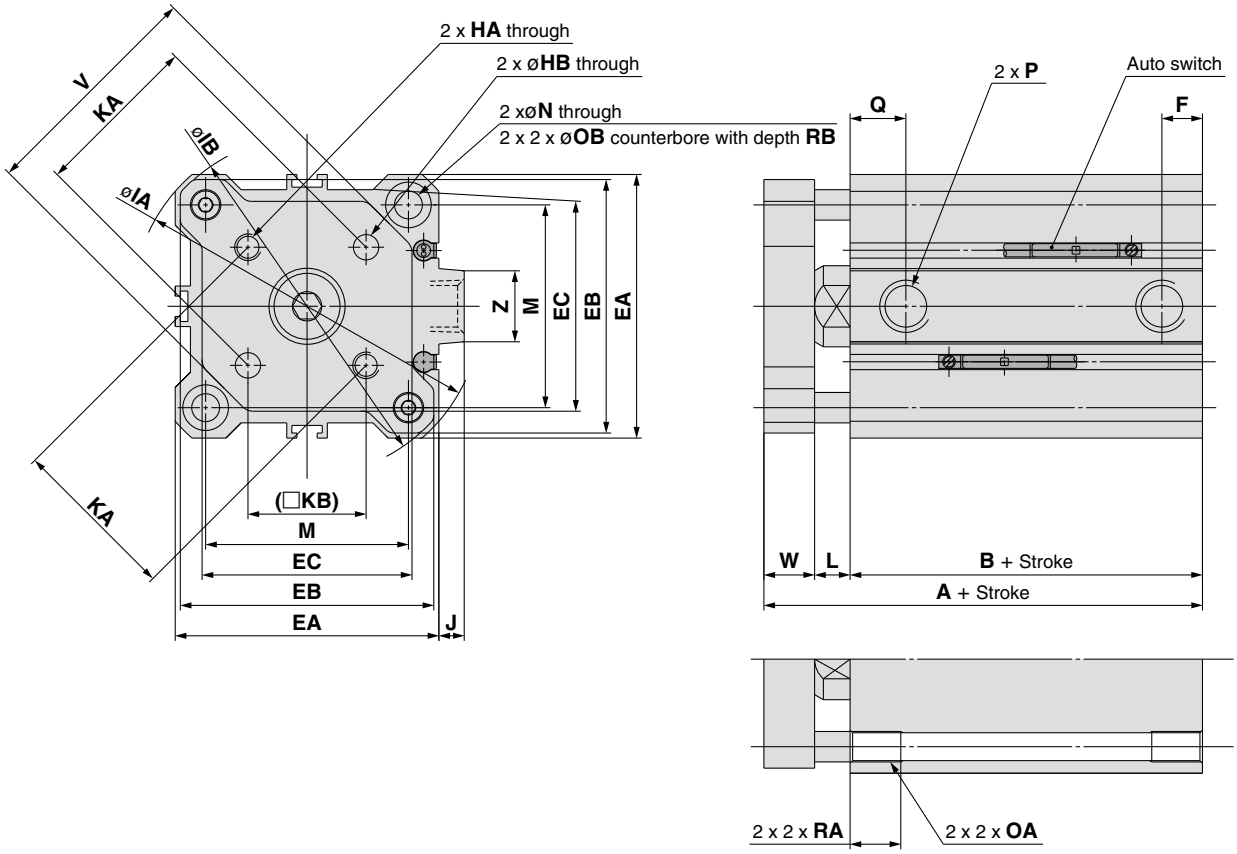

Both ends tapped (CQMA)

(mm)

Bore size (mm)	Stroke range (mm)	Without auto switch							With auto switch							EA	EB	EC
		A	B	F	Q	P			A	B	F	Q	P					
						—	TN	TF					—	TN	TF			
32	5	40	23	5.5	11.5	M5 x 0.8	—	—	50	33	7.5	10.5	Rc 1/8	NPT 1/8	G 1/8	45	43	34.4
	10 to 50			7.5	10.5	Rc 1/8	NPT 1/8	G 1/8										
	75, 100	50	33															
40	5 to 50	46.5	29.5	8	11	Rc 1/8	NPT 1/8	G 1/8	56.5	39.5	8	11	Rc 1/8	NPT 1/8	G 1/8	52	50	41.4
	75, 100	56.5	39.5															
50	10 to 50	50.5	30.5	10.5	10.5	Rc 1/4	NPT 1/4	G 1/4	60.5	40.5	10.5	10.5	Rc 1/4	NPT 1/4	G 1/4	64	62	53.4
	75, 100	60.5	40.5															

Bore size (mm)	HA	OA	HB	IA	IB	J	KA	KB	L	M	N	OB	RA	RB	V	W	Z
32	M5 x 0.8	M6 x 1.0	$5^{+0.2}_{0}$	60	58.5	4.5	28 ± 0.2	19.8	7	34	5.5	9	10	7	38	10	14
40	M5 x 0.8	M6 x 1.0	$5^{+0.2}_{0}$	69	67.5	5	33 ± 0.2	23.3	7	40	5.5	9	10	7	46	10	14
50	M6 x 1.0	M8 x 1.25	$6^{+0.2}_{0}$	86	84.5	7	42 ± 0.2	29.7	8	50	6.6	11	14	8	58	12	19

Dimensions

ø63 to ø100

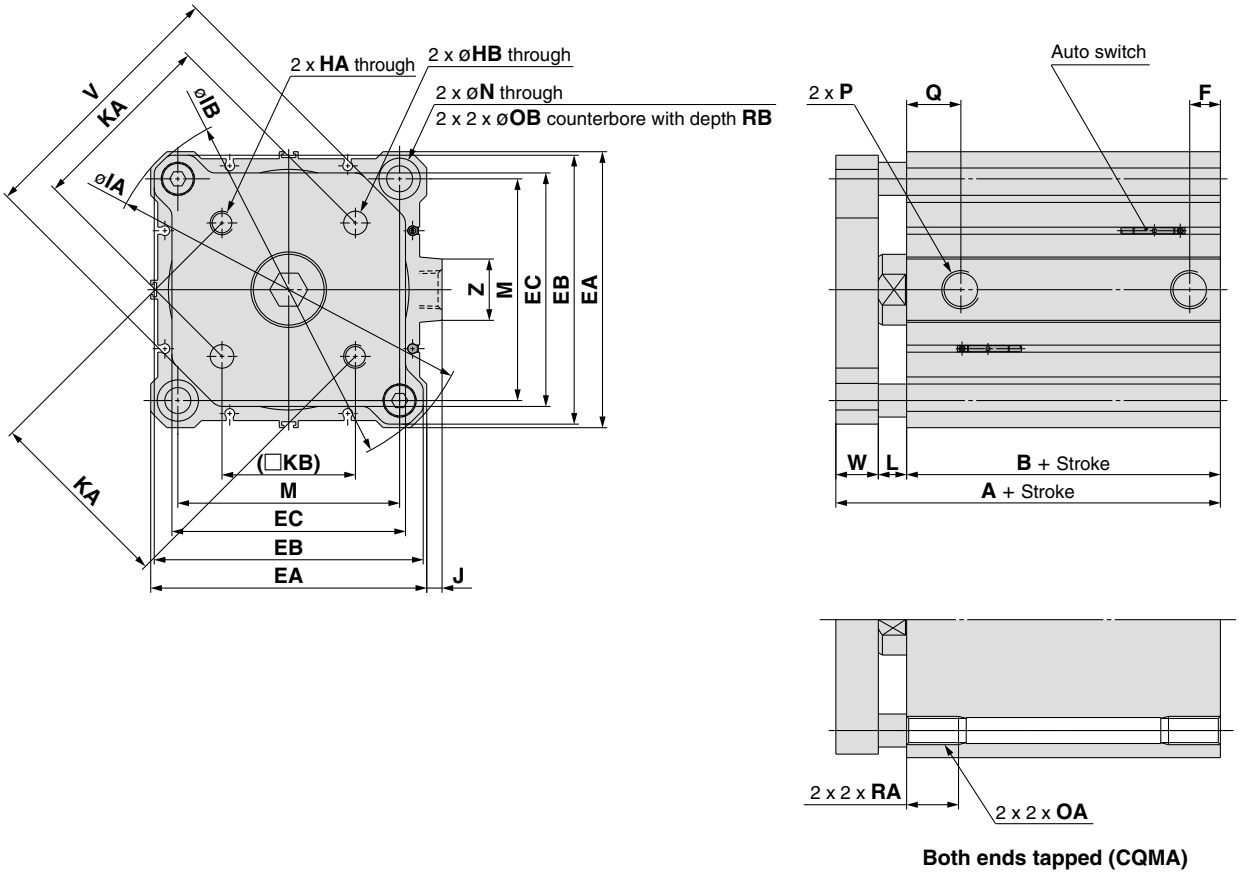

Both ends tapped (CQMA)

(mm)

Bore size (mm)	Stroke range (mm)	Without auto switch		With auto switch		EA	EB	EC	F	HA	HB	IA	IB	J	KA	KB	L	M
		A	B	A	B													
63	10 to 50	56	36	66	46	77	74	59.6	10.5	M6 x 1	6 $^{+0.2}_{0}$	103	100	7	50 ± 0.2	35.4	8	60
	75, 100	66	46															
80	10 to 50	67.5	43.5	77.5	53.5	98	95	79.5	12.5	M8 x 1.25	8 $^{+0.2}_{0}$	132	129	6	65 ± 0.2	46	10	77
	75, 100	77.5	53.5															
100	10 to 50	79	53	89	63	117	114	99	13	M10 x 1.5	10 $^{+0.2}_{0}$	156	153	6.5	80 ± 0.2	56.6	10	94
	75, 100	89	63															

Bore size (mm)	N	OA	OB	P			Q	RA	RB	V	W	Z
				—	TN	TF						
63	9	M10 x 1.5	14	Rc 1/4	NPT 1/4	G 1/4	15	18	10.5	69	12	19
80	11	M12 x 1.75	17.5	Rc 3/8	NPT 3/8	G 3/8	16	22	13.5	89	14	26
100	11	M12 x 1.75	17.5	Rc 3/8	NPT 3/8	G 3/8	23	22	13.5	113	16	26

Minimum Auto Switch Mounting Stroke

(mm)

Bore size (mm)	Auto switch No. of auto switch mounted / model	D-M9□V	D-A9□V	D-A9□	D-M9□WV D-M9□AVL	D-M9□	D-M9□W D-M9□AL	D-F7□V D-J79C	D-A7□ D-A8□ D-A73C D-A80C	D-F7□WV D-F7BAVL	D-A7□H D-A80H D-F7□ D-J79	D-A79W	D-F7□W D-J79W D-F7BAL D-F7NTL D-F79F	D-P4DW*
12, 16, 20, 25	1 pc.	5	5	10	10	15	15	—	—	—	—	—	—	—
	2 pcs.	5	10	10	10	15	15	—	—	—	—	—	—	—
32, 40, 50, 63, 80, 100	1 pc.	5	5	10	10	10	15	5	5	10	15	15	20	15
	2 pcs.	5	10	10	15	10	15	5	10	15	15	20	20	15

∗ D-P4DWL type is compatible with bore sizes ø40 to ø100.

Proper Auto Switch Mounting Position (Detection at stroke end) and Its Mounting Height

D-A9□
D-M9□

D-M9□W
D-M9□AL

D-A9□V
D-M9□V
D-M9□WV
D-M9□AVL

ø12

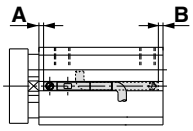

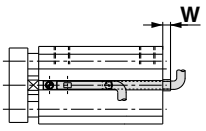

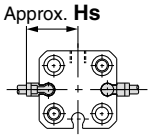

ø16, 20, 25

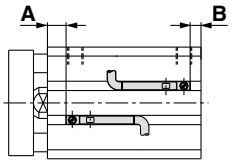

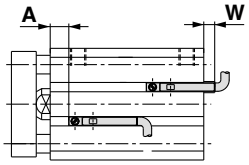

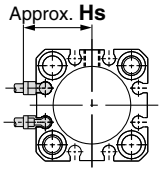

ø32 to ø100

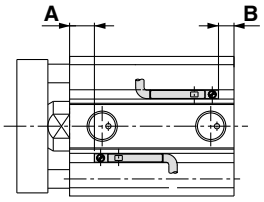

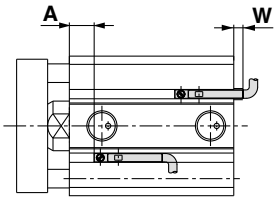

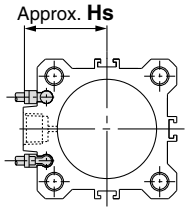

Proper Auto Switch Mounting Positions

(mm)

Bore size \ Auto switch model	D-A9□ D-A9□V			D-M9□ D-M9□V D-M9□W D-M9□WV			D-M9□AL D-M9□AVL		
	A	B	W	A	B	W	A	B	W
12	1.5	0.5	1.5 (4)	5.5	4.5	5.5	5.5	4.5	7.5
16	2	0	2 (4.5)	6	4	6	6	4	8
20	6	3.5	–1.5 (1)	10	7.5	2.5	10	7.5	4.5
25	7	5.5	–3.5 (–1)	11	9.5	0.5	11	9.5	2.5
32	8	5	–3 (–0.5)	12	9	1	12	9	3
40	12	7.5	–5.5 (–3)	16	11.5	–1.5	16	11.5	0.5
50	10	10.5	–8.5 (–6)	14	14.5	–4.5	14	14.5	–2.5
63	12.5	13.5	–11.5 (–9)	16.5	17.5	–7.5	16.5	17.5	–5.5
80	15.5	18	–16 (–13.5)	19.5	22	–12	19.5	22	–10
100	20	23	–21 (–18.5)	24	27	–17	24	27	–15

Auto Switch Mounting Height

(mm)

Bore size \ Auto switch model	D-A9□V	D-M9□V D-M9□WV D-M9□AVL
	Hs	Hs
12	17	19
16	19	21
20	22.5	24
25	24.5	26
32	27	29
40	30.5	32.5
50	36.5	42
63	40	42
80	50	52
100	60	62

Note 1) ( ): For D-A93 type
Note 2) W is used for mounting D-A9□, D-M9□, D-M9□W and D-M9□AL types.
Note 3) Negative figures for W in the table indicate that an auto switch is mounted inward from the edge of the cylinder body.
Note 4) Adjust the auto switch after confirming the operating condition in the actual setting.

Proper Auto Switch Mounting Position (Detection at stroke end) and Its Mounting Height

D-A7□
D-A80
D-A73C
D-A80C
D-A79W

D-F7□V
D-J79C
D-F7□WV
D-F7BAVL

D-A7□H
D-A80H

D-F7□
D-J79
D-F7□W
D-J79W
D-F7BAL
D-F79F
D-F7NTL

ø32 to ø100

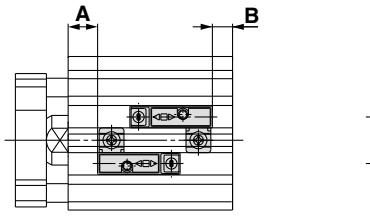

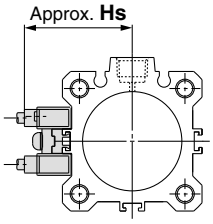

D-P4DW

ø40 to ø100

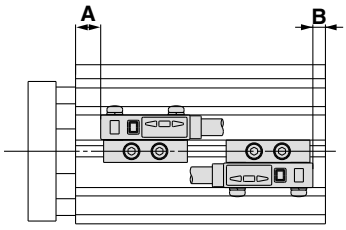

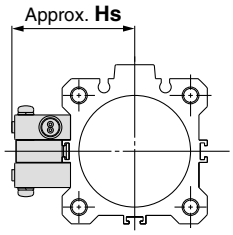

Proper Auto Switch Mounting Position

(mm)

Auto switch model / Bore size	D-A73 D-A80		D-A72/A7□H/A80H D-A73C/A80C/F7□ D-J79/F7□W/J79W D-F7□V/F7□WV D-F79F/J79C D-F7BAL/F7BAVL		D-F7NTL		D-A79W		D-P4DWL	
	A	B	A	B	A	B	A	B	A	B
32	9	6	9.5	6.5	14.5	11.5	6.5	3.5	—	—
40	13	8.5	13.5	9	18.5	14	10.5	6	9	4.5
50	11	11.5	11.5	12	16.5	17	12	8.5	7	7.5
63	13	14.5	14	15	15	16	11	12	9.5	10.5
80	17	18	18	18.5	19	19.5	15	15.5	13.5	14
100	21	24	21.5	24.5	22.5	25.5	18.5	21.5	17	20

∗ D-P4DWL type is compatible with bore sizes ø40 to ø100.
Note) Adjust the auto switch after confirming the operating condition in the actual setting.

Auto Switch Mounting Height

(mm)

Auto switch model / Bore size	D-A7□ D-A80	D-A7□H/A80H D-F7□/J79/F7□W D-J79W/F79F D-F7BAL/F7NTL	D-A73C D-A80C	D-A79W	D-F7□V D-F7□WV D-F7BAVL	D-J79C	D-P4DWL
	Hs	Hs	Hs	Hs	Hs	Hs	Hs
32	31.5	32.5	38.5	34	35	38	—
40	35	36	42	37.5	38.5	41.5	44
50	41	42	48	43.5	44.5	47.5	50
63	47.5	48.5	54.5	50	51	54	56.5
80	57.5	58.5	64.5	60	61	64	66.5
100	67.5	68.5	74.5	70	71	74	76.5

∗ D-P4DWL type is compatible with bore sizes ø40 to ø100.

Operating Range

(mm)

Auto switch model	Bore size									
	12	16	20	25	32	40	50	63	80	100
D-A9□/A9□V	6	7.5	10	10	9.5	9.5	9.5	11.5	9	11.5
D-M9□/M9□V D-M9□W/M9□WV D-M9□AL/M9□AVL	3	4	5.5	5.5	6	6	7	7.5	8	8.5
D-A7□/A80	—	—	—	—	12	11	10	12	12	13
D-A79W	—	—	—	—	13	14	14	16	15	17
D-F7□/F7□V D-J79/J79C D-F7□W/F7□WV D-J79W D-F7BAL/F7BAVL D-F7NTL/F79F	—	—	—	—	6	6	6	6.5	6.5	7
D-P4DWL	—	—	—	—	—	5	5	5	5	5.5

∗ Since the operating range is provided as a guideline including hysteresis, it cannot be guaranteed (assuming approximately ±30% dispersion). It may vary substantially depending on an ambient environment.
∗ Auto switch mounting brackets BQ2-012 are not used for sizes over ø32 of D-A9□(V)/M9□(V)/M9□W(V)/M9□A(V)L types. The above values indicate the operating range when mounted with the conventional auto switch installation groove.

Auto Switch Mounting Bracket: Part No.

Auto switch mounting surface / Auto switch model	Bore size (mm)			
	ø12	**ø16, ø20, ø25**	**ø32, ø40, ø50**	**ø63, ø80, ø100**
	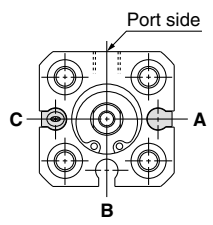	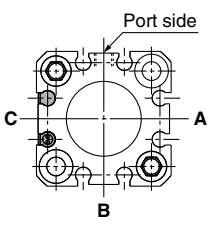	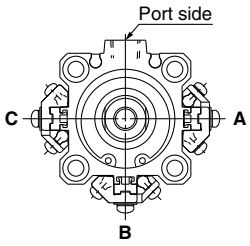	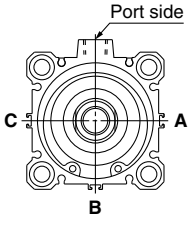
	Auto switch mounting surface	Auto switch mounting surface	Auto switch mounting surface	Auto switch mounting surface
Auto switch model	A, B, C sides	Port, A, B, C sides	Port side	A, B, C sides	Port, A, B, C sides
D-A9□ **D-A9□V** **D-M9□** **D-M9□V** **D-M9□W** **D-M9□WV** **D-M9□AL** **D-M9□AVL**	Auto switch mounting bracket not required.	Auto switch mounting bracket not required.	Auto switch mounting bracket not required.	① BQ-2 ② BQ2-012 2 kinds of auto switch mounting brackets are used as a set. 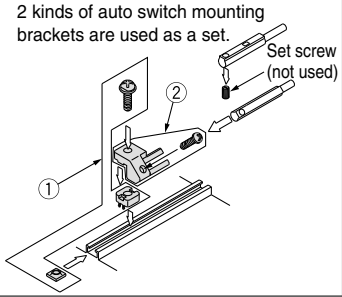	Auto switch mounting bracket not required.

Note 1) For each cylinder series, when a compact auto switch is mounted on the three sides (A, B and C above) other than the port side of bore sizes ø32 to ø50, the auto switch mounting brackets above are required. Order them separately from cylinders.
Order example
CDQMB32-50-M9BW……1
BQ-2……2 pcs.
BQ2-012……2 pcs.

Note 2) When shipping cylinders, auto switch mounting brackets and auto switches are shipped together.

Auto switch model	Bore size (mm)					
	32	**40**	**50**	**63**	**80**	**100**
D-A7□/A80 **D-A73C/A80C** **D-A7□H/A80H** **D-A79W** **D-F7□/J79** **D-F7□V** **D-J79C** **D-F7□W/J79W** **D-F7□WV** **D-F7BAL/F7BAVL** **D-F79F/F7NTL**	BQ-2					
D-P4DWL	—	BQP1-050				

Note 3) Auto switch mounting brackets and auto switches are included when the cylinder is shipped. For only ø40 to ø100 with D-P4DWL, they are assembled at the time of shipment.

[Mounting screw set made of stainless steel]

The following set of mounting screws made of stainless steel (including nuts) is available. Use it in accordance with the operating environment. (Please order BQ-2 separately, since auto switch spacers (for BQ-2) are not included.)
BBA2: For D-A7/A8/F7/J7 types

D-F7BAL/F7BAVL auto switches are mounted on the cylinder with the stainless steel screws above when shipped. When an auto switch is shipped independently, BBA2 is attached.

Note 4) Refer to page 1361 for the details of BBA2 screws.

Note 5) When D-M9□A(V)L type is mounted on a side other than ø32, ø40 and ø50 port sides, order auto switch mounting brackets BQ2-012S and BQ-2, and a stainless steel screw set BBA2.

Auto Switch Mounting Bracket Mass

Mounting bracket part no.	Mass (g)
BQ-2	1.5
BQ2-012	5
BQP1-050	16

Other Applicable Auto Switches/Refer to pages 1263 to 1371 for further information on auto switches.

Type	Model	Electrical entry (Fetching direction)	Features
Reed auto switch	D-A73	Grommet (perpendicular)	—
	D-A80		Without indicator light
	D-A73H, A76H	Grommet (in-line)	—
	D-A80H		Without indicator light
Solid state auto switch	D-F7NV, F7PV, F7BV	Grommet (perpendicular)	—
	D-F7NWV, F7BWV		Diagnostic indication (2-color indication)
	D-F7BAVL	Grommet (in-line)	Water resistance (2-color indication)
	D-F79, F7P, J79		—
	D-F79W, F7PW, J79W		Diagnostic indication (2-color indication)
	D-F7BAL		Water resistance (2-color indication)
	D-F7NTL		With timer
	D-P5DWL		Magnetic field resistant (2-color indication)

∗ For solid state auto switches, auto switches with a pre-wired connector are also available. Refer to pages 1328 and 1329 for details.
∗ Normally closed (NC = b contact) solid state auto switches (D-F9G/F9H types) are also available. Refer to page 1290 for details.
∗ D-A7/A8/F7/J7 types cannot be mounted on ø12 to ø25.

The number of surfaces and grooves where an auto switch can be mounted (as direct mounting).

The number of the surfaces and grooves where the auto switch can be mounted, by switch type, are shown in the table below.

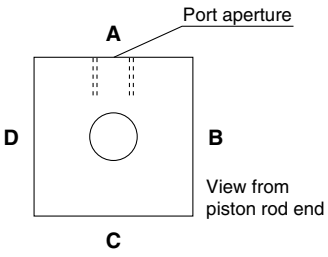

Switch type	D-A9□(V), M9□(V), M9□W(V), M9□A(V)L				D-A7□, A8□, F7□, J7□			
Bore size (mm)	A (Mounting groove no.)	B (Mounting groove no.)	C (Mounting groove no.)	D (Mounting groove no.)	A (Mounting groove no.)	B (Mounting groove no.)	C (Mounting groove no.)	D (Mounting groove no.)
12	–	○ (1)	○ (1)	○ (1)	–	–	–	–
16	–	○ (2)	○ (2)	○ (2)	–	–	–	–
20	○ (2)	○ (2)	○ (2)	○ (2)	–	–	–	–
25	○ (2)	○ (2)	○ (2)	○ (2)	–	–	–	–
32	○ (2)	–	–	–	–	○	○	○
40	○ (2)	–	–	–	–	○	○	○
50	○ (2)	–	–	–	–	○	○	○
63	○ (2)	○ (2)	○ (2)	○ (2)	–	○	○	○
80	○ (2)	○ (2)	○ (2)	○ (2)	–	○	○	○
100	○ (2)	○ (2)	○ (2)	○ (2)	–	○	○	○

Series CQM
Specific Product Precautions

Be sure to read before handling.
Refer to front matters 54 and 55 for Safety Instructions and pages 3 to 11 for Actuator and Auto Switch Precautions.

Mounting

⚠ Warning

1. Do not put hands or fingers between the plate and cylinder tubing.

Never put hands or fingers in the gap between the plate and cylinder tubing when the piston rods are retracted. Due to the heavy power output of the cylinder, failure to comply with this directive may result in trapping and subsequent injury to the human body.

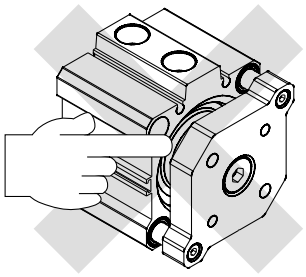

⚠ Caution

1. Do not scratch or dent the sliding parts of the piston rod and guide rods.

Damage to seals may cause air leakage or faulty operation.

2. Mounting of work piece

When screwing a bolt onto the threaded portion of the plate surface, be certain that the guide rods are fully extended to the end.

Also, be careful that the tightening torque is not applied to the guide rods.

3. Make sure that the cylinder mounting surface has a flatness of 0.02 mm or less.

When mounting the cylinder body or workpieces on the plate, improper flatness of the mounting surface may cause malfunctions.

When the flatness of a workpiece is not sufficient, attaching a shim such as a flat washer, etc., at the place of a mounting bolt between the workpiece and the plate may reduce the affect on the operation.

Others

⚠ Caution

1. This product should not be used as a stopper.

2. Do not disassemble and modify the product.

3. For example, in a pressing application, the cylinder thrust is directly applied to the plate, therefore, make sure that the pressing force is applied to the plate directly on the extended axial line of a rod. (Below figures.)

