Electric Actuator
LEF Series

Click here for details. Click here for details.

RoHS

Slider Type

Step Motor (Servo/24 VDC) **Servo Motor** (24 VDC)

Ball Screw Drive *LEFS Series*

Size: 16, 25, 32, 40 ▸p. 31

Max. work load: 65 kg **Max. speed: 1200 mm/s**
Positioning repeatability: ±0.015 mm (High-precision type)
Clean room specification also available

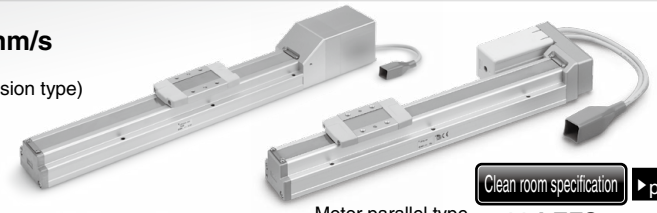

Clean room specification ▸p. 31

Motor parallel type **11-LEFS**

Belt Drive *LEFB Series*

Size: 16, 25, 32 ▸p. 31

Max. stroke: 2000 mm
Max. speed: 2000 mm/s

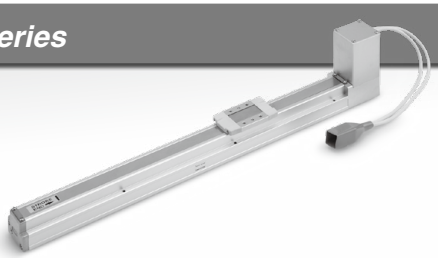

AC Servo Motor

Ball Screw Drive *LEFS Series*

Size: 25, 32, 40 ▸p. 39, 47

Positioning repeatability: ±0.01 mm (High-precision type)
Improved high-speed transfer ability **Max. speed: 1500 mm/s**
High acceleration/deceleration: 20000 mm/s²
Pulse input type
With internal absolute encoder (For the LECSB/C/S)
Clean room specification also available



Clean room specification ▸p. 39, 47

Motor parallel type **11-LEFS**

Belt Drive *LEFB Series*

Size: 25, 32, 40 ▸p. 49

Max. speed: 2000 mm/s
Max. stroke: 3000 mm
Max. acceleration/deceleration: 20000 mm/s²
Motor bottom mounting type also available

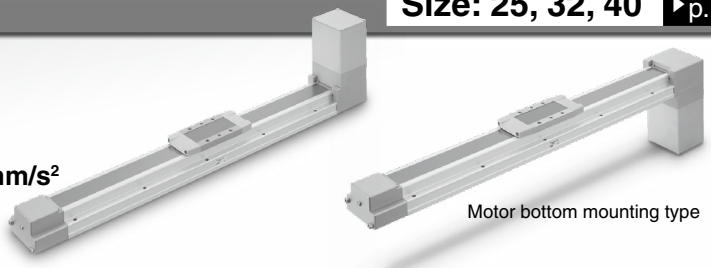

Motor bottom mounting type

Step Motor (Servo/24 VDC) **Servo Motor** (24 VDC) **Controllers/Drivers** ▸p. 684

- **Step data input type**
  JXC51/61/LECA6 Series (64 positioning points)
- **EtherCAT®/EtherNet/IP™/PROFINET/DeviceNet™/IO-Link/CC-Link direct input type**
  JXCE1/91/P1/D1/L1/M1 Series
- **Programless type**
  LECP1 Series (14 positioning points)
- **Pulse input type**
  LECPA Series



The LECSB-S, LECSC-S, and LECSS-S electric actuator drivers are to be discontinued. Please select one of the substitute drivers ending with a "-T" instead: the LECSB-T, LECSC-T, and LECSS-T.

AC Servo Motor **Drivers** ▸p. 764

▸ For absolute encoders

- **Pulse input type**
  LECSB(-T) Series
- **CC-Link direct input type**
  LECSC(-T) Series
- **SSCNETⅢ type**
  LECSS Series
- **SSCNETⅢ/H type**
  LECSS-T Series
- **Network card type**
  LECSN-T Series
- **MECHATROLINK type**
  LECY□ Series



▸ For incremental encoders

- **Pulse input type/Positioning type**
  LECSA Series



●Easy mounting of the body/Reduction in installation labor

It is possible to mount the main body without removing the external cover, etc.

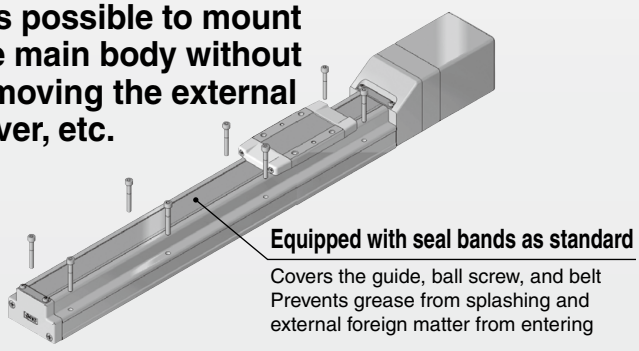

Equipped with seal bands as standard

Covers the guide, ball screw, and belt
Prevents grease from splashing and external foreign matter from entering

●The auto switch can be used to detect the position of the table.

●Up to 2 auto switches can be mounted on each side of the body.

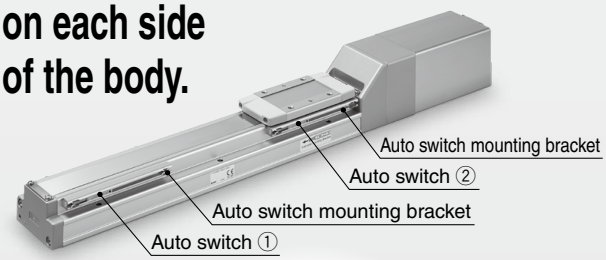

Step Motor (Servo/24 VDC) **Servo Motor** (24 VDC)

Ball Screw Drive/*LEFS Series* Size: 16, 25, 32, 40

Model	Lead [mm]			Max. speed [mm/s]*1
				Step motor (Servo/24 VDC)
LEFS16	—	10	5	700 (For 10 mm lead)
LEFS25	**20**	12	6	1100 (For 20 mm lead)
LEFS32	**24**	16	8	1200 (For 24 mm lead)
LEFS40	**30**	20	10	1200 (For 30 mm lead)

*1 Excludes the LECPA

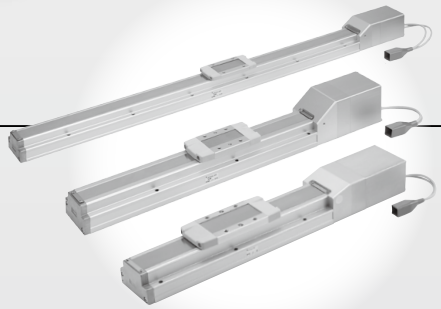

Max. work load: 65 kg

Positioning repeatability: ±0.02 mm

(±0.015 mm for the LEFSH)

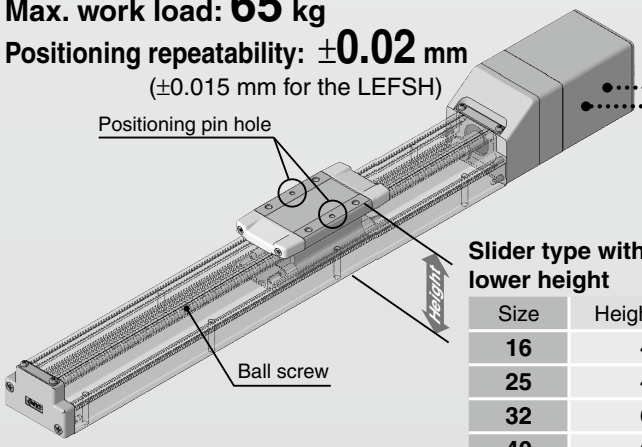

Slider type with lower height

Size	Height [mm]
16	40
25	48
32	60
40	68

Motor parallel type available!

◎Motor mounting position can be selected from two directions (Right or Left).

◎The top surface of the table and motor are level.

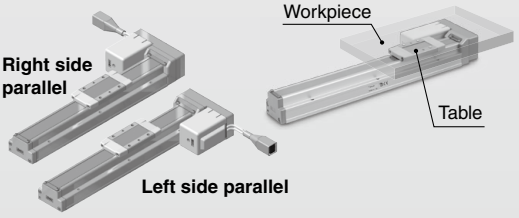

Non-magnetizing lock mechanism (Option)

For drop prevention in the case of a power failure (Maintained)*1

*1 The LEFB belt drive actuator cannot be used for vertical applications.

Compatible motors

●**Step motor (Servo/24 VDC)**
Ideal for the low-speed transfer of heavy loads

●**Servo motor (24 VDC)**
Stable at high speeds
Silent operation

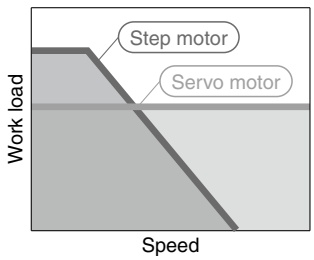

Slider type with lower height

Belt Drive/*LEFB Series* Size: 16, 25, 32

Max. stroke: 2000 mm

Max. speed: 2000 mm/s

SMC

AC Servo Motor

Ball Screw Drive/*LEFS Series* Size: 25, 32, 40

Model	Lead [mm]			Max. speed [mm/s]
				AC servo motor
LEFS25	**20**	12	6	1500
LEFS32	**24**	16	8	1500
LEFS40	**30**	20	10	1500

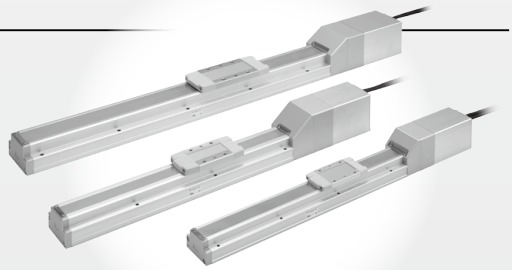

High-output motor (100/200/400 W)
Improved high-speed transfer ability
High acceleration/deceleration
compatible: 20000 mm/s²
Pulse input type
With internal absolute encoder
(For the LECSB/C/S and LECY)

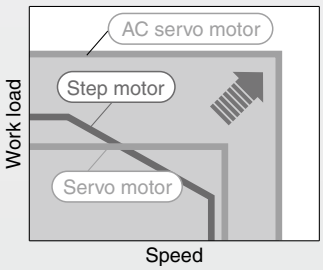

Motor parallel type available!

◎Motor mounting position can be selected from two directions (Right or Left).

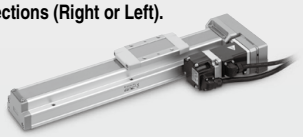

Belt Drive/*LEFB Series* Size: 25, 32, 40

Max. speed: 2000 mm/s
Max. stroke: 3000 mm
Max. acceleration/deceleration: 20000 mm/s²

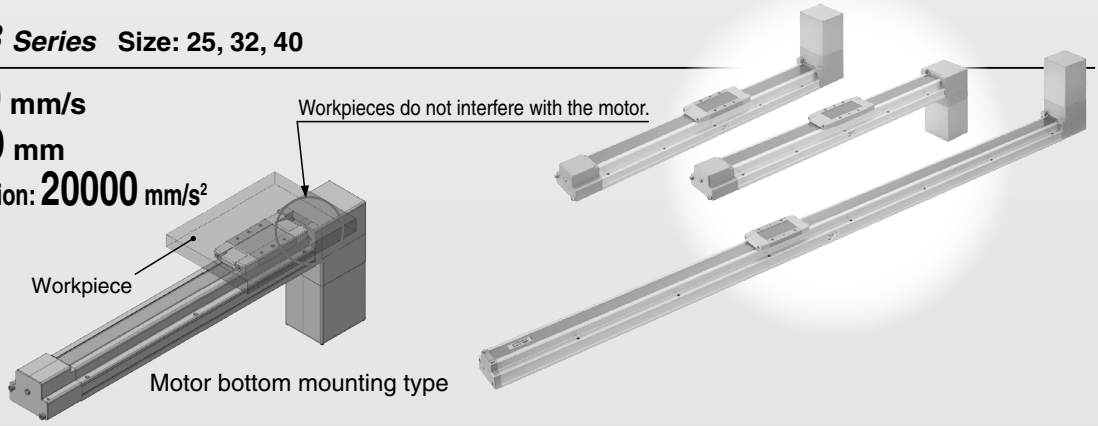

Clean Room Specification

Ball Screw Drive/*11-LEFS Series*

ISO Class 4*1 (ISO 14644-1)

- Built-in vacuum piping
- It is possible to mount the main body without removing the external cover, etc.
- Body-integrated linear guide specification

*1 Changes depending on the suction flow rate
Refer to pages 633 and 634 for details.

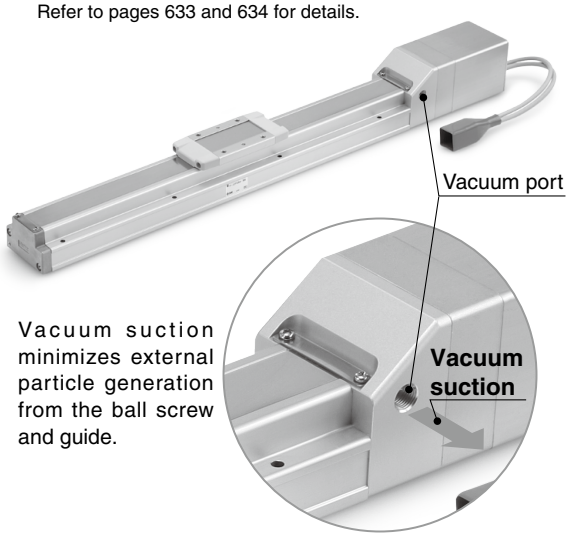

Vacuum suction minimizes external particle generation from the ball screw and guide.

Support Guide/*LEFG Series*

The support guide was designed to support workpieces with significant overhang.

- As the dimensions are the same as the LEF series body, installation is simple and contributes to a reduction in installation and assembly labor.
- The standard-equipped seal bands prevent grease from splashing and external foreign matter from entering.

Application example

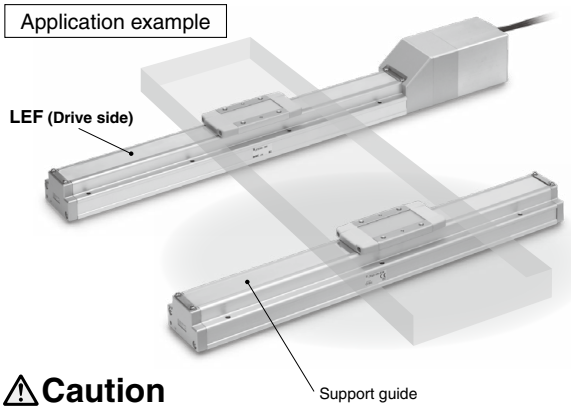

⚠Caution

After installing the actuator on the drive side, align it with the support guide. If the mounting flatness exceeds 0.1, install a floating mechanism separately on the workpiece installation surface (table).

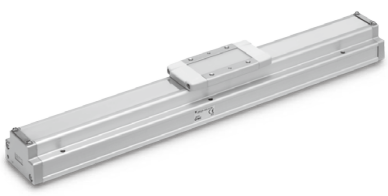

For details, refer to page 54.

Application Examples

For precise positioning of workpieces

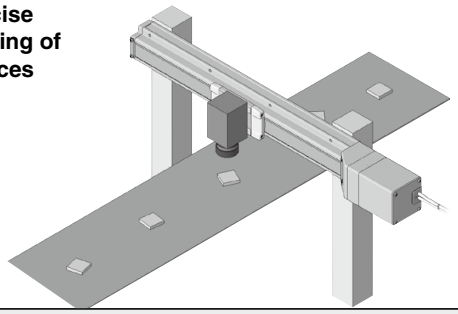

For load and unload transfer of workpieces

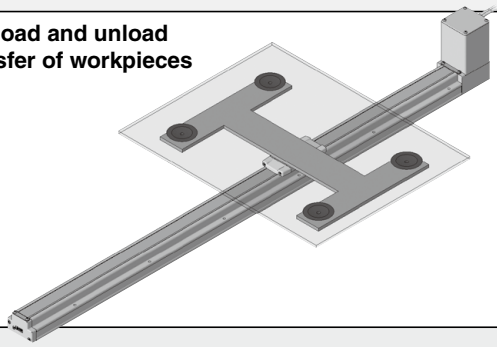

Series Variations

Ball Screw Drive/*LEFS Series*

Type	Size*1	Lead [mm]	Stroke [mm]*2	
Step motor (Servo/24 VDC) *3 Clean room compatible	16	5	50, 100, 150, 200, 250, 300, 350, 400, 450, 500	
		10		
	25	6	50, 100, 150, 200, 250, 300, 350, 400, 450, 500, 550, 600, 650, 700, 750, 800	
		12		
		20		
	32	8	50, 100, 150, 200, 250, 300, 350, 400, 450, 500, 550, 600, 650, 700, 750, 800, 850, 900, 950, 1000	
		16		
		24		
	40	10	150, 200, 250, 300, 350, 400, 450, 500, 550, 600, 650, 700, 750, 800, 850, 900, 950, 1000, 1100, 1200	
		20		
		30		
Servo motor (24 VDC) *3 Clean room compatible	16	5	50, 100, 150, 200, 250, 300, 350, 400, 450, 500	
		10		
	25	6	50, 100, 150, 200, 250, 300, 350, 400, 450, 500, 550, 600, 650, 700, 750, 800	
		12		
		20		
AC servo motor *3 Clean room compatible	25	6	50, 100, 150, 200, 250, 300, 350, 400, 450, 500, 550, 600, 650, 700, 750, 800	
		12		
		20		
	32	8	50, 100, 150, 200, 250, 300, 350, 400, 450, 500, 550, 600, 650, 700, 750, 800, 850, 900, 950, 1000	
		16		
		24		
	40	10	150, 200, 250, 300, 350, 400, 450, 500, 550, 600, 650, 700, 750, 800, 850, 900, 950, 1000, 1100, 1200	
		20		
		30		

*1 The size corresponds to the bore of the air cylinder with an equivalent force. (For the ball screw drive)
*2 Please consult with SMC for non-standard strokes as they are produced as special orders.
*3 For the clean room specification, refer to page 632. Excludes 20, 24, and 30 mm leads

Belt Drive/*LEFB Series*

Type	Size*1	Equivalent lead [mm]	Stroke [mm]*2	
Step motor (Servo/24 VDC)	16	48	300, 500, 600, 700, 800, 900, 1000	
	25	48	300, 500, 600, 700, 800, 900, 1000, 1200, 1500, 1800, 2000	
	32	48	300, 500, 600, 700, 800, 900, 1000, 1200, 1500, 1800, 2000	
Servo motor (24 VDC)	16	48	300, 500, 600, 700, 800, 900, 1000	
	25	48	300, 500, 600, 700, 800, 900, 1000, 1200, 1500, 1800, 2000	
AC servo motor	25	54	300, 400, 500, 600, 700, 800, 900, 1000, (1100), 1200, (1300), (1400), 1500, (1600), (1700), (1800), (1900), 2000	
	32	54	300, 400, 500, 600, 700, 800, 900, 1000, (1100), 1200, (1300), (1400), 1500, (1600), (1700), (1800), (1900), 2000, 2500	
	40	54	300, 400, 500, 600, 700, 800, 900, 1000, (1100), 1200, (1300), (1400), 1500, (1600), (1700), (1800), (1900), 2000, 2500, 3000	

For pick and place operations

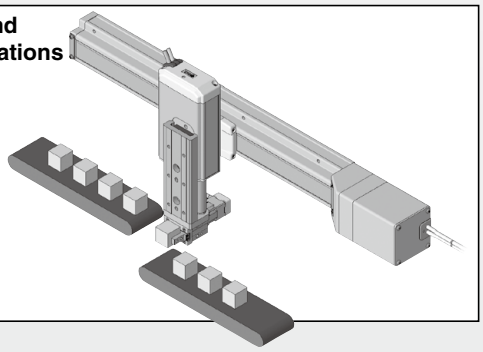

For vertical transfer

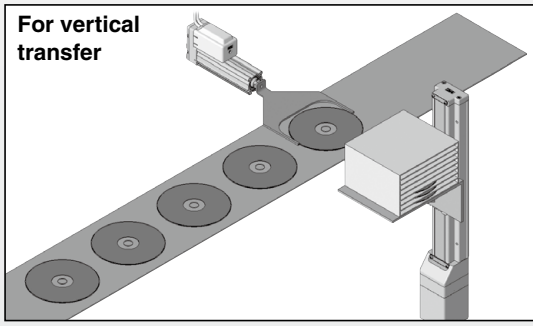

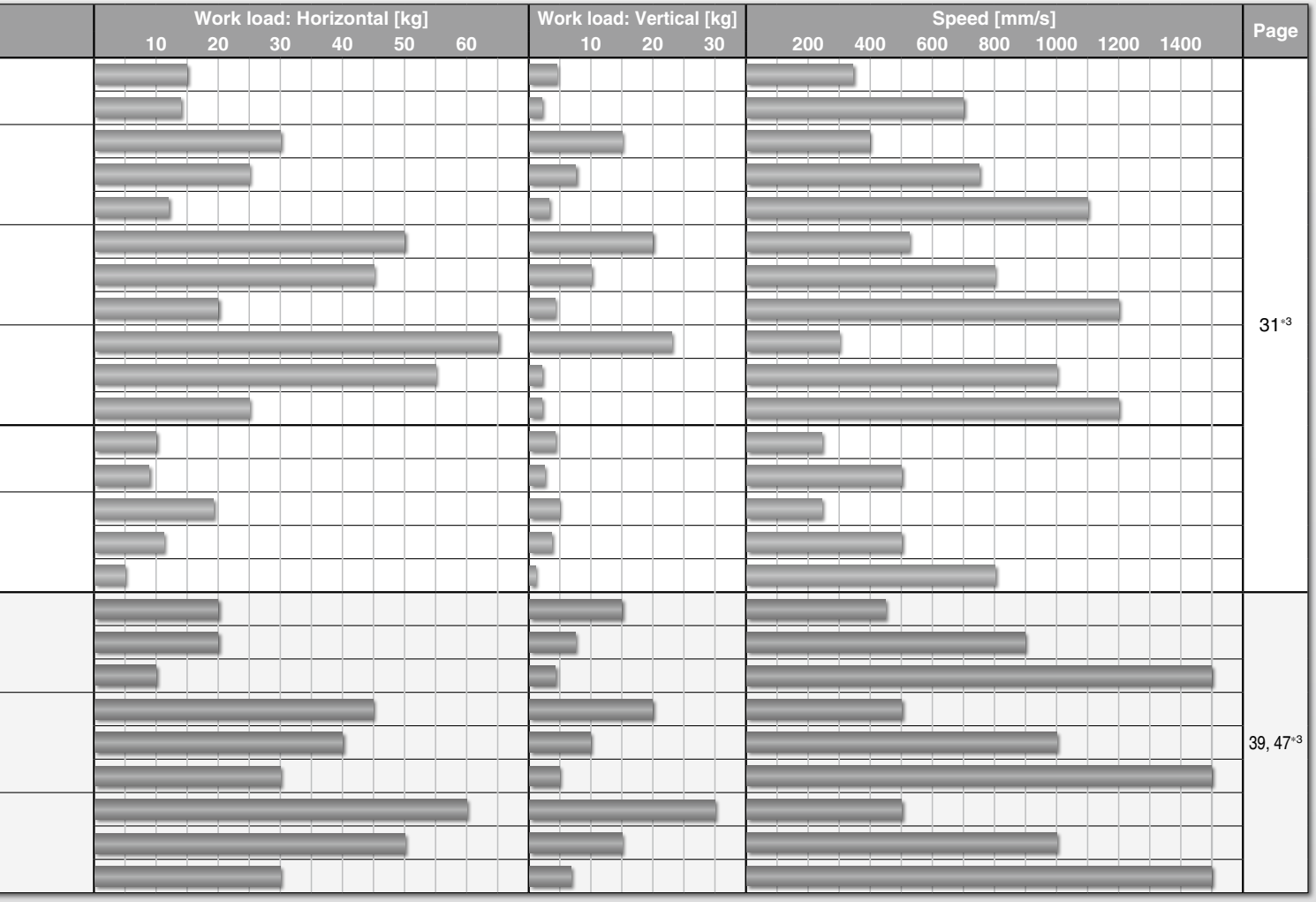

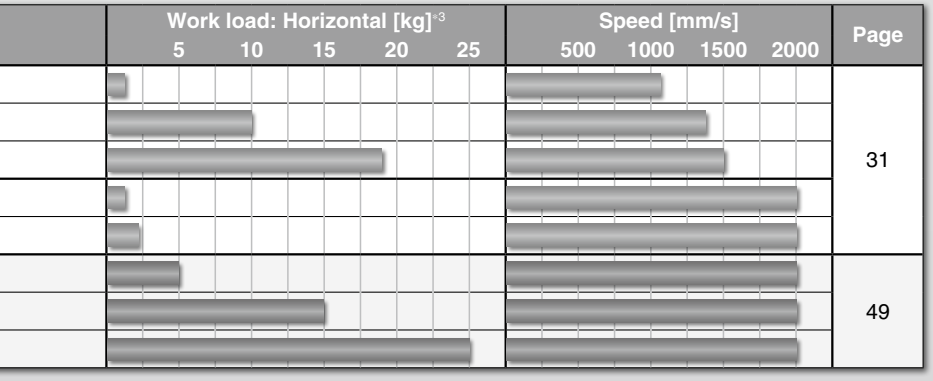

*1 The nominal size based on force (equivalent to the air cylinder) during operation with ball screws
*2 Please consult with SMC for non-standard strokes as they are produced as special orders.
*3 The belt drive actuator cannot be used for vertical applications.

Electric Actuator/Slider Type Ball Screw Drive *LEFS Series*

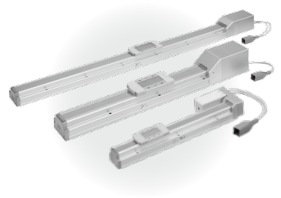

Step Motor (Servo/24 VDC) Servo Motor (24 VDC)

◎**Ball Screw Drive *LEFS Series***

Model Selection ..... p. 31
How to Order ..... p. 57
Specifications ..... p. 60
Construction ..... p. 62
Dimensions ..... p. 64



◎**Support Guide/*LEFG Series***

Model Selection ..... p. 54
How to Order ..... p. 109
Dimensions ..... p. 110

AC Servo Motor

LECS□ Series

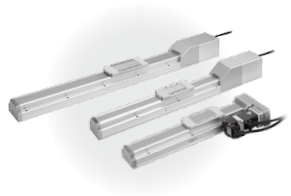

◎**Ball Screw Drive *LEFS Series***

Model Selection ..... p. 39
How to Order ..... p. 78
Specifications ..... p. 79
Construction ..... p. 80
Dimensions ..... p. 82

LECY□ Series

◎**Ball Screw Drive *LEFS Series***

Model Selection ..... p. 47
How to Order ..... p. 94
Specifications ..... p. 95
Construction ..... p. 96
Dimensions ..... p. 97

Environment

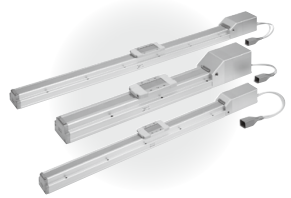

Step Motor (Servo/24 VDC) Servo Motor (24 VDC)

◎**Ball Screw Drive *11-LEFS Series*** Clean Room Specification

Model Selection ..... p. 31
Particle Generation Characteristics ..... p. 632
How to Order ..... p. 635
Specifications ..... p. 638
Dimensions ..... p. 640

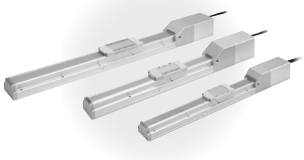

AC Servo Motor

◎**Ball Screw Drive *11-LEFS Series*** Clean Room Specification

Model Selection ..... p. 39, 47
Particle Generation Characteristics ..... p. 632
How to Order ..... p. 644, 646
Specifications ..... p. 645, 647
Dimensions ..... p. 648

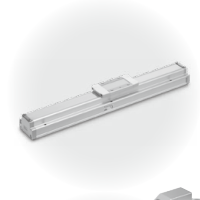

◎**Support Guide/*11-LEFG Series*** Clean Room Specification

Model Selection ..... p. 54
How to Order ..... p. 651
Dimensions ..... p. 652

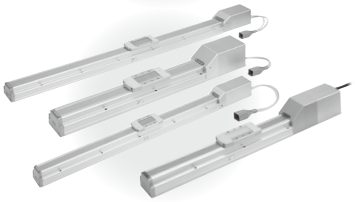

Step Motor (Servo/24 VDC) Servo Motor (24 VDC) AC Servo Motor

◎**Ball Screw Drive *25A-LEFS Series*** Secondary Battery Compatible

Model Selection ..... p. 31, 39, 47
How to Order ..... p. 665, 668, 669

Electric Actuator/Slider Type Belt Drive *LEFB Series*

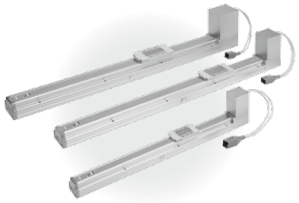

Step Motor (Servo/24 VDC) Servo Motor (24 VDC)

◎Belt Drive *LEFB Series*

Model Selection ..... p. 31
How to Order ..... p. 113
Specifications ..... p. 116
Construction ..... p. 118
Dimensions ..... p. 119

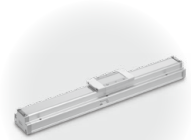

◎Support Guide/*LEFG Series*

Model Selection ..... p. 54
How to Order ..... p. 156
Dimensions ..... p. 157

AC Servo Motor

LECS□ Series

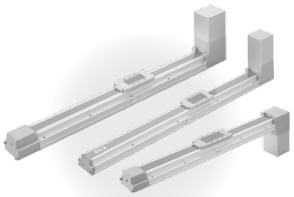

◎Belt Drive *LEFB Series*

Model Selection ..... p. 49
How to Order ..... p. 124
Specifications ..... p. 125
Construction ..... p. 126
Dimensions ..... p. 128

LECY□ Series

◎Belt Drive *LEFB Series*

Model Selection ..... p. 49
How to Order ..... p. 140
Specifications ..... p. 141
Construction ..... p. 142
Dimensions ..... p. 144

Auto Switch Mounting ..... p. 161
Specific Products Precautions ..... p. 165

◎Step Motor (Servo/24 VDC)/ Servo Motor (24 VDC) Controller/Driver

Step Data Input Type/***JXC51/61 Series*** ..... p. 706-1
Step Data Input Type/***LECA6 Series*** ..... p. 707
Gateway Unit/***LEC-G Series*** ..... p. 715
Programless Controller/***LECP1 Series*** ..... p. 719
Pulse Input Type/***LECPA Series*** ..... p. 731
EtherCAT®/EtherNet/IP™/PROFINET/DeviceNet™/IO-Link Direct Input Type/***JXCE1/91/P1/D1/L1/M1 Series*** ..... p. 741



◎3-Axis Step Motor Controller

EtherNet/IP™ Type/***JXC92 Series*** ..... p. 747



◎4-Axis Step Motor (Servo/24 VDC) Controller

Parallel I/O Type/***JXC73/83 Series*** ..... p. 749
EtherNet/IP™ Type/***JXC93 Series*** ..... p. 749



Actuator Cable ..... p. 758
Communication Cable for Controller Setting/***LEC-W2A-□*** ... p. 760
Teaching Box/***LEC-T1*** ..... p. 761

◎AC Servo Motor Driver

LECSA/LECSB/LECSC/LECSS Series ..... p. 777
LECSB-T/LECSC-T/LECSS-T Series ..... p. 777
LECSN-T Series 20-E763
LECYM/LECYU Series ..... p. 801



Slider Type

Ball Screw Drive *LEFS Series*

Step Motor (Servo/24 VDC) Servo Motor (24 VDC)

p. 57

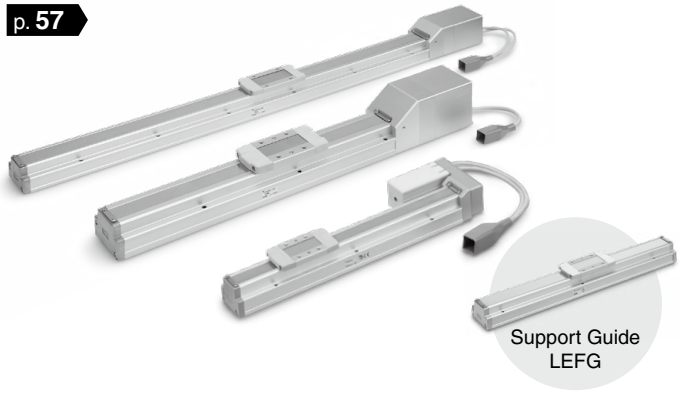

AC Servo Motor

p. 78, 94

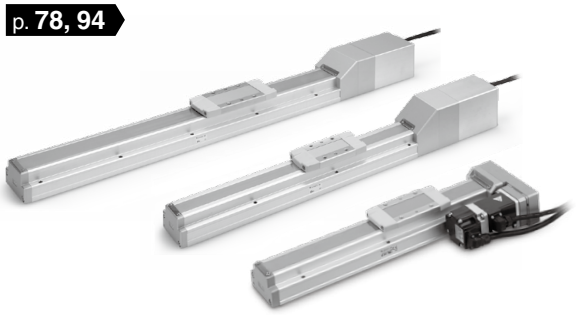

Belt Drive *LEFB Series*

Step Motor (Servo/24 VDC) Servo Motor (24 VDC)

p. 113

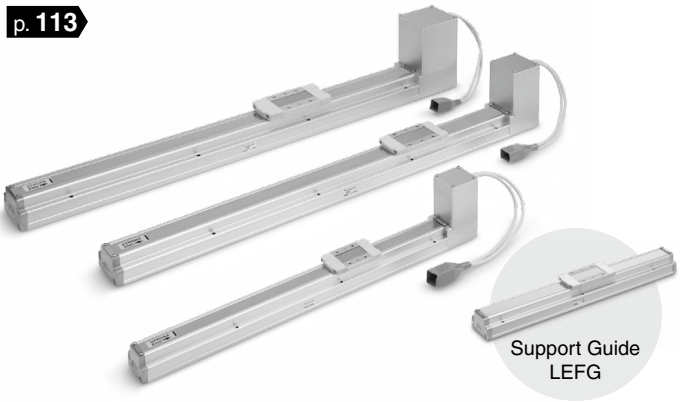

AC Servo Motor

p. 124, 140

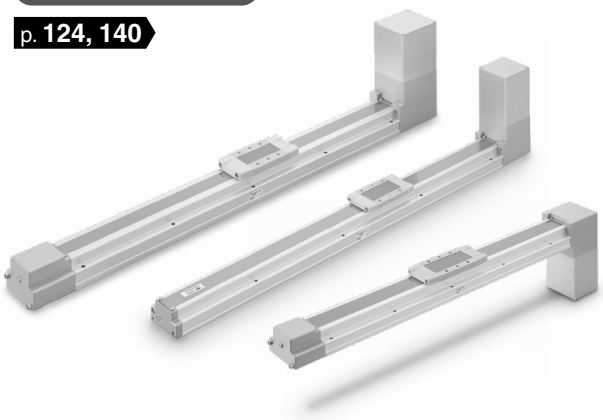

Environment

Step Motor (Servo/24 VDC) Servo Motor (24 VDC)

Clean Room Specification **11-LEFS Series**

p. 635

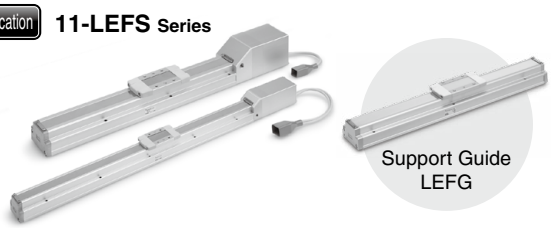

Secondary Battery Compatible **25A-LEFS Series**

p. 665



AC Servo Motor

Clean Room Specification **11-LEFS Series**

p. 644, 646



Secondary Battery Compatible **25A-LEFS Series**

p. 668, 669

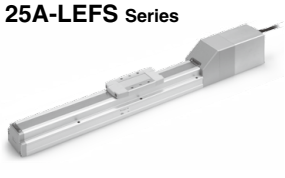

Step Motor/Servo Motor Controller/Driver p. 684

AC Servo Motor Driver p. 764

Model Selection

LEFS Series ▶p. 57 LEFB Series ▶p. 113 11-LEFS Series ▶p. 635
25A-LEFS Series ▶p. 665

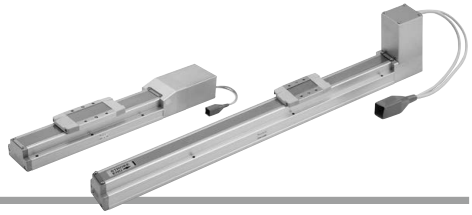

Selection Procedure

Step 1 Check the work load–speed. → **Step 2** Check the cycle time. → **Step 3** Check the allowable moment.

Selection Example

Operating conditions

- Workpiece mass: 5 [kg]
- Speed: 300 [mm/s]
- Acceleration/Deceleration: 3000 [mm/s^2]
- Stroke: 200 [mm]
- Mounting orientation: Horizontal upward
- Workpiece mounting condition:

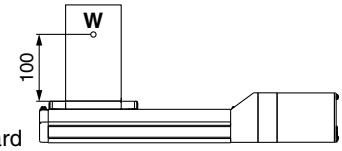

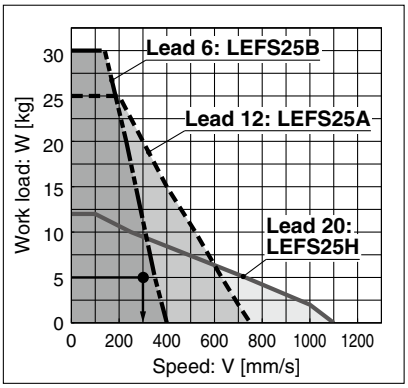

<Speed–Work load graph> (LEFS25/Step motor)

Step 1 Check the work load–speed. <Speed–Work load graph> (Pages 32 to 35)

Select a model based on the workpiece mass and speed while referencing the speed–work load graph.

Selection example) The **LEFS25A-200** can be temporarily selected as a possible candidate based on the graph shown on the right side.

Step 2 Check the cycle time.

Calculate **the cycle time** using the following calculation method.

Cycle time:

T can be found from the following equation.

$T = T1 + T2 + T3 + T4$ [s]

- T1: Acceleration time and T3: Deceleration time can be found by the following equation.

$T1 = V/a1$ [s] $T3 = V/a2$ [s]

- T2: Constant speed time can be found from the following equation.

$$T2 = \frac{L - 0.5 \cdot V \cdot (T1 + T3)}{V} \text{ [s]}$$

- T4: Settling time varies depending on the conditions such as motor types, load and in position of the step data. Therefore, calculate the settling time while referencing to the following value.

$T4 = 0.2$ [s]

Calculation example)
T1 to T4 can be calculated as follows.

$T1 = V/a1 = 300/3000 = 0.1$ [s],

$T3 = V/a2 = 300/3000 = 0.1$ [s]

$$T2 = \frac{L - 0.5 \cdot V \cdot (T1 + T3)}{V}$$

$$= \frac{200 - 0.5 \cdot 300 \cdot (0.1 + 0.1)}{300}$$

$= 0.57$ [s]

$T4 = 0.2$ [s]

The cycle time can be found as follows.

$T = T1 + T2 + T3 + T4$

$= 0.1 + 0.57 + 0.1 + 0.2$

$=$ **0.97 [s]**

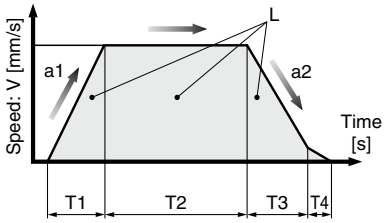

L : Stroke [mm] ··· (Operating condition)
V : Speed [mm/s] ··· (Operating condition)
a1: Acceleration [mm/s^2] ··· (Operating condition)
a2: Deceleration [mm/s^2] ··· (Operating condition)

T1: Acceleration time [s]
Time until reaching the set speed
T2: Constant speed time [s]
Time while the actuator is operating at a constant speed
T3: Deceleration time [s]
Time from the beginning of the constant speed operation to stop
T4: Settling time [s]
Time until positioning is completed

Step 3 Check the allowable moment. <Static allowable moment> (page 35) <Dynamic allowable moment> (page 36)

Confirm the moment that applies to the actuator is within the allowable range for both static and dynamic conditions.

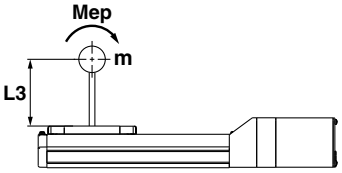

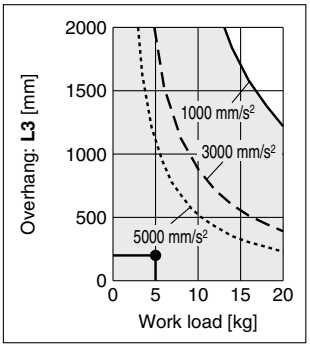

Based on the above calculation result, the LEFS25A-200 should be selected.

∗ If the step motor and servo motors do not meet your specifications, also consider the AC servo specification on page 39.

For the LECPA and JXC□$^{2}_{3}$, refer to page 33.

Speed–Work Load Graph (Guide)
For Step Motor (Servo/24 VDC) JXC□1, LECP1

∗ The following graphs show the values when moving force is 100%.

LEFS16/Ball Screw Drive

Horizontal

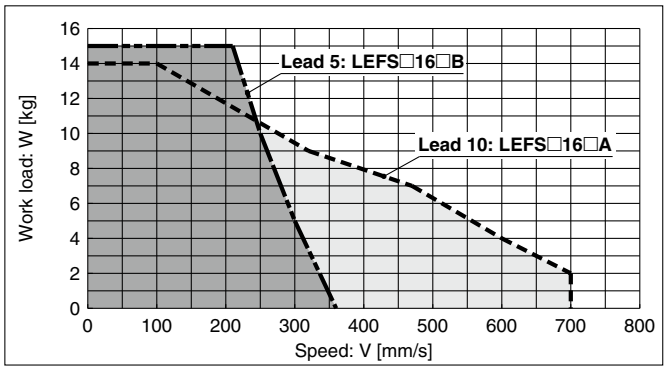

Vertical

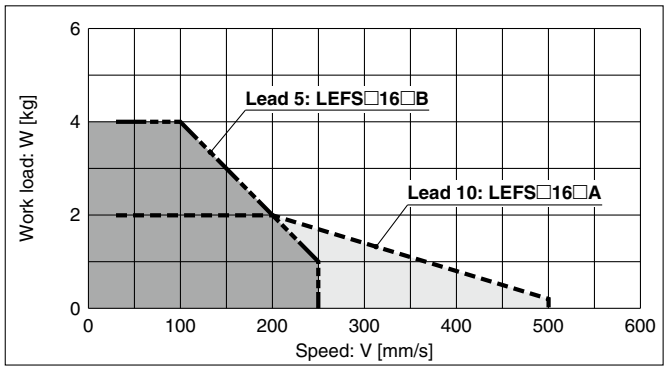

LEFS25/Ball Screw Drive

Horizontal

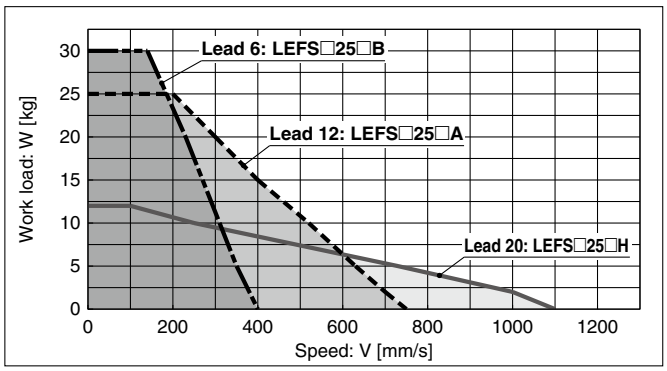

Vertical

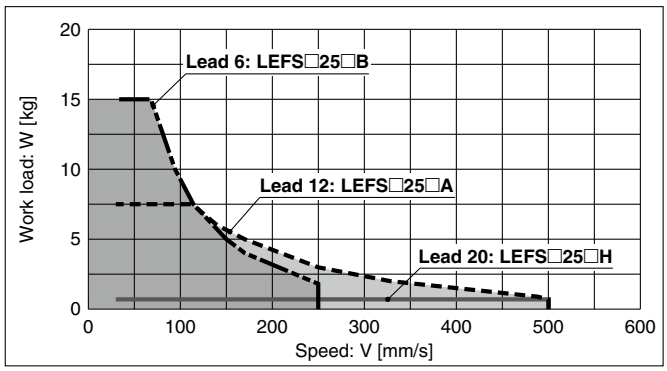

LEFS32/Ball Screw Drive

Horizontal

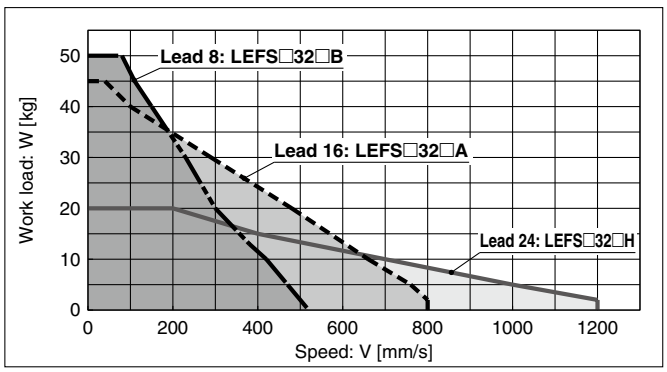

Vertical

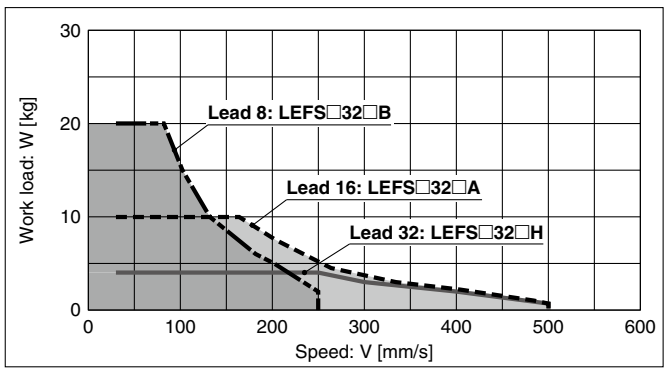

LEFS40/Ball Screw Drive

Horizontal

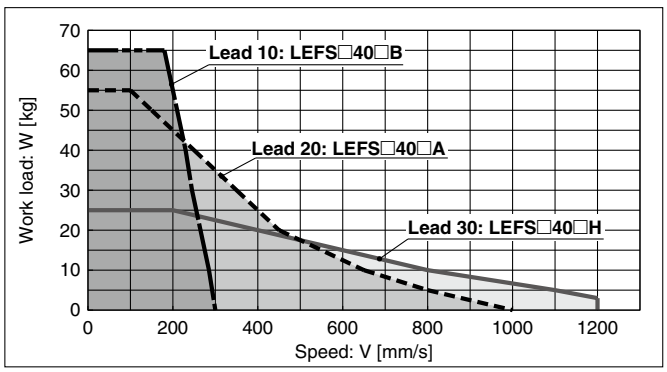

Vertical

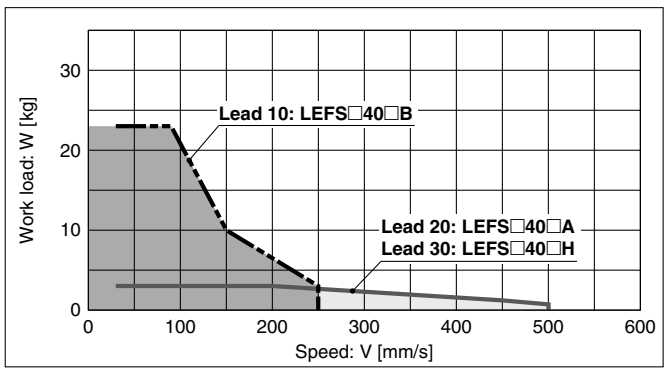

For the JXC□1, and LECP1, refer to page 32.

Speed–Work Load Graph (Guide)
For Step Motor (Servo/24 VDC) LECPA, JXC□ 2 3

∗ The following graphs show the values when moving force is 100%.

LEFS16/Ball Screw Drive

Horizontal

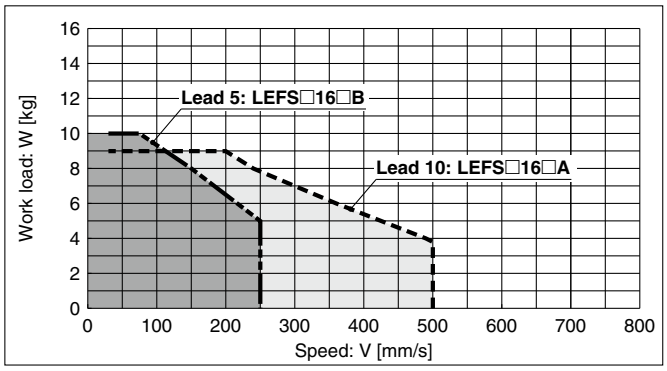

Vertical

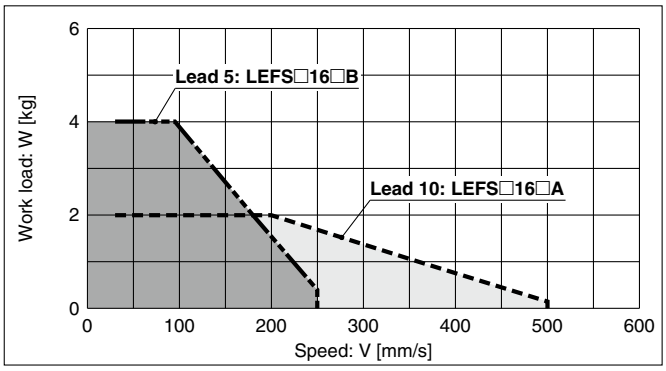

LEFS25/Ball Screw Drive

Horizontal

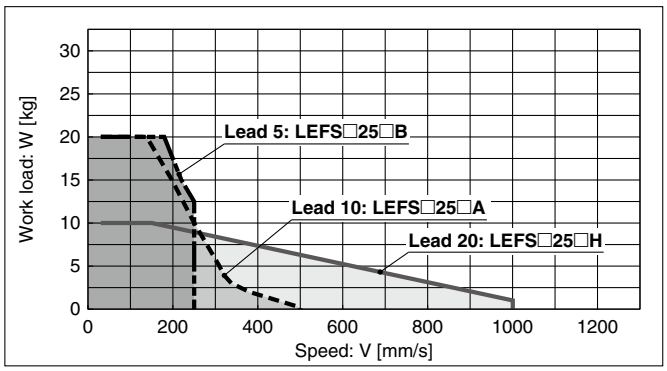

Vertical

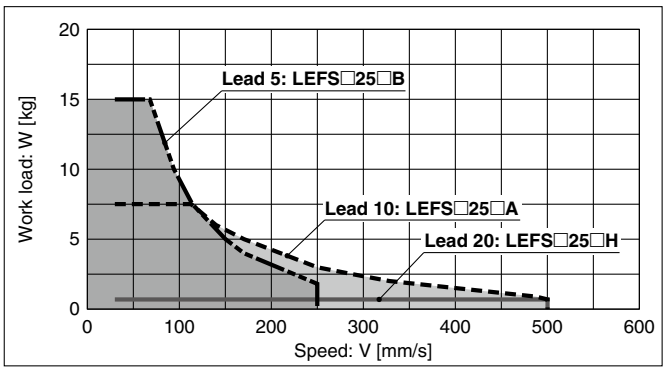

LEFS32/Ball Screw Drive

Horizontal

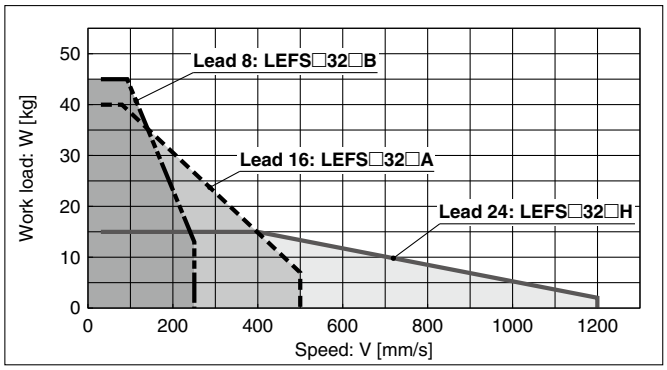

Vertical

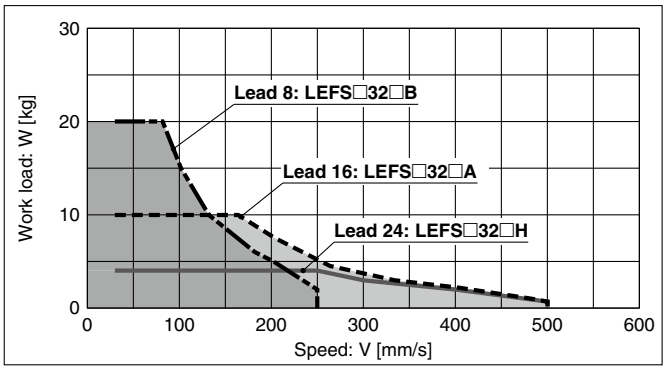

LEFS40/Ball Screw Drive

Horizontal

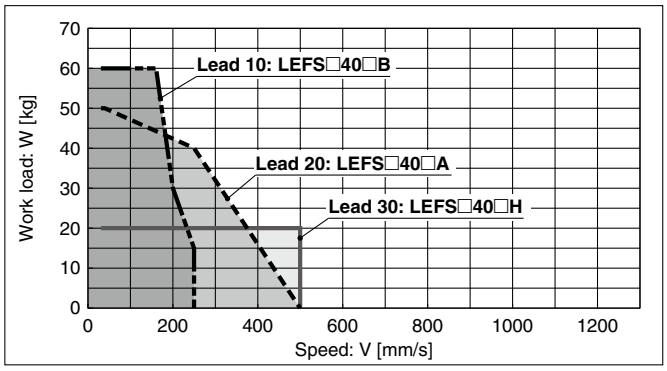

Vertical

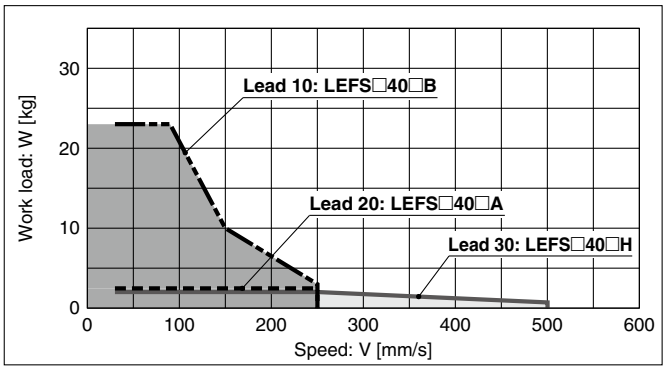

Speed–Work Load Graph (Guide)
For Step Motor (Servo/24 VDC) JXC□1, LECP1

∗ The following graph shows the values when moving force is 100%.

LEFB/Belt Drive

Horizontal

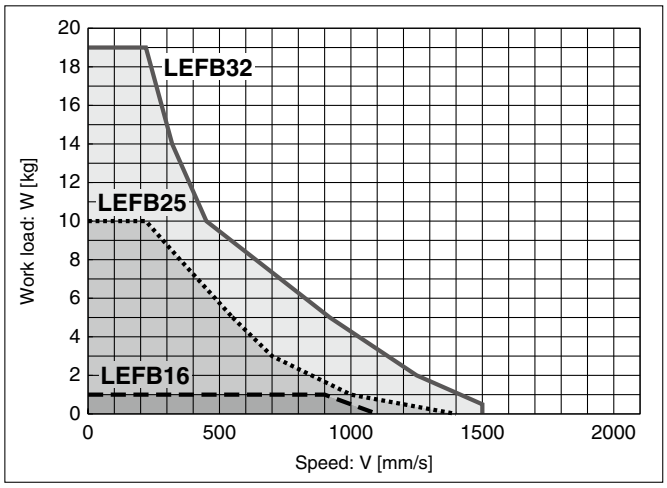

For Step Motor (Servo/24 VDC) LECPA, JXC□ $^{2}_{3}$

∗ The following graph shows the values when moving force is 100%.

LEFB/Belt Drive

Horizontal

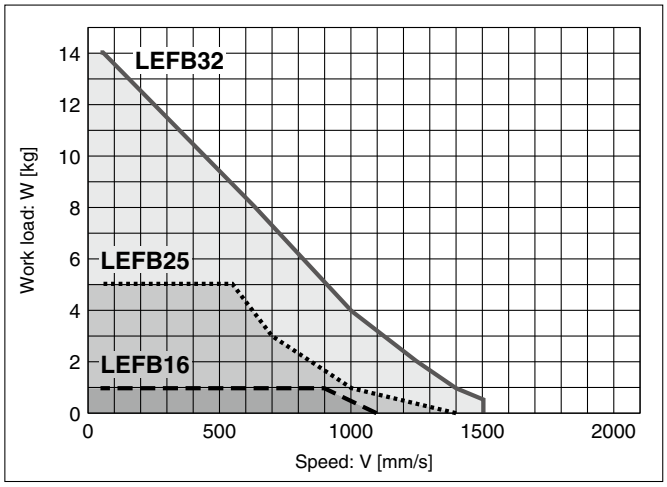

Speed–Work Load Graph (Guide)
Servo Motor (24 VDC)

∗ The following graphs show the values when moving force is 250%.

LEFS16A/Ball Screw Drive

Horizontal

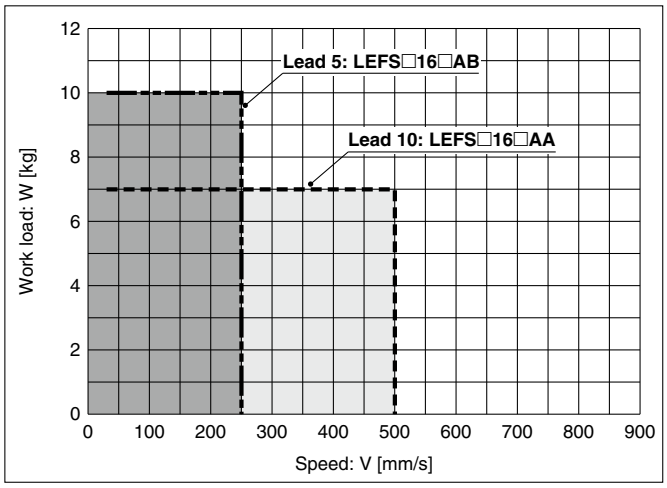

Vertical

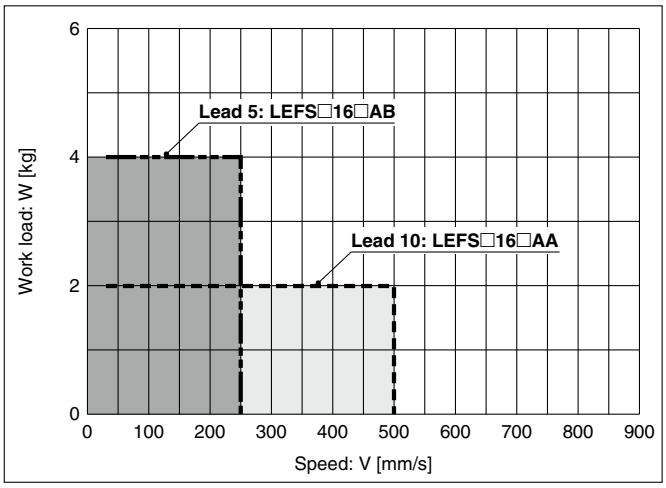

LEFS25A/Ball Screw Drive

Horizontal

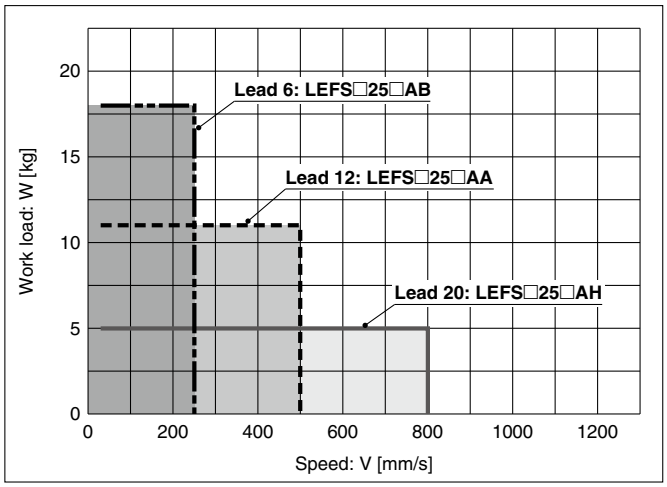

Vertical

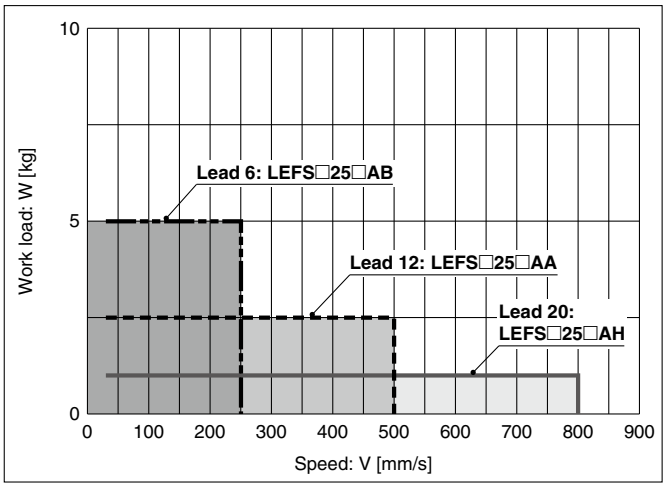

Servo Motor (24 VDC)

∗ The following graph shows the values when moving force is 250%.

LEFB/Belt Drive

Horizontal

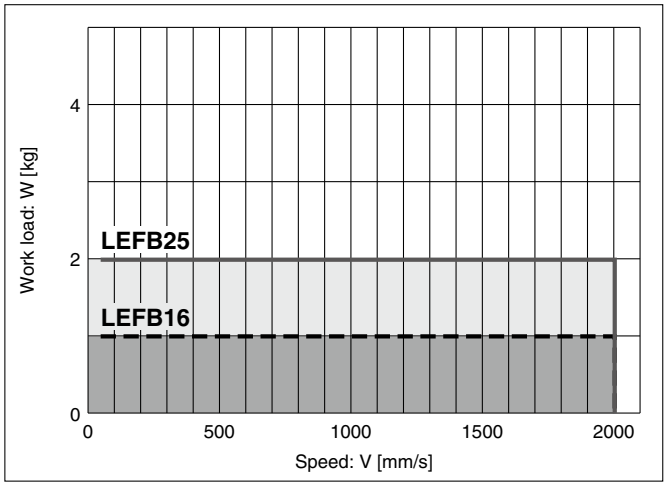

Static Allowable Moment∗1

[N·m]

Model	Size	Pitching	Yawing	Rolling
LEF□	**16**	10	10	20
	25	27	27	52
	32	46	46	101
	40	110	110	207

∗1 The static allowable moment is the amount of static moment which can be applied to the actuator when it is stopped.
If the product is exposed to impact or repeated load, be sure to take adequate safety measures when using the product.

Dynamic Allowable Moment

* This graph shows the amount of allowable overhang (guide unit) when the center of gravity of the workpiece overhangs in one direction. When selecting the overhang, refer to the "Calculation of Guide Load Factor" or the Electric Actuator Model Selection Software for confirmation: https://www.smcworld.com

Acceleration/Deceleration ——1000 mm/s² – – –3000 mm/s²

Orientation	Load overhanging direction **m** : Work load [kg] **Me**: Allowable moment [N·m] **L** : Overhang to the work load center of gravity [mm]		Model LEF16	LEF25	LEF32	LEF40
Horizontal/Bottom	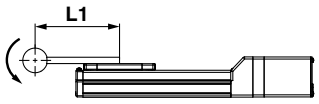	X	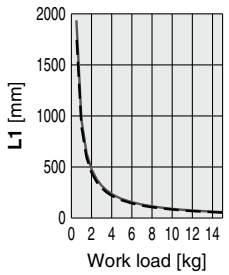	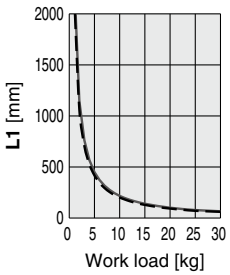	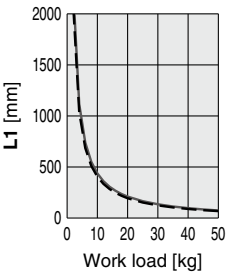	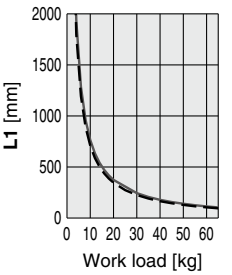
	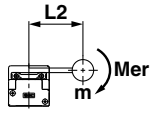	Y	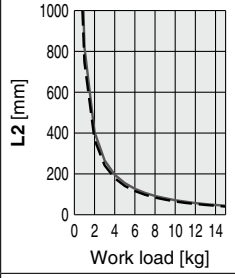	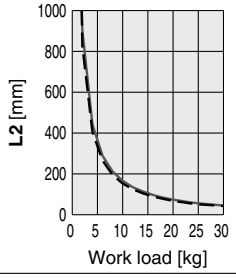	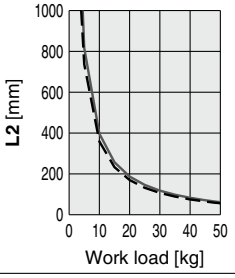	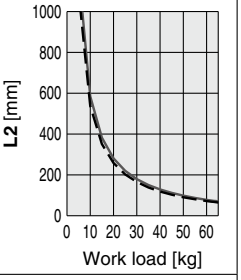
	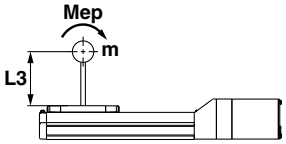	Z	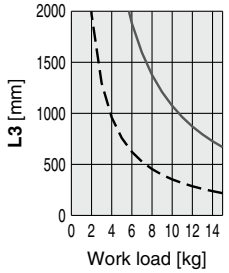	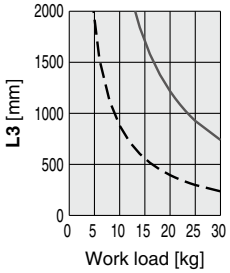	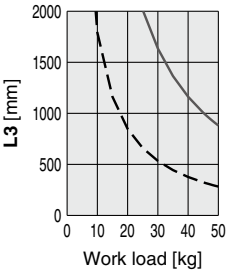	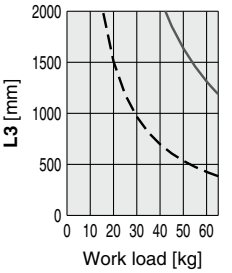
Wall	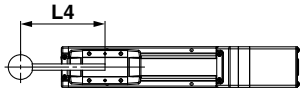	X	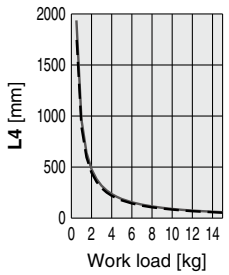	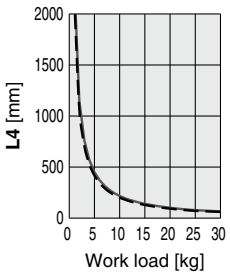	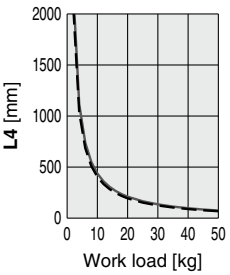	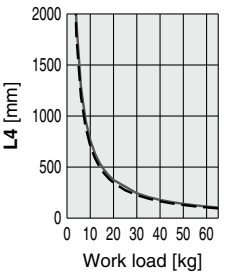
	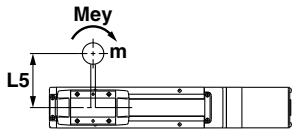	Y	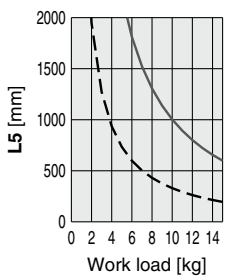	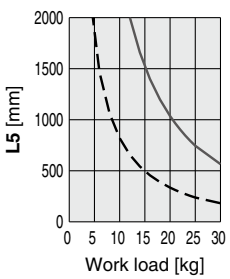	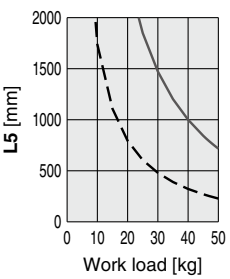	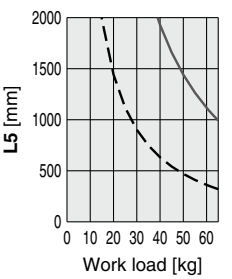
	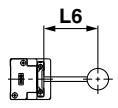	Z	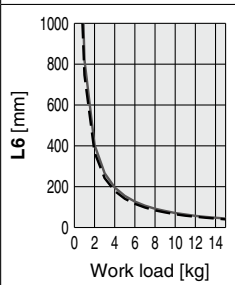	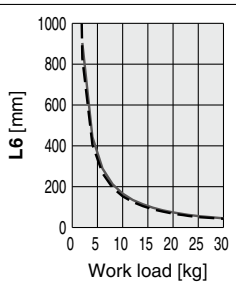	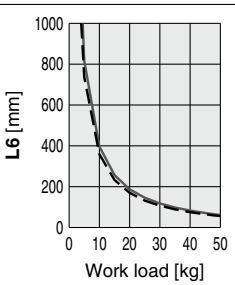	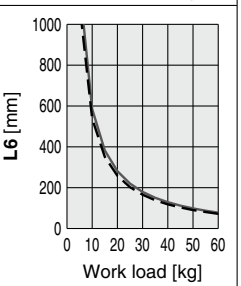

Dynamic Allowable Moment

* This graph shows the amount of allowable overhang (guide unit) when the center of gravity of the workpiece overhangs in one direction. When selecting the overhang, refer to the "Calculation of Guide Load Factor" or the Electric Actuator Model Selection Software for confirmation: https://www.smcworld.com

Acceleration/Deceleration ——1000 mm/s² – – –3000 mm/s²

Orientation	Load overhanging direction **m** : Work load [kg] **Me**: Allowable moment [N·m] **L** : Overhang to the work load center of gravity [mm]		Model			
			LEF16	**LEF25**	**LEF32**	**LEF40**
Vertical	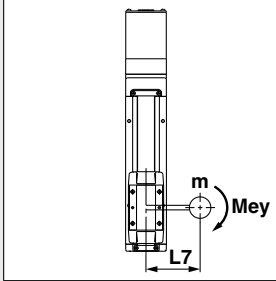	Y	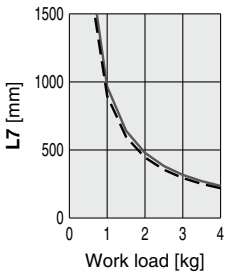	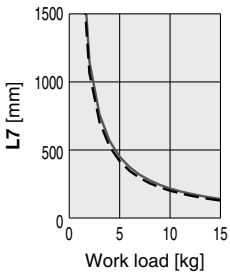	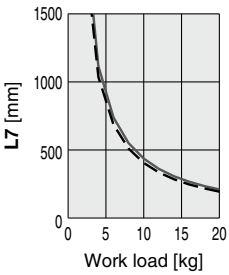	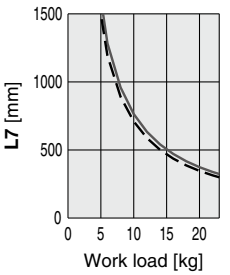
	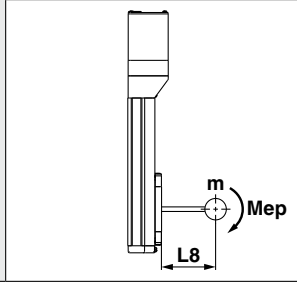	Z	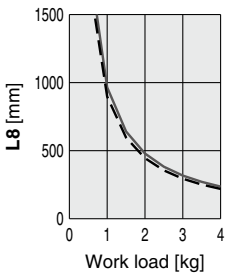	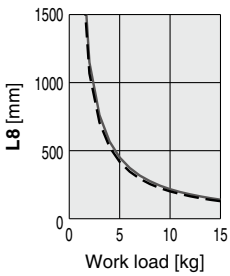	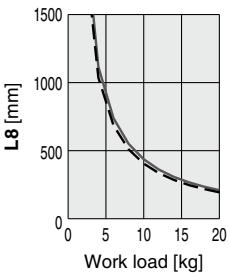	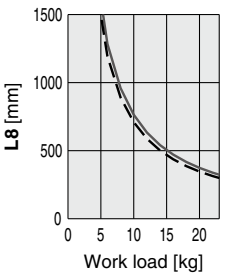

Calculation of Guide Load Factor

1. Decide operating conditions.
   Model: LEFS/LEFB
   Size: 16/25/32/40
   Mounting orientation: Horizontal/Bottom/Wall/Vertical
   Acceleration [mm/s²]: **a**
   Work load [kg]: **m**
   Work load center position [mm]: **Xc/Yc/Zc**
2. Select the target graph while referencing the model, size, and mounting orientation.
3. Based on the acceleration and work load, find the overhang [mm]: **Lx/Ly/Lz** from the graph.
4. Calculate the load factor for each direction.
   α**x = Xc/Lx**, α**y = Yc/Ly**, α**z = Zc/Lz**
5. Confirm the total of α**x**, α**y**, and α**z** is 1 or less.
   α**x** + α**y** + α**z** ≤ **1**
   When 1 is exceeded, please consider a reduction of acceleration and work load, or a change of the work load center position and series.

Mounting orientation

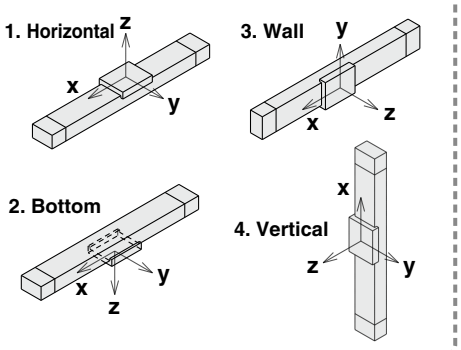

Example

1. Operating conditions
   Model: LEFS40
   Size: 40
   Mounting orientation: Horizontal
   Acceleration [mm/s²]: 3000
   Work load [kg]: 20
   Work load center position [mm]: **Xc = 0**, **Yc = 50**, **Zc = 200**
2. Select the graphs for horizontal of the LEF40 on page 36.
3. **Lx = 400 mm**, **Ly = 250 mm**, **Lz = 1500 mm**
4. The load factor for each direction can be found as follows.
   α**x = 0/400 = 0**
   α**y = 50/250 = 0.2**
   α**z = 200/1500 = 0.13**
5. α**x** + α**y** + α**z = 0.33** ≤ **1**

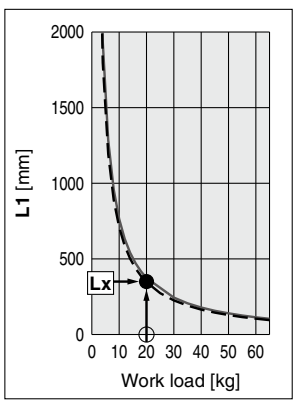

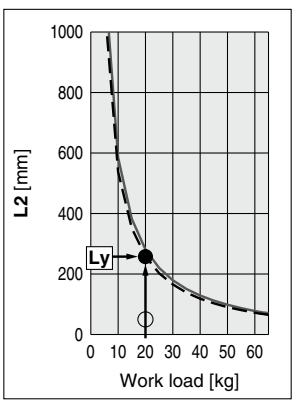

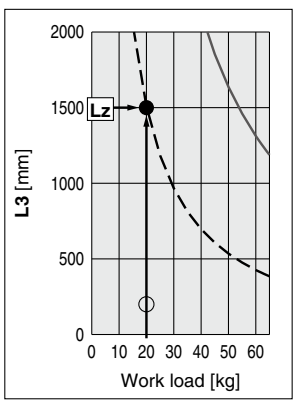

Table Accuracy (Reference Value)

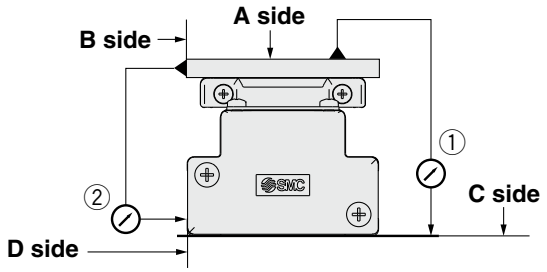

Model	Traveling parallelism [mm] (Every 300 mm)	
	① C side traveling parallelism to A side	② D side traveling parallelism to B side
LEF16	0.05	0.03
LEF25	0.05	0.03
LEF32	0.05	0.03
LEF40	0.05	0.03

∗ Traveling parallelism does not include the mounting surface accuracy. (Excludes when the stroke exceeds 2000 mm)

Table Displacement (Reference Value)

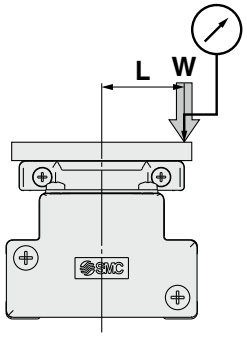

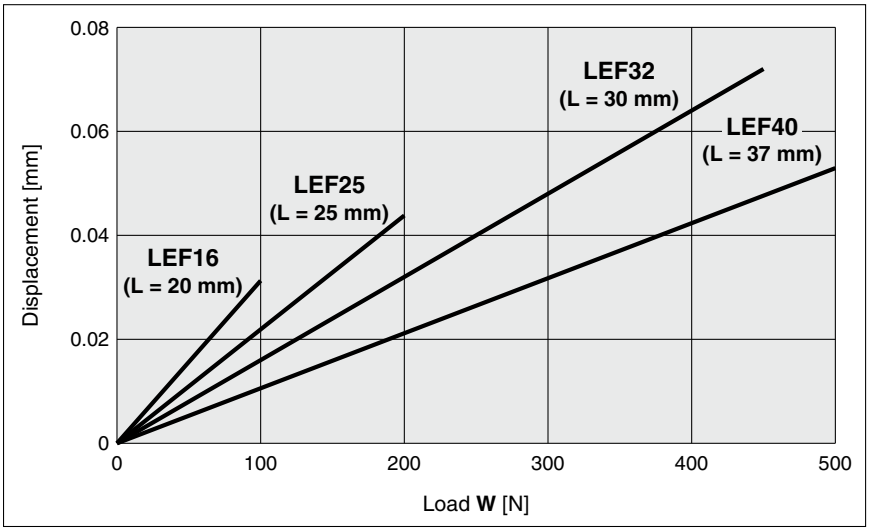

∗ This displacement is measured when a 15 mm aluminum plate is mounted and fixed on the table.
∗ Check the clearance and play of the guide separately.

Overhang Displacement Due to Table Clearance (Initial Reference Value)

Basic type

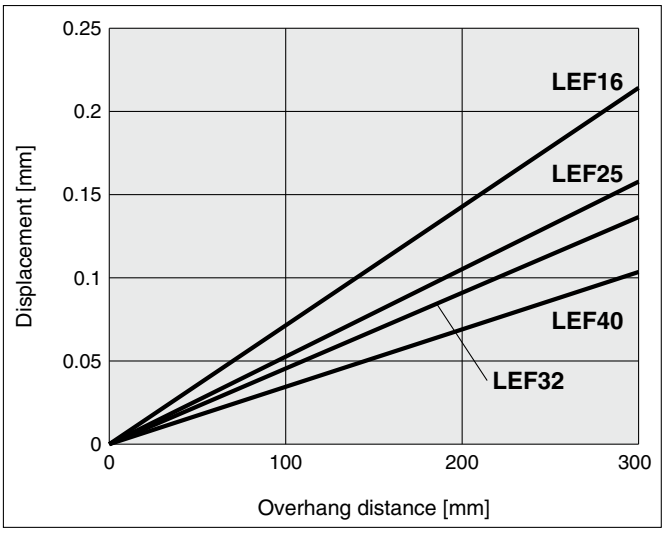

High-precision type

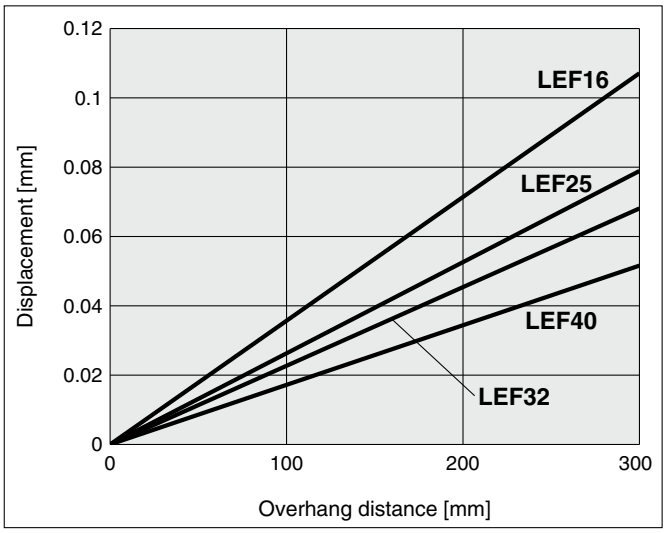

Model Selection

LEFS Series ▶p. 78 LECY□ Series ▶p. 94 11-LEFS Series ▶p. 644 25A-LEFS Series ▶p. 668

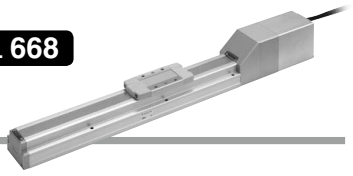

Selection Procedure

Step 1 Check the work load–speed. → **Step 2** Check the cycle time. → **Step 3** Check the allowable moment.

Selection Example

Operating conditions

- Workpiece mass: 45 [kg]
- Speed: 300 [mm/s]
- Acceleration/Deceleration: 3000 [mm/s²]
- Stroke: 200 [mm]
- Mounting position: Horizontal upward
- Workpiece mounting condition:

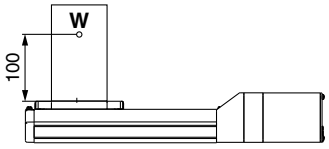

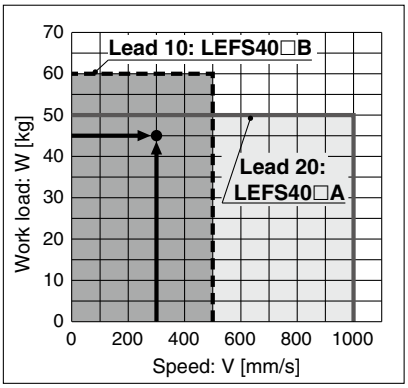

<Speed–Work load graph> (LEFS40)

Step 1 **Check the work load–speed. <Speed–Work load graph>** (Page 40)

Select a model based on the workpiece mass and speed while referencing the speed–work load graph.

Selection example) The **LEFS40S4B-200** can be temporarily selected as a possible candidate based on the graph shown on the right side.

Step 2 **Check the cycle time.**

Calculate **the cycle time** using the following calculation method.

Cycle time:

T can be found from the following equation.

$$T = T1 + T2 + T3 + T4 \text{ [s]}$$

- T1: Acceleration time and T3: Deceleration time can be found by the following equation.

$$T1 = V/a1 \text{ [s]} \qquad T3 = V/a2 \text{ [s]}$$

- T2: Constant speed time can be found from the following equation.

$$T2 = \frac{L - 0.5 \cdot V \cdot (T1 + T3)}{V} \text{ [s]}$$

- T4: Settling time varies depending on the motor type and load. The value below is recommended.

$$T4 = 0.05 \text{ [s]}$$

Calculation example)
T1 to T4 can be calculated as follows.

$T1 = V/a1 = 300/3000 = 0.1$ [s],

$T3 = V/a2 = 300/3000 = 0.1$ [s]

$$T2 = \frac{L - 0.5 \cdot V \cdot (T1 + T3)}{V} = \frac{200 - 0.5 \cdot 300 \cdot (0.1 + 0.1)}{300} = 0.57 \text{ [s]}$$

$T4 = 0.05$ [s]

The cycle time can be found as follows.

$T = T1 + T2 + T3 + T4$

$= 0.1 + 0.57 + 0.1 + 0.05$

$=$ **0.82 [s]**

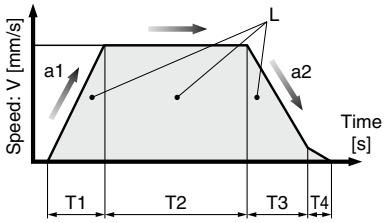

L : Stroke [mm] ··· (Operating condition)
V : Speed [mm/s] ··· (Operating condition)
a1: Acceleration [mm/s²] ··· (Operating condition)
a2: Deceleration [mm/s²] ··· (Operating condition)

T1: Acceleration time [s]
Time until reaching the set speed
T2: Constant speed time [s]
Time while the actuator is operating at a constant speed
T3: Deceleration time [s]
Time from the beginning of the constant speed operation to stop
T4: Settling time [s]
Time until positioning is completed

Step 3 **Check the allowable moment.** **<Static allowable moment>** (page 35) **<Dynamic allowable moment>** (page 44)

Confirm the moment that applies to the actuator is within the allowable range for both static and dynamic conditions.

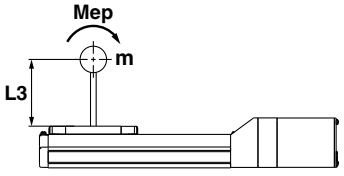

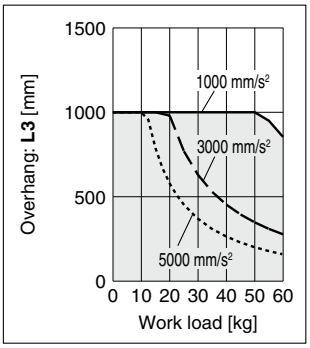

Based on the above calculation result, the LEFS40S4B-200 should be selected.

Speed–Work Load Graph/Required Conditions for "Regeneration Option"(Guide)

* The allowable speed is restricted depending on the stroke. Select it by referring to the "Allowable Stroke Speed" below.

LEFS25/Ball Screw Drive

Horizontal

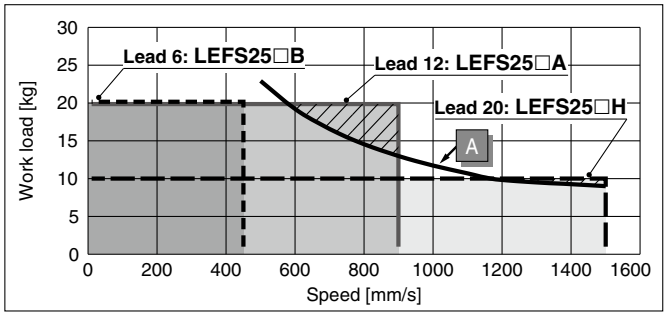

Vertical

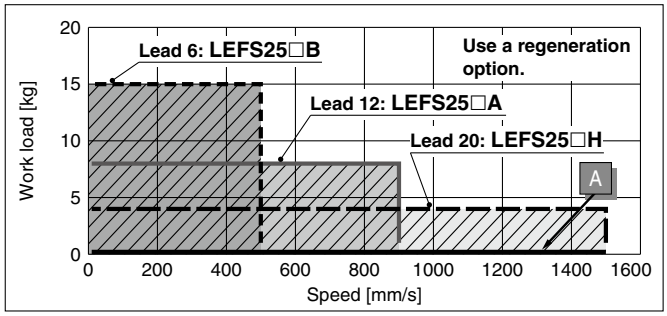

LEFS32/Ball Screw Drive

Horizontal

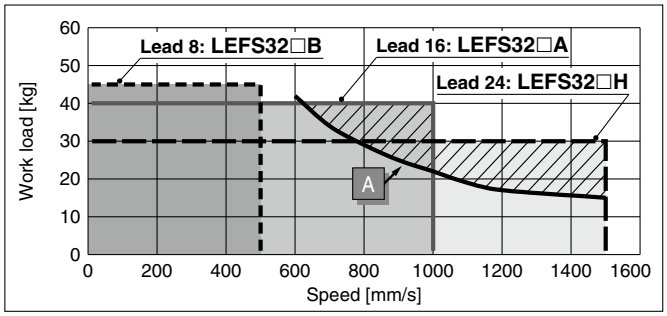

Vertical

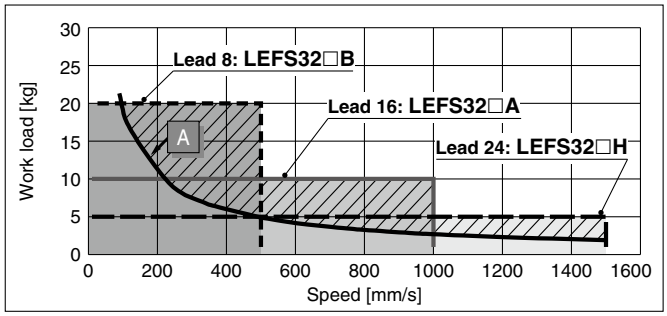

LEFS40/Ball Screw Drive

Horizontal

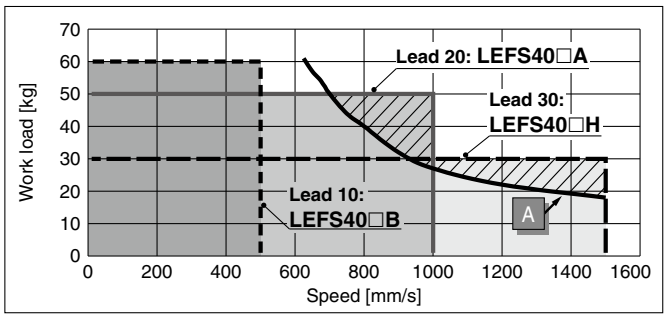

Vertical

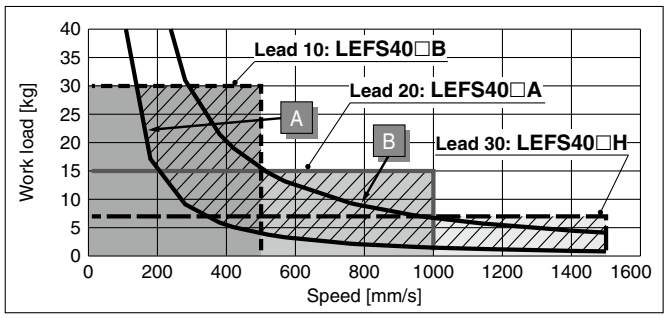

Required conditions for "Regeneration option"

* Regeneration option is required when using the product above the regeneration line in the graph. (It must be ordered separately.)

"Regeneration Option" Models

Operating condition	Model
A	LEC-MR-RB-032
B	LEC-MR-RB-12

Allowable Stroke Speed

[mm/s]

Model	AC servo motor	Lead		Stroke [mm]											
		Symbol	[mm]	Up to 100	Up to 200	Up to 300	Up to 400	Up to 500	Up to 600	Up to 700	Up to 800	Up to 900	Up to 1000	Up to 1100	Up to 1200
LEFS25	100 W /□40	H	20	1500				1200	900	700	550	—	—	—	—
		A	12	900				720	540	420	330	—	—	—	—
		B	6	450				360	270	210	160	—	—	—	—
		(Motor rotation speed)		(4500 rpm)				(3650 rpm)	(2700 rpm)	(2100 rpm)	(1650 rpm)	—	—	—	—
LEFS32	200 W /□60	H	24	1500					1200	930	750	610	510	—	—
		A	16	1000					800	620	500	410	340	—	—
		B	8	500					400	310	250	200	170	—	—
		(Motor rotation speed)		(3750 rpm)					(3000 rpm)	(2325 rpm)	(1875 rpm)	(1537 rpm)	(1275 rpm)	—	—
LEFS40	400 W /□60	H	30	—	1500					1410	1140	930	780	500	500
		A	20	—	1000					940	760	620	520	440	380
		B	10	—	500					470	380	310	260	220	190
		(Motor rotation speed)		—	(3000 rpm)					(2820 rpm)	(2280 rpm)	(1860 rpm)	(1560 rpm)	(1320 rpm)	(1140 rpm)

Work Load–Acceleration/Deceleration Graph (Guide)

LEFS25□□H/Ball Screw Drive

Horizontal

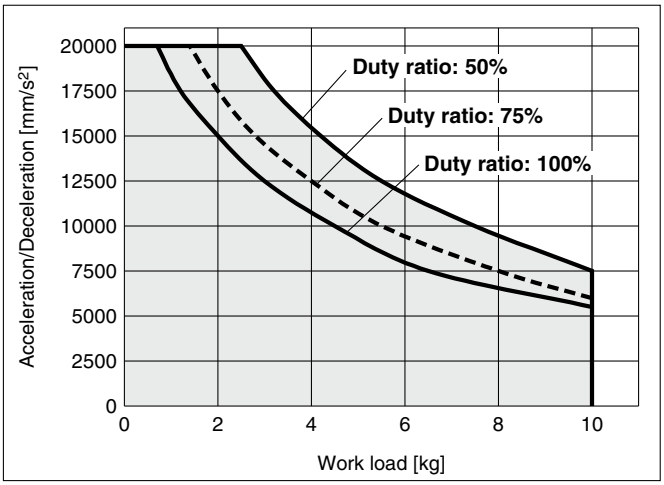

LEFS25□□H/Ball Screw Drive

Vertical

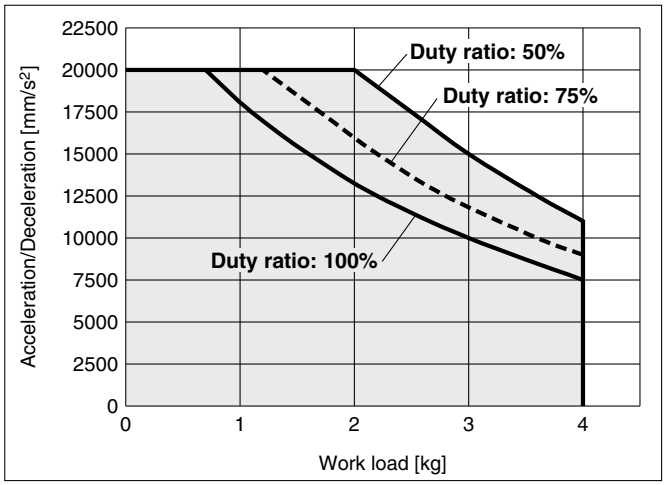

LEFS25□□A/Ball Screw Drive

Horizontal

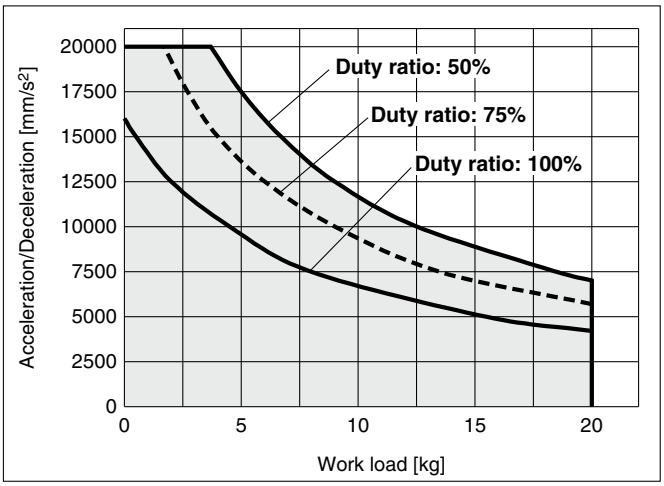

LEFS25□□A/Ball Screw Drive

Vertical

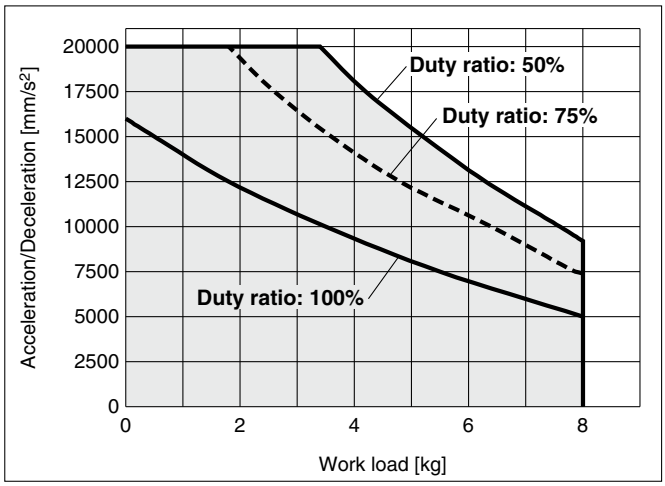

LEFS25□□B/Ball Screw Drive

Horizontal

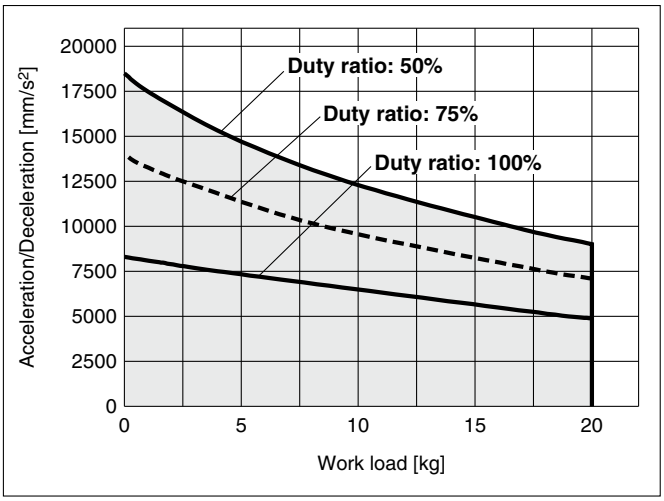

LEFS25□□B/Ball Screw Drive

Vertical

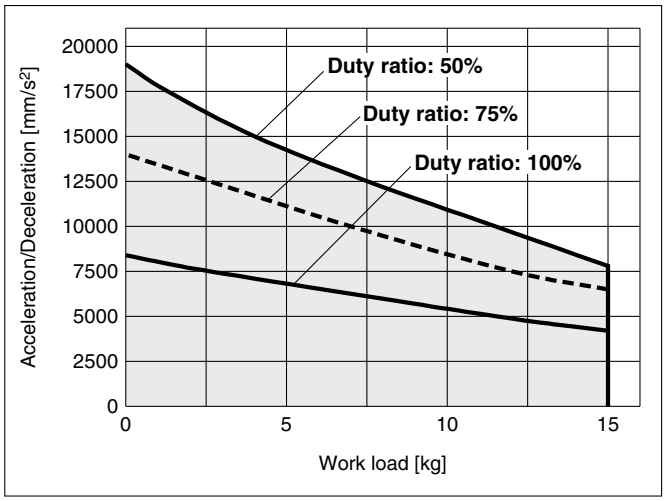

Work Load–Acceleration/Deceleration Graph (Guide)

LEFS32□□H/Ball Screw Drive

Horizontal

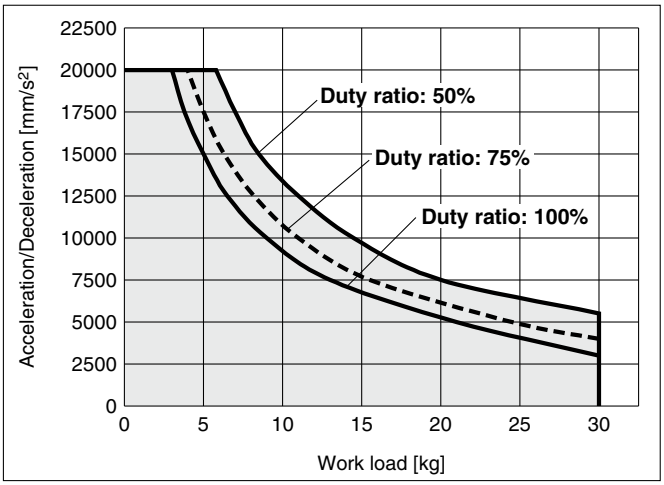

LEFS32□□H/Ball Screw Drive

Vertical

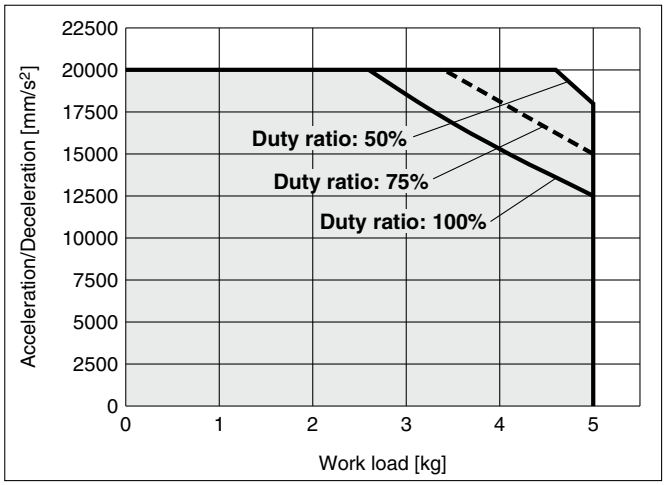

LEFS32□□A/Ball Screw Drive

Horizontal

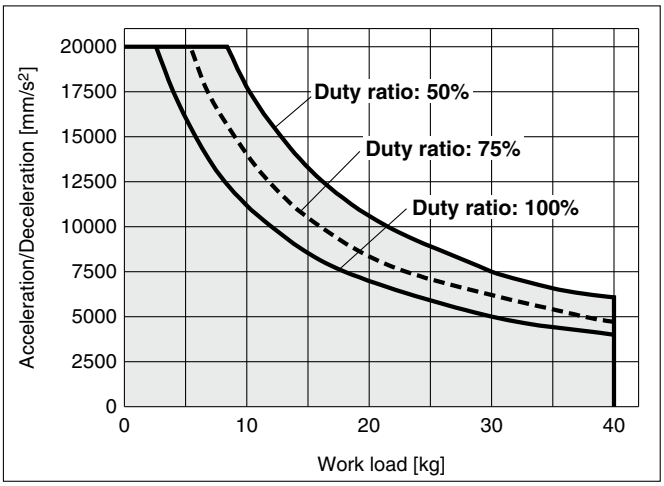

LEFS32□□A/Ball Screw Drive

Vertical

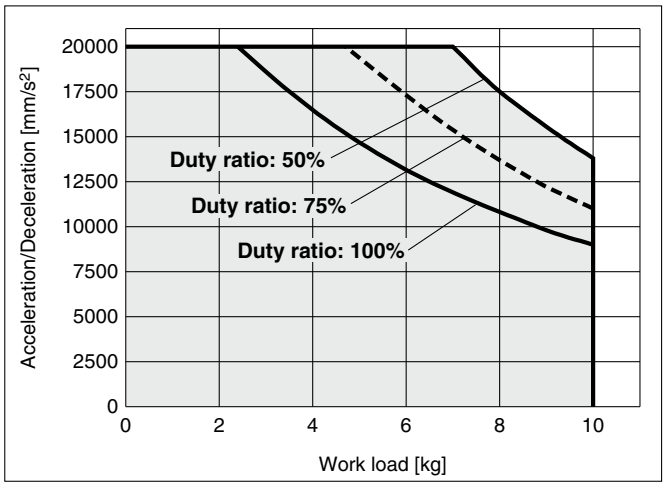

LEFS32□□B/Ball Screw Drive

Horizontal

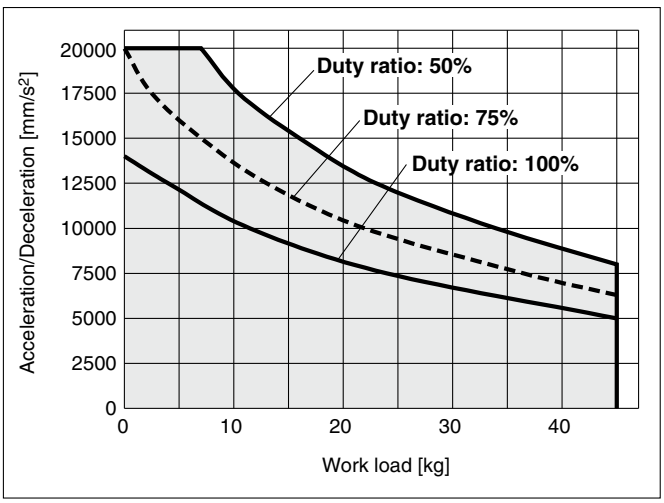

LEFS32□□B/Ball Screw Drive

Vertical

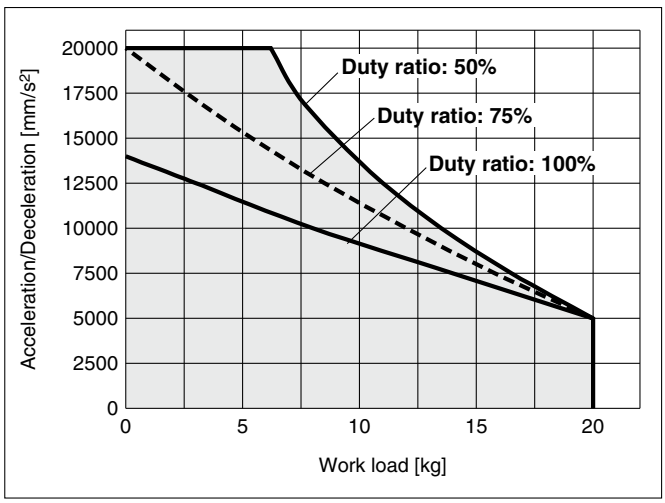

Work Load–Acceleration/Deceleration Graph (Guide)

LEFS40□□H/Ball Screw Drive

Horizontal

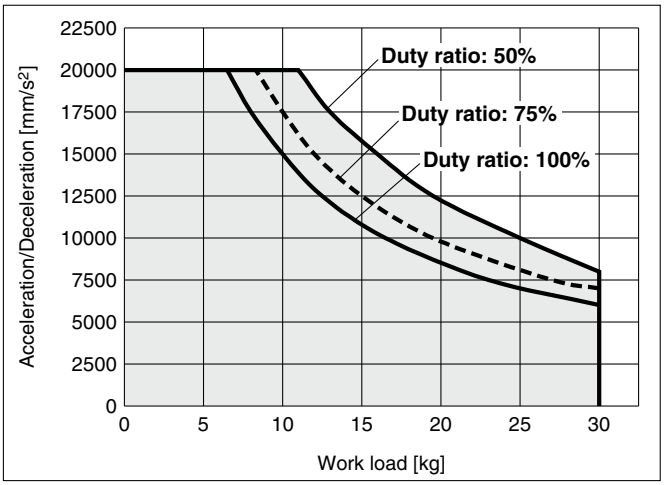

LEFS40□□H/Ball Screw Drive

Vertical

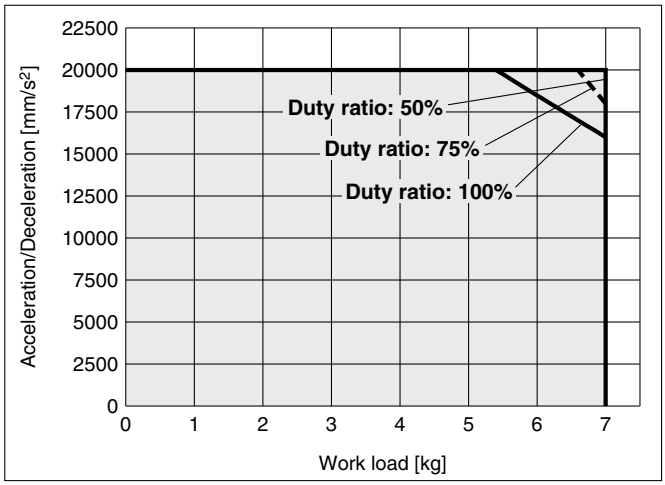

LEFS40□□A/Ball Screw Drive

Horizontal

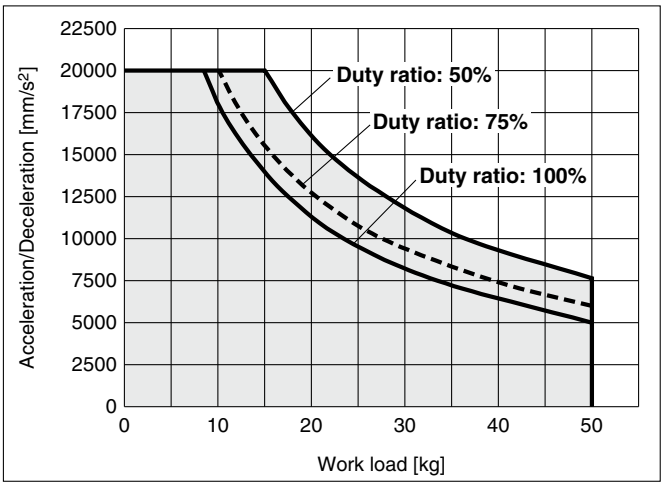

LEFS40□□A/Ball Screw Drive

Vertical

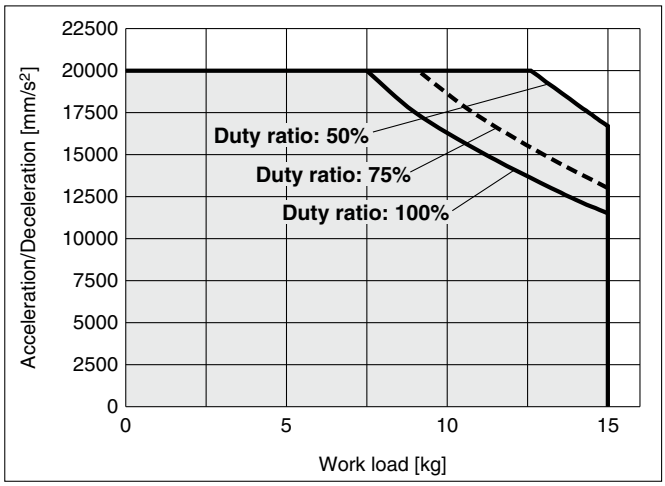

LEFS40□□B/Ball Screw Drive

Horizontal

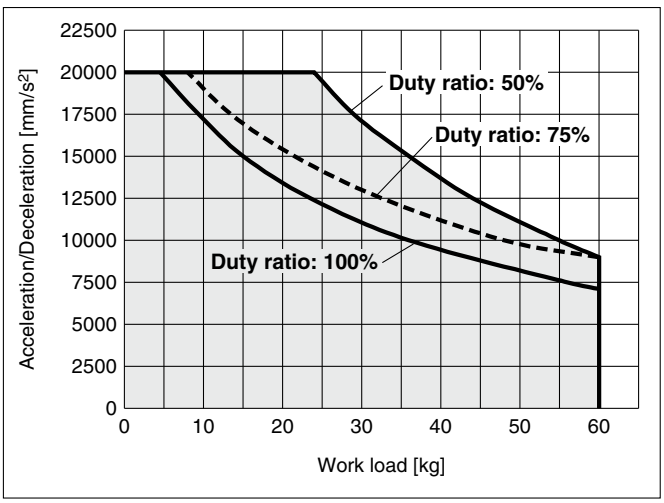

LEFS40□□B/Ball Screw Drive

Vertical

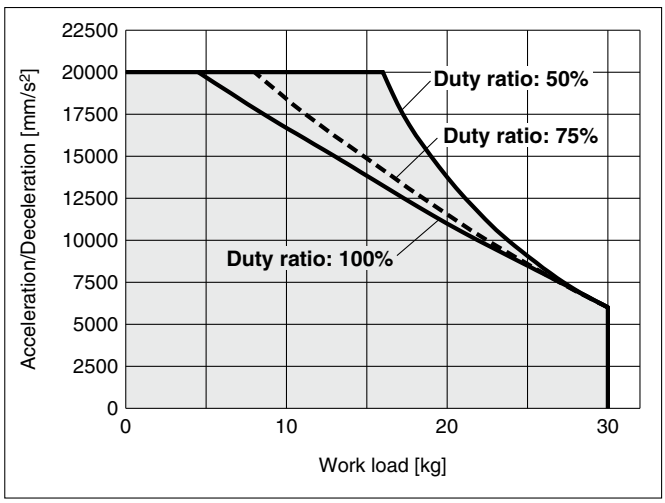

Dynamic Allowable Moment

* This graph shows the amount of allowable overhang (guide unit) when the center of gravity of the workpiece overhangs in one direction. When selecting the overhang, refer to the "Calculation of Guide Load Factor" or the Electric Actuator Model Selection Software for confirmation: https://www.smcworld.com

Acceleration/Deceleration ——1000 mm/s² — — —3000 mm/s² ·····5000 mm/s² —·—·—10000 mm/s² - - - - 20000 mm/s²

Orientation	Load overhanging direction **m** : Work load [kg] **Me**: Allowable moment [N·m] **L** : Overhang to the work load center of gravity [mm]		Model		
			LEFS25	**LEFS32**	**LEFS40**
Horizontal/Bottom	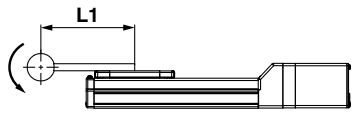	X	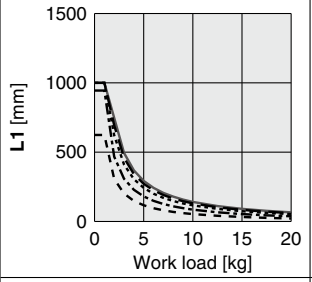	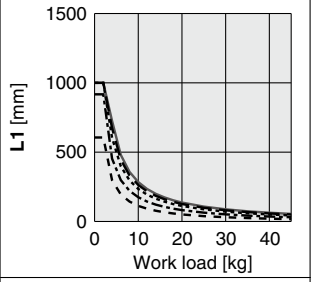	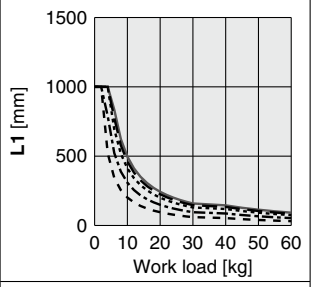
	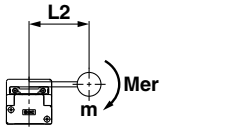	Y	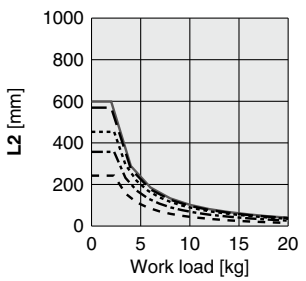	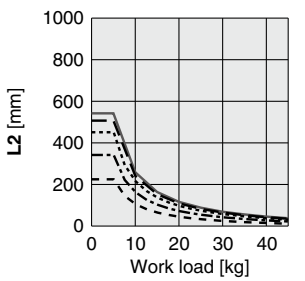	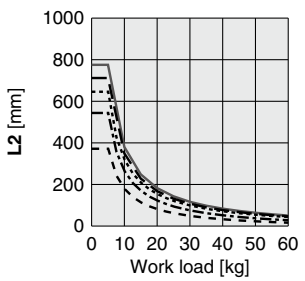
	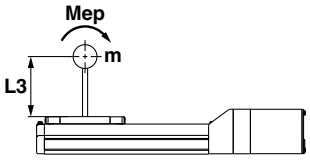	Z	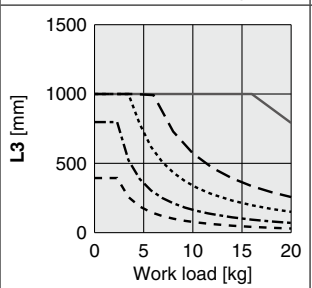	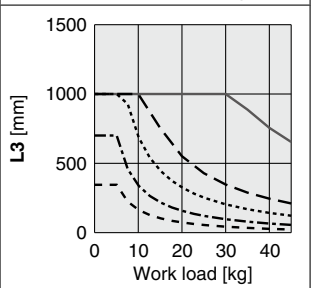	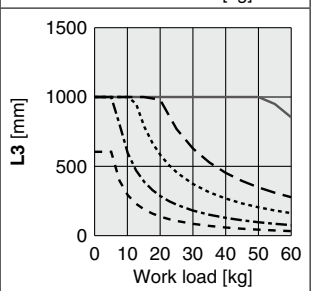
Wall	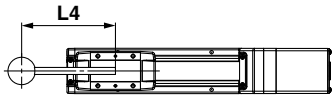	X	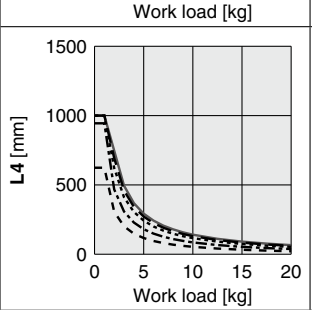	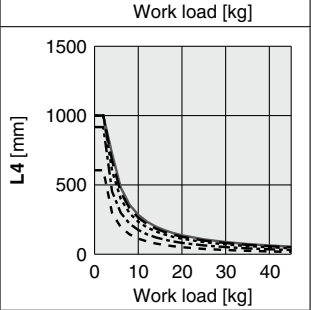	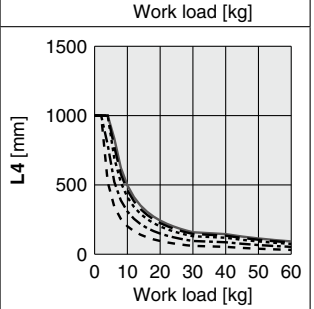
	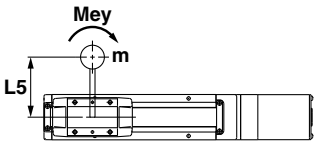	Y	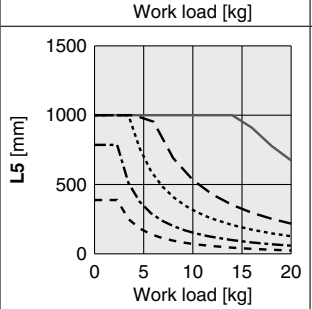	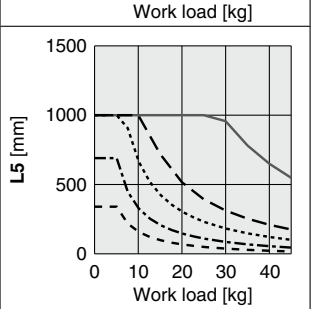	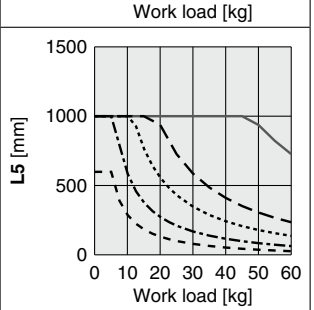
	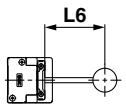	Z	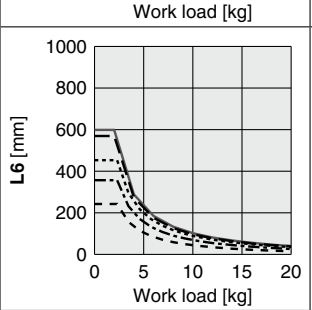	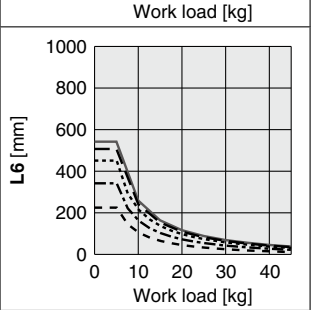	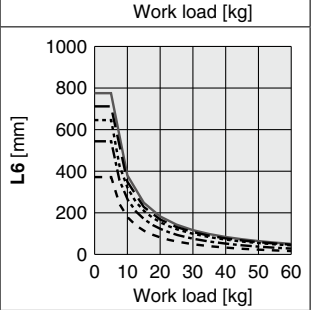

Dynamic Allowable Moment

∗ This graph shows the amount of allowable overhang (guide unit) when the center of gravity of the workpiece overhangs in one direction. When selecting the overhang, refer to the "Calculation of Guide Load Factor" or the Electric Actuator Model Selection Software for confirmation: https://www.smcworld.com

Acceleration/Deceleration ——1000 mm/s² — — —3000 mm/s² ·····5000 mm/s² –·–·–10000 mm/s² - - - - 20000 mm/s²

Orientation	Load overhanging direction **m** : Work load [kg] **Me**: Allowable moment [N·m] **L** : Overhang to the work load center of gravity [mm]		Model: LEFS25	Model: LEFS32	Model: LEFS40
Vertical	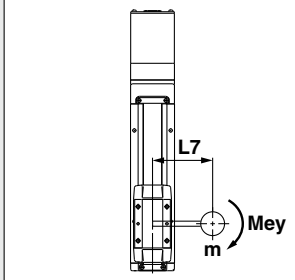	Y	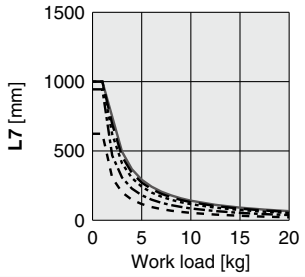	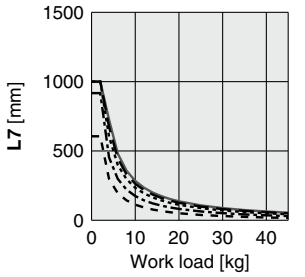	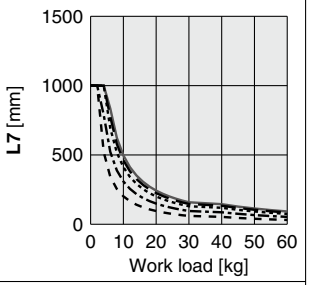
	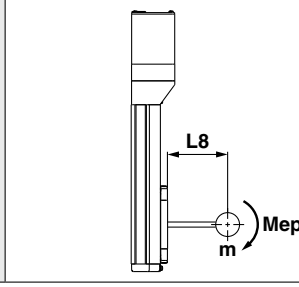	Z	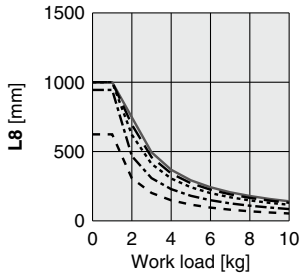	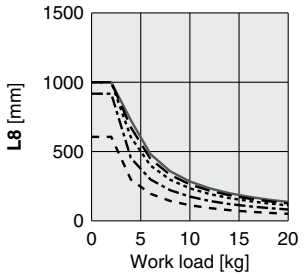	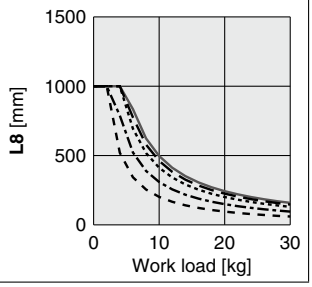

Calculation of Guide Load Factor

1. Decide operating conditions.
   Model: LEFS
   Size: 25/32/40
   Mounting orientation: Horizontal/Bottom/Wall/Vertical
   Acceleration [mm/s²]: **a**
   Work load [kg]: **m**
   Work load center position [mm]: **Xc/Yc/Zc**
2. Select the target graph while referencing the model, size, and mounting orientation.
3. Based on the acceleration and work load, find the overhang [mm]: **Lx/Ly/Lz** from the graph.
4. Calculate the load factor for each direction.
   α**x = Xc/Lx**, α**y = Yc/Ly**, α**z = Zc/Lz**
5. Confirm the total of α**x**, α**y**, and α**z** is 1 or less.
   α**x + αy + αz ≤ 1**
   When 1 is exceeded, please consider a reduction of acceleration and work load, or a change of the work load center position and series.

Mounting orientation

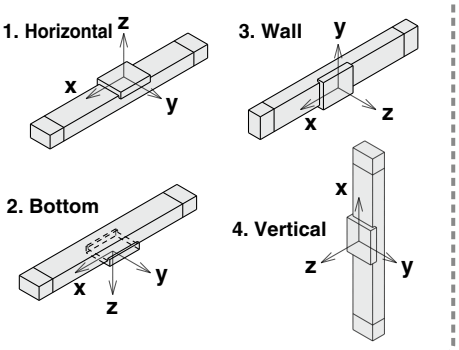

Example

1. Operating conditions
   Model: LEFS40
   Size: 40
   Mounting orientation: Horizontal
   Acceleration [mm/s²]: 3000
   Work load [kg]: 20
   Work load center position [mm]: **Xc = 0**, **Yc = 50**, **Zc = 200**
2. Select the graphs for horizontal of the LEFS40 on page 44.
3. **Lx = 250 mm**, **Ly = 180 mm**, **Lz = 1000 mm**
4. The load factor for each direction can be found as follows.
   αx = 0/250 = 0
   αy = 50/180 = 0.27
   αz = 200/1000 = 0.2
5. **αx + αy + αz = 0.47 ≤ 1**

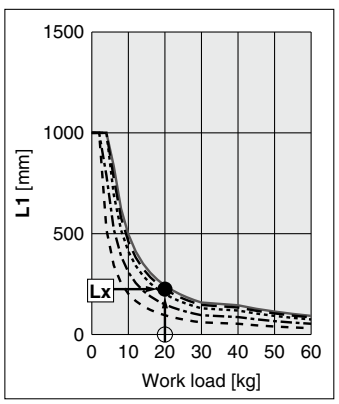

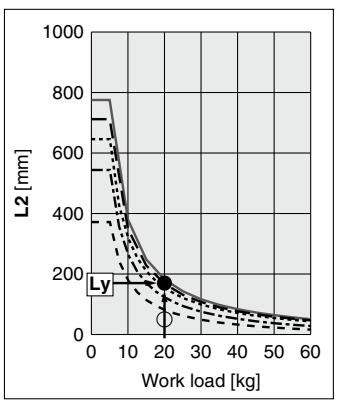

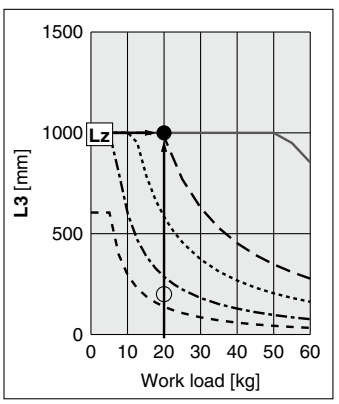

Table Accuracy (Reference Value)

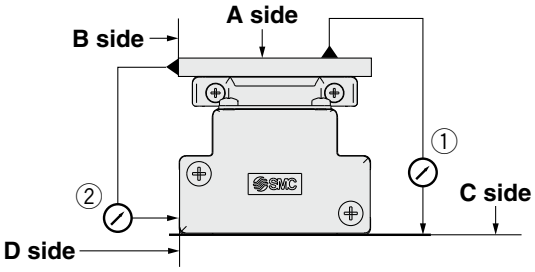

Model	Traveling parallelism [mm] (Every 300 mm)	
	① C side traveling parallelism to A side	② D side traveling parallelism to B side
LEFS25	0.05	0.03
LEFS32	0.05	0.03
LEFS40	0.05	0.03

∗ Traveling parallelism does not include the mounting surface accuracy.

Table Displacement (Reference Value)

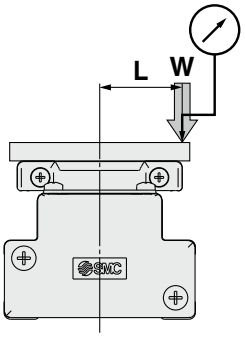

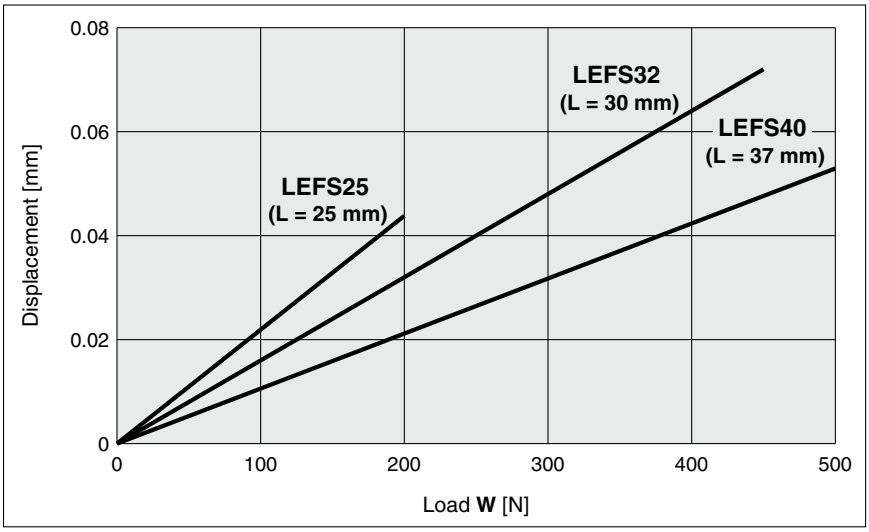

∗ This displacement is measured when a 15 mm aluminum plate is mounted and fixed on the table.
∗ Check the clearance and play of the guide separately.

Overhang Displacement Due to Table Clearance (Initial Reference Value)

Basic type

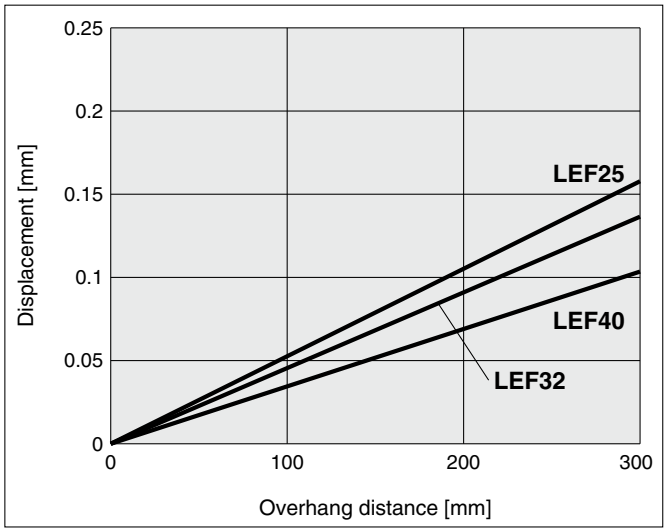

High-precision type

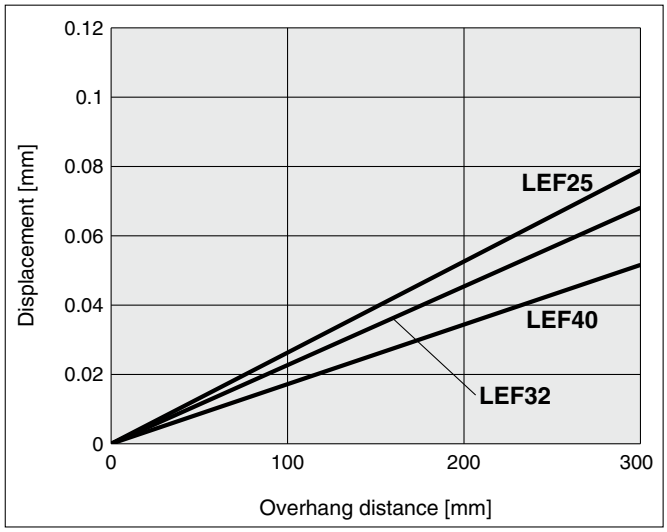

Model Selection

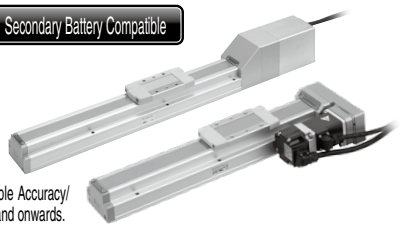

LECS□ Series ▶ p. 78 | LEFS Series ▶ p. 94 | 11-LEFS Series ▶ p. 646 | 25A-LEFS Series ▶ p. 669

Selection Procedure

* The Work Load-Acceleration/Deceleration Graph, Dynamic Allowable Moment, Calculation of Guide Load Factor, and Table Accuracy/Displacement/Overhang Displacement are the same as those of the LECS□ AC servo motor. For details, refer to page 41 and onwards.

Step 1 Check the work load–speed. → **Step 2** Check the cycle time. → **Step 3** Check the allowable moment.

Selection Example

Operating conditions

- Workpiece mass: 45 [kg]
- Speed: 300 [mm/s]
- Acceleration/Deceleration: 3000 [mm/s²]
- Stroke: 200 [mm]
- Mounting position: Horizontal upward
- Workpiece mounting condition:

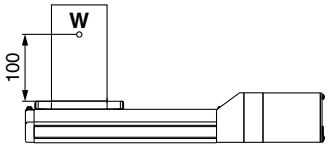

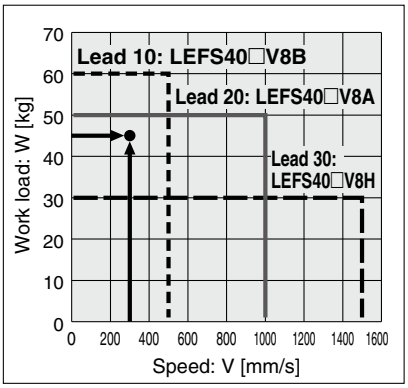

<Speed–Work load graph> (LEFS40)

Step 1 Check the work load–speed. <Speed–Work load graph> (Page 48)

Select a model based on the workpiece mass and speed while referencing the speed–work load graph.

Selection example) The **LEFS40V8B-200** can be temporarily selected as a possible candidate based on the graph shown on the right side.

Step 2 Check the cycle time.

Calculate **the cycle time** using the following calculation method.

Cycle time:

T can be found from the following equation.

$$T = T1 + T2 + T3 + T4 \text{ [s]}$$

- T1: Acceleration time and T3: Deceleration time can be found by the following equation.

$$T1 = V/a1 \text{ [s]} \qquad T3 = V/a2 \text{ [s]}$$

- T2: Constant speed time can be found from the following equation.

$$T2 = \frac{L - 0.5 \cdot V \cdot (T1 + T3)}{V} \text{ [s]}$$

- T4: Settling time varies depending on the motor type and load. The value below is recommended.

$$T4 = 0.05 \text{ [s]}$$

Calculation example)
T1 to T4 can be calculated as follows.

$T1 = V/a1 = 300/3000 = 0.1$ [s],

$T3 = V/a2 = 300/3000 = 0.1$ [s]

$$T2 = \frac{L - 0.5 \cdot V \cdot (T1 + T3)}{V} = \frac{200 - 0.5 \cdot 300 \cdot (0.1 + 0.1)}{300} = 0.57 \text{ [s]}$$

$T4 = 0.05$ [s]

The cycle time can be found as follows.

$T = T1 + T2 + T3 + T4$

$= 0.1 + 0.57 + 0.1 + 0.05$

$=$ **0.82 [s]**

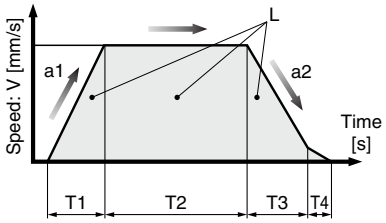

L : Stroke [mm] ··· (Operating condition)
V : Speed [mm/s] ··· (Operating condition)
a1: Acceleration [mm/s²] ··· (Operating condition)
a2: Deceleration [mm/s²] ··· (Operating condition)

T1: Acceleration time [s]
Time until reaching the set speed
T2: Constant speed time [s]
Time while the actuator is operating at a constant speed
T3: Deceleration time [s]
Time from the beginning of the constant speed operation to stop
T4: Settling time [s]
Time until positioning is completed

Step 3 Check the allowable moment. <Static allowable moment> (page 35) <Dynamic allowable moment> (page 44)

Confirm the moment that applies to the actuator is within the allowable range for both static and dynamic conditions.

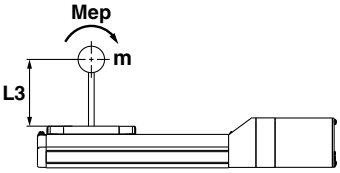

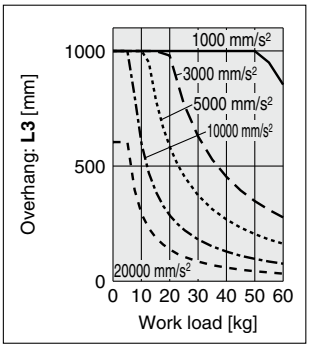

Based on the above calculation result, the LEFS40V8B-200 should be selected.

Speed–Work Load Graph/Conditions for "Regenerative Resistor" (Guide)

* The allowable speed is restricted depending on the stroke. Select it by referring to the "Allowable Stroke Speed" below.

LEFS25/Ball Screw Drive

Horizontal

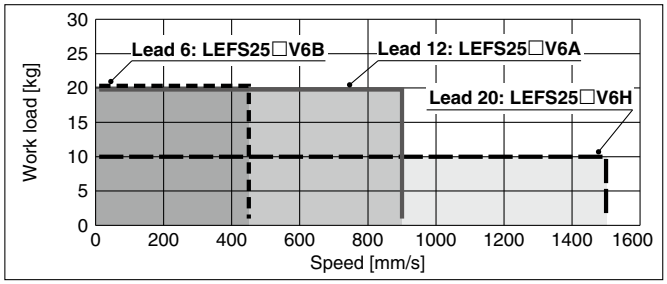

Vertical

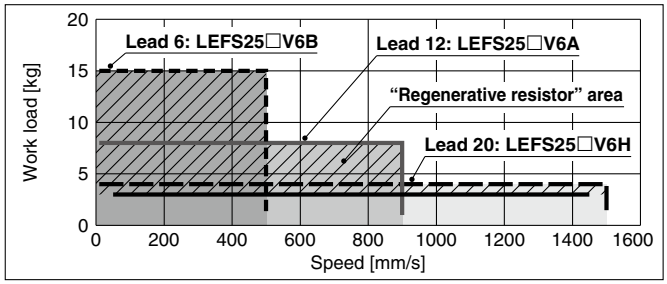

LEFS32/Ball Screw Drive

Horizontal

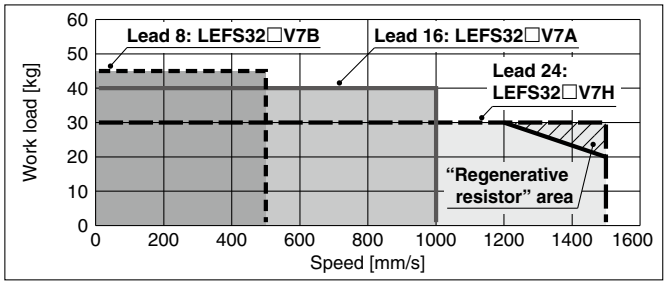

Vertical

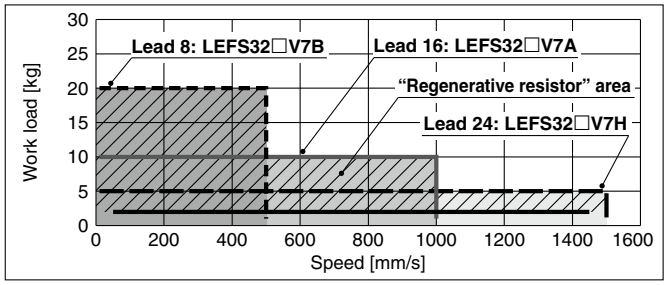

LEFS40/Ball Screw Drive

Horizontal

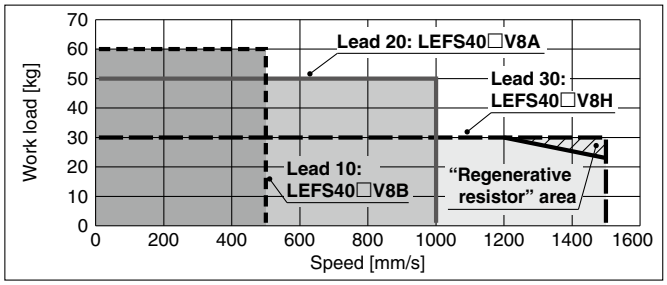

Vertical

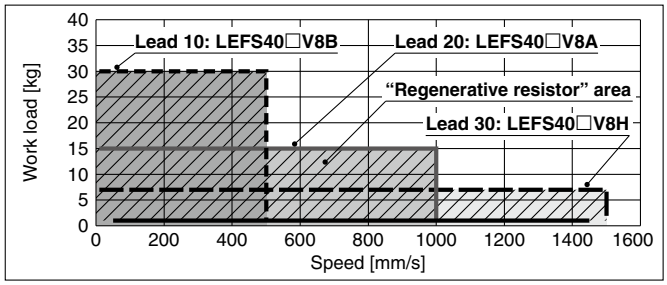

"Regenerative resistor" area

* When using the actuator in the "Regenerative resistor" area, download the "AC servo drive capacity selection program/SigmaJunmaSize+" from the SMC website. Then, calculate the necessary regenerative resistor capacity to prepare an appropriate external regenerative resistor.
* Regenerative resistor should be provided by the customer.

Applicable Motors/Drivers

Model	Applicable model	
	Motor	Servopack (SMC driver)
LEFS25□	SGMJV-01A3A	SGDV-R90A11□ (LECYM2-V5) SGDV-R90A21□ (LECYU2-V5)
LEFS32□	SGMJV-02A3A	SGDV-1R6A11□ (LECYM2-V7) SGDV-1R6A21□ (LECYU2-V7)
LEFS40□	SGMJV-04A3A	SGDV-2R8A11□ (LECYM2-V8) SGDV-2R8A21□ (LECYU2-V8)

Allowable Stroke Speed

[mm/s]

Model	AC servo motor	Lead		Stroke [mm]											
		Symbol	[mm]	Up to 100	Up to 200	Up to 300	Up to 400	Up to 500	Up to 600	Up to 700	Up to 800	Up to 900	Up to 1000	Up to 1100	Up to 1200
LEFS25	100 W /□40	H	20	1500				1200	900	700	550	—	—	—	—
		A	12	900				720	540	420	330	—	—	—	—
		B	6	450				360	270	210	160	—	—	—	—
		(Motor rotation speed)		(4500 rpm)				(3650 rpm)	(2700 rpm)	(2100 rpm)	(1650 rpm)	—	—	—	—
LEFS32	200 W /□60	H	24	1500					1200	930	750	610	510	—	—
		A	16	1000					800	620	500	410	340	—	—
		B	8	500					400	310	250	200	170	—	—
		(Motor rotation speed)		(3750 rpm)					(3000 rpm)	(2325 rpm)	(1875 rpm)	(1537 rpm)	(1275 rpm)	—	—
LEFS40	400 W /□60	H	30	—	1500					1410	1140	930	780	500	500
		A	20	—	1000					940	760	620	520	440	380
		B	10	—	500					470	380	310	260	220	190
		(Motor rotation speed)		—	(3000 rpm)					(2820 rpm)	(2280 rpm)	(1860 rpm)	(1560 rpm)	(1320 rpm)	(1140 rpm)

Model Selection

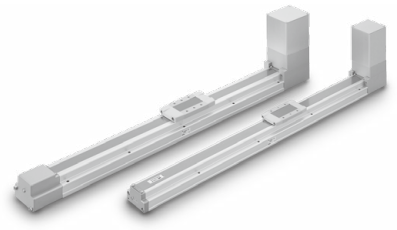

LECS□ Series ▶ p. 124 LECY□ Series ▶ p. 140

Selection Procedure

Step 1 Check the work load–speed. → **Step 2** Check the cycle time. → **Step 3** Check the allowable moment.

Selection Example

Operating conditions

- Workpiece mass: 20 [kg]
- Speed: 1500 [mm/s]
- Acceleration/Deceleration: 3000 [mm/s²]
- Stroke: 2000 [mm]
- Mounting position: Horizontal upward
- Workpiece mounting condition:

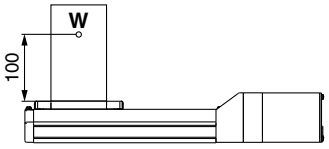

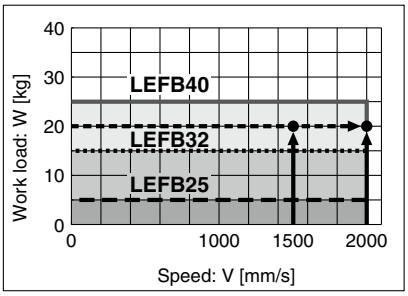

<Speed–Work load graph> (LEFB40)

Step 1 Check the work load–speed. <Speed–Work load graph> (Page 50)

Select a model based on the workpiece mass and speed while referencing the speed–work load graph.

Selection example) The **LEFB40S4S-2000** can be temporarily selected as a possible candidate based on the graph shown on the right side.

Step 2 Check the cycle time.

Calculate **the cycle time** using the following calculation method.

Cycle time:

T can be found from the following equation.

$$T = T1 + T2 + T3 + T4 \text{ [s]}$$

- T1: Acceleration time and T3: Deceleration time can be found by the following equation.

$$T1 = V/a1 \text{ [s]} \qquad T3 = V/a2 \text{ [s]}$$

- T2: Constant speed time can be found from the following equation.

$$T2 = \frac{L - 0.5 \cdot V \cdot (T1 + T3)}{V} \text{ [s]}$$

- T4: Settling time varies depending on the motor type and load. The value below is recommended.

$$T4 = 0.05 \text{ [s]}$$

Calculation example)
T1 to T4 can be calculated as follows.

$T1 = V/a1 = 1500/3000 = 0.5$ [s],

$T3 = V/a2 = 1500/3000 = 0.5$ [s]

$$T2 = \frac{L - 0.5 \cdot V \cdot (T1 + T3)}{V} = \frac{2000 - 0.5 \cdot 1500 \cdot (0.5 + 0.5)}{1500} = 0.83 \text{ [s]}$$

$T4 = 0.05$ [s]

The cycle time can be found as follows.

$T = T1 + T2 + T3 + T4$

$= 0.5 + 0.83 + 0.5 + 0.05$

$=$ **1.88 [s]**

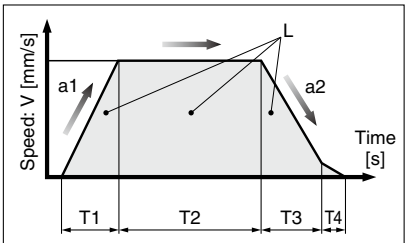

L : Stroke [mm] ··· (Operating condition)
V : Speed [mm/s] ··· (Operating condition)
a1: Acceleration [mm/s²] ··· (Operating condition)
a2: Deceleration [mm/s²] ··· (Operating condition)

T1: Acceleration time [s]
Time until reaching the set speed
T2: Constant speed time [s]
Time while the actuator is operating at a constant speed
T3: Deceleration time [s]
Time from the beginning of the constant speed operation to stop
T4: Settling time [s]
Time until positioning is completed

Step 3 Check the allowable moment. <Static allowable moment> (page 35) <Dynamic allowable moment> (page 51)

Confirm the moment that applies to the actuator is within the allowable range for both static and dynamic conditions.

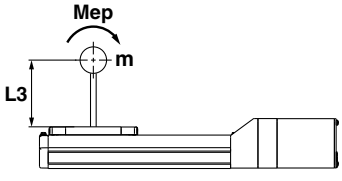

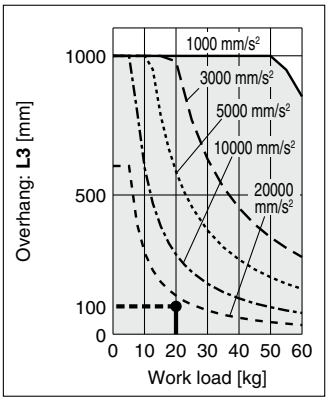

Based on the above calculation result, the LEFB40S4S-2000 should be selected.

Speed–Work Load Graph/Required Conditions for "Regeneration Option"(Guide)

LEFB□/Belt Drive

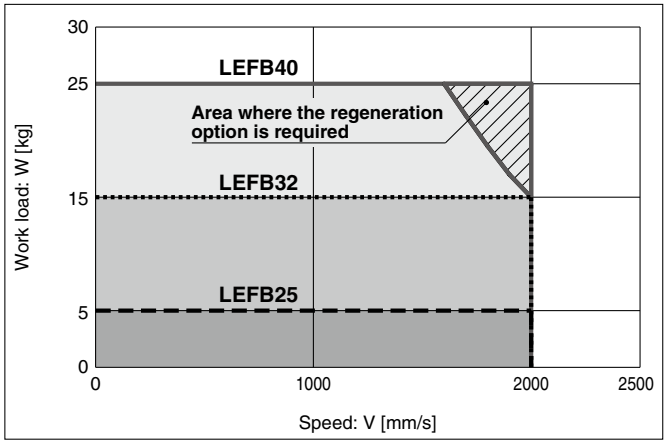

∗ The shaded area in the graph requires the regeneration option (LEC-MR-RB-032).

Cycle Time Graph (Guide)

LEFB□/Belt Drive

LEFB25/32/40

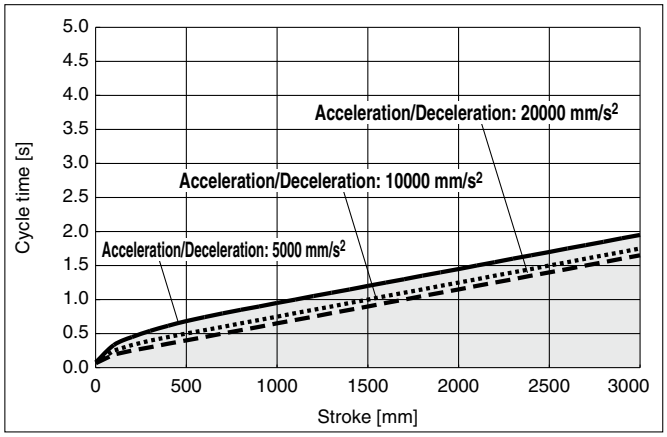

∗ Cycle time is for when maximum speed.
∗ Maximum stroke: LEFB25: 2000 mm
LEFB32: 2500 mm
LEFB40: 3000 mm

"Regenerative resistor" area

∗ When using the actuator in the "Regenerative resistor" area, download the "AC servo drive capacity selection program/SigmaJunmaSize+" from the SMC website. Then, calculate the necessary regenerative resistor capacity to prepare an appropriate external regenerative resistor.
∗ Regenerative resistor should be provided by the customer.

Work Load–Acceleration/Deceleration Graph (Guide)

LEFB□/Belt Drive

LEFB25 (Duty ratio)

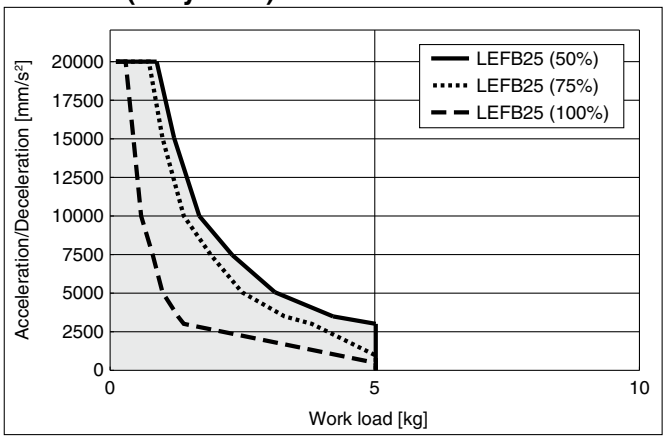

LEFB32 (Duty ratio)

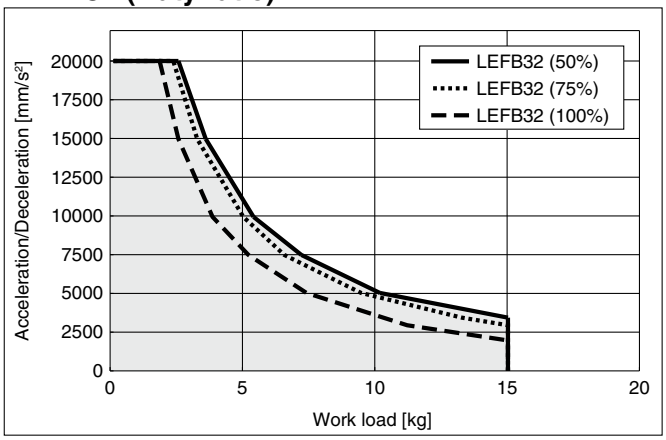

LEFB40 (Duty ratio)

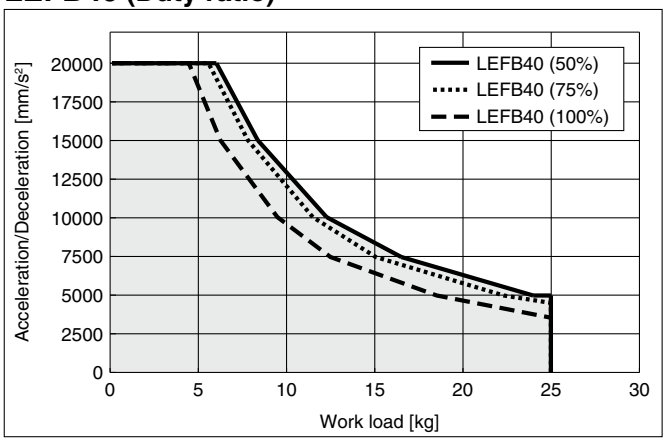

Dynamic Allowable Moment

* This graph shows the amount of allowable overhang (guide unit) when the center of gravity of the workpiece overhangs in one direction. When selecting the overhang, refer to the "Calculation of Guide Load Factor" or the Electric Actuator Model Selection Software for confirmation: https://www.smcworld.com

Acceleration/Deceleration ——1000 mm/s² — — —3000 mm/s² ·····5000 mm/s² —·—·—10000 mm/s² - - - - 20000 mm/s²

Orientation	Load overhanging direction **m** : Work load [kg] **Me**: Allowable moment [N·m] **L** : Overhang to the work load center of gravity [mm]		Model LEFB25	Model LEFB32	Model LEFB40
Horizontal/Bottom	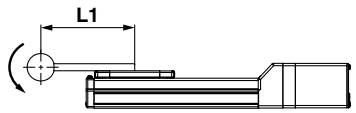	X	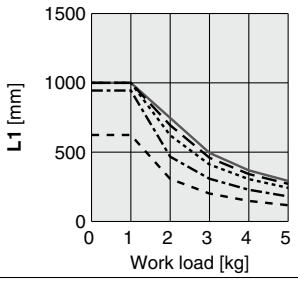	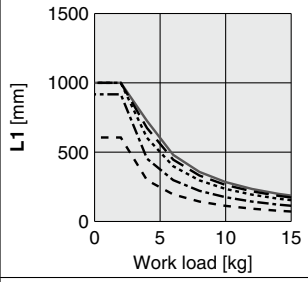	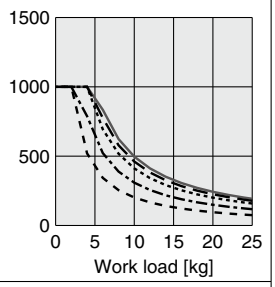
	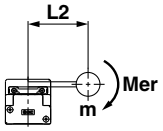	Y	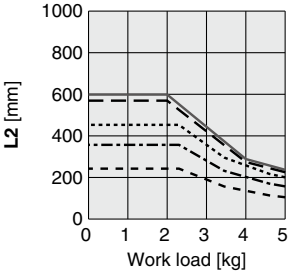	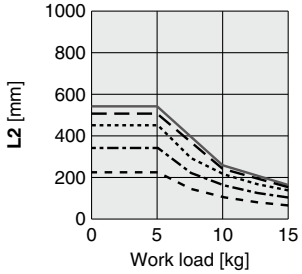	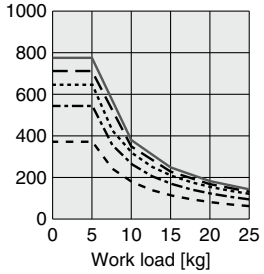
	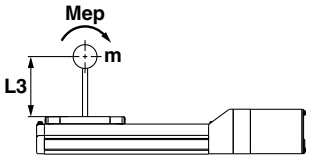	Z	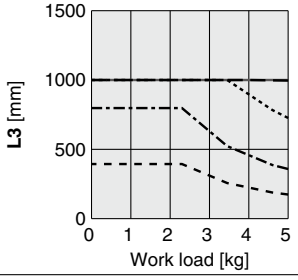	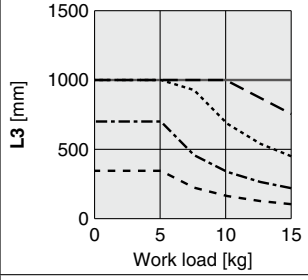	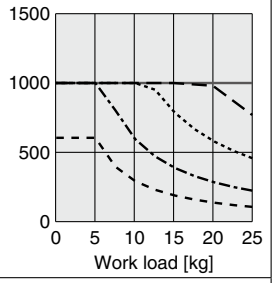
Wall	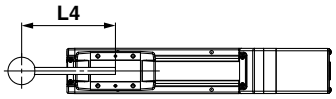	X	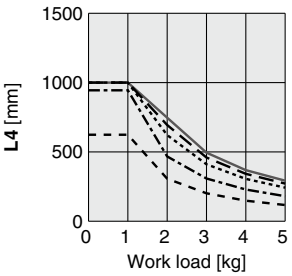	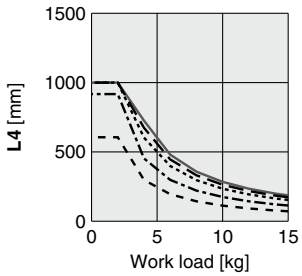	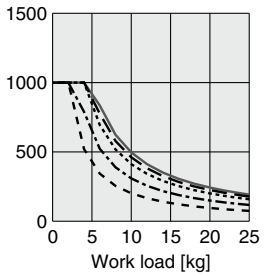
	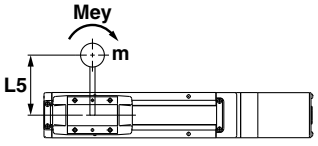	Y	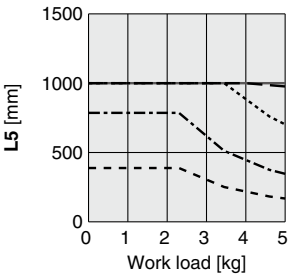	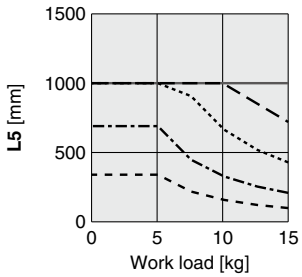	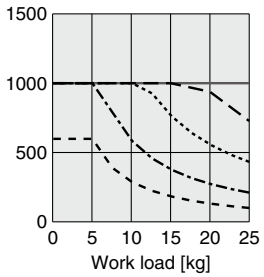
	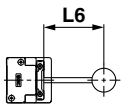	Z	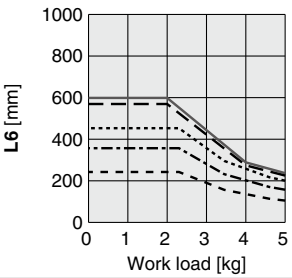	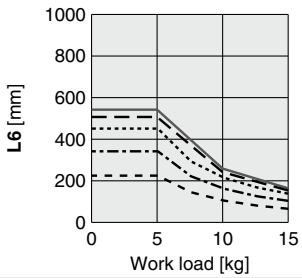	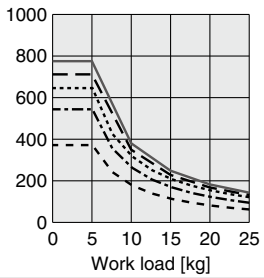

Calculation of Guide Load Factor

1. Decide operating conditions.
   Model: LEFB
   Size: 25/32/40
   Mounting orientation: Horizontal/Bottom/Wall
   Acceleration [mm/s²]: **a**
   Work load [kg]: **m**
   Work load center position [mm]: **Xc/Yc/Zc**
2. Select the target graph while referencing the model, size, and mounting orientation.
3. Based on the acceleration and work load, find the overhang [mm]: **Lx/Ly/Lz** from the graph.
4. Calculate the load factor for each direction.
   α**x = Xc/Lx**, α**y = Yc/Ly**, α**z = Zc/Lz**
5. Confirm the total of α**x**, α**y**, and α**z** is 1 or less.
   α**x + αy + αz ≤ 1**
   When 1 is exceeded, please consider a reduction of acceleration and work load, or a change of the work load center position and series.

Mounting orientation

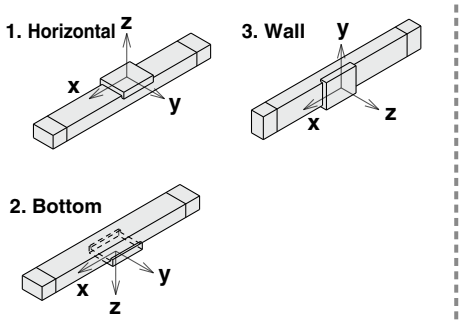

Example

1. Operating conditions
   Model: LEFB40
   Size: 40
   Mounting orientation: Horizontal
   Acceleration [mm/s²]: 3000
   Work load [kg]: 20
   Work load center position [mm]: **Xc = 0**, **Yc = 50**, **Zc = 200**
2. Select the graphs for horizontal of the LEFB40 on page 51.
3. **Lx = 250 mm**, **Ly = 180 mm**, **Lz = 1000 mm**
4. The load factor for each direction can be found as follows.
   α**x = 0/250 = 0**
   α**y = 50/180 = 0.27**
   α**z = 200/1000 = 0.2**
5. α**x + αy + αz = 0.47 ≤ 1**

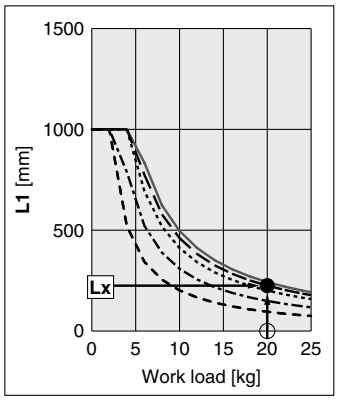

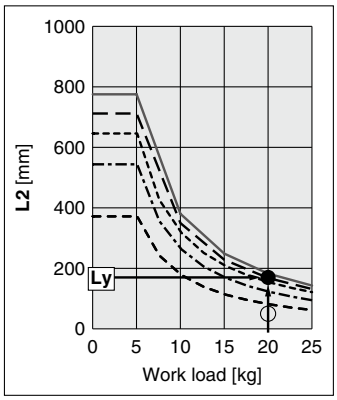

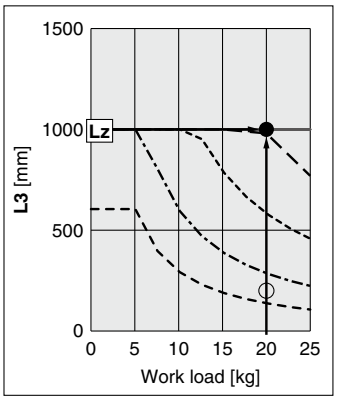

Table Accuracy (Reference Value)

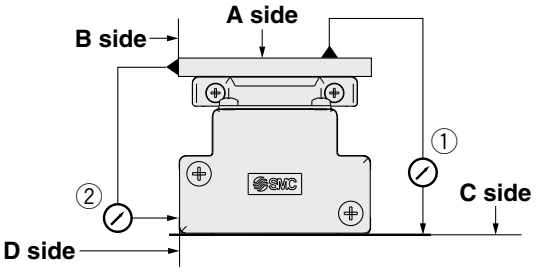

Model	Traveling parallelism [mm] (Every 300 mm)	
	① C side traveling parallelism to A side	② D side traveling parallelism to B side
LEFB25	0.05	0.03
LEFB32	0.05	0.03
LEFB40	0.05	0.03

∗ Traveling parallelism does not include the mounting surface accuracy. (Excludes when the stroke exceeds 2000 mm)

Table Displacement (Reference Value)

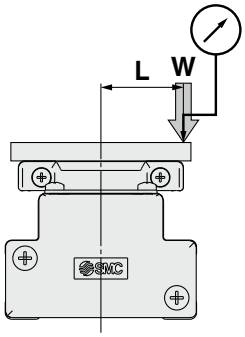

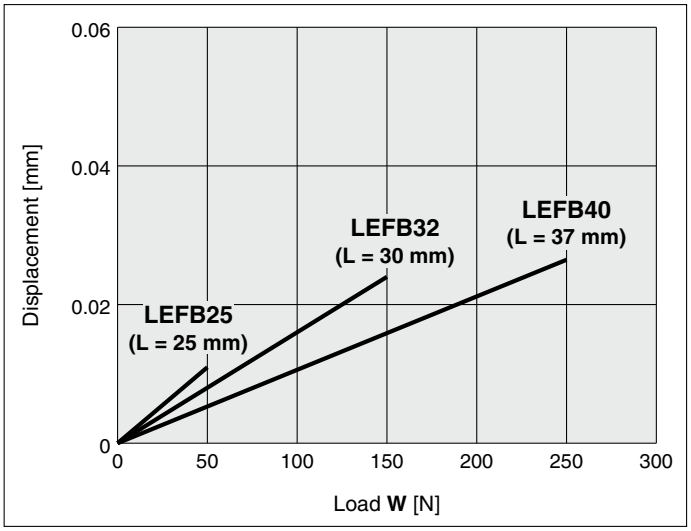

∗ This displacement is measured when a 15 mm aluminum plate is mounted and fixed on the table.
∗ Check the clearance and play of the guide separately.

Overhang Displacement Due to Table Clearance (Initial Reference Value)

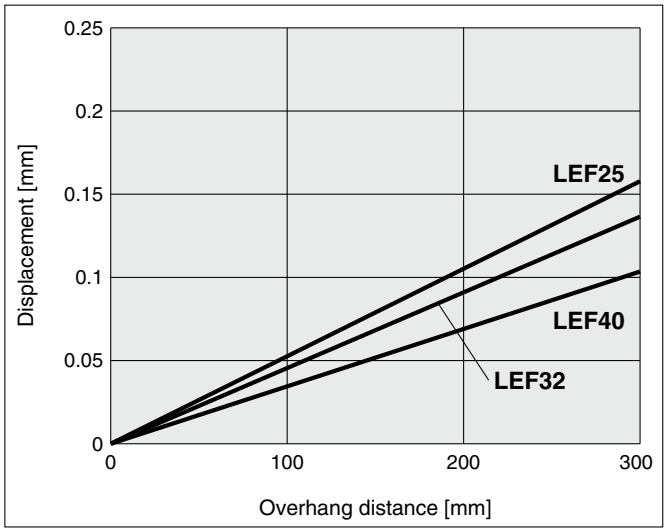

Model Selection

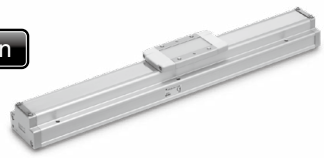

LEFG Series ▶ p. 109, 156 11-LEFG Series ▶ p. 651

Rated Load

Unit: N

Rated load	LEFG16	LEFG25	LEFG32	LEFG40
Basic dynamic rated load	6250	8950	16500	22700
Basic static rated load	8350	13900	22000	34500

Table Accuracy (Reference Value)

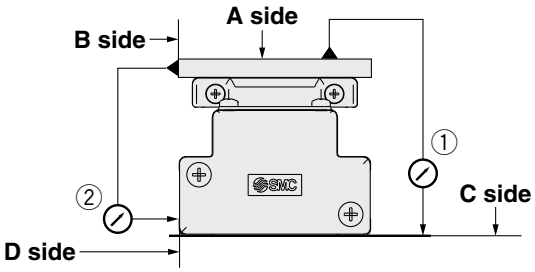

Model	Traveling parallelism [mm] (Every 300 mm)	
	① C side traveling parallelism to A side	② D side traveling parallelism to B side
LEFG16	0.05	0.03
LEFG25	0.05	0.03
LEFG32	0.05	0.03
LEFG40	0.05	0.03

∗ Traveling parallelism does not include the mounting surface accuracy. (Excludes when the stroke exceeds 2000 mm)

Table Displacement (Reference Value)

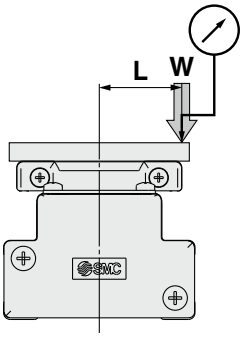

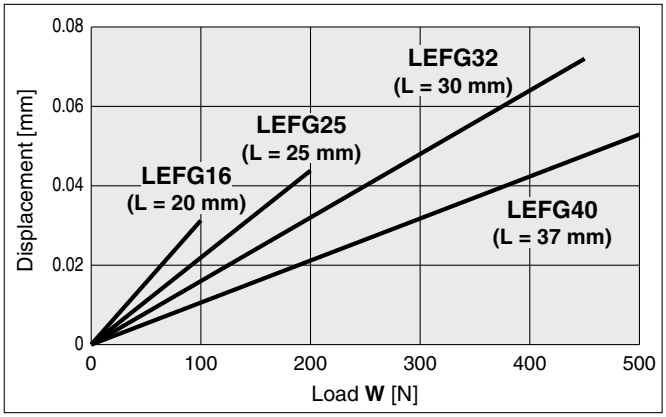

∗ This displacement is measured when a 15 mm aluminum plate is mounted and fixed on the table.
∗ Check the clearance and play of the guide separately.

Dynamic Allowable Moment

* This graph shows the amount of allowable overhang (guide unit) when the center of gravity of the workpiece overhangs in one direction. When selecting the overhang, refer to the "Calculation of Guide Load Factor" or the Electric Actuator Model Selection Software for confirmation: https://www.smcworld.com

Acceleration/Deceleration —— 1000 mm/s² — — — 3000 mm/s² ····· 5000 mm/s²

Orientation	Load overhanging direction **m** : Work load [kg] **Me**: Allowable moment [N·m] **L** : Overhang to the work load center of gravity [mm]		Model (11-)LEFG16	(11-)LEFG25	(11-)LEFG32	(11-)LEFG40
Horizontal/Bottom	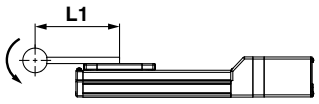	X	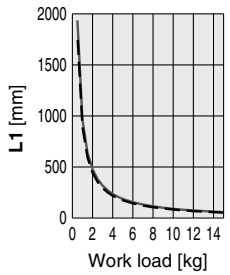	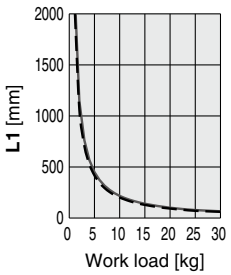	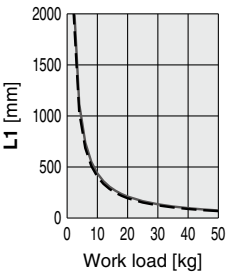	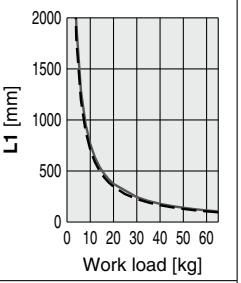
	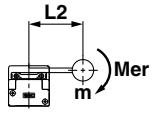	Y	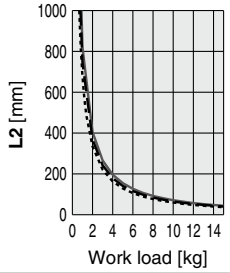	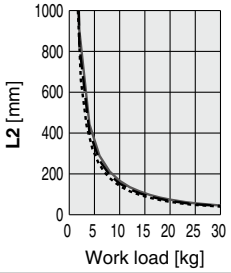	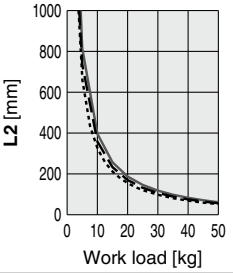	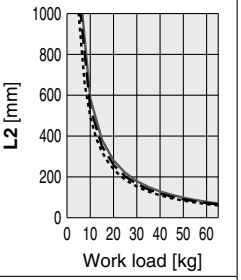
	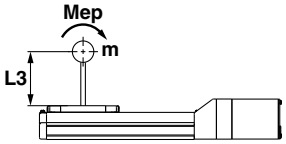	Z	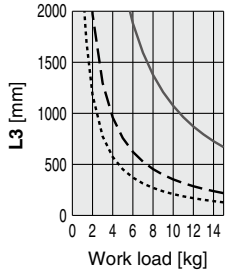	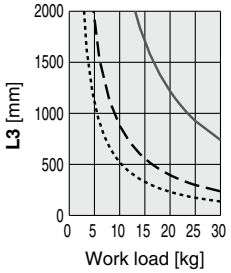	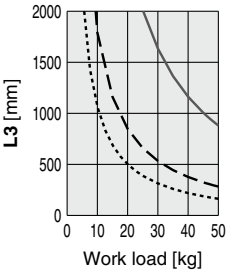	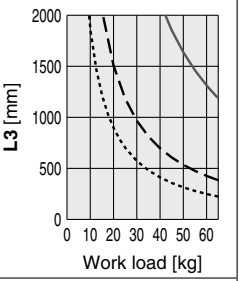
Wall	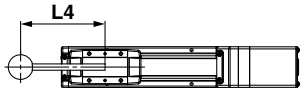	X	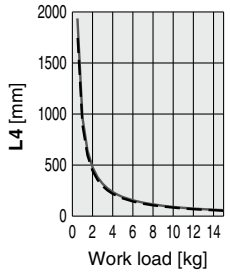	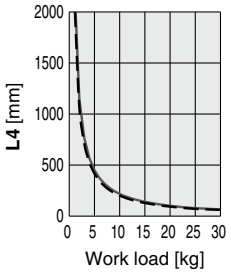	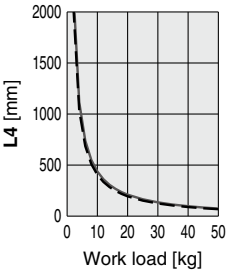	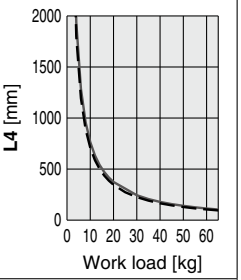
	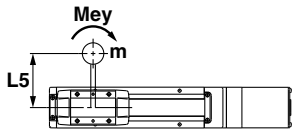	Y	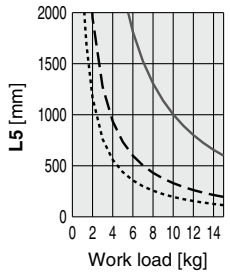	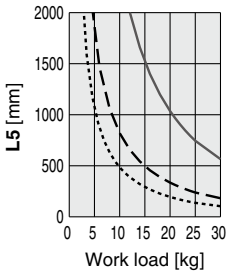	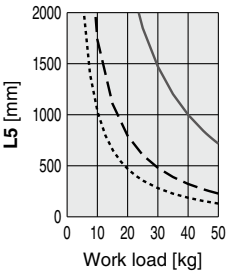	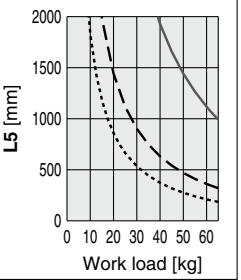
	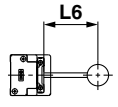	Z	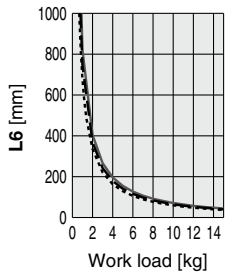	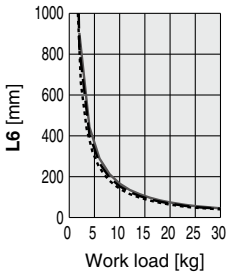	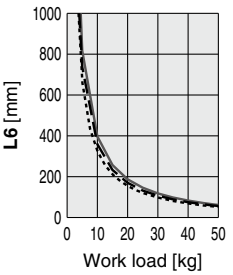	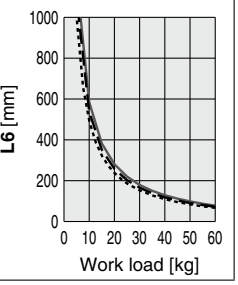

Dynamic Allowable Moment

* This graph shows the amount of allowable overhang (guide unit) when the center of gravity of the workpiece overhangs in one direction. When selecting the overhang, refer to the "Calculation of Guide Load Factor" or the Electric Actuator Model Selection Software for confirmation: https://www.smcworld.com

Acceleration/Deceleration ——1000 mm/s² — — —3000 mm/s² ·····5000 mm/s²

Orientation	Load overhanging direction **m** : Work load [kg] **Me**: Allowable moment [N·m] **L** : Overhang to the work load center of gravity [mm]		Model (11-)LEFG16	(11-)LEFG25	(11-)LEFG32	(11-)LEFG40
Vertical	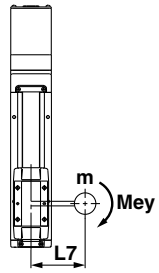	Y	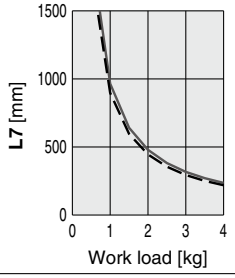	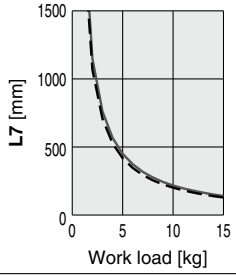	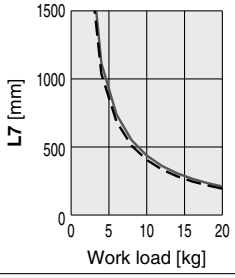	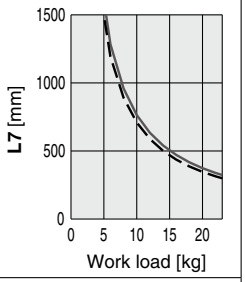
	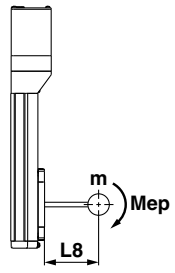	Z	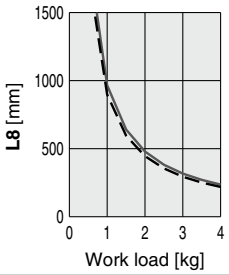	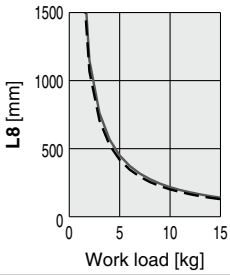	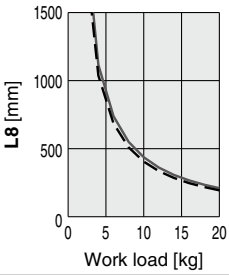	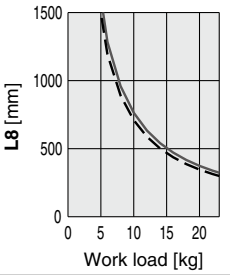

Calculation of Guide Load Factor

1. Decide operating conditions.
   Model: LEFG
   Size: 16/25/32/40
   Mounting orientation: Horizontal/Bottom/Wall/Vertical
   Acceleration [mm/s²]: **a**
   Work load [kg]: **m**
   Work load center position [mm]: **Xc/Yc/Zc**
2. Select the target graph while referencing the model, size, and mounting orientation.
3. Based on the acceleration and work load, find the overhang [mm]: **Lx/Ly/Lz** from the graph.
4. Calculate the load factor for each direction.
   $\alpha x = Xc/Lx$, $\alpha y = Yc/Ly$, $\alpha z = Zc/Lz$
5. Confirm the total of αx, αy, and αz is 1 or less.
   $\alpha x + \alpha y + \alpha z \leq 1$
   When 1 is exceeded, please consider a reduction of acceleration and work load, or a change of the work load center position and series.

Mounting orientation

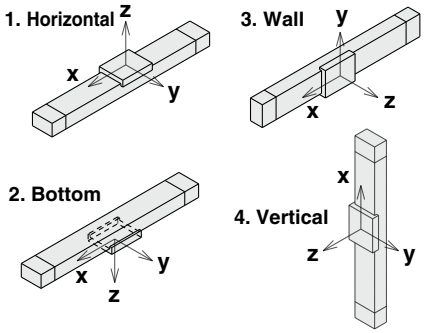

Example

1. Operating conditions
   Model: LEFG40
   Size: 40
   Mounting orientation: Horizontal
   Acceleration [mm/s²]: 3000
   Work load [kg]: 20
   Work load center position [mm]: **Xc = 0**, **Yc = 50**, **Zc = 200**
2. Select the graphs for horizontal of the (11-)LEFG40 on page 55.
3. **Lx = 400 mm**, **Ly = 250 mm**, **Lz = 1500 mm**
4. The load factor for each direction can be found as follows.
   $\alpha x = 0/400 = 0$
   $\alpha y = 50/250 = 0.2$
   $\alpha z = 200/1500 = 0.13$
5. $\alpha x + \alpha y + \alpha z = 0.33 \leq 1$

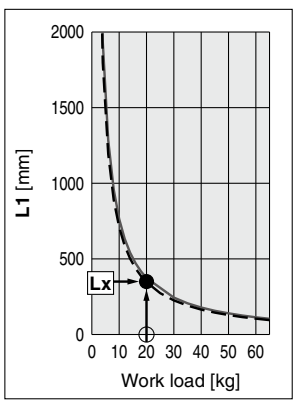

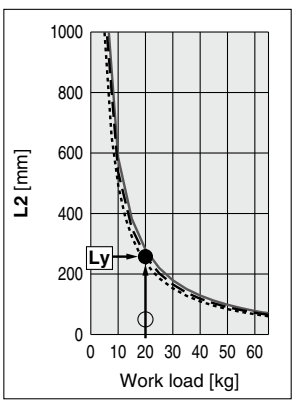

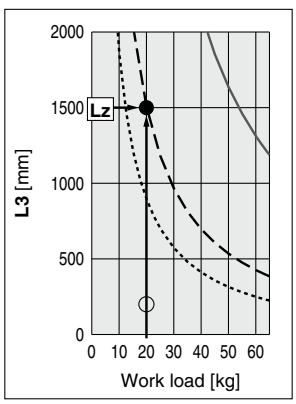

Electric Actuator/Slider Type
Ball Screw Drive

LEFS Series LEFS16, 25, 32, 40

Click here for details. Click here for details.

RoHS

Clean Room Specification ▶ p. 635 Secondary Battery Compatible ▶ p. 665

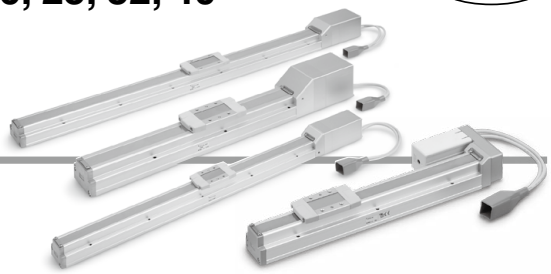

How to Order

LEFS **H** **25** **R** **□** **B** – **200** **□** **C** **N** **K** – **S1**

❶ ❷ ❸ ❹ ❺ ❻ ❼ ❽ ❾ ❿ ⓫

JXC□ Series
CD17T

LEC□ Series
AN **1** **□**

⓬ ⓭ ⓮

For details on controllers, refer to page 58.

❶ Accuracy

Nil	Basic type
H	High-precision type

❷ Size

16
25
32
40

❸ Motor mounting position

Nil	In-line
R	Right side parallel
L	Left side parallel

❹ Motor type

Symbol	Type	Applicable size				Compatible controllers/drivers
		LEFS16	**LEFS25**	**LEFS32**	**LEFS40**	
Nil	Step motor (Servo/24 VDC)	●	●	●	●	JXCE1 JXC91 JXCP1 JXCD1 JXCL1 JXCM1 JXC51 JXC61 LECP1 LECPA
A	Servo motor (24 VDC)	●	●	—	—	LECA6

❺ Lead [mm]

Symbol	LEFS16	LEFS25	LEFS32	LEFS40
H	—	20	24	30
A	10	12	16	20
B	5	6	8	10

❻ Stroke*1 [mm]

Stroke	Note	
	Size	Applicable stroke
50 to 500	**16**	50, 100, 150, 200, 250, 300, 350, 400, 450, 500
50 to 800	**25**	50, 100, 150, 200, 250, 300, 350, 400, 450, 500, 550, 600, 650, 700, 750, 800
50 to 1000	**32**	50, 100, 150, 200, 250, 300, 350, 400, 450, 500, 550, 600, 650, 700, 750, 800, 850, 900, 950, 1000
150 to 1200	**40**	150, 200, 250, 300, 350, 400, 450, 500, 550, 600, 650, 700, 750, 800, 850, 900, 950, 1000, 1100, 1200

❼ Motor option

Nil	Without option
B	With lock

❽ Auto switch compatibility*2 *3 *4 *5

Nil	None
C	With (Includes 1 mounting bracket)

❾ Grease application (Seal band part)

Nil	With
N	Without (Roller specification)

❿ Positioning pin hole

Nil	Housing B bottom*6	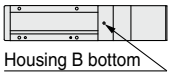 Housing B bottom
K	Body bottom 2 locations	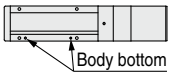 Body bottom

⓫ Actuator cable type/length*8

Standard cable [m]

Nil	None
S1	1.5*10
S3	3*10
S5	5*10

Robotic cable [m]

R1	1.5	**RA**	10*7
R3	3	**RB**	15*7
R5	5	**RC**	20*7
R8	8*7		

Support Guide/*LEFG* Series
The support guide was designed to support workpieces with significant overhang.

p. 109

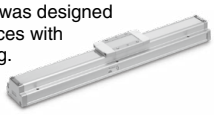

For auto switches, refer to pages 161 to 164.

JXC□ Series (For details, refer to page 59.)



⑫ Controller

Nil	Without controller
C□1□□	With controller

C D 1 7 T

Interface (Communication protocol/Input/Output)

E	EtherCAT®	**L**	IO-Link
9	EtherNet/IP™	**M**	CC-Link Ver1.10
P	PROFINET	**5**	Parallel input (NPN)
D	DeviceNet™	**6**	Parallel input (PNP)

Mounting

7	Screw mounting
8∗14	DIN rail

For single axis

Communication plug connector I/O cable∗15

Symbol	Type	Applicable interface
Nil	Without accessory	—
S	Straight type communication plug connector	DeviceNet™ CC-Link Ver1.10
T	T-branch type communication plug connector	
1	I/O cable (1.5 m)	Parallel input (NPN) Parallel input (PNP)
3	I/O cable (3 m)	
5	I/O cable (5 m)	

LEC□ Series (For details, refer to page 59.)



AN 1 □

⑫ ⑬ ⑭

⑫ Controller/Driver type∗9

Nil	Without controller/driver	
6N	**LECA6** (Step data input type)	NPN
6P		PNP
1N	**LECP1**∗10 (Programless type)	NPN
1P		PNP
AN	**LECPA**∗10 ∗11 (Pulse input type)	NPN
AP		PNP

⑬ I/O cable length∗12

Nil	Without cable (Without communication plug connector)
1	1.5 m
3	3 m∗13
5	5 m∗13

⑭ Controller/Driver mounting

Nil	Screw mounting
D	DIN rail∗14

∗1 Please consult with SMC for non-standard strokes as they are produced as special orders.
∗2 Excluding the LEF16
∗3 If 2 or more are required, please order them separately. (Part no.: LEF-D-2-1 For details, refer to page 161.)
∗4 Order auto switches separately. (For details, refer to pages 162 to 164.)
∗5 When "Nil" is selected, the product will not come with a built-in magnet for an auto switch, and so a mounting bracket cannot be secured. Be sure to select an appropriate model initially as the product cannot be changed to have auto switch compatibility after purchase.
∗6 Refer to the body mounting example on page 166 for the mounting method.
∗7 Produced upon receipt of order (Robotic cable only)
∗8 The standard cable should only be used on fixed parts.
For use on moving parts, select the robotic cable.
Refer to pages 758 and 759 if only the actuator cable is required.
∗9 For details on controllers/drivers and compatible motors, refer to the compatible controllers/drivers on the next page.
∗10 Only available for the motor type "Step motor"
∗11 When pulse signals are open collector, order the current limiting resistor (LEC-PA-R-□) on page 736 separately.
∗12 When "Without controllers/drivers" is selected for controller/driver types, I/O cable cannot be selected. Refer to page 713 (For LECA6), page 724 (For LECP1), or page 736 (For LECPA) if I/O cable is required.
∗13 When "Pulse input type" is selected for controller/driver types, pulse input usable only with differential. Only 1.5 m cables usable with open collector
∗14 The DIN rail is not included. It must be ordered separately.
∗15 Select "Nil" for anything other than DeviceNet™, CC-Link, or parallel input.
Select "Nil," "S," or "T" for DeviceNet™ or CC-Link.
Select "Nil," "1," "3," or "5" for parallel input.

⚠Caution

[CE-compliant products]

① EMC compliance was tested by combining the electric actuator LEF series and the controller LEC/JXC series.
The EMC depends on the configuration of the customer's control panel and the relationship with other electrical equipment and wiring. Therefore, compliance with the EMC directive cannot be certified for SMC components incorporated into the customer's equipment under actual operating conditions. As a result, it is necessary for the customer to verify compliance with the EMC directive for the machinery and equipment as a whole.

② For the servo motor (24 VDC) specification, EMC compliance was tested by installing a noise filter set (LEC-NFA). Refer to page 713 for the noise filter set. Refer to the LECA series Operation Manual for installation.

[UL-compliant products (For the LEC series)]

When compliance with UL is required, the electric actuator and controller/driver should be used with a UL1310 Class 2 power supply.

The actuator and controller/driver are sold as a package.

Confirm that the combination of the controller/driver and actuator is correct.

<Check the following before use.>

① Check the actuator label for the model number. This number should match that of the controller/driver.

② Check that the Parallel I/O configuration matches (NPN or PNP).

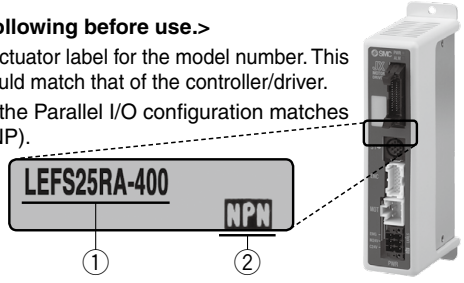

∗ Refer to the Operation Manual for using the products. Please download it via our website: https://www.smcworld.com

Compatible Controllers/Drivers

Type	EtherCAT® direct input type 	EtherNet/IP™ direct input type 	PROFINET direct input type 	DeviceNet™ direct input type 	IO-Link direct input type 	CC-Link direct input type 
Series	**JXCE1**	**JXC91**	**JXCP1**	**JXCD1**	**JXCL1**	**JXCM1**
Features	EtherCAT® direct input	EtherNet/IP™ direct input	PROFINET direct input	DeviceNet™ direct input	IO-Link direct input	CC-Link direct input
Compatible motor	Step motor (Servo/24 VDC)					
Max. number of step data	64 points					
Power supply voltage	24 VDC					
Reference page	741					

Type	Step data input type 	Step data input type 	Programless type 	Pulse input type 
Series	**JXC51 JXC61**	**LECA6**	**LECP1**	**LECPA**
Features	Parallel I/O	Value (Step data) input Standard controller	Capable of setting up operation (step data) without using a PC or teaching box	Operation by pulse signals
Compatible motor	Step motor (Servo/24 VDC)	Servo motor (24 VDC)	Step motor (Servo/24 VDC)	
Max. number of step data	64 points		14 points	—
Power supply voltage	24 VDC			
Reference page	706-1	707	719	731

Specifications

Step Motor (Servo/24 VDC)

Model				LEFS16		LEFS25			LEFS32			LEFS40		
Actuator specifications	Stroke [mm]*1			50 to 500		50 to 800			50 to 1000			150 to 1200		
	Work load [kg]*2	Horizontal	JXC□1/LECP1	14	15	12	25	30	20	45	50	25	55	65
			LECPA/JXC□2 3	9	10	10	20	20	15	40	45	20	50	60
		Vertical		2	4	0.5	7.5	15	4	10	20	2	2	23
	Controller type: JXC□1, LECP1	Speed [mm/s]*2	Up to 500	10 to 700	5 to 360	20 to 1100	12 to 750	6 to 400	24 to 1200	16 to 800	8 to 520	30 to 1200	20 to 1000	10 to 300
		Stroke range	501 to 600	—	—	20 to 900	12 to 540	6 to 270	24 to 1200	16 to 800	8 to 400	30 to 1200	20 to 1000	10 to 300
			601 to 700	—	—	20 to 630	12 to 420	6 to 230	24 to 930	16 to 620	8 to 310	30 to 1200	20 to 900	10 to 300
			701 to 800	—	—	20 to 550	12 to 330	6 to 180	24 to 750	16 to 500	8 to 250	30 to 1140	20 to 760	10 to 300
			801 to 900	—	—	—	—	—	24 to 610	16 to 410	8 to 200	30 to 930	20 to 620	10 to 300
			901 to 1000	—	—	—	—	—	24 to 500	16 to 340	8 to 170	30 to 780	20 to 520	10 to 250
			1001 to 1100	—	—	—	—	—	—	—	—	30 to 660	20 to 440	10 to 220
			1101 to 1200	—	—	—	—	—	—	—	—	30 to 570	20 to 380	10 to 190
	Driver type: LECPA, JXC□2 3	Speed [mm/s]*2	Up to 500	10 to 500	5 to 250	20 to 1000	12 to 500	6 to 250	24 to 1200	16 to 500	8 to 250	30 to 500	20 to 500	10 to 250
		Stroke range	501 to 600	—	—	20 to 900	12 to 500	6 to 250	24 to 1200	16 to 500	8 to 250	30 to 500	20 to 500	10 to 250
			601 to 700	—	—	20 to 630	12 to 420	6 to 230	24 to 930	16 to 500	8 to 250	30 to 500	20 to 500	10 to 250
			701 to 800	—	—	20 to 550	12 to 330	6 to 180	24 to 750	16 to 500	8 to 250	30 to 500	20 to 500	10 to 250
			801 to 900	—	—	—	—	—	24 to 610	16 to 410	8 to 200	30 to 500	20 to 500	10 to 250
			901 to 1000	—	—	—	—	—	24 to 500	16 to 340	8 to 170	30 to 500	20 to 500	10 to 250
			1001 to 1100	—	—	—	—	—	—	—	—	30 to 500	20 to 440	10 to 220
			1101 to 1200	—	—	—	—	—	—	—	—	30 to 500	20 to 380	10 to 190
	Max. acceleration/deceleration [mm/s2]			3000										
	Positioning repeatability [mm]		Basic type	±0.02										
			High-precision type	±0.015 (Lead H: ±0.02)										
	Lost motion [mm]*3		Basic type	0.1 or less										
			High-precision type	0.05 or less										
	Lead [mm]			10	5	20	12	6	24	16	8	30	20	10
	Impact/Vibration resistance [m/s2]*4			50/20										
	Actuation type			Ball screw (LEFS□), Ball screw + Belt (LEFS□R L)										
	Guide type			Linear guide										
	Static allowable moment*5 [N·m]		Mep (Pitching)	10		27			46			110		
			Mey (Yawing)	10		27			46			110		
			Mer (Rolling)	20		52			101			207		
	Operating temperature range [°C]			5 to 40										
	Operating humidity range [%RH]			90 or less (No condensation)										
Electric specifications	Motor size			□28		□42			□56.4					
	Motor type			Step motor (Servo/24 VDC)										
	Encoder			Incremental										
	Power supply voltage [V]			24 VDC ±10%										
	Power [W]*6 *8			Max. power 51		Max. power 57			Max. power 123			Max. power 141		
Lock unit specifications	Type*7			Non-magnetizing lock										
	Holding force [N]			20	39	47	78	157	72	108	216	75	113	225
	Power consumption [W]*8			2.9		5			5			5		
	Rated voltage [V]			24 VDC ±10%										

*1 Please consult with SMC for non-standard strokes as they are produced as special orders.
*2 Speed changes according to the controller/driver type and work load. Check the "Speed–Work Load Graph (Guide)" on pages 32 and 33. Furthermore, if the cable length exceeds 5 m, then it will decrease by up to 10% for each 5 m.
*3 A reference value for correcting an error in reciprocal operation
*4 Impact resistance: No malfunction occurred when the actuator was tested with a drop tester in both an axial direction and a perpendicular direction to the lead screw. (The test was performed with the actuator in the initial state.)
Vibration resistance: No malfunction occurred in a test ranging between 45 to 2000 Hz. The test was performed in both an axial direction and a perpendicular direction to the lead screw. (The test was performed with the actuator in the initial state.)
*5 The static allowable moment is the amount of static moment which can be applied to the actuator when it is stopped. If the product is exposed to impact or repeated load, be sure to take adequate safety measures when using the product.
*6 Indicates the max. power during operation (including the controller). This value can be used for the selection of the power supply.
*7 With lock only
*8 For an actuator with lock, add the power consumption for the lock.

Specifications

Servo Motor (24 VDC)

Model			LEFS16A		LEFS25A		
Actuator specifications	Stroke [mm]*1		50 to 500		50 to 800		
	Work load*2 [kg]	Horizontal	7	10	5	11	18
		Vertical	2	4	1	2.5	5
	Speed*2 [mm/s] Stroke range	Up to 500	1 to 500	1 to 250	2 to 800	2 to 500	1 to 250
		501 to 600	—	—			
		601 to 700	—	—	2 to 630	2 to 420	1 to 230
		701 to 800	—	—	2 to 550	2 to 330	1 to 180
	Max. acceleration/deceleration [mm/s²]		3000				
	Positioning repeatability [mm]	Basic type	±0.02				
		High-precision type	±0.015 (Lead H: ±0.02)				
	Lost motion*3 [mm]	Basic type	0.1 or less				
		High-precision type	0.05 or less				
	Lead [mm]		10	5	20	12	6
	Impact/Vibration resistance [m/s²]*4		50/20				
	Actuation type		Ball screw (LEFS□), Ball screw + Belt (LEFS□ R/L)				
	Guide type		Linear guide				
	Static allowable moment*5 [N·m]	Mep (Pitching)	10		27		
		Mey (Yawing)	10		27		
		Mer (Rolling)	20		52		
	Operating temperature range [°C]		5 to 40				
	Operating humidity range [%RH]		90 or less (No condensation)				
Electric specifications	Motor size		□28		□42		
	Motor output [W]		30		36		
	Motor type		Servo motor (24 VDC)				
	Encoder		Incremental				
	Power supply voltage [V]		24 VDC ±10%				
	Power [W]*6 *8		Max. power 70		Max. power 113		
Lock unit specifications	Type*7		Non-magnetizing lock				
	Holding force [N]		20	39	47	78	157
	Power consumption [W]*8		2.9		5		
	Rated voltage [V]		24 VDC ±10%				

*1 Please consult with SMC for non-standard strokes as they are produced as special orders.
*2 Check the "Speed–Work Load Graph (Guide)" on page 35 for details.
Furthermore, if the cable length exceeds 5 m, then it will decrease by up to 10% for each 5 m.
*3 A reference value for correcting an error in reciprocal operation
*4 Impact resistance: No malfunction occurred when the actuator was tested with a drop tester in both an axial direction and a perpendicular direction to the lead screw. (The test was performed with the actuator in the initial state.)
Vibration resistance: No malfunction occurred in a test ranging between 45 to 2000 Hz. The test was performed in both an axial direction and a perpendicular direction to the lead screw. (The test was performed with the actuator in the initial state.)
*5 The static allowable moment is the amount of static moment which can be applied to the actuator when it is stopped.
If the product is exposed to impact or repeated load, be sure to take adequate safety measures when using the product.
*6 Indicates the max. power during operation (including the controller)
This value can be used for the selection of the power supply.
*7 With lock only
*8 For an actuator with lock, add the power consumption for the lock.

Weight

Series	LEFS16									
Stroke [mm]	50	100	150	200	250	300	350	400	450	500
Product weight [kg]	0.83	0.90	0.98	1.05	1.13	1.20	1.28	1.35	1.43	1.50
Additional weight with lock [kg]	0.12									

Series	LEFS25															
Stroke [mm]	50	100	150	200	250	300	350	400	450	500	550	600	650	700	750	800
Product weight [kg]	1.70	1.84	1.98	2.12	2.26	2.40	2.54	2.68	2.82	2.96	3.10	3.24	3.38	3.52	3.66	3.80
Additional weight with lock [kg]	0.26															

Series	LEFS32																				
Stroke [mm]	50	100	150	200	250	300	350	400	450	500	550	600	650	700	750	800	850	900	950	1000
Product weight [kg]	3.15	3.35	3.55	3.75	3.95	4.15	4.35	4.55	4.75	4.95	5.15	5.35	5.55	5.75	5.95	6.15	6.35	6.55	6.75	6.95
Additional weight with lock [kg]	0.53																			

Series	LEFS40																				
Stroke [mm]	150	200	250	300	350	400	450	500	550	600	650	700	750	800	850	900	950	1000	1100	1200
Product weight [kg]	5.37	5.65	5.93	6.21	6.49	6.77	7.15	7.33	7.61	7.89	8.17	8.45	8.73	9.01	9.29	9.57	9.85	10.13	10.69	11.25
Additional weight with lock [kg]	0.53																			

Construction: In-line Motor

LEFS16, 25, 32

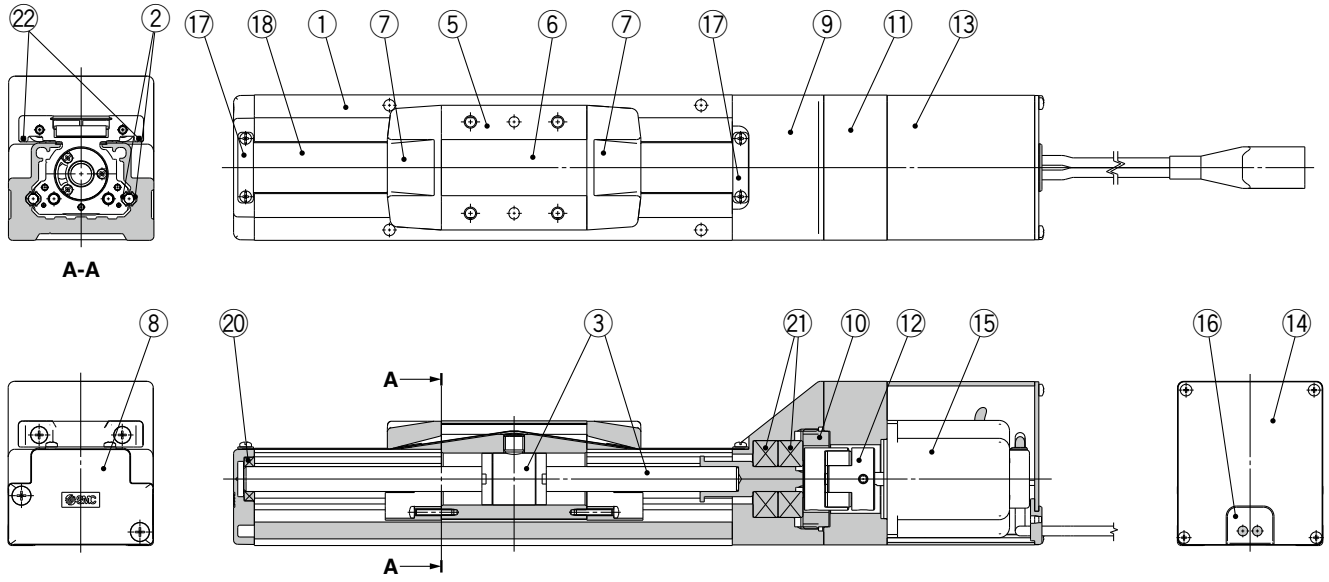

LEFS40

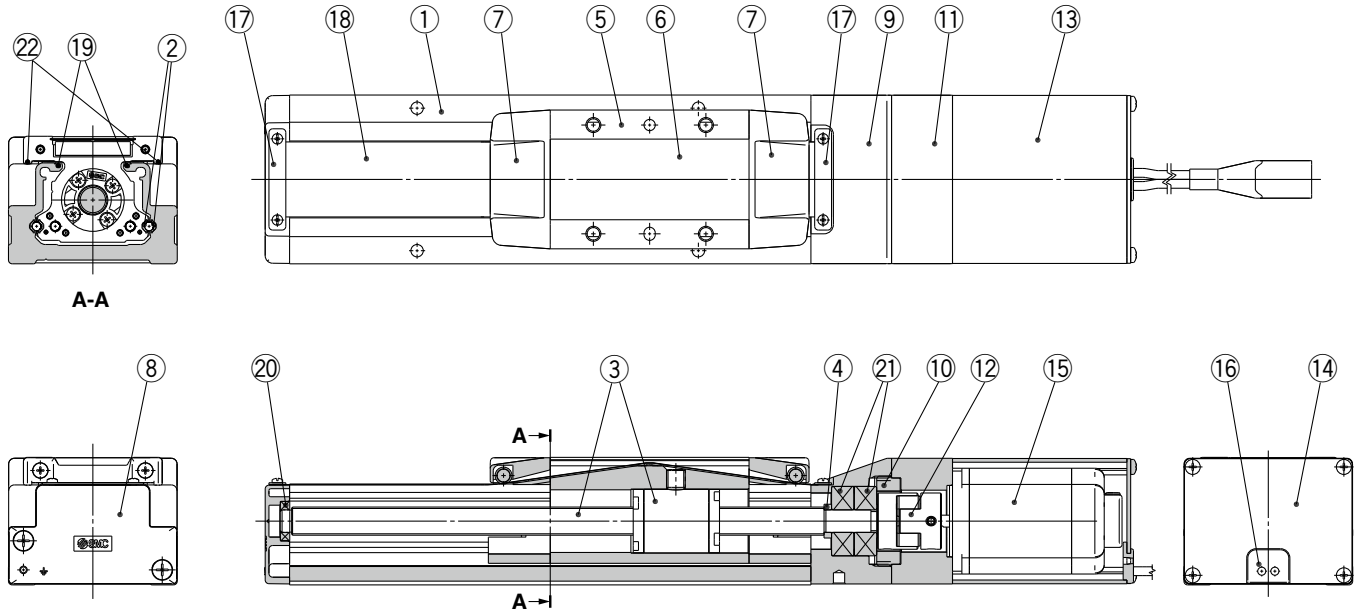

Component Parts

No.	Description		Material	Note
1	**Body**		Aluminum alloy	Anodized
2	**Rail guide**		—	
3	**Ball screw assembly**		—	
4	**Spacer**	**LEFS40**	—	
5	**Table**		Aluminum alloy	Anodized
6	**Blanking plate**		Aluminum alloy	Anodized
7	**Seal band holder**		Synthetic resin	
8	**Housing A**		Aluminum die-casted	Coating
9	**Housing B**		Aluminum die-casted	Coating
10	**Bearing stopper**		Aluminum alloy	
11	**Motor mount**		Aluminum alloy	Coating

No.	Description	Material	Note
12	**Coupling**	—	
13	**Motor cover**	Aluminum alloy	Anodized
14	**End cover**	Aluminum alloy	Anodized
15	**Motor**	—	
16	**Rubber bushing**	NBR	
17	**Band stopper**	Stainless steel	
18	**Dust seal band**	Stainless steel	
19	**Seal magnet**	—	
20	**Bearing**	—	Stroke 250 mm or more
21	**Bearing**	—	
22	**Magnet**	—	With auto switch compatibility

Construction: Motor Parallel

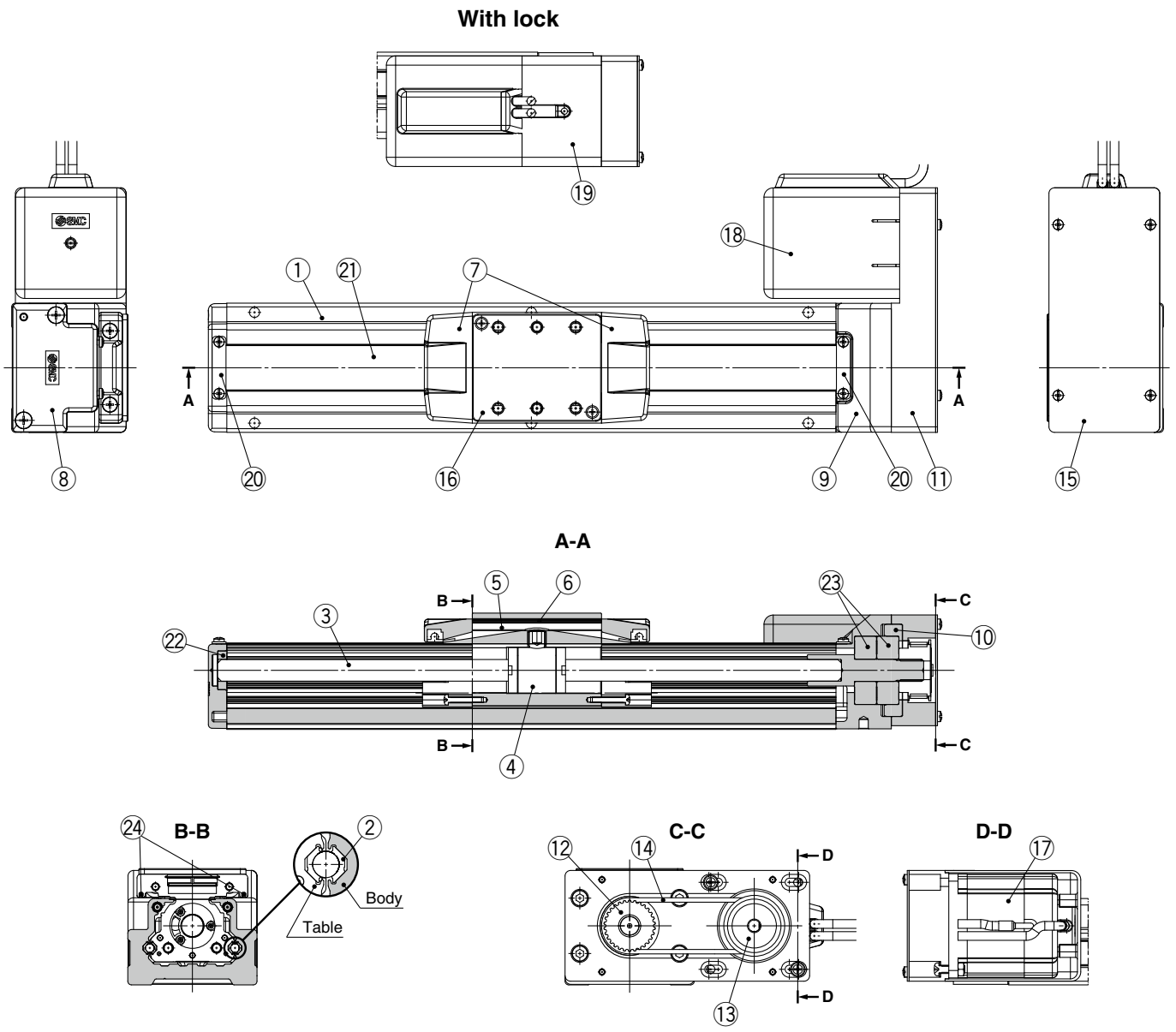

Component Parts

No.	Description	Material	Note
1	**Body**	Aluminum alloy	Anodized
2	**Rail guide**	—	
3	**Ball screw shaft**	—	
4	**Ball screw nut**	—	
5	**Table**	Aluminum alloy	Anodized
6	**Blanking plate**	Aluminum alloy	Anodized
7	**Seal band holder**	Synthetic resin	
8	**Housing A**	Aluminum die-casted	Coating
9	**Housing B**	Aluminum die-casted	Coating
10	**Bearing stopper**	Aluminum alloy	
11	**Return plate**	Aluminum alloy	Coating
12	**Pulley**	Aluminum alloy	
13	**Pulley**	Aluminum alloy	

No.	Description	Material	Note
15	**Cover plate**	Aluminum alloy	Anodized
16	**Table spacer**	Aluminum alloy	Anodized (LEFS32 only)
17	**Motor**	—	
18	**Motor cover**	Synthetic resin	
19	**Motor cover with lock**	Aluminum alloy	Anodized
20	**Band stopper**	Stainless steel	
21	**Dust seal band**	Stainless steel	
22	**Bearing**	—	Stroke 250 mm or more
23	**Bearing**	—	
24	**Magnet**	—	With auto switch compatibility

Replacement Parts/Belt

No.	Size	Order no.
14	16	LE-D-6-1
	25	LE-D-6-2
	32	LE-D-6-3
	40	LE-D-6-4

Dimensions: In-line Motor

LEFS16

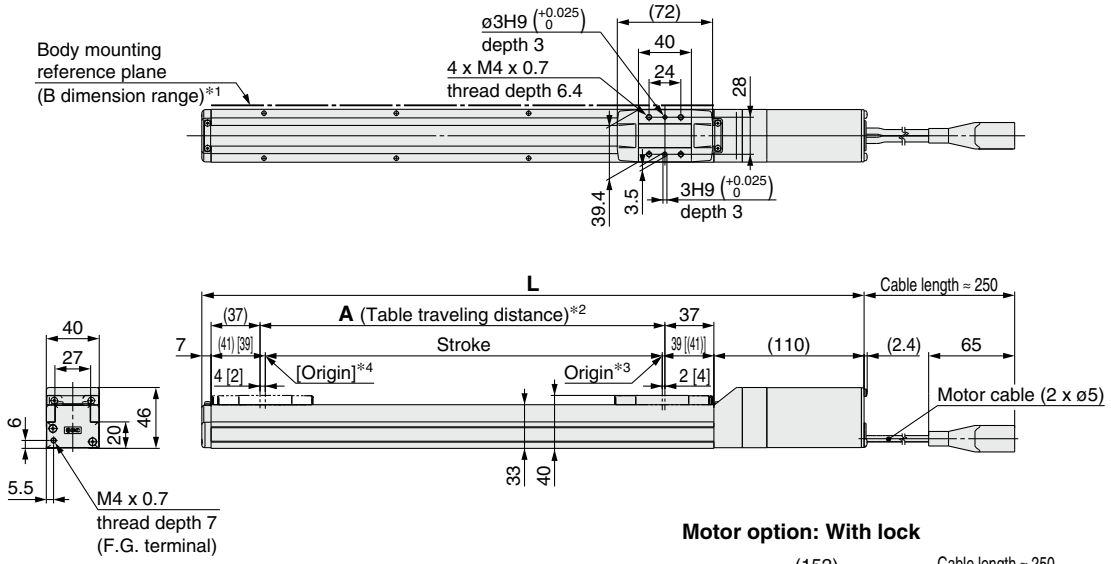

Motor option: With lock

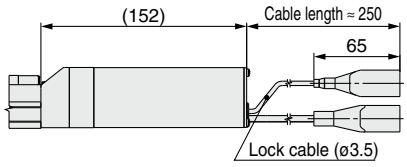

Step motor **Servo motor**

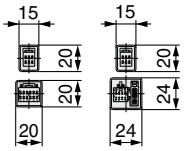

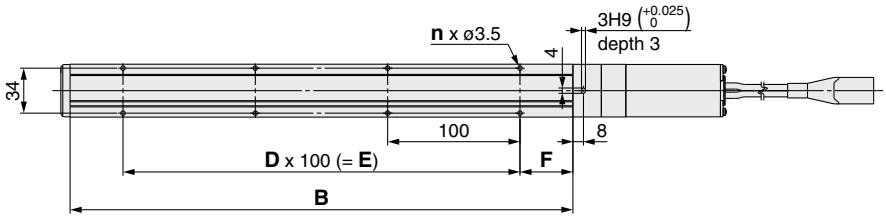

Positioning pin hole*5 (Option): Body bottom

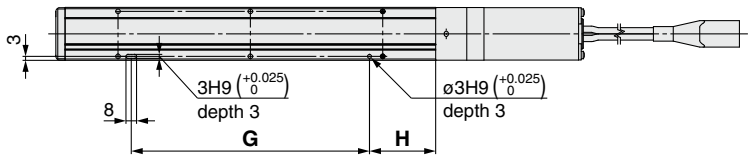

*1 When mounting the actuator using the body mounting reference plane, set the height of the opposite surface or pin to be 2 mm or more because of round chamfering. (Recommended height 5 mm)
In addition, be aware that surfaces other than the body mounting reference plane (B dimension range) may slightly protrude from the body mounting reference plane. Be sure to provide a clearance of 1 mm or more to avoid interference with workpieces, facilities, etc.
*2 This is the distance within which the table can move when it returns to origin.
Make sure workpieces mounted on the table do not interfere with the workpieces and facilities around the table.
*3 Position after returning to origin
*4 [ ] for when the direction of return to origin has changed
*5 When using the body bottom positioning pin holes, do not simultaneously use the housing B bottom pin hole.

Dimensions

[mm]

Model	L		A	B	n	D	E	F	G	H
	Without lock	With lock								
LEFS16□-50□	247	289	56	130	4	—	—	15	80	25
LEFS16□-100□	297	339	106	180	4	—	—	40	80	50
LEFS16□-150□	347	389	156	230	4	—	—		80	50
LEFS16□-200□	397	439	206	280	6	2	200		180	50
LEFS16□-250□	447	489	256	330	6	2	200		180	50
LEFS16□-300□	497	539	306	380	8	3	300		280	50
LEFS16□-350□	547	589	356	430	8	3	300		280	50
LEFS16□-400□	597	639	406	480	10	4	400		380	50
LEFS16□-450□	647	689	456	530	10	4	400		380	50
LEFS16□-500□	697	739	506	580	12	5	500		480	50

Dimensions: In-line Motor

LEFS25

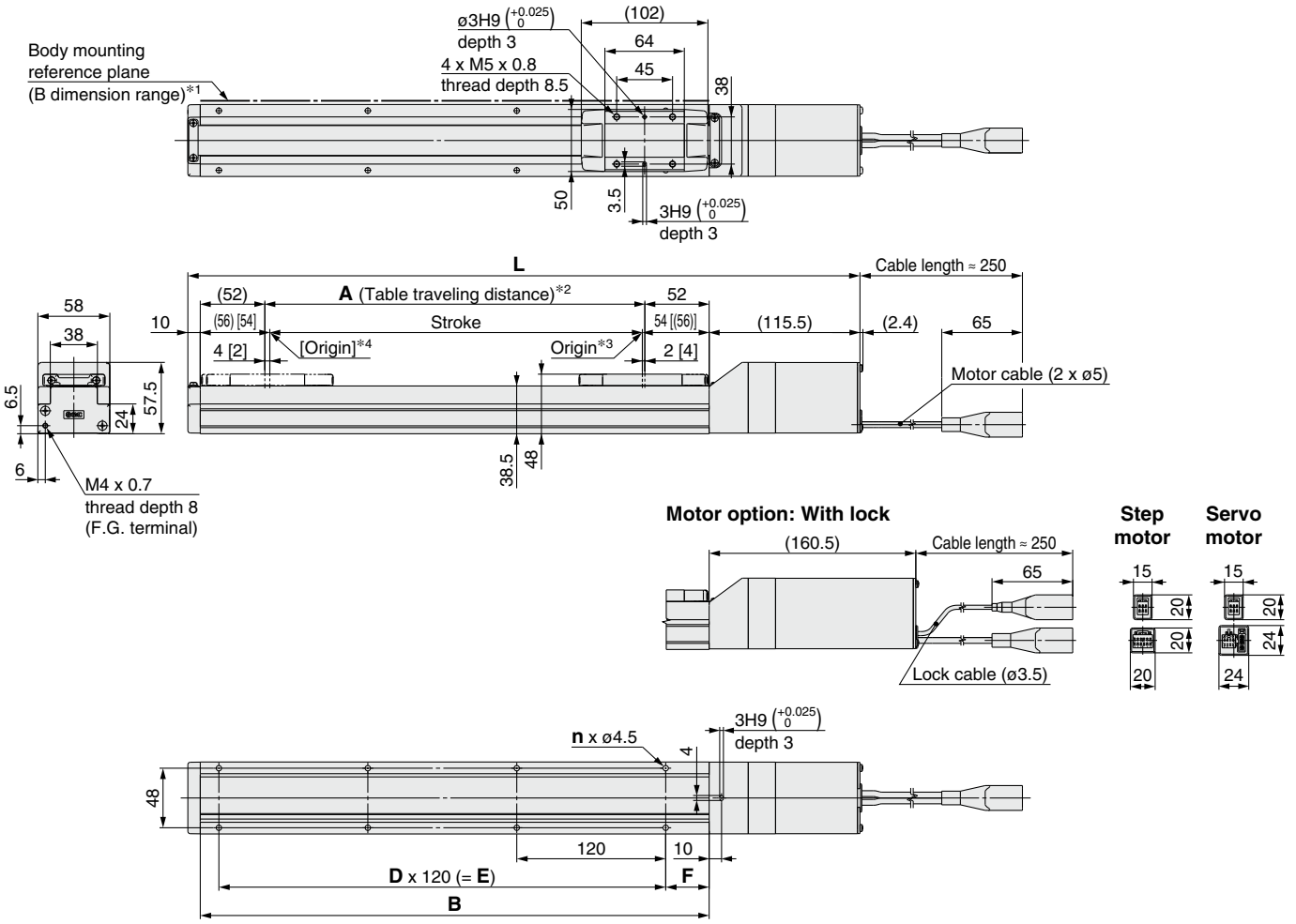

*1 When mounting the actuator using the body mounting reference plane, set the height of the opposite surface or pin to be 3 mm or more because of round chamfering. (Recommended height 5 mm)
In addition, be aware that surfaces other than the body mounting reference plane (B dimension range) may slightly protrude from the body mounting reference plane. Be sure to provide a clearance of 1 mm or more to avoid interference with workpieces, facilities, etc.
*2 This is the distance within which the table can move when it returns to origin.
Make sure workpieces mounted on the table do not interfere with the workpieces and facilities around the table.
*3 Position after returning to origin
*4 [ ] for when the direction of return to origin has changed

Dimensions

[mm]

Model	L		A	B	n	D	E	F
	Without lock	With lock						
LEFS25□-50□	285.5	330.5	56	160	4	—	—	20
LEFS25□-100□	335.5	380.5	106	210	4	—	—	
LEFS25□-150□	385.5	430.5	156	260	4	—	—	
LEFS25□-200□	435.5	480.5	206	310	6	2	240	
LEFS25□-250□	485.5	530.5	256	360	6	2	240	
LEFS25□-300□	535.5	580.5	306	410	8	3	360	
LEFS25□-350□	585.5	630.5	356	460	8	3	360	
LEFS25□-400□	635.5	680.5	406	510	8	3	360	
LEFS25□-450□	685.5	730.5	456	560	10	4	480	35
LEFS25□-500□	735.5	780.5	506	610	10	4	480	
LEFS25□-550□	785.5	830.5	556	660	12	5	600	
LEFS25□-600□	835.5	880.5	606	710	12	5	600	
LEFS25□-650□	885.5	930.5	656	760	12	5	600	
LEFS25□-700□	935.5	980.5	706	810	14	6	720	
LEFS25□-750□	985.5	1030.5	756	860	14	6	720	
LEFS25□-800□	1035.5	1080.5	806	910	16	7	840	

Dimensions: In-line Motor

LEFS25

Positioning pin hole*1 (Option): Body bottom

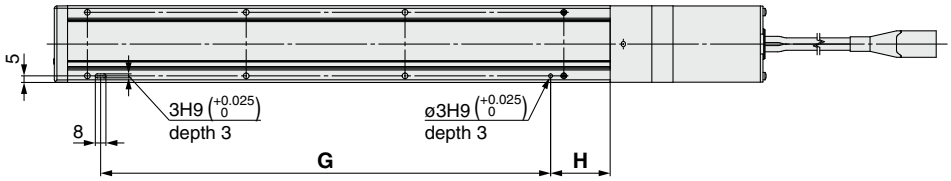

*1 When using the body bottom positioning pin holes, do not simultaneously use the housing B bottom pin hole.

With auto switch (Option)

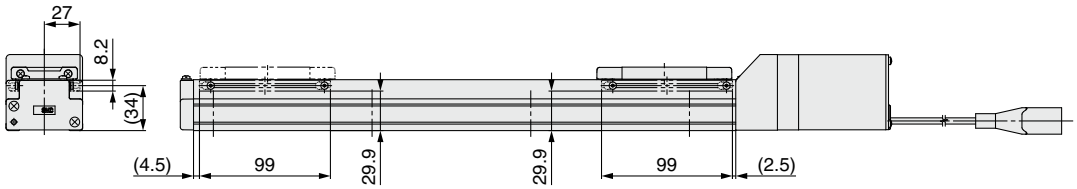

* For strokes of 99 mm or less, only 2 auto switch mounting brackets can be installed on the motor side.

Dimensions [mm]

Model	G	H
LEFS25□-50□	100	30
LEFS25□-100□	100	45
LEFS25□-150□	100	45
LEFS25□-200□	220	45
LEFS25□-250□	220	45
LEFS25□-300□	340	45
LEFS25□-350□	340	45
LEFS25□-400□	340	45
LEFS25□-450□	460	45
LEFS25□-500□	460	45
LEFS25□-550□	580	45
LEFS25□-600□	580	45
LEFS25□-650□	580	45
LEFS25□-700□	700	45
LEFS25□-750□	700	45
LEFS25□-800□	820	45

Dimensions: In-line Motor

LEFS32

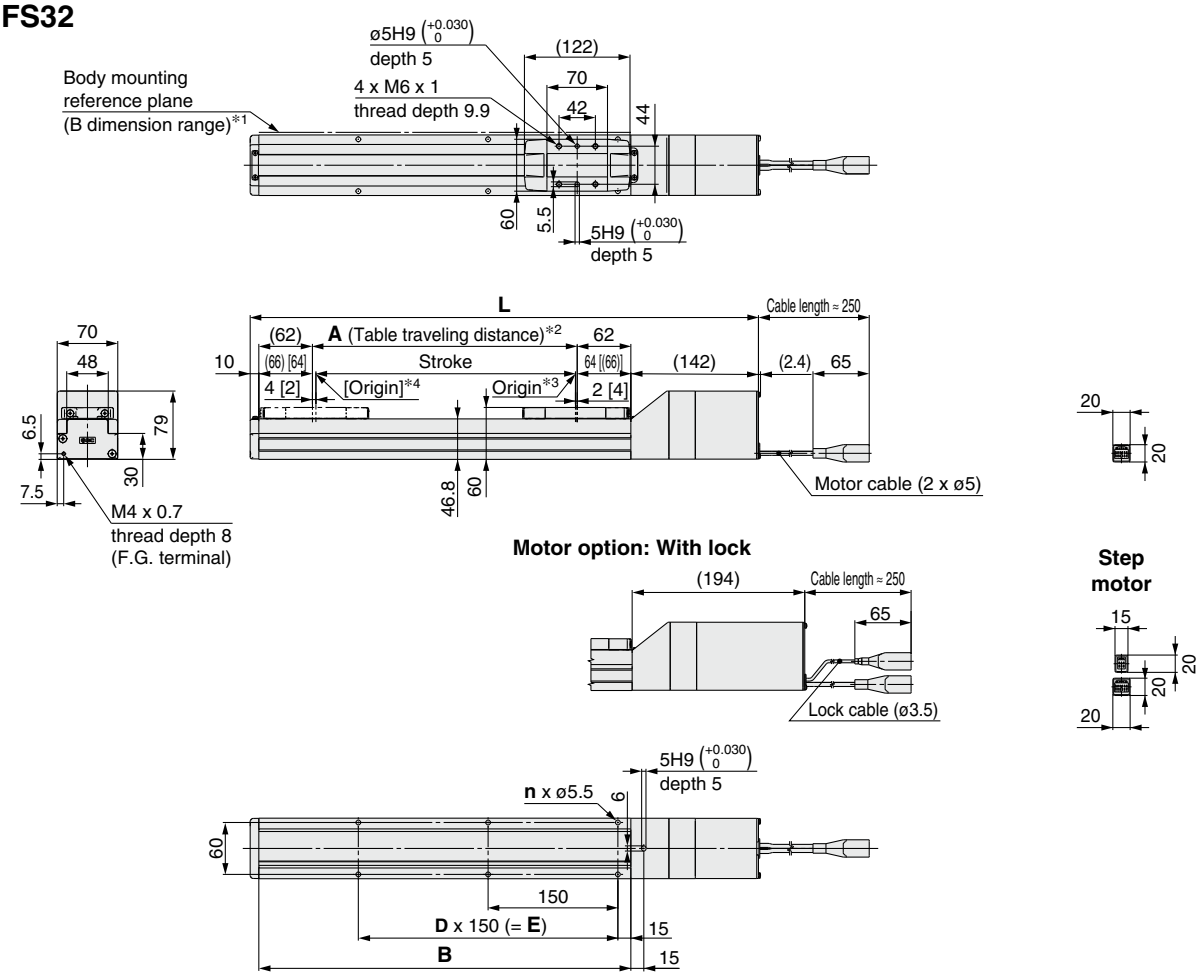

*1 When mounting the actuator using the body mounting reference plane, set the height of the opposite surface or pin to be 3 mm or more because of round chamfering. (Recommended height 5 mm)
In addition, be aware that surfaces other than the body mounting reference plane (B dimension range) may slightly protrude from the body mounting reference plane. Be sure to provide a clearance of 1 mm or more to avoid interference with workpieces, facilities, etc.
*2 This is the distance within which the table can move when it returns to origin.
Make sure workpieces mounted on the table do not interfere with the workpieces and facilities around the table.
*3 Position after returning to origin
*4 [ ] for when the direction of return to origin has changed

Dimensions

[mm]

Model	L		A	B	n	D	E
	Without lock	With lock					
LEFS32□-50□	332	384	56	180	4	—	—
LEFS32□-100□	382	434	106	230	4	—	—
LEFS32□-150□	432	484	156	280	4	—	—
LEFS32□-200□	482	534	206	330	6	2	300
LEFS32□-250□	532	584	256	380	6	2	300
LEFS32□-300□	582	634	306	430	6	2	300
LEFS32□-350□	632	684	356	480	8	3	450
LEFS32□-400□	682	734	406	530	8	3	450
LEFS32□-450□	732	784	456	580	8	3	450
LEFS32□-500□	782	834	506	630	10	4	600
LEFS32□-550□	832	884	556	680	10	4	600
LEFS32□-600□	882	934	606	730	10	4	600
LEFS32□-650□	932	984	656	780	12	5	750
LEFS32□-700□	982	1034	706	830	12	5	750
LEFS32□-750□	1032	1084	756	880	12	5	750
LEFS32□-800□	1082	1134	806	930	14	6	900
LEFS32□-850□	1132	1184	856	980	14	6	900
LEFS32□-900□	1182	1234	906	1030	14	6	900
LEFS32□-950□	1232	1284	956	1080	16	7	1050
LEFS32□-1000□	1282	1334	1006	1130	16	7	1050

Dimensions: In-line Motor

LEFS32

Positioning pin hole*1 (Option): Body bottom

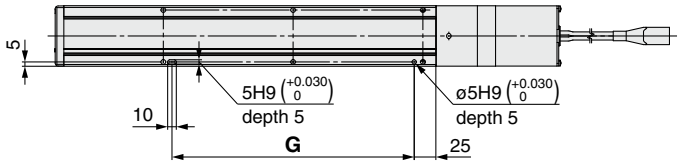

*1 When using the body bottom positioning pin holes, do not simultaneously use the housing B bottom pin hole.

With auto switch (Option)

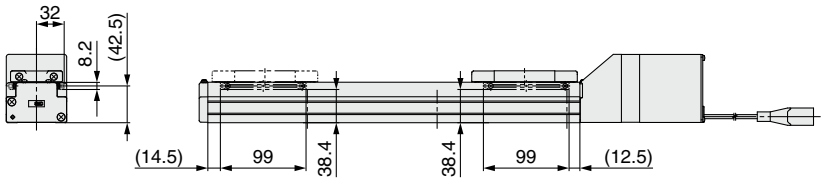

* For strokes of 99 mm or less, only 2 auto switch mounting brackets can be installed on the motor side.

Dimensions [mm]

Model	G
LEFS32□-50□	130
LEFS32□-100□	130
LEFS32□-150□	130
LEFS32□-200□	280
LEFS32□-250□	280
LEFS32□-300□	280
LEFS32□-350□	430
LEFS32□-400□	430
LEFS32□-450□	430
LEFS32□-500□	580
LEFS32□-550□	580
LEFS32□-600□	580
LEFS32□-650□	730
LEFS32□-700□	730
LEFS32□-750□	730
LEFS32□-800□	880
LEFS32□-850□	880
LEFS32□-900□	880
LEFS32□-950□	1030
LEFS32□-1000□	1030

Dimensions: In-line Motor

LEFS40

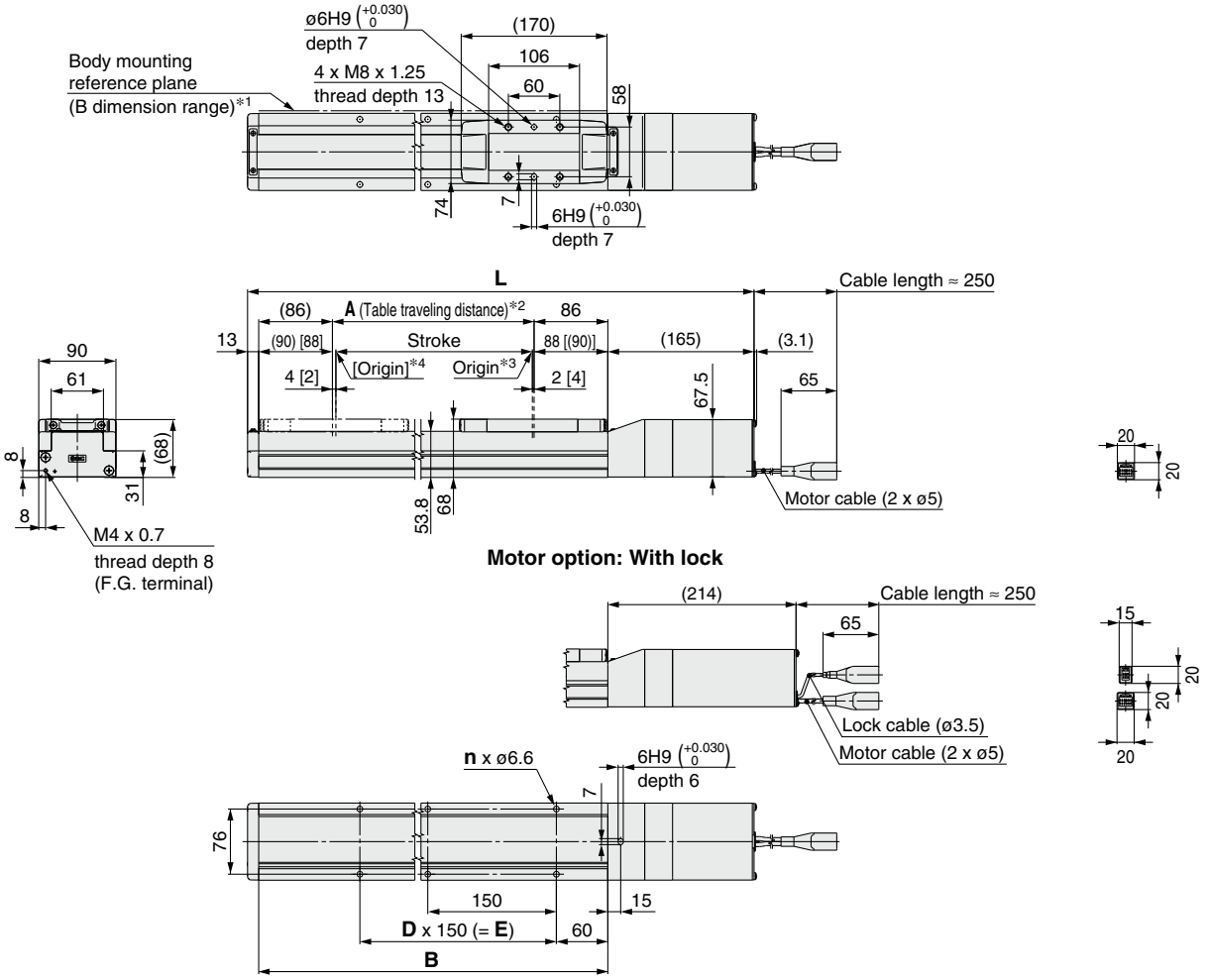

*1 When mounting the actuator using the body mounting reference plane, set the height of the opposite surface or pin to be 3 mm or more because of round chamfering. (Recommended height 5 mm)
In addition, be aware that surfaces other than the body mounting reference plane (B dimension range) may slightly protrude from the body mounting reference plane. Be sure to provide a clearance of 1 mm or more to avoid interference with workpieces, facilities, etc.
*2 This is the distance within which the table can move when it returns to origin.
Make sure workpieces mounted on the table do not interfere with the workpieces and facilities around the table.
*3 Position after returning to origin
*4 [ ] for the direction of return to origin has changed

Dimensions [mm]

Model	L		A	B	n	D	E
	Without lock	With lock					
LEFS40□-150□	506	555	156	328	4	—	150
LEFS40□-200□	556	605	206	378	6	2	300
LEFS40□-250□	606	655	256	428	6	2	300
LEFS40□-300□	656	705	306	478	6	2	300
LEFS40□-350□	706	755	356	528	8	3	450
LEFS40□-400□	756	805	406	578	8	3	450
LEFS40□-450□	806	855	456	628	8	3	450
LEFS40□-500□	856	905	506	678	10	4	600
LEFS40□-550□	906	955	556	728	10	4	600
LEFS40□-600□	956	1005	606	778	10	4	600
LEFS40□-650□	1006	1055	656	828	12	5	750
LEFS40□-700□	1056	1105	706	878	12	5	750
LEFS40□-750□	1106	1155	756	928	12	5	750
LEFS40□-800□	1156	1205	806	978	14	6	900
LEFS40□-850□	1206	1255	856	1028	14	6	900
LEFS40□-900□	1256	1305	906	1078	14	6	900
LEFS40□-950□	1306	1355	956	1128	16	7	1050
LEFS40□-1000□	1356	1405	1006	1178	16	7	1050
LEFS40□-1100□	1456	1505	1106	1278	18	8	1200
LEFS40□-1200□	1556	1605	1206	1378	18	8	1200

Dimensions: In-line Motor

LEFS40

Positioning pin hole*1 (Option): Body bottom

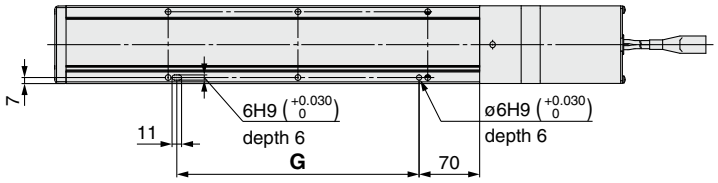

*1 When using the body bottom positioning pin holes, do not simultaneously use the housing B bottom pin hole.

With auto switch (Option)

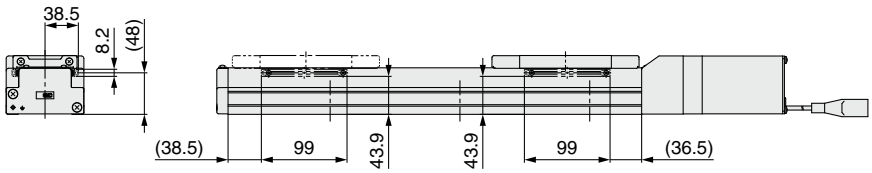

Dimensions [mm]

Model	G
LEFS40□-150□	130
LEFS40□-200□	280
LEFS40□-250□	280
LEFS40□-300□	280
LEFS40□-350□	430
LEFS40□-400□	430
LEFS40□-450□	430
LEFS40□-500□	580
LEFS40□-550□	580
LEFS40□-600□	580
LEFS40□-650□	730
LEFS40□-700□	730
LEFS40□-750□	730
LEFS40□-800□	880
LEFS40□-850□	880
LEFS40□-900□	880
LEFS40□-950□	1030
LEFS40□-1000□	1030
LEFS40□-1100□	1180
LEFS40□-1200□	1180

Dimensions: Motor Parallel

LEFS16

Connector

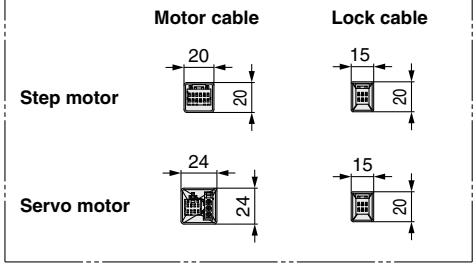

With lock: LEFS16□□-□B

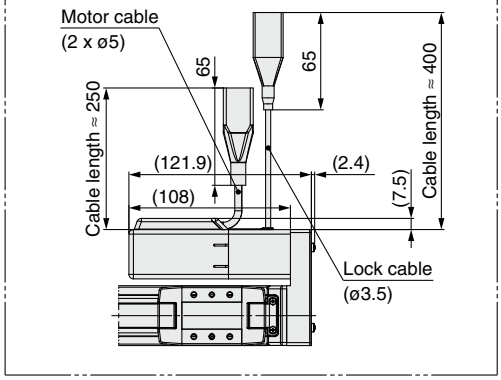

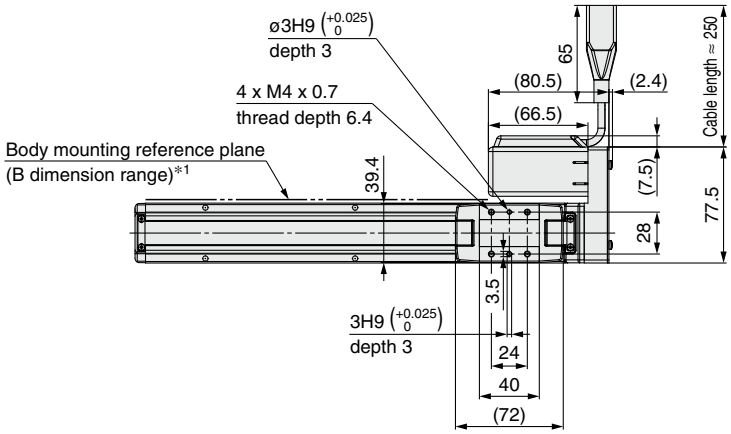

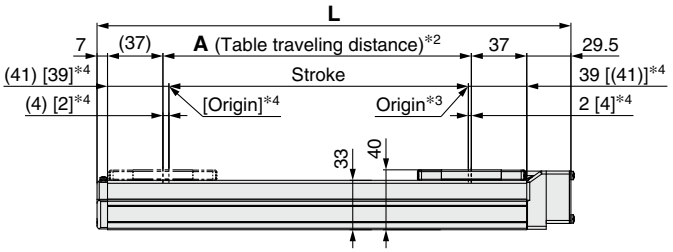

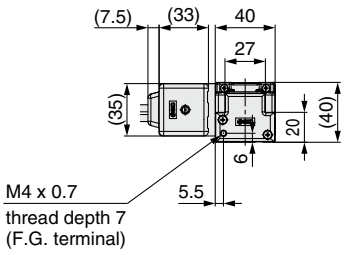

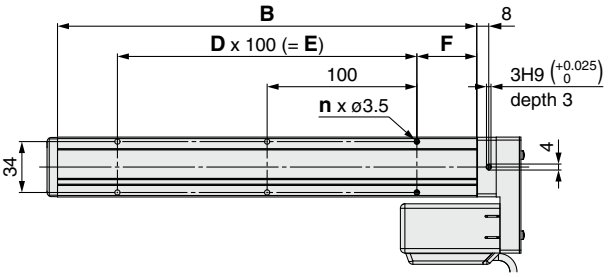

Motor mounting position: Left side parallel **LEFS16L□**	Motor mounting position: Right side parallel **LEFS16R□**

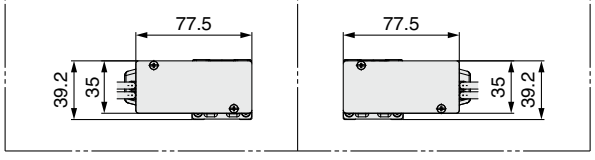

Positioning pin hole*5 (Option): Body bottom

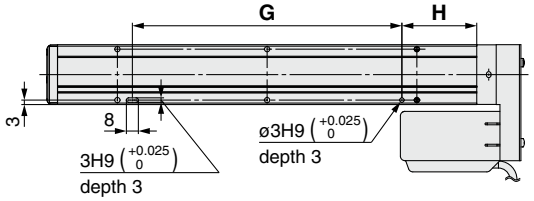

*1 When mounting the actuator using the body mounting reference plane, set the height of the opposite surface or pin to be 2 mm or more. (Recommended height 5 mm) In addition, be aware that surfaces other than the body mounting reference plane (B dimension range) may slightly protrude from the body mounting reference plane. Be sure to provide a clearance of 1 mm or more to avoid interference with workpieces, facilities, etc.

*2 This is the distance within which the table can move when it returns to origin. Make sure workpieces mounted on the table do not interfere with the workpieces and facilities around the table.

*3 Position after returning to origin

*4 [ ] for when the direction of return to origin has changed

*5 When using the body bottom positioning pin holes, do not simultaneously use the housing B bottom pin hole.

Dimensions [mm]

Model	L	A	B	n	D	E	F	G	H
LEFS16□□-50□	166.5	56	130	4	—	—	15	80	25
LEFS16□□-100□	216.5	106	180	4	—	—	40	80	50
LEFS16□□-150□	266.5	156	230	4	—	—		80	50
LEFS16□□-200□	316.5	206	280	6	2	200		180	50
LEFS16□□-250□	366.5	256	330	6	2	200		180	50
LEFS16□□-300□	416.5	306	380	8	3	300		280	50
LEFS16□□-350□	466.5	356	430	8	3	300		280	50
LEFS16□□-400□	516.5	406	480	10	4	400		380	50
LEFS16□□-450□	566.5	456	530	10	4	400		380	50
LEFS16□□-500□	616.5	506	580	12	5	500		480	50

Dimensions: Motor Parallel

LEFS25R

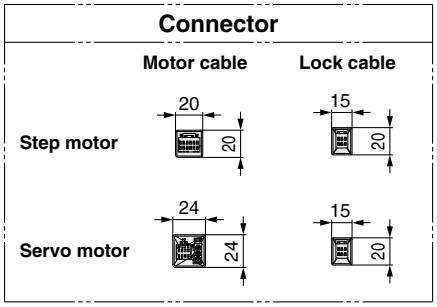

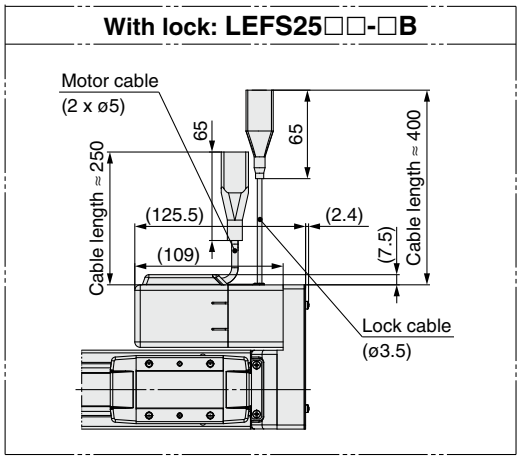

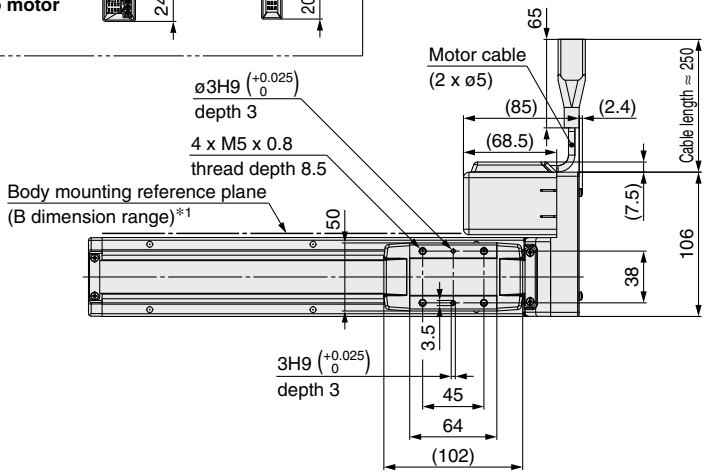

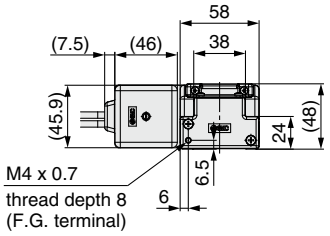

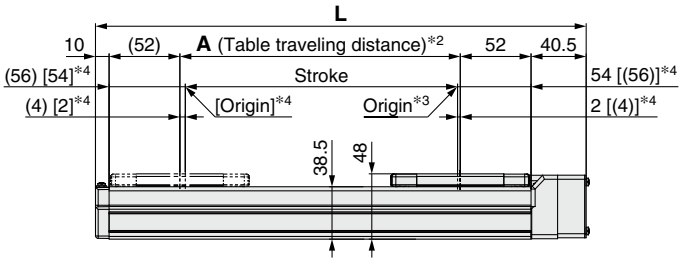

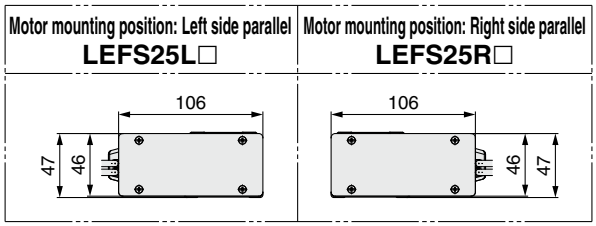

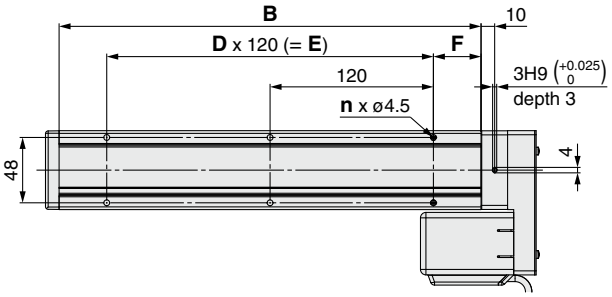

*1 When mounting the actuator using the body mounting reference plane, set the height of the opposite surface or pin to be 3 mm or more. (Recommended height 5 mm) In addition, be aware that surfaces other than the body mounting reference plane (B dimension range) may slightly protrude from the body mounting reference plane. Be sure to provide a clearance of 1 mm or more to avoid interference with workpieces, facilities, etc.

*2 This is the distance within which the table can move when it returns to origin. Make sure workpieces mounted on the table do not interfere with the workpieces and facilities around the table.

*3 Position after returning to origin

*4 [ ] for when the direction of return to origin has changed

Dimensions [mm]

Model	L	A	B	n	D	E	F
LEFS25□□-50□	210.5	56	160	4	—	—	20
LEFS25□□-100□	260.5	106	210	4	—	—	35
LEFS25□□-150□	310.5	156	260	4	—	—	
LEFS25□□-200□	360.5	206	310	6	2	240	
LEFS25□□-250□	410.5	256	360	6	2	240	
LEFS25□□-300□	460.5	306	410	8	3	360	
LEFS25□□-350□	510.5	356	460	8	3	360	
LEFS25□□-400□	560.5	406	510	8	3	360	

Dimensions [mm]

Model	L	A	B	n	D	E	F
LEFS25□□-450□	610.5	456	560	10	4	480	35
LEFS25□□-500□	660.5	506	610	10	4	480	
LEFS25□□-550□	710.5	556	660	12	5	600	
LEFS25□□-600□	760.5	606	710	12	5	600	
LEFS25□□-650□	810.5	656	760	12	5	600	
LEFS25□□-700□	860.5	706	810	14	6	720	
LEFS25□□-750□	910.5	756	860	14	6	720	
LEFS25□□-800□	960.5	806	910	16	7	840	

Dimensions: Motor Parallel

LEFS25R

Positioning pin hole*1 (Option): Body bottom

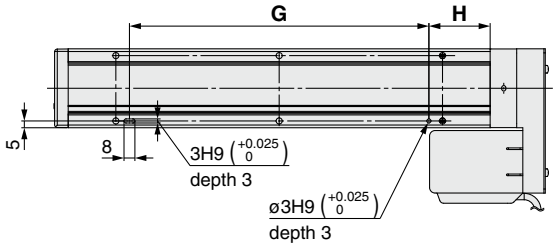

*1 When using the body bottom positioning pin holes, do not simultaneously use the housing B bottom pin hole.

With auto switch (Option)

LEFS25R

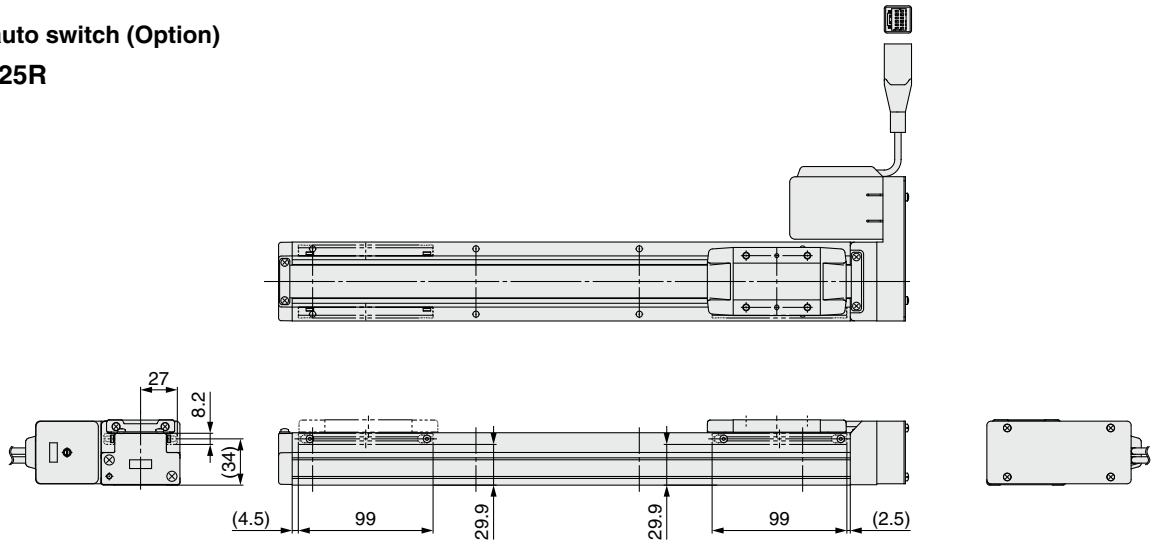

LEFS25L

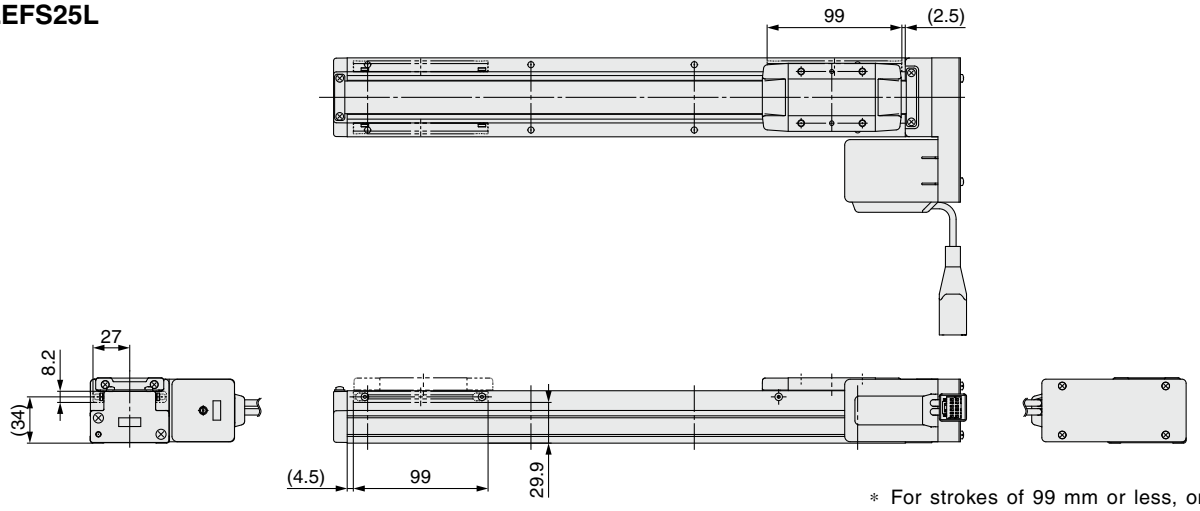

* For strokes of 99 mm or less, only 1 auto switch mounting bracket can be installed on the motor side.

Dimensions [mm]

Model	G	H
LEFS25□□-50□	100	30
LEFS25□□-100□	100	45
LEFS25□□-150□	100	45
LEFS25□□-200□	220	45
LEFS25□□-250□	220	45
LEFS25□□-300□	340	45
LEFS25□□-350□	340	45
LEFS25□□-400□	340	45

Dimensions [mm]

Model	G	H
LEFS25□□-450□	460	45
LEFS25□□-500□	460	45
LEFS25□□-550□	580	45
LEFS25□□-600□	580	45
LEFS25□□-650□	580	45
LEFS25□□-700□	700	45
LEFS25□□-750□	700	45
LEFS25□□-800□	820	45

Dimensions: Motor Parallel

LEFS32R

With lock: LEFS32□□-□B

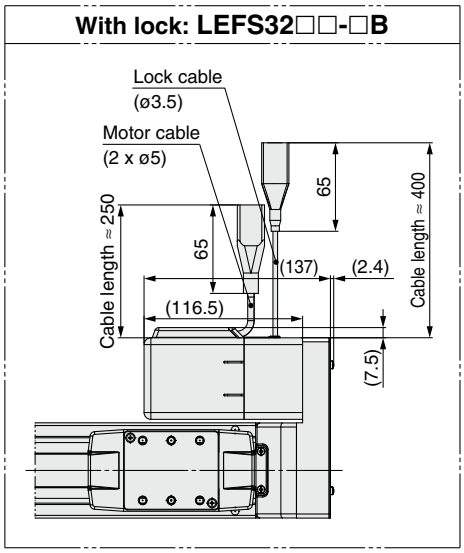

Connector

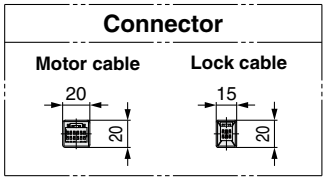

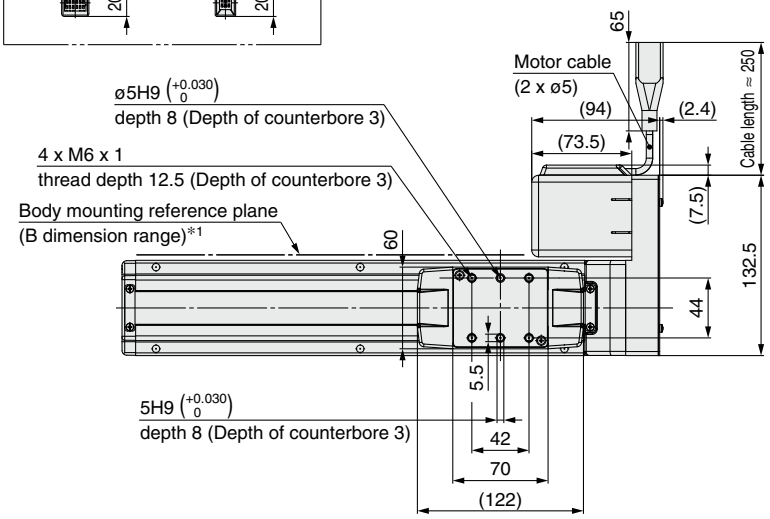

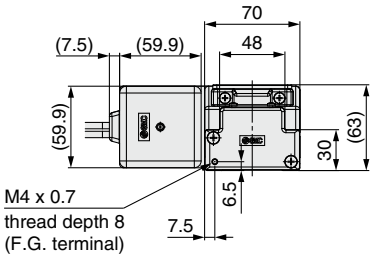

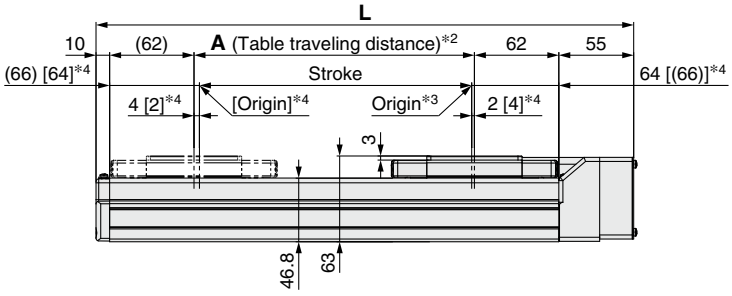

Motor mounting position: Left side parallel
LEFS32L□

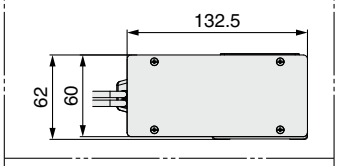

Motor mounting position: Right side parallel
LEFS32R□

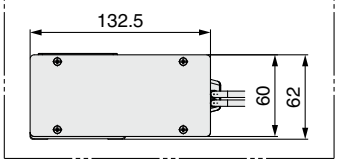

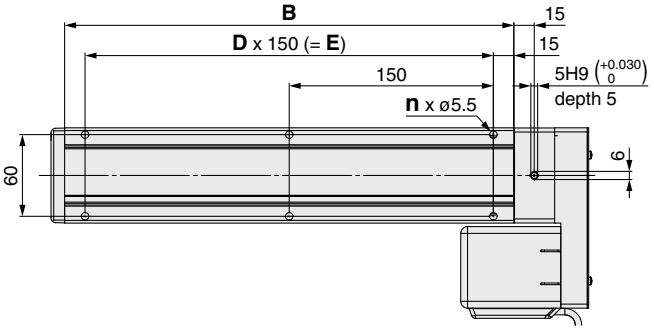

*1 When mounting the actuator using the body mounting reference plane, set the height of the opposite surface or pin to be 3 mm or more. (Recommended height 5 mm) In addition, be aware that surfaces other than the body mounting reference plane (B dimension range) may slightly protrude from the body mounting reference plane. Be sure to provide a clearance of 1 mm or more to avoid interference with workpieces, facilities, etc.

*2 This is the distance within which the table can move when it returns to origin. Make sure workpieces mounted on the table do not interfere with the workpieces and facilities around the table.

*3 Position after returning to origin

*4 [ ] for when the direction of return to origin has changed

Dimensions [mm]

Model	L	A	B	n	D	E
LEFS32□□-50□	245	56	180	4	—	—
LEFS32□□-100□	295	106	230	4	—	—
LEFS32□□-150□	345	156	280	4	—	—
LEFS32□□-200□	395	206	330	6	2	300
LEFS32□□-250□	445	256	380	6	2	300
LEFS32□□-300□	495	306	430	6	2	300
LEFS32□□-350□	545	356	480	8	3	450
LEFS32□□-400□	595	406	530	8	3	450
LEFS32□□-450□	645	456	580	8	3	450
LEFS32□□-500□	695	506	630	10	4	600

Dimensions [mm]

Model	L	A	B	n	D	E
LEFS32□□-550□	745	556	680	10	4	600
LEFS32□□-600□	795	606	730	10	4	600
LEFS32□□-650□	845	656	780	12	5	750
LEFS32□□-700□	895	706	830	12	5	750
LEFS32□□-750□	945	756	880	12	5	750
LEFS32□□-800□	995	806	930	14	6	900
LEFS32□□-850□	1045	856	980	14	6	900
LEFS32□□-900□	1095	906	1030	14	6	900
LEFS32□□-950□	1145	956	1080	16	7	1050
LEFS32□□-1000□	1195	1006	1130	16	7	1050

Dimensions: Motor Parallel

LEFS32R

Positioning pin hole*1 (Option): Body bottom

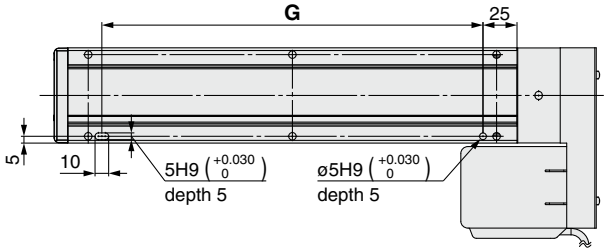

*1 When using the body bottom positioning pin holes, do not simultaneously use the housing B bottom pin hole.

With auto switch (Option)

LEFS32R

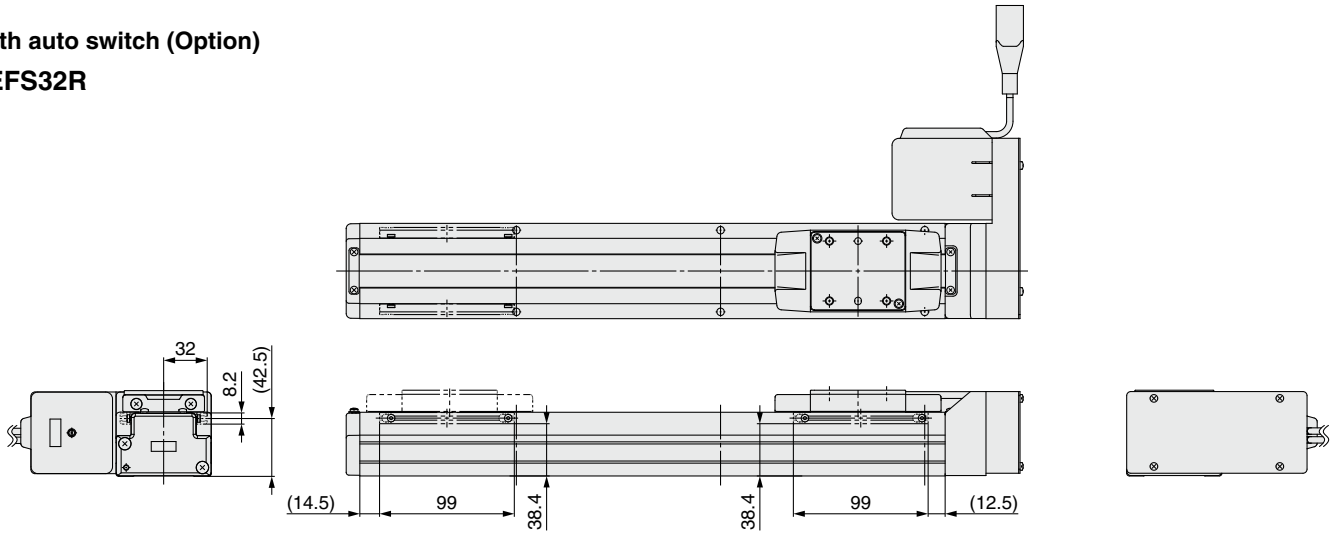

LEFS32L

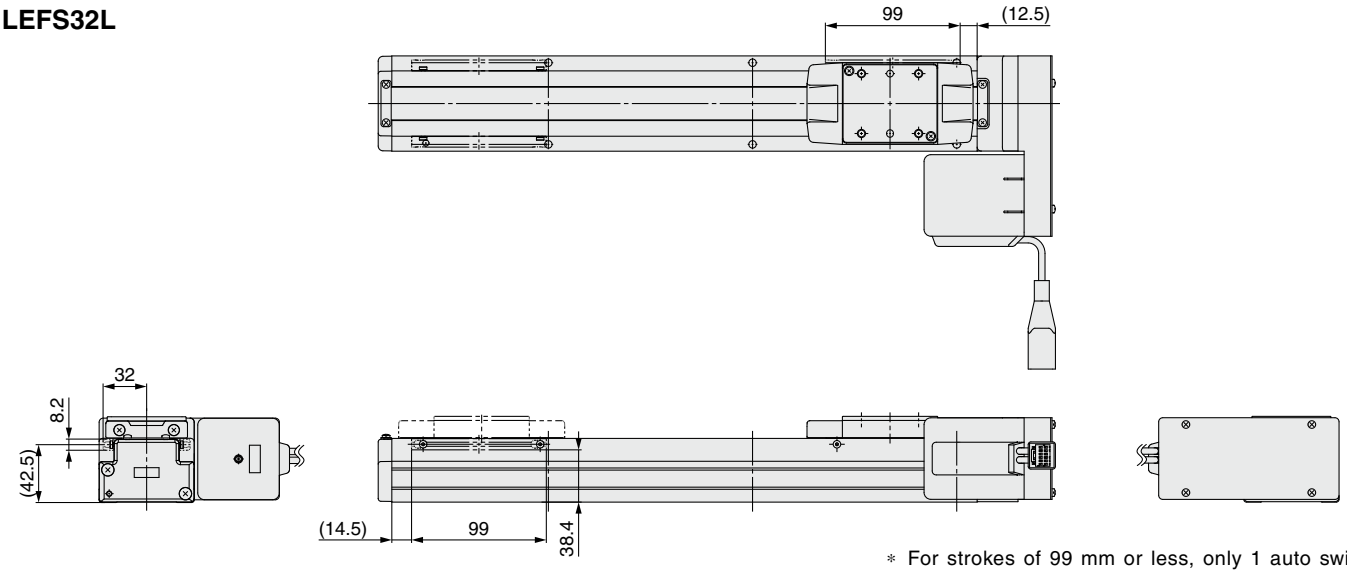

* For strokes of 99 mm or less, only 1 auto switch mounting bracket can be installed on the motor side.

Dimensions [mm]

Model	G
LEFS32□□-50□	130
LEFS32□□-100□	130
LEFS32□□-150□	130
LEFS32□□-200□	280
LEFS32□□-250□	280
LEFS32□□-300□	280
LEFS32□□-350□	430
LEFS32□□-400□	430
LEFS32□□-450□	430
LEFS32□□-500□	580

Dimensions [mm]

Model	G
LEFS32□□-550□	580
LEFS32□□-600□	580
LEFS32□□-650□	730
LEFS32□□-700□	730
LEFS32□□-750□	730
LEFS32□□-800□	880
LEFS32□□-850□	880
LEFS32□□-900□	880
LEFS32□□-950□	1030
LEFS32□□-1000□	1030

Dimensions: Motor Parallel

LEFS40R

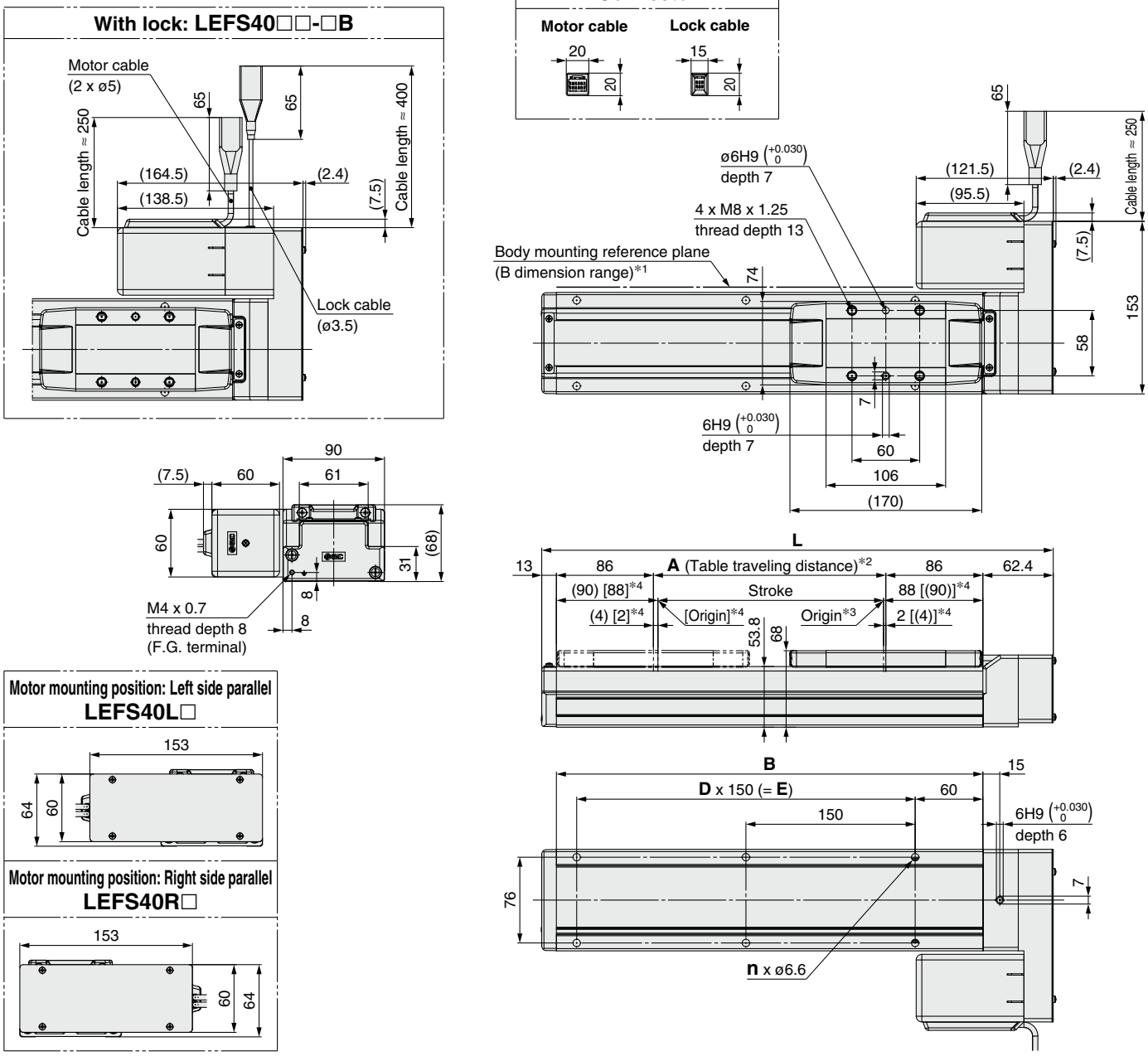

*1 When mounting the actuator using the body mounting reference plane, set the height of the opposite surface or pin to be 3 mm or more. (Recommended height 5 mm) In addition, be aware that surfaces other than the body mounting reference plane (B dimension range) may slightly protrude from the body mounting reference plane. Be sure to provide a clearance of 1 mm or more to avoid interference with workpieces, facilities, etc.

*2 This is the distance within which the table can move when it returns to origin. Make sure workpieces mounted on the table do not interfere with the workpieces and facilities around the table.

*3 Position after returning to origin

*4 [ ] for when the direction of return to origin has changed

Dimensions [mm]

Model	L	A	B	n	D	E
LEFS40□□-150□	403.4	156	328	4	—	150
LEFS40□□-200□	453.4	206	378	6	2	300
LEFS40□□-250□	503.4	256	428	6	2	300
LEFS40□□-300□	553.4	306	478	6	2	300
LEFS40□□-350□	603.4	356	528	8	3	450
LEFS40□□-400□	653.4	406	578	8	3	450
LEFS40□□-450□	703.4	456	628	8	3	450
LEFS40□□-500□	753.4	506	678	10	4	600
LEFS40□□-550□	803.4	556	728	10	4	600
LEFS40□□-600□	853.4	606	778	10	4	600

Dimensions [mm]

Model	L	A	B	n	D	E
LEFS40□□-650□	903.4	656	828	12	5	750
LEFS40□□-700□	953.4	706	878	12	5	750
LEFS40□□-750□	1003.4	756	928	12	5	750
LEFS40□□-800□	1053.4	806	978	14	6	900
LEFS40□□-850□	1103.4	856	1028	14	6	900
LEFS40□□-900□	1153.4	906	1078	14	6	900
LEFS40□□-950□	1203.4	956	1128	16	7	1050
LEFS40□□-1000□	1253.4	1006	1178	16	7	1050
LEFS40□□-1100□	1353.4	1106	1278	18	8	1200
LEFS40□□-1200□	1453.4	1206	1378	18	8	1200

Dimensions: Motor Parallel

LEFS40R

Positioning pin hole*1 (Option): Body bottom

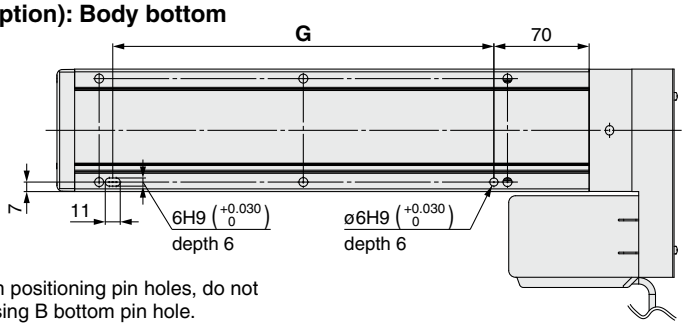

*1 When using the body bottom positioning pin holes, do not simultaneously use the housing B bottom pin hole.

With auto switch (Option)

LEFS40R

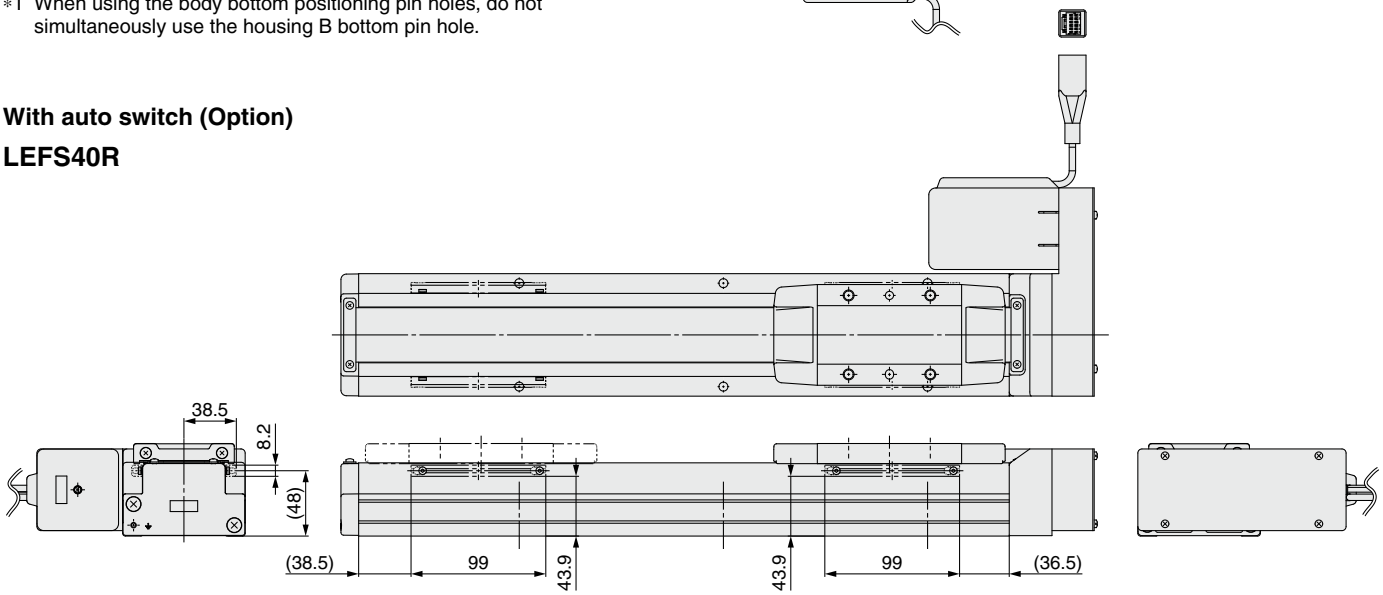

LEFS40L

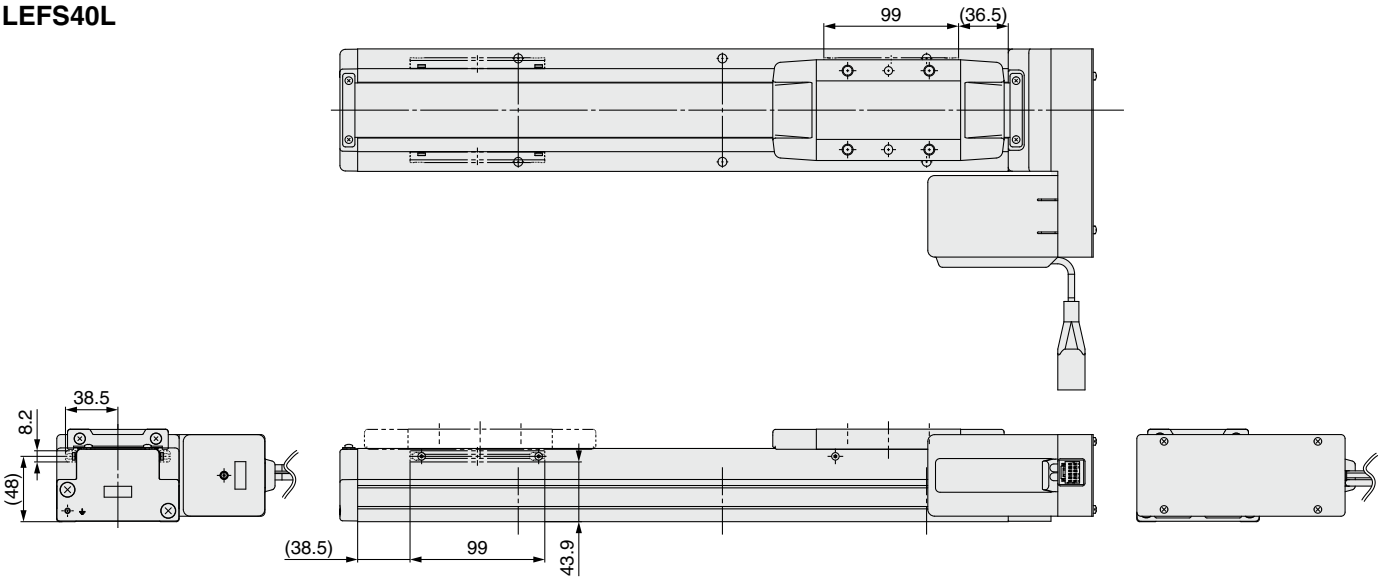

Dimensions [mm]

Model	G
LEFS40□□-150□	130
LEFS40□□-200□	280
LEFS40□□-250□	280
LEFS40□□-300□	280
LEFS40□□-350□	430
LEFS40□□-400□	430
LEFS40□□-450□	430
LEFS40□□-500□	580
LEFS40□□-550□	580
LEFS40□□-600□	580

Dimensions [mm]

Model	G
LEFS40□□-650□	730
LEFS40□□-700□	730
LEFS40□□-750□	730
LEFS40□□-800□	880
LEFS40□□-850□	880
LEFS40□□-900□	880
LEFS40□□-950□	1030
LEFS40□□-1000□	1030
LEFS40□□-1100□	1180
LEFS40□□-1200□	1180

Electric Actuator/Slider Type
Ball Screw Drive

LEFS Series LEFS25, 32, 40

The LECSB-S, LECSC-S, and LECSS-S electric actuator drivers are to be discontinued. The LECSB-T, LECSC-T, and LECSS-T drivers are available as substitutes. In the product number, select T6 instead of S6, T7 instead of S7, or T8 instead of S8 for the ❹ **Motor type**, and select B2 instead of B1, C2 instead of C1, or S2 instead of S1 for the ⓲ **Driver type**.

LECY□ Series ▶ p. 94 | **Clean Room Specification** ▶ p. 644 | **Secondary Battery Compatible** ▶ p. 668
Motorless Type ▶ p. 827

Click here for details. Click here for details.

How to Order

LEFS H | 32 | R | S3 | B | – | 200 | | C | N | K | – | S | 2 | A2 | |
❶ ❷ ❸ ❹ ❺ ❻ ❼ ❽ ❾ ❿ ⓫ ⓬ ⓭ ⓮

❶ Accuracy

Nil	Basic type
H	High-precision type

❷ Size

25
32
40

❸ Motor mounting position

Nil	In-line
R	Right side parallel
L	Left side parallel

❺ Lead [mm]

Symbol	LEFS25	LEFS32	LEFS40
H	20	24	30
A	12	16	20
B	6	8	10

❻ Stroke [mm]

50	50
to	to
1200	1200

∗ For details, refer to the applicable stroke table below.

❼ Motor option

Nil	Without option
B	With lock

❹ Motor type

Symbol	Type	Output [W]	Actuator size	Compatible driver	UL-compliant
S2∗1	AC servo motor (Incremental encoder)	100	25	LECSA□-S1	●
S3		200	32	LECSA□-S3	●
S4		400	40	LECSA2-S4	●
S6∗1	AC servo motor (Absolute encoder)	100	25	LECSB□-S5 LECSC□-S5 LECSS□-S5	—
S7		200	32	LECSB□-S7 LECSC□-S7 LECSS□-S7	—
S8		400	40	LECSB2-S8 LECSC2-S8 LECSS2-S8	—
T6∗2	AC servo motor (Absolute encoder)	100	25	LECSB2-T5 LECSC2-T5 LECSN2-T5-□	—
				LECSS2-T5	●
T7		200	32	LECSB2-T7 LECSC2-T7 LECSN2-T7-□	—
				LECSS2-T7	●
T8		400	40	LECSB2-T8 LECSC2-T8 LECSN2-T8-□	—
				LECSS2-T8	●

∗1 For motor type S2 and S6, the compatible driver part number suffixes are S1 and S5 respectively.
∗2 For motor type T6, the compatible driver part number is LECS□2-T5.

❽ Auto switch compatibility

Nil	None
C	With (Includes 1 mounting bracket)

∗ If 2 or more are required, please order them separately. (Part no.: LEF-D-2-1 For details, refer to page 161.)
∗ Order auto switches separately. (For details, refer to pages 162 to 164.)
∗ When "Nil" is selected, the product will not come with a built-in magnet for an auto switch, and so a mounting bracket cannot be secured. Be sure to select an appropriate model initially as the product cannot be changed to have auto switch compatibility after purchase.

❾ Grease application (Seal band part)

Nil	With
N	Without (Roller specification)

⓬ Cable length∗1 [m]

Nil	Without cable
2	2
5	5
A	10

∗1 The length of the encoder, motor, and lock cables are the same.

❿ Positioning pin hole

Nil	Housing B bottom∗1	Housing B bottom
K	Body bottom 2 locations	Body bottom

∗1 Refer to the body mounting example on page 166 for the mounting method.

⓫ Cable type∗1 ∗2

Nil	Without cable
S	Standard cable
R	Robotic cable (Flexible cable)

∗1 Motor cable and encoder cable are included. (Lock cable is also included if motor option "With lock" is selected.)
∗2 Standard cable entry direction is "(B) Counter axis side." For motor parallel type of the ball screw drive, the cable entry direction is "(A) Axis side." (For details, refer to page 796.)

⓭ Driver type

	Compatible drivers	Power supply voltage [V]	Size 25	32	40
Nil	Without driver	—	●	●	●
A1	LECSA1-S□	100 to 120	●	●	—
A2	LECSA2-S□	200 to 230	●	●	●
B1	LECSB1-S□	100 to 120	●	●	—
B2	LECSB2-S□	200 to 230	●	●	●
	LECSB2-T□	200 to 240	●	●	●
C1	LECSC1-S□	100 to 120	●	●	—
C2	LECSC2-S□	200 to 230	●	●	●
	LECSC2-T□		●	●	●
S1	LECSS1-S□	100 to 120	●	●	—
S2	LECSS2-S□	200 to 230	●	●	●
	LECSS2-T□	200 to 240	●	●	●
N2	LECSN2-T□	200 to 240	●	●	●
E2	LECSN2-T□-E	200 to 240	●	●	●
92	LECSN2-T□-9	200 to 240	●	●	●
P2	LECSN2-T□-P	200 to 240	●	●	●

∗ When a driver type is selected, a cable is included. Select the cable type and cable length.
Example) S2S2: Standard cable (2 m) + Driver (LECSS2)
S2: Standard cable (2 m)
Nil: Without cable and driver

⓮ I/O cable length [m]∗1

Nil	Without cable
H	Without cable (Connector only)
1	1.5

∗1 When "Without driver" is selected for driver type, only "Nil: Without cable" can be selected. Refer to page 797 if I/O cable is required. (Options are shown on page 797.)

Support Guide/ *LEFG Series*
The support guide was designed to support workpieces with significant overhang.
p. 109



Applicable Stroke Table

●: Standard

Model \ Stroke [mm]	50	100	150	200	250	300	350	400	450	500	550	600	650	700	750	800	850	900	950	1000	1100	1200
LEFS25	●	●	●	●	●	●	●	●	●	●	●	●	●	●	●	●	—	—	—	—	—	—
LEFS32	●	●	●	●	●	●	●	●	●	●	●	●	●	●	●	●	●	●	●	●	—	—
LEFS40	—	—	●	●	●	●	●	●	●	●	●	●	●	●	●	●	●	●	●	●	●	●

∗ Please consult with SMC for non-standard strokes as they are produced as special orders.

Compatible Drivers

For auto switches, refer to pages 161 to 164.

Driver type	Pulse input type /Positioning type	Pulse input type	CC-Link direct input type	SSCNET Ⅲ type	Pulse input type	CC-Link direct input type	SSCNET Ⅲ/H type	Network card type
Series	LECSA	LECSB	LECSC	LECSS	LECSB-T	LECSC-T	LECSS-T	LECSN-T
Number of point tables∗1	Up to 7	—	Up to 255 (2 stations occupied)	—	Up to 255	Up to 255 (2 stations occupied)	—	Up to 255
Pulse input	○	○	—	—	○	—	—	—
Applicable network	—	—	CC-Link	SSCNET Ⅲ	—	CC-Link	SSCNET Ⅲ/H	PROFINET EtherCAT® EtherNet/IP™
Control encoder	Incremental 17-bit encoder	Absolute 18-bit encoder	Absolute 18-bit encoder	Absolute 18-bit encoder	Absolute 22-bit encoder	Absolute 18-bit encoder	Absolute 22-bit encoder	Absolute 22-bit encoder
Communication function	USB communication	USB communication, RS422 communication		USB communication	USB communication, RS422 communication		USB communication	USB communication
Power supply voltage [V]	100 to 120 VAC (50/60 Hz), 200 to 230 VAC (50/60 Hz)				200 to 240 VAC (50/60 Hz)	200 to 230 VAC (50/60 Hz)	200 to 240 VAC (50/60 Hz)	200 to 240 VAC (50/60 Hz)
Reference page	777							

∗1 The LECSN-T only supports PROFINET and EtherCAT®.

Specifications

AC Servo Motor

Model			LEFS25S$^{2}_{6}$/T6			LEFS32S$^{3}_{7}$/T7			LEFS40S$^{4}_{8}$/T8		
Actuator specifications	Stroke [mm]*1		50 to 800			50 to 1000			150 to 1200		
	Work load [kg]*2	Horizontal	10	20	20	30	40	45	30	50	60
		Vertical	4	8	15	5	10	20	7	15	30
	Max. speed [mm/s]*3 / Stroke range	Up to 400	1500	900	450	1500	1000	500	1500	1000	500
		401 to 500	1200	720	360	1500	1000	500	1500	1000	500
		501 to 600	900	540	270	1200	800	400	1500	1000	500
		601 to 700	700	420	210	930	620	310	1410	940	470
		701 to 800	550	330	160	750	500	250	1140	760	380
		801 to 900	—	—	—	610	410	200	930	620	310
		901 to 1000	—	—	—	510	340	170	780	520	260
		1001 to 1100	—	—	—	—	—	—	500	440	220
		1101 to 1200	—	—	—	—	—	—	500	380	190
	Max. acceleration/deceleration [mm/s^2]		20000 (Refer to pages 41 to 43 for limit according to work load and duty ratio.)								
	Positioning repeatability [mm]	Basic type	±0.02								
		High-precision type	±0.01								
	Lost motion [mm]*4	Basic type	0.1 or less								
		High-precision type	0.05 or less								
	Lead [mm]		20	12	6	24	16	8	30	20	10
	Impact/Vibration resistance [m/s^2]*5		50/20								
	Actuation type		Ball screw (LEFS□), Ball screw + Belt (LEFS□$^{R}_{L}$)								
	Guide type		Linear guide								
	Static allowable moment*6 [N·m]	Mep (Pitching)	27			46			110		
		Mey (Yawing)	27			46			110		
		Mer (Rolling)	52			101			207		
	Operating temperature range [°C]		5 to 40								
	Operating humidity range [%RH]		90 or less (No condensation)								
Electric specifications	Motor output/Size		100 W/□40			200 W/□60			400 W/□60		
	Motor type		AC servo motor (100/200 VAC)								
	Encoder*9		Motor type S2, S3, S4: Incremental 17-bit encoder (Resolution: 131072 p/rev) Motor type S6, S7, S8: Absolute 18-bit encoder (Resolution: 262144 p/rev) Motor type T6, T7, T8: Absolute 22-bit encoder (Resolution: 4194304 p/rev) (For LECSB2-T□, LECSS2-T□) Motor type T6, T7, T8: Absolute 18-bit encoder (Resolution: 262144 p/rev) (For LECSC2-T□)								
	Power [W]*7		Max. power 445			Max. power 725			Max. power 1275		
Lock unit specifications	Type*8		Non-magnetizing lock								
	Holding force [N]		78	131	255	131	197	385	220	330	660
	Power consumption at 20°C [W]		6.3			7.9			7.9		
	Rated voltage [V]		24 VDC $^{0}_{-10\%}$								

*1 Please consult with SMC for non-standard strokes as they are produced as special orders.
*2 For details, refer to the "Speed–Work Load Graph (Guide)" on page 40.
*3 The allowable speed changes according to the stroke.
*4 A reference value for correcting an error in reciprocal operation
*5 Impact resistance: No malfunction occurred when the actuator was tested with a drop tester in both an axial direction and a perpendicular direction to the lead screw. (The test was performed with the actuator in the initial state.)
Vibration resistance: No malfunction occurred in a test ranging between 45 to 2000 Hz. The test was performed in both an axial direction and a perpendicular direction to the lead screw. (The test was performed with the actuator in the initial state.)
*6 The static allowable moment is the amount of static moment which can be applied to the actuator when it is stopped.
If the product is exposed to impact or repeated load, be sure to take adequate safety measures when using the product.
*7 Indicates the max. power during operation (including the driver)
When selecting the power supply capacity, refer to the power supply capacity in the operation manual of each driver.
*8 Only when motor option "With lock" is selected
*9 For motor type T6, T7, and T8, the resolution will change depending on the driver type.

Weight

Series		LEFS25□□															
Stroke [mm]		50	100	150	200	250	300	350	400	450	500	550	600	650	700	750	800
Motor type	S2	2.00	2.14	2.28	2.44	2.56	2.69	2.84	2.99	3.12	3.24	3.40	3.54	3.68	3.82	3.96	4.14
	S6	2.06	2.20	2.34	2.50	2.62	2.75	2.90	3.05	3.18	3.30	3.46	3.60	3.74	3.88	4.02	4.20
	T6	2.04	2.18	2.32	2.48	2.60	2.73	2.88	3.03	3.16	3.28	3.44	3.58	3.72	3.86	4.00	4.18
Additional weight with lock [kg]		S2: 0.2/S6: 0.3/T6: 0.3															

Series		LEFS32□□																				
Stroke [mm]		50	100	150	200	250	300	350	400	450	500	550	600	650	700	750	800	850	900	950	1000
Motor type	S3	3.40	3.60	3.80	4.00	4.20	4.40	4.60	4.80	5.00	5.20	5.40	5.60	5.80	6.00	6.20	6.40	6.60	6.80	7.00	7.20
	S7	3.34	3.54	3.74	3.94	4.14	4.34	4.54	4.74	4.94	5.14	5.34	5.54	5.74	5.94	6.14	6.34	6.54	6.74	6.94	7.14
	T7	3.31	3.51	3.71	3.91	4.11	4.31	4.51	4.71	4.91	5.11	5.31	5.51	5.71	5.91	6.11	6.31	6.51	6.71	6.91	7.11
Additional weight with lock [kg]		S3: 0.4/S7: 0.7/T7: 0.5																			

Series		LEFS40□□																				
Stroke [mm]		150	200	250	300	350	400	450	500	550	600	650	700	750	800	850	900	950	1000	1100	1200
Motor type	S4	5.82	6.10	6.38	6.65	6.95	7.25	7.51	7.80	8.07	8.25	8.63	8.90	9.20	9.45	9.76	10.05	10.32	10.60	11.16	11.72
	S8	5.92	6.20	6.48	6.75	7.05	7.35	7.61	7.90	8.17	8.35	8.73	9.00	9.30	9.55	9.86	10.15	10.42	10.70	11.26	11.82
	T8	5.91	6.19	6.47	6.74	7.04	7.34	7.60	7.89	8.16	8.34	8.72	8.99	9.29	9.54	9.85	10.14	10.41	10.69	11.25	11.81
Additional weight with lock [kg]		S4: 0.5/S8: 0.7/T8: 0.5																			

Construction: In-line Motor

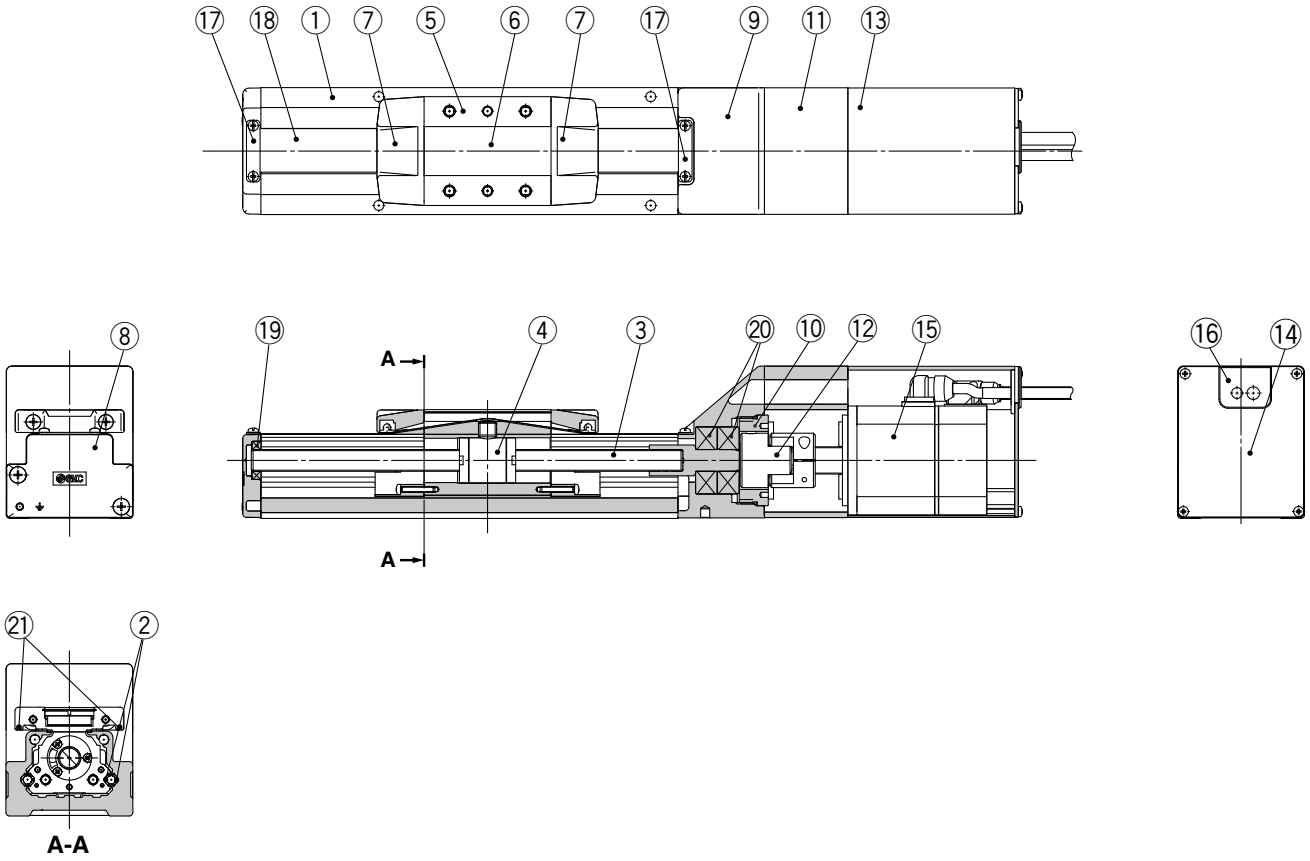

Component Parts

No.	Description	Material	Note
1	**Body**	Aluminum alloy	Anodized
2	**Rail guide**	—	
3	**Ball screw shaft**	—	
4	**Ball screw nut**	—	
5	**Table**	Aluminum alloy	Anodized
6	**Blanking plate**	Aluminum alloy	Anodized
7	**Seal band holder**	Synthetic resin	
8	**Housing A**	Aluminum die-cast	Coating
9	**Housing B**	Aluminum die-cast	Coating
10	**Bearing stopper**	Aluminum alloy	
11	**Motor mount**	Aluminum alloy	Coating

No.	Description	Material	Note
12	**Coupling**	—	
13	**Motor cover**	Aluminum alloy	Anodized
14	**Motor end cover**	Aluminum alloy	Anodized
15	**Motor**	—	
16	**Grommet**	NBR	
17	**Band stopper**	Stainless steel	
18	**Dust seal band**	Stainless steel	
19	**Bearing**	—	Stroke 250 mm or more
20	**Bearing**	—	
21	**Magnet**	—	With auto switch compatibility

Construction: Motor Parallel

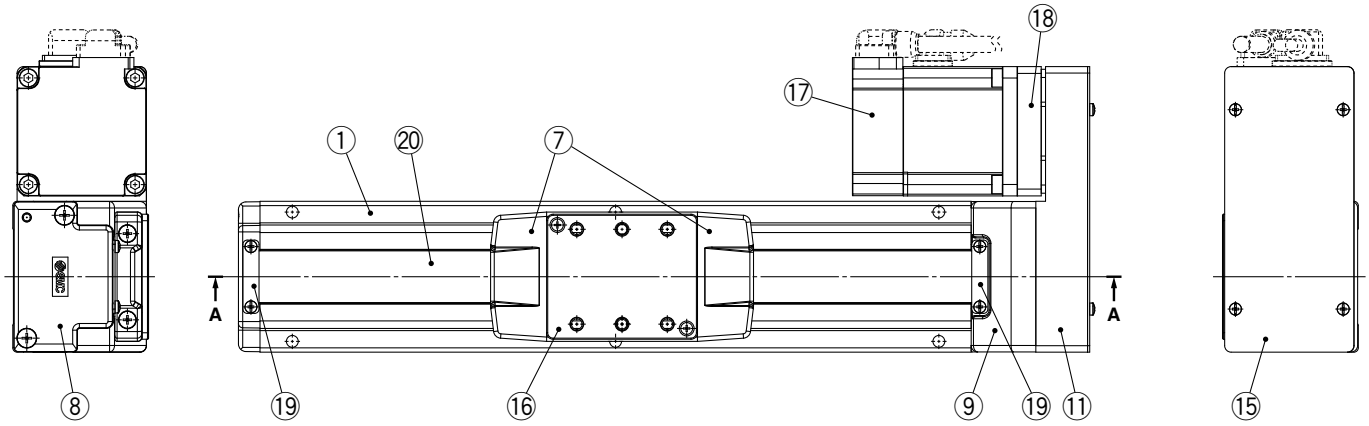

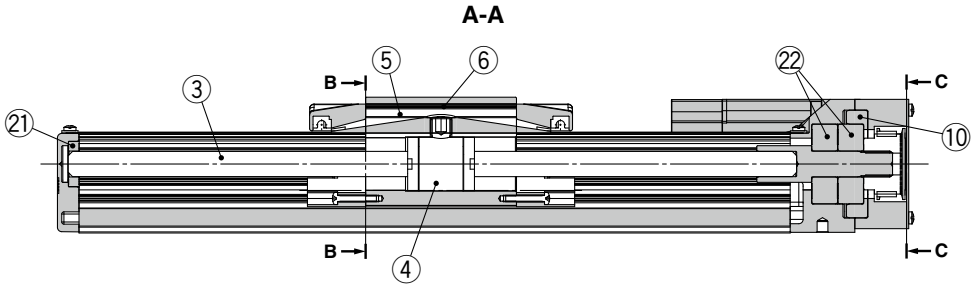

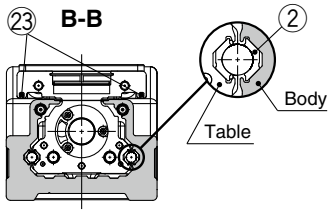

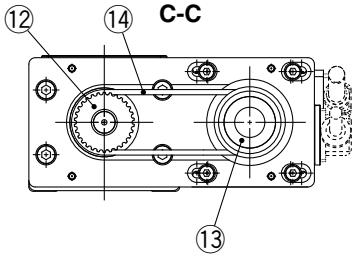

Component Parts

No.	Description	Material	Note
1	**Body**	Aluminum alloy	Anodized
2	**Rail guide**	—	
3	**Ball screw shaft**	—	
4	**Ball screw nut**	—	
5	**Table**	Aluminum alloy	Anodized
6	**Blanking plate**	Aluminum alloy	Anodized
7	**Seal band holder**	Synthetic resin	
8	**Housing A**	Aluminum die-casted	Coating
9	**Housing B**	Aluminum die-casted	Coating
10	**Bearing stopper**	Aluminum alloy	
11	**Return plate**	Aluminum alloy	Coating
12	**Pulley**	Aluminum alloy	
13	**Pulley**	Aluminum alloy	
15	**Cover plate**	Aluminum alloy	Anodized
16	**Table spacer**	Aluminum alloy	Anodized (LEFS32 only)

No.	Description	Material	Note
17	**Motor (Absolute encoder)**	—	
	Motor (Incremental encoder)		
18	**Motor adapter**	Aluminum alloy	Coating
19	**Band stopper**	Stainless steel	
20	**Dust seal band**	Stainless steel	
21	**Bearing**	—	Stroke 250 mm or more
22	**Bearing**	—	
23	**Magnet**	—	With auto switch compatibility

Replacement Parts/Belt

No.	Size	Order no.
14	25	LE-D-6-2
	32	LE-D-6-3
	40	LE-D-6-4

Dimensions: In-line Motor

LEFS25

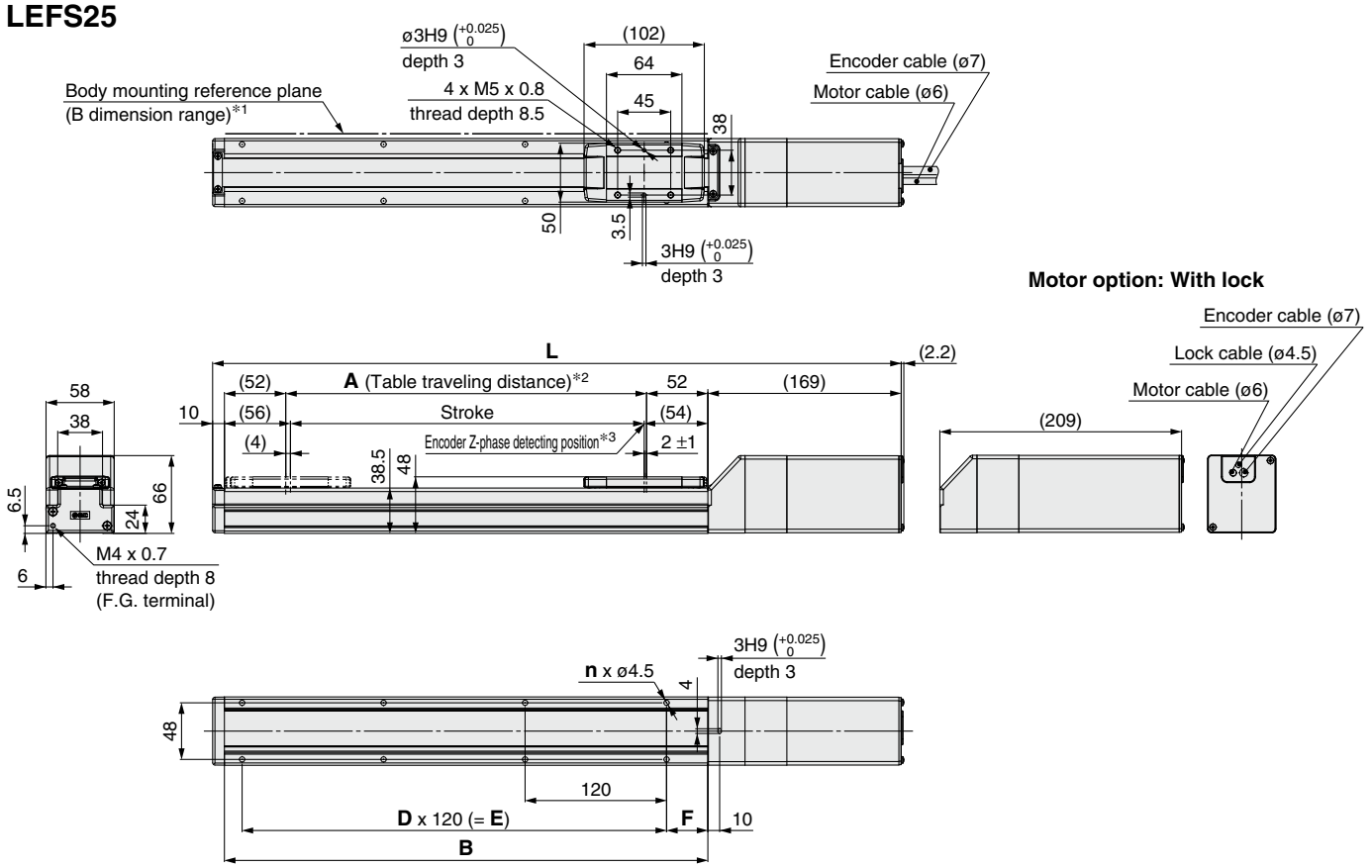

*1 When mounting the actuator using the body mounting reference plane, set the height of the opposite surface or pin to be 3 mm or more because of round chamfering. (Recommended height 5 mm)
In addition, be aware that surfaces other than the body mounting reference plane (B dimension range) may slightly protrude from the body mounting reference plane. Be sure to provide a clearance of 1 mm or more to avoid interference with workpieces, facilities, etc.

*2 This is the distance within which the table can move when it returns to origin.
Make sure workpieces mounted on the table do not interfere with the workpieces and facilities around the table.

*3 The Z-phase first detecting position from the stroke end of the motor side

Dimensions

[mm]

Model	L		A	B	n	D	E	F
	Without lock	With lock						
LEFS25□□-50□	339	379	56	160	4	—	—	20
LEFS25□□-100□	389	429	106	210	4	—	—	35
LEFS25□□-150□	439	479	156	260	4	—	—	
LEFS25□□-200□	489	529	206	310	6	2	240	
LEFS25□□-250□	539	579	256	360	6	2	240	
LEFS25□□-300□	589	629	306	410	8	3	360	
LEFS25□□-350□	639	679	356	460	8	3	360	
LEFS25□□-400□	689	729	406	510	8	3	360	
LEFS25□□-450□	739	779	456	560	10	4	480	
LEFS25□□-500□	789	829	506	610	10	4	480	
LEFS25□□-550□	839	879	556	660	12	5	600	
LEFS25□□-600□	889	929	606	710	12	5	600	
LEFS25□□-650□	939	979	656	760	12	5	600	
LEFS25□□-700□	989	1029	706	810	14	6	720	
LEFS25□□-750□	1039	1079	756	860	14	6	720	
LEFS25□□-800□	1089	1129	806	910	16	7	840	

Dimensions: In-line Motor

LEFS25

Positioning pin hole*1 (Option): Body bottom

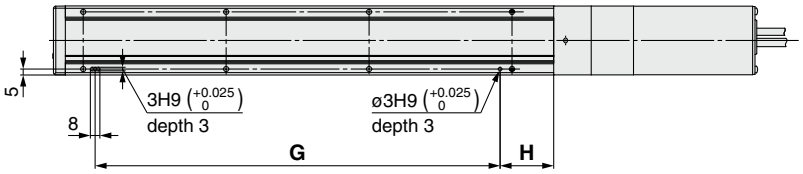

*1 When using the body bottom positioning pin holes, do not simultaneously use the housing B bottom pin hole.

With auto switch (Option)

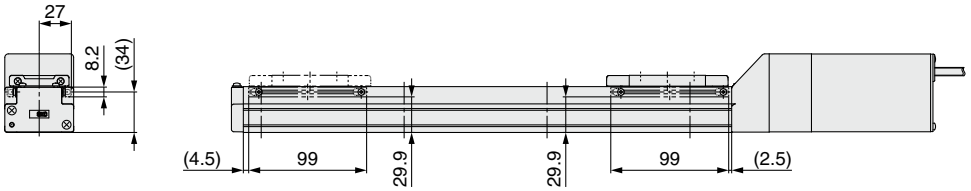

* For strokes of 99 mm or less, only 2 auto switch mounting brackets can be installed on the motor side.

Dimensions [mm]

Model	G	H
LEFS25□□-50□	100	30
LEFS25□□-100□	100	45
LEFS25□□-150□	100	45
LEFS25□□-200□	220	45
LEFS25□□-250□	220	45
LEFS25□□-300□	340	45
LEFS25□□-350□	340	45
LEFS25□□-400□	340	45
LEFS25□□-450□	460	45
LEFS25□□-500□	460	45
LEFS25□□-550□	580	45
LEFS25□□-600□	580	45
LEFS25□□-650□	580	45
LEFS25□□-700□	700	45
LEFS25□□-750□	700	45
LEFS25□□-800□	820	45

Dimensions: In-line Motor

LEFS32

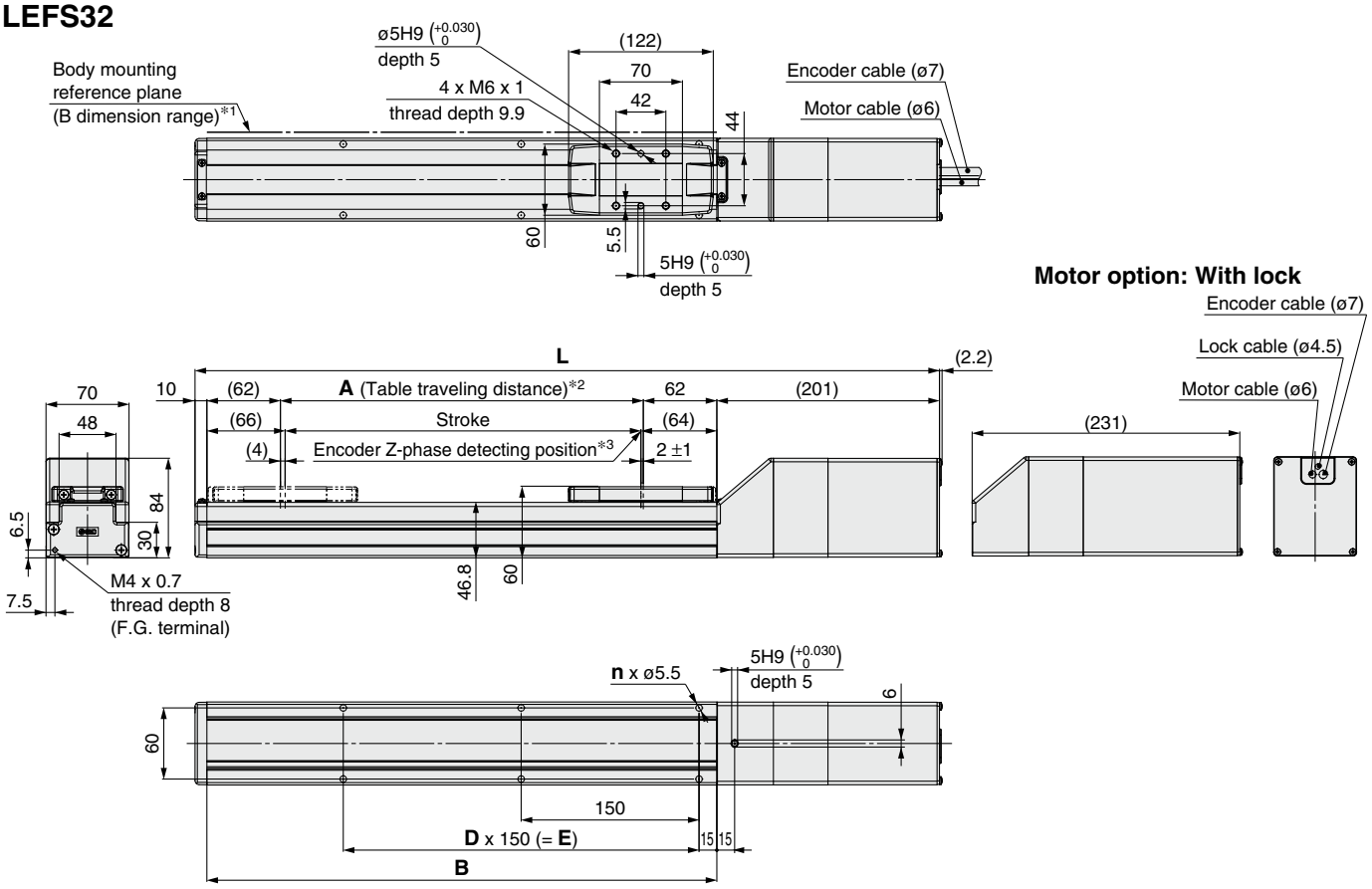

*1 When mounting the actuator using the body mounting reference plane, set the height of the opposite surface or pin to be 3 mm or more because of round chamfering. (Recommended height 5 mm)
In addition, be aware that surfaces other than the body mounting reference plane (B dimension range) may slightly protrude from the body mounting reference plane. Be sure to provide a clearance of 1 mm or more to avoid interference with workpieces, facilities, etc.

*2 This is the distance within which the table can move when it returns to origin.
Make sure workpieces mounted on the table do not interfere with the workpieces and facilities around the table.

*3 The Z-phase first detecting position from the stroke end of the motor side

Dimensions [mm]

Model	L		A	B	n	D	E
	Without lock	With lock					
LEFS32□□-50□	391	421	56	180	4	—	—
LEFS32□□-100□	441	471	106	230	4	—	—
LEFS32□□-150□	491	521	156	280	4	—	—
LEFS32□□-200□	541	571	206	330	6	2	300
LEFS32□□-250□	591	621	256	380	6	2	300
LEFS32□□-300□	641	671	306	430	6	2	300
LEFS32□□-350□	691	721	356	480	8	3	450
LEFS32□□-400□	741	771	406	530	8	3	450
LEFS32□□-450□	791	821	456	580	8	3	450
LEFS32□□-500□	841	871	506	630	10	4	600
LEFS32□□-550□	891	921	556	680	10	4	600
LEFS32□□-600□	941	971	606	730	10	4	600
LEFS32□□-650□	991	1021	656	780	12	5	750
LEFS32□□-700□	1041	1071	706	830	12	5	750
LEFS32□□-750□	1091	1121	756	880	12	5	750
LEFS32□□-800□	1141	1171	806	930	14	6	900
LEFS32□□-850□	1191	1221	856	980	14	6	900
LEFS32□□-900□	1241	1271	906	1030	14	6	900
LEFS32□□-950□	1291	1321	956	1080	16	7	1050
LEFS32□□-1000□	1341	1371	1006	1130	16	7	1050

Dimensions: In-line Motor

LEFS32

Positioning pin hole*1 (Option): Body bottom

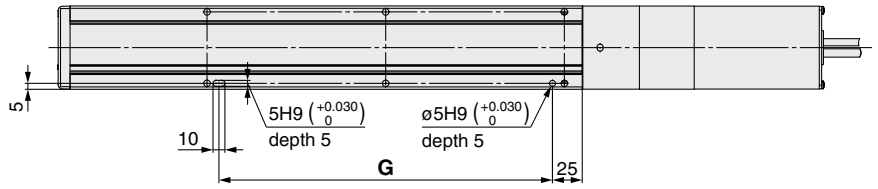

*1 When using the body bottom positioning pin holes, do not simultaneously use the housing B bottom pin hole.

With auto switch (Option)

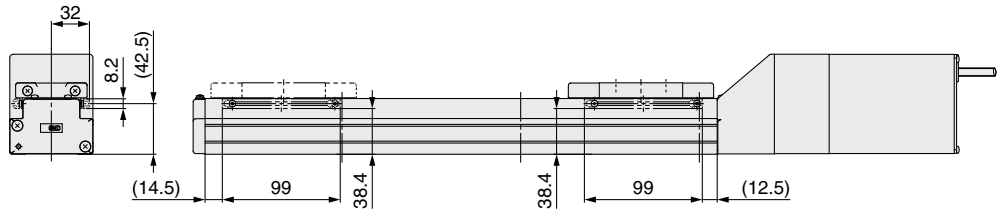

* For strokes of 99 mm or less, only 2 auto switch mounting brackets can be installed on the motor side.

Dimensions [mm]

Model	G
LEFS32□□-50□	130
LEFS32□□-100□	130
LEFS32□□-150□	130
LEFS32□□-200□	280
LEFS32□□-250□	280
LEFS32□□-300□	280
LEFS32□□-350□	430
LEFS32□□-400□	430
LEFS32□□-450□	430
LEFS32□□-500□	580
LEFS32□□-550□	580
LEFS32□□-600□	580
LEFS32□□-650□	730
LEFS32□□-700□	730
LEFS32□□-750□	730
LEFS32□□-800□	880
LEFS32□□-850□	880
LEFS32□□-900□	880
LEFS32□□-950□	1030
LEFS32□□-1000□	1030

Dimensions: In-line Motor

LEFS40

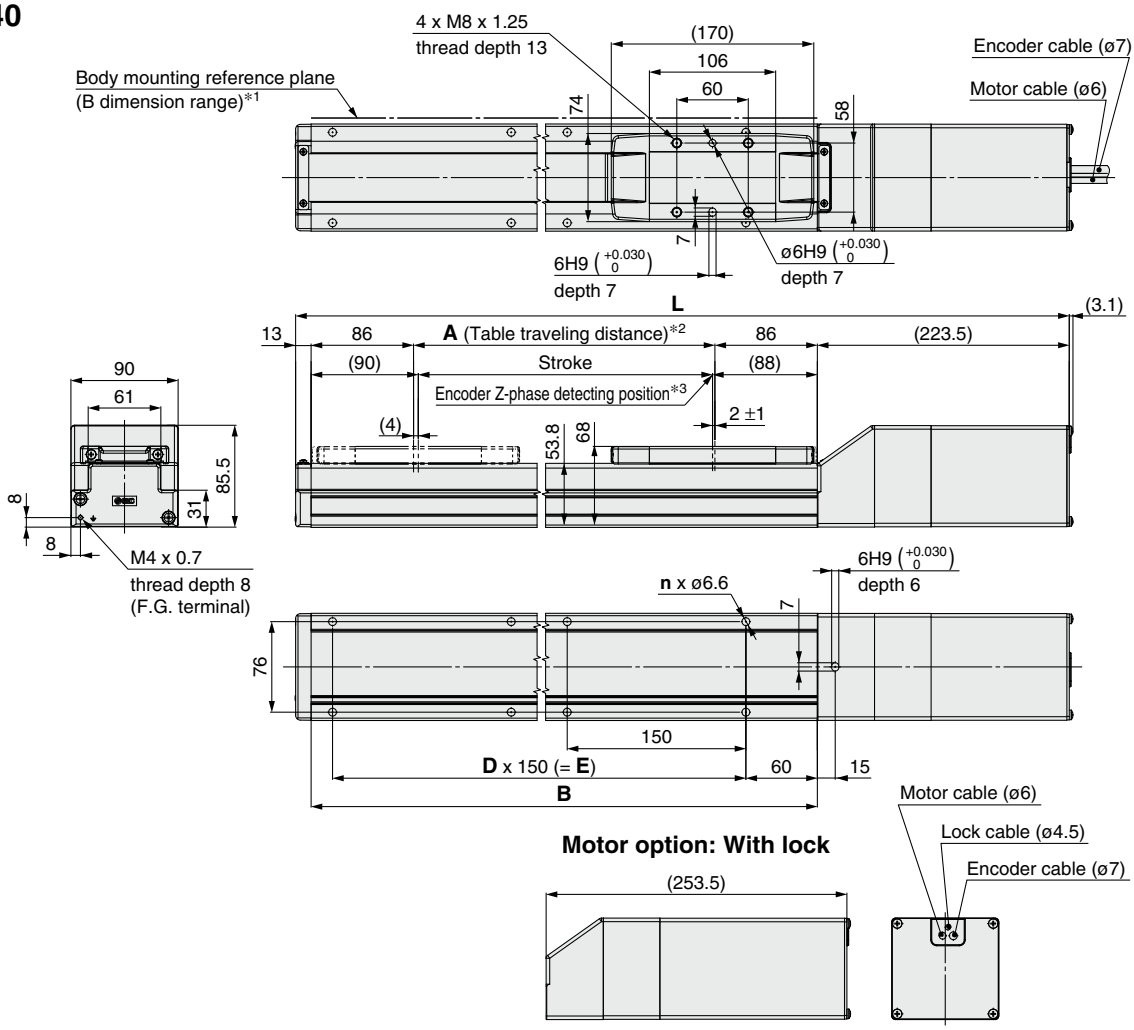

*1 When mounting the actuator using the body mounting reference plane, set the height of the opposite surface or pin to be 3 mm or more because of round chamfering. (Recommended height 5 mm)
In addition, be aware that surfaces other than the body mounting reference plane (B dimension range) may slightly protrude from the body mounting reference plane. Be sure to provide a clearance of 1 mm or more to avoid interference with workpieces, facilities, etc.
*2 This is the distance within which the table can move when it returns to origin.
Make sure workpieces mounted on the table do not interfere with the workpieces and facilities around the table.
*3 The Z-phase first detecting position from the stroke end of the motor side

Dimensions

[mm]

Model	L		A	B	n	D	E
	Without lock	With lock					
LEFS40□□-150□	564.5	594.5	156	328	4	—	150
LEFS40□□-200□	614.5	644.5	206	378	6	2	300
LEFS40□□-250□	664.5	694.5	256	428	6	2	300
LEFS40□□-300□	714.5	744.5	306	478	6	2	300
LEFS40□□-350□	764.5	794.5	356	528	8	3	450
LEFS40□□-400□	814.5	844.5	406	578	8	3	450
LEFS40□□-450□	864.5	894.5	456	628	8	3	450
LEFS40□□-500□	914.5	944.5	506	678	10	4	600
LEFS40□□-550□	964.5	994.5	556	728	10	4	600
LEFS40□□-600□	1014.5	1044.5	606	778	10	4	600
LEFS40□□-650□	1064.5	1094.5	656	828	12	5	750
LEFS40□□-700□	1114.5	1144.5	706	878	12	5	750
LEFS40□□-750□	1164.5	1194.5	756	928	12	5	750
LEFS40□□-800□	1214.5	1244.5	806	978	14	6	900
LEFS40□□-850□	1264.5	1294.5	856	1028	14	6	900
LEFS40□□-900□	1314.5	1344.5	906	1078	14	6	900
LEFS40□□-950□	1364.5	1394.5	956	1128	16	7	1050
LEFS40□□-1000□	1414.5	1444.5	1006	1178	16	7	1050
LEFS40□□-1100□	1514.5	1544.5	1106	1278	18	8	1200
LEFS40□□-1200□	1614.5	1644.5	1206	1378	18	8	1200

Dimensions: In-line Motor

LEFS40

Positioning pin hole*1 (Option): Body bottom

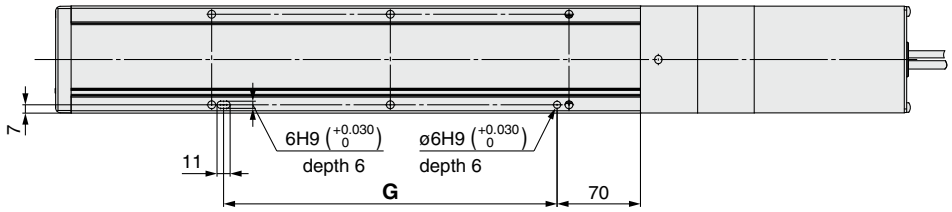

*1 When using the body bottom positioning pin holes, do not simultaneously use the housing B bottom pin hole.

With auto switch (Option)

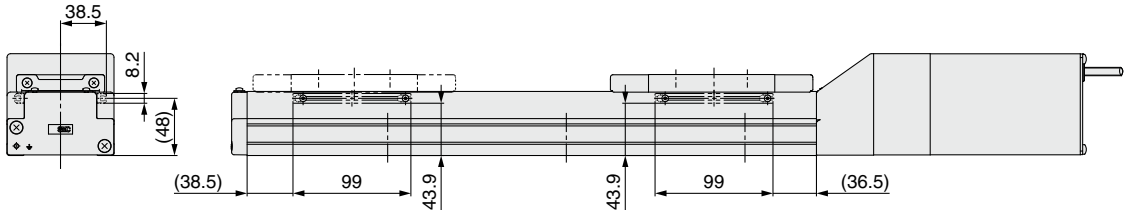

Dimensions [mm]

Model	G
LEFS40□□-150□	130
LEFS40□□-200□	280
LEFS40□□-250□	280
LEFS40□□-300□	280
LEFS40□□-350□	430
LEFS40□□-400□	430
LEFS40□□-450□	430
LEFS40□□-500□	580
LEFS40□□-550□	580
LEFS40□□-600□	580
LEFS40□□-650□	730
LEFS40□□-700□	730
LEFS40□□-750□	730
LEFS40□□-800□	880
LEFS40□□-850□	880
LEFS40□□-900□	880
LEFS40□□-950□	1030
LEFS40□□-1000□	1030
LEFS40□□-1100□	1180
LEFS40□□-1200□	1180

Dimensions: Motor Parallel

LEFS25R

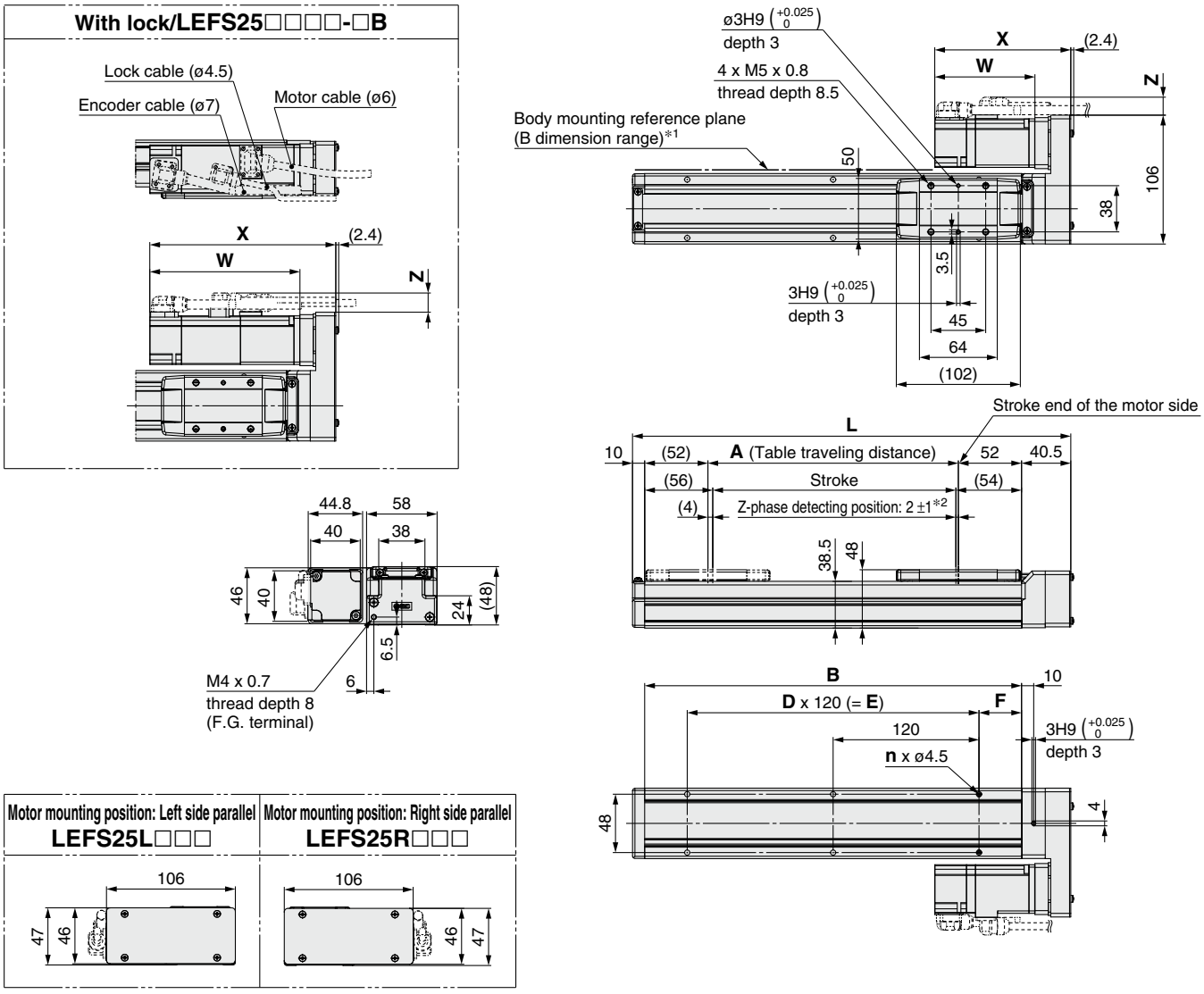

*1 When mounting the actuator using the body mounting reference plane, set the height of the opposite surface or pin to be 3 mm or more. (Recommended height 5 mm)
In addition, be aware that surfaces other than the body mounting reference plane (B dimension range) may slightly protrude from the body mounting reference plane. Be sure to provide a clearance of 1 mm or more to avoid interference with workpieces, facilities, etc.

*2 The Z-phase first detecting position from the stroke end of the motor side
Please consult with SMC for adjusting the Z-phase detecting position at the stroke end of the end side.

Motor Dimensions

[mm]

Motor type	X		W		Z	
	Without lock	With lock	Without lock	With lock	Without lock	With lock
S2	116.5	153.4	87	123.9	14.1	15.8
S6	111.9	153	82.4	123.5	14.1	15.8
T6	111.9	152.5	82.4	123	14.1	15.8

Dimensions

[mm]

Model	L	A	B	n	D	E	F
LEFS25□□□-50□	210.5	56	160	4	—	—	20
LEFS25□□□-100□	260.5	106	210	4	—	—	
LEFS25□□□-150□	310.5	156	260	4	—	—	
LEFS25□□□-200□	360.5	206	310	6	2	240	
LEFS25□□□-250□	410.5	256	360	6	2	240	
LEFS25□□□-300□	460.5	306	410	8	3	360	
LEFS25□□□-350□	510.5	356	460	8	3	360	
LEFS25□□□-400□	560.5	406	510	8	3	360	
LEFS25□□□-450□	610.5	456	560	10	4	480	35
LEFS25□□□-500□	660.5	506	610	10	4	480	
LEFS25□□□-550□	710.5	556	660	12	5	600	
LEFS25□□□-600□	760.5	606	710	12	5	600	
LEFS25□□□-650□	810.5	656	760	12	5	600	
LEFS25□□□-700□	860.5	706	810	14	6	720	
LEFS25□□□-750□	910.5	756	860	14	6	720	
LEFS25□□□-800□	960.5	806	910	16	7	840	

Dimensions: Motor Parallel

LEFS25R

Positioning pin hole*1 (Option): Body bottom

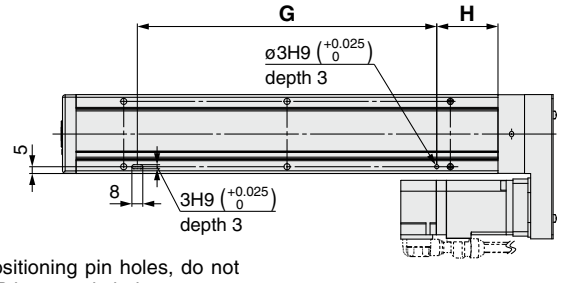

*1 When using the body bottom positioning pin holes, do not simultaneously use the housing B bottom pin hole.

With auto switch (Option)

LEFS25R

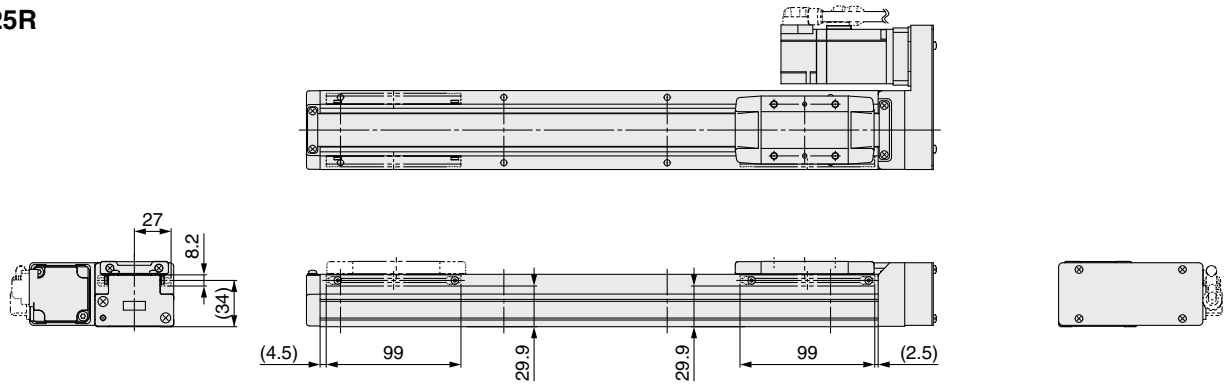

LEFS25L

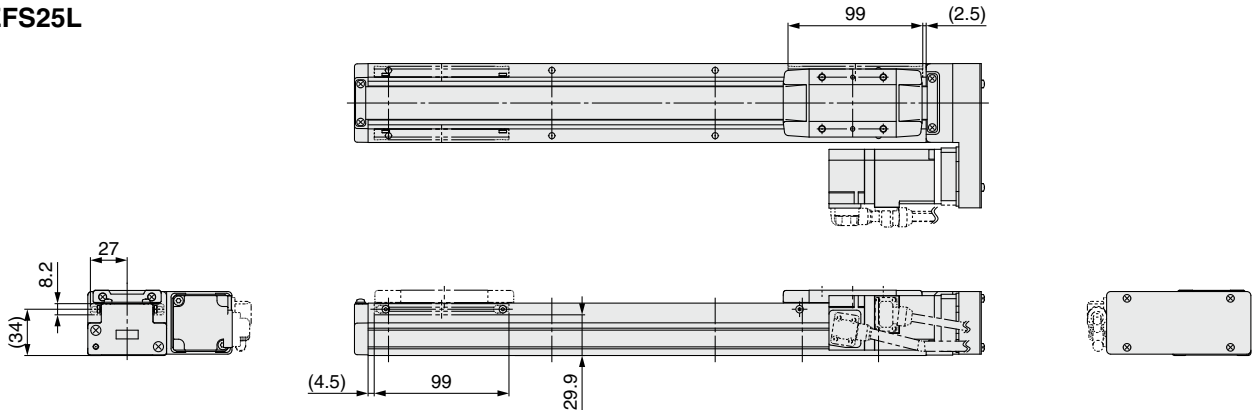

Dimensions [mm]

Model	G	H
LEFS25□□□-50□	100	30
LEFS25□□□-100□	100	45
LEFS25□□□-150□	100	45
LEFS25□□□-200□	220	45
LEFS25□□□-250□	220	45
LEFS25□□□-300□	340	45
LEFS25□□□-350□	340	45
LEFS25□□□-400□	340	45
LEFS25□□□-450□	460	45
LEFS25□□□-500□	460	45
LEFS25□□□-550□	580	45
LEFS25□□□-600□	580	45
LEFS25□□□-650□	580	45
LEFS25□□□-700□	700	45
LEFS25□□□-750□	700	45
LEFS25□□□-800□	820	45

* For strokes of 99 mm or less, only 1 auto switch mounting bracket can be installed on the motor side.

Dimensions: Motor Parallel

LEFS32R

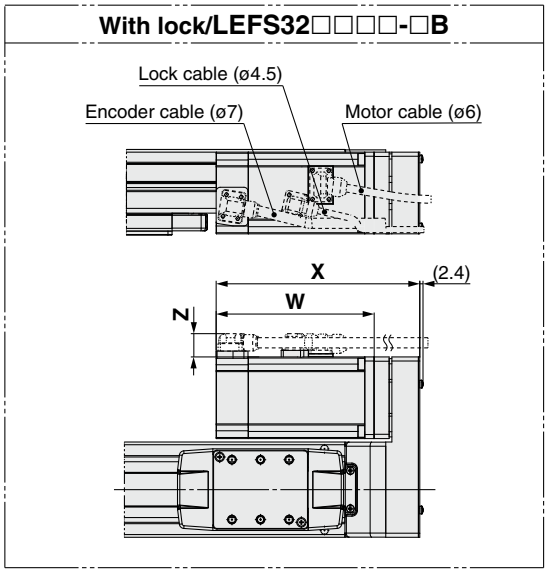

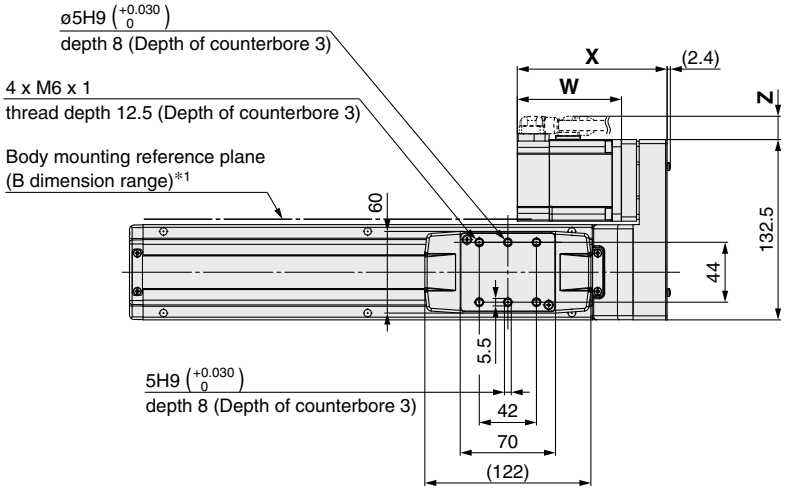

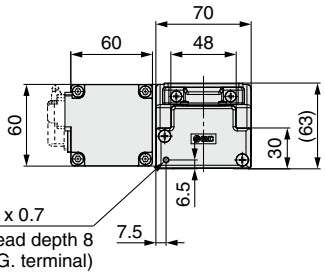

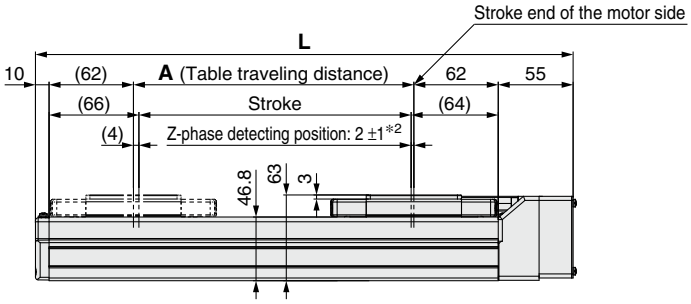

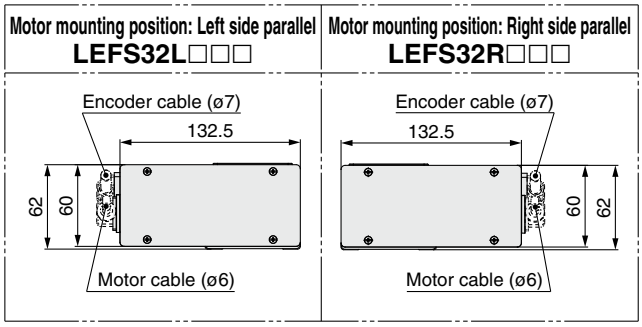

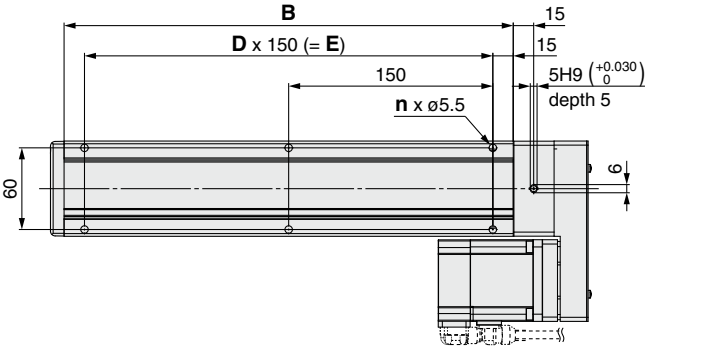

Motor Dimensions

[mm]

Motor type	X		W		Z	
	Without lock	With lock	Without lock	With lock	Without lock	With lock
S3	121.7	150.3	88.2	116.8	17.1	17.1
S7	110.1	149.6	76.6	116.1	17.1	17.1
T7	110.1	146.9	76.6	113.4	17.1	17.1

∗1 When mounting the actuator using the body mounting reference plane, set the height of the opposite surface or pin to be 3 mm or more. (Recommended height 5 mm) In addition, be aware that surfaces other than the body mounting reference plane (B dimension range) may slightly protrude from the body mounting reference plane. Be sure to provide a clearance of 1 mm or more to avoid interference with workpieces, facilities, etc.

∗2 The Z-phase first detecting position from the stroke end of the motor side Please consult with SMC for adjusting the Z-phase detecting position at the stroke end of the end side.

Dimensions

[mm]

Model	L	A	B	n	D	E
LEFS32□□□-50□	245	56	180	4	—	—
LEFS32□□□-100□	295	106	230	4	—	—
LEFS32□□□-150□	345	156	280	4	—	—
LEFS32□□□-200□	395	206	330	6	2	300
LEFS32□□□-250□	445	256	380	6	2	300
LEFS32□□□-300□	495	306	430	6	2	300
LEFS32□□□-350□	545	356	480	8	3	450
LEFS32□□□-400□	595	406	530	8	3	450
LEFS32□□□-450□	645	456	580	8	3	450
LEFS32□□□-500□	695	506	630	10	4	600

Dimensions

[mm]

Model	L	A	B	n	D	E
LEFS32□□□-550□	745	556	680	10	4	600
LEFS32□□□-600□	795	606	730	10	4	600
LEFS32□□□-650□	845	656	780	12	5	750
LEFS32□□□-700□	895	706	830	12	5	750
LEFS32□□□-750□	945	756	880	12	5	750
LEFS32□□□-800□	995	806	930	14	6	900
LEFS32□□□-850□	1045	856	980	14	6	900
LEFS32□□□-900□	1095	906	1030	14	6	900
LEFS32□□□-950□	1145	956	1080	16	7	1050
LEFS32□□□-1000□	1195	1006	1130	16	7	1050

Dimensions: Motor Parallel

LEFS32R

Positioning pin hole*1 (Option): Body bottom

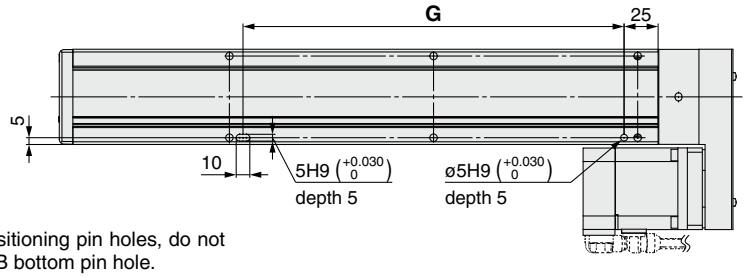

*1 When using the body bottom positioning pin holes, do not simultaneously use the housing B bottom pin hole.

With auto switch (Option)

LEFS32R

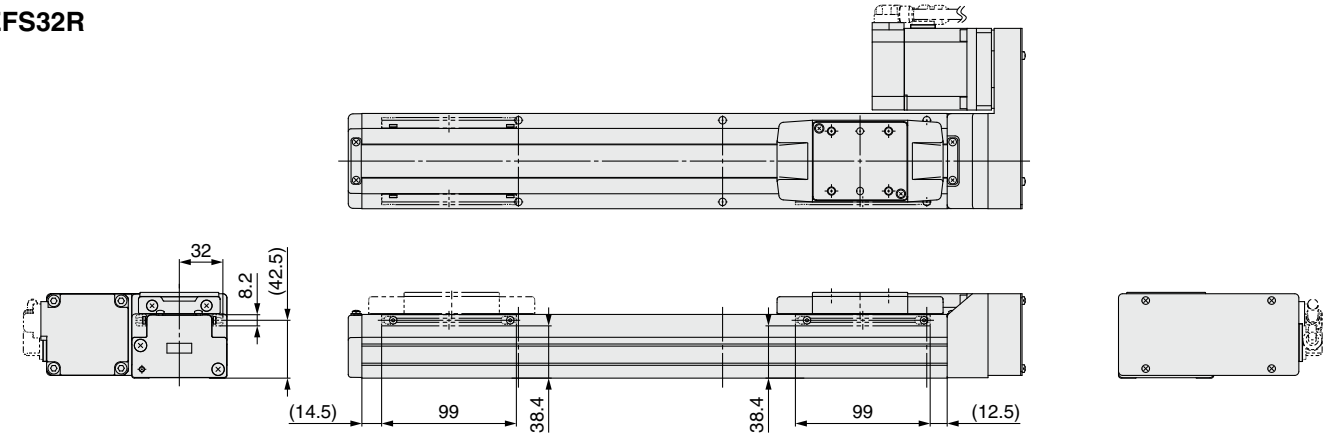

LEFS32L

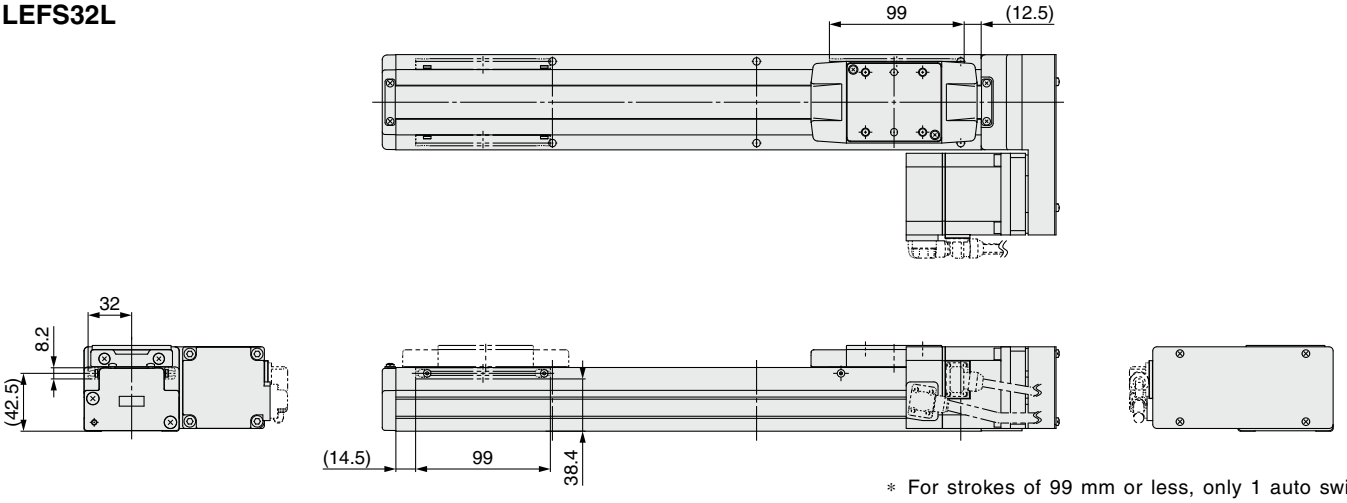

* For strokes of 99 mm or less, only 1 auto switch mounting bracket can be installed on the motor side.

Dimensions [mm]

Model	G
LEFS32□□□-50□	130
LEFS32□□□-100□	130
LEFS32□□□-150□	130
LEFS32□□□-200□	280
LEFS32□□□-250□	280
LEFS32□□□-300□	280
LEFS32□□□-350□	430
LEFS32□□□-400□	430
LEFS32□□□-450□	430
LEFS32□□□-500□	580

Dimensions [mm]

Model	G
LEFS32□□□-550□	580
LEFS32□□□-600□	580
LEFS32□□□-650□	730
LEFS32□□□-700□	730
LEFS32□□□-750□	730
LEFS32□□□-800□	880
LEFS32□□□-850□	880
LEFS32□□□-900□	880
LEFS32□□□-950□	1030
LEFS32□□□-1000□	1030

Dimensions: Motor Parallel

LEFS40R

With lock/LEFS40□□□□-□B

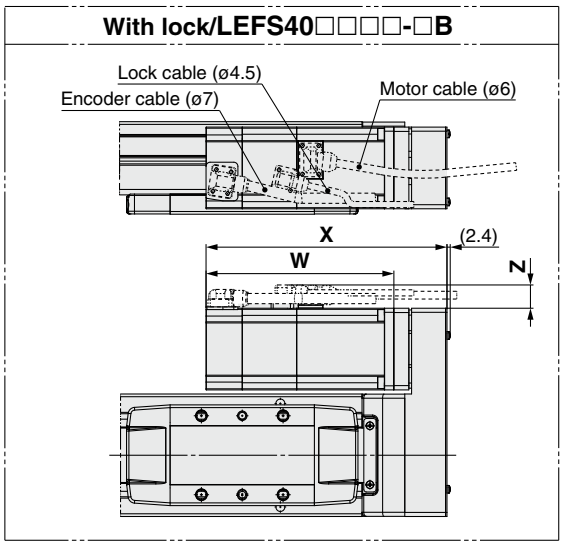

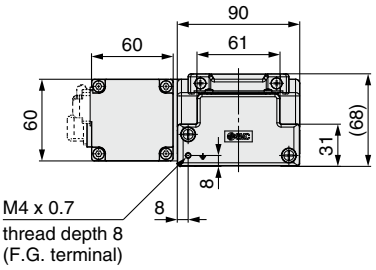

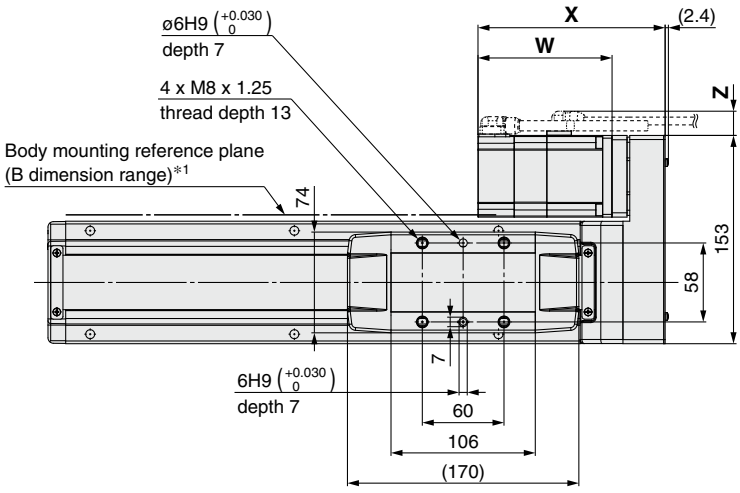

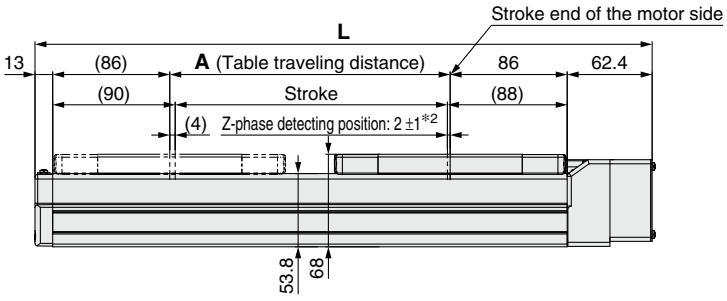

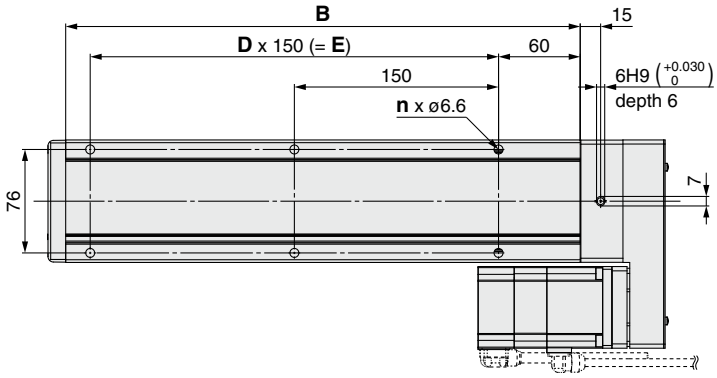

*1 When mounting the actuator using the body mounting reference plane, set the height of the opposite surface or pin to be 3 mm or more. (Recommended height 5 mm) In addition, be aware that surfaces other than the body mounting reference plane (B dimension range) may slightly protrude from the body mounting reference plane. Be sure to provide a clearance of 1 mm or more to avoid interference with workpieces, facilities, etc.

*2 The Z-phase first detecting position from the stroke end of the motor side
Please consult with SMC for adjusting the Z-phase detecting position at the stroke end of the end side.

Motor mounting position: Left side parallel
LEFS40L□□□

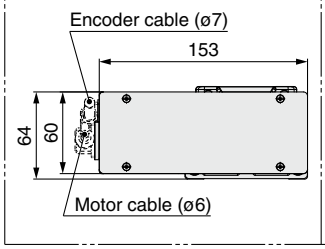

Motor mounting position: Right side parallel
LEFS40R□□□

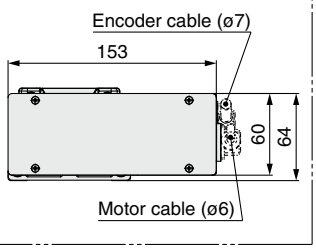

Dimensions

[mm]

Model	L	A	B	n	D	E
LEFS40□□□-150□	403.4	156	328	4	—	150
LEFS40□□□-200□	453.4	206	378	6	2	300
LEFS40□□□-250□	503.4	256	428	6	2	300
LEFS40□□□-300□	553.4	306	478	6	2	300
LEFS40□□□-350□	603.4	356	528	8	3	450
LEFS40□□□-400□	653.4	406	578	8	3	450
LEFS40□□□-450□	703.4	456	628	8	3	450
LEFS40□□□-500□	753.4	506	678	10	4	600
LEFS40□□□-550□	803.4	556	728	10	4	600
LEFS40□□□-600□	853.4	606	778	10	4	600
LEFS40□□□-650□	903.4	656	828	12	5	750
LEFS40□□□-700□	953.4	706	878	12	5	750
LEFS40□□□-750□	1003.4	756	928	12	5	750
LEFS40□□□-800□	1053.4	806	978	14	6	900
LEFS40□□□-850□	1103.4	856	1028	14	6	900
LEFS40□□□-900□	1153.4	906	1078	14	6	900
LEFS40□□□-950□	1203.4	956	1128	16	7	1050
LEFS40□□□-1000□	1253.4	1006	1178	16	7	1050
LEFS40□□□-1100□	1353.4	1106	1278	18	8	1200
LEFS40□□□-1200□	1453.4	1206	1378	18	8	1200

Motor Dimensions

[mm]

Motor type	X		W		Z	
	Without lock	With lock	Without lock	With lock	Without lock	With lock
S4	149.2	177.8	110.2	138.8	17.1	17.1
S8	137.5	177	98.5	138	17.1	17.1
T8	137.3	174.1	98.3	135.1	17.1	17.1

Dimensions: Motor Parallel

LEFS40R

Positioning pin hole*1 (Option): Body bottom

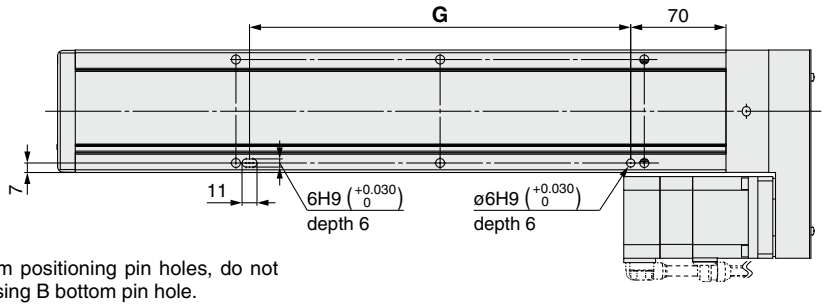

*1 When using the body bottom positioning pin holes, do not simultaneously use the housing B bottom pin hole.

With auto switch (Option)

LEFS40R

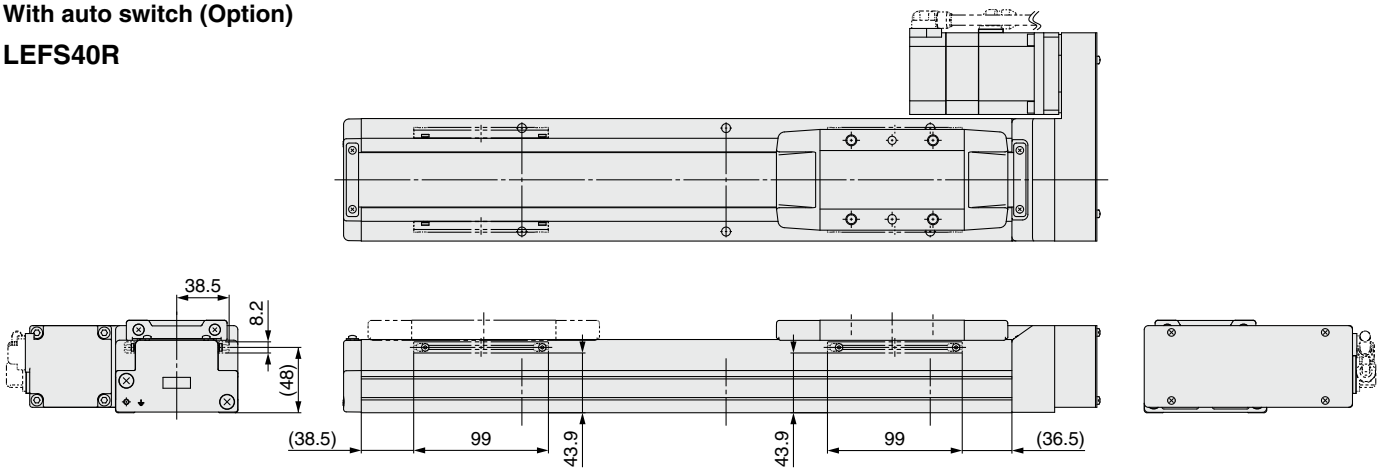

LEFS40L

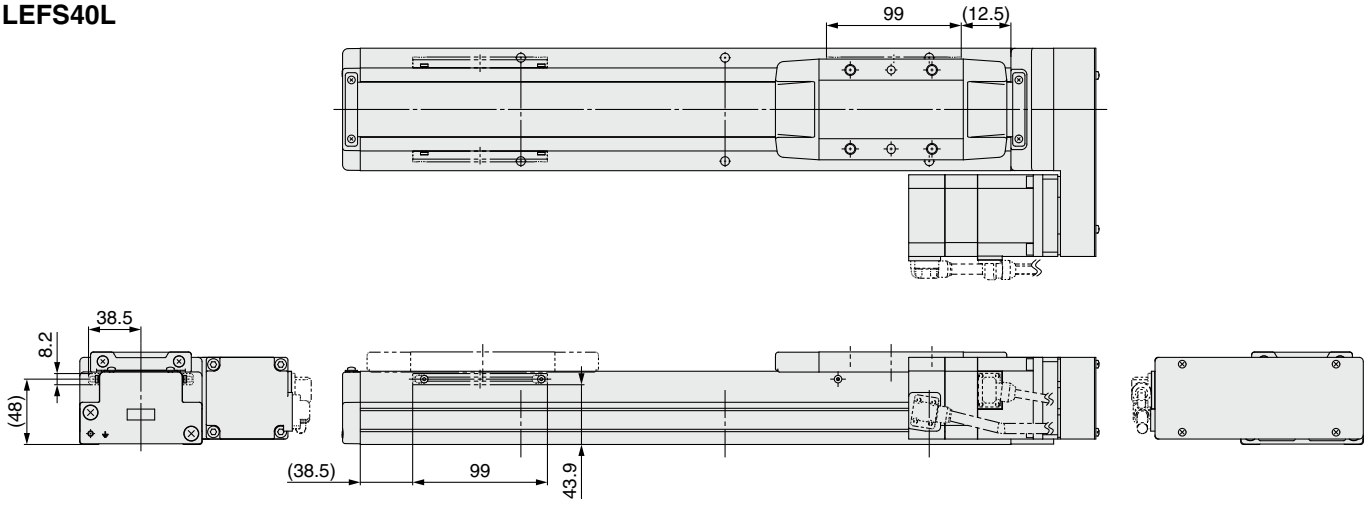

Dimensions [mm]

Model	G
LEFS40□□□-150□	130
LEFS40□□□-200□	280
LEFS40□□□-250□	280
LEFS40□□□-300□	280
LEFS40□□□-350□	430
LEFS40□□□-400□	430
LEFS40□□□-450□	430
LEFS40□□□-500□	580
LEFS40□□□-550□	580
LEFS40□□□-600□	580

Dimensions [mm]

Model	G
LEFS40□□□-650□	730
LEFS40□□□-700□	730
LEFS40□□□-750□	730
LEFS40□□□-800□	880
LEFS40□□□-850□	880
LEFS40□□□-900□	880
LEFS40□□□-950□	1030
LEFS40□□□-1000□	1030
LEFS40□□□-1100□	1180
LEFS40□□□-1200□	1180

Electric Actuator/Slider Type
Ball Screw Drive

LEFS Series LEFS25, 32, 40

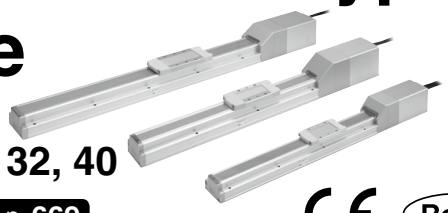

LECS□ Series ▶ p. 78 | Clean Room Specification ▶ p. 646 | Secondary Battery Compatible ▶ p. 669
Motorless Type ▶ p. 827

CE RoHS
Click here for details.

How to Order

LEFS **H** **32** **R** **V7** **B** – **200** **B** **C** **N** **K** – **S** **3** **M2** **□**
❶ ❷ ❸ ❹ ❺ ❻ ❼ ❽ ❾ ❿ ⓫ ⓬ ⓭ ⓮

❶ Accuracy

Nil	Basic type
H	High-precision type

❷ Size

25
32
40

❸ Motor mounting position

Nil	In-line
R	Right side parallel
L	Left side parallel

❹ Motor type

Symbol	Type	Output [W]	Size	Compatible drivers
V6∗1	AC servo motor (Absolute encoder)	100	25	LECYM2-V5/LECYU2-V5
V7		200	32	LECYM2-V7/LECYU2-V7
V8		400	40	LECYM2-V8/LECYU2-V8

∗1 For motor type V6, the compatible driver part number suffix is V5.

❺ Lead [mm]

Symbol	LEFS25	LEFS32	LEFS40
H	20	24	30
A	12	16	20
B	6	8	10

❻ Stroke [mm]

50	50
to	to
1200	1200

❼ Motor option

Nil	Without option
B	With lock

❽ Auto switch compatibility

Nil	None
C	With (Includes 1 mounting bracket)

∗ If 2 or more are required, please order them separately. (Part no.: LEF-D-2-1 For details, refer to page 161.)
∗ Order auto switches separately. (For details, refer to pages 162 to 164.)
∗ When "Nil" is selected, the product will not come with a built-in magnet for an auto switch, and so a mounting bracket cannot be secured. Be sure to select an appropriate model initially as the product cannot be changed to have auto switch compatibility after purchase.

❾ Grease application (Seal band part)

Nil	With
N	Without (Roller specification)

❿ Positioning pin hole

Nil	Housing B bottom∗1	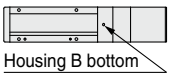 Housing B bottom
K	Body bottom 2 locations	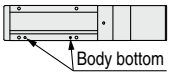 Body bottom

∗1 Refer to the body mounting example on page 166 for the mounting method.

⓫ Cable type

Nil	Without cable
S	Standard cable
R	Robotic cable (Flexible cable)

⓬ Actuator cable length [m]

Nil	Without cable
3	3
5	5
A	10
C	20

⓭ Driver type

	Compatible drivers	Power supply voltage [V]
Nil	Without driver	—
M2	LECYM2-V□	200 to 230
U2	LECYU2-V□	200 to 230

⓮ I/O cable length [m]∗1

Nil	Without cable
H	Without cable (Connector only)
1	1.5

∗1 When "Without driver" is selected for driver type, only "Nil: Without cable" can be selected. Refer to page 808 if I/O cable is required. (Options are shown on page 808.)

Applicable Stroke Table

●: Standard

Model \ Stroke [mm]	50	100	150	200	250	300	350	400	450	500	550	600	650	700	750	800	850	900	950	1000	1100	1200
LEFS25	●	●	●	●	●	●	●	●	●	●	●	●	●	●	●	●	—	—	—	—	—	—
LEFS32	●	●	●	●	●	●	●	●	●	●	●	●	●	●	●	●	●	●	●	●	—	—
LEFS40	—	—	●	●	●	●	●	●	●	●	●	●	●	●	●	●	●	●	●	●	●	●

∗ Please consult with SMC for non-standard strokes as they are produced as special orders.

For auto switches, refer to pages 161 to 164.

Compatible Drivers

Driver type	MECHATROLINK-Ⅱ type	MECHATROLINK-Ⅲ type
		
Series	**LECYM**	**LECYU**
Applicable network	MECHATROLINK-Ⅱ	MECHATROLINK-Ⅲ
Control encoder	Absolute 20-bit encoder	
Communication device	USB communication, RS-422 communication	
Power supply voltage [V]	200 to 230 VAC (50/60 Hz)	
Reference page	801	

Specifications

AC Servo Motor

Model				LEFS25□V6			LEFS32□V7			LEFS40□V8		
Actuator specifications	Stroke [mm]*1			50 to 800			50 to 1000			150 to 1200		
	Work load [kg]*2		Horizontal	10	20	20	30	40	45	30	50	60
			Vertical	4	8	15	5	10	20	7	15	30
	Max. speed [mm/s]*3	Stroke range	Up to 400	1500	900	450	1500	1000	500	1500	1000	500
			401 to 500	1200	720	360	1500	1000	500	1500	1000	500
			501 to 600	900	540	270	1200	800	400	1500	1000	500
			601 to 700	700	420	210	930	620	310	1410	940	470
			701 to 800	550	330	160	750	500	250	1140	760	380
			801 to 900	—	—	—	610	410	200	930	620	310
			901 to 1000	—	—	—	510	340	170	780	520	260
			1001 to 1100	—	—	—	—	—	—	500	440	220
			1101 to 1200	—	—	—	—	—	—	500	380	190
	Max. acceleration/deceleration [mm/s²]			20000 (Refer to pages 41 to 43 for limit according to work load and duty ratio.)								
	Positioning repeatability [mm]		Basic type	±0.02								
			High-precision type	±0.01								
	Lost motion [mm]*4		Basic type	0.1 or less								
			High-precision type	0.05 or less								
	Lead [mm]			20	12	6	24	16	8	30	20	10
	Impact/Vibration resistance [m/s²]*5			50/20								
	Actuation type			Ball screw (LEFS□), Ball screw + Belt (LEFS□$^{R}_{L}$)								
	Guide type			Linear guide								
	Static allowable moment*6 [N·m]		Mep (Pitching)	27			46			110		
			Mey (Yawing)	27			46			110		
			Mer (Rolling)	52			101			207		
	Operating temperature range [°C]			5 to 40								
	Operating humidity range [%RH]			90 or less (No condensation)								
Electric specifications	Motor output/Size			100 W/□40			200 W/□60			400 W/□60		
	Motor type			AC servo motor (200 VAC)								
	Encoder			Absolute 20-bit encoder (Resolution: 1048576 p/rev)								
	Power [W]*7			Max. power 445			Max. power 725			Max. power 1275		
Lock unit specifications	Type*8			Non-magnetizing lock								
	Holding force [N]			78	131	255	131	197	385	220	330	660
	Power consumption at 20°C [W]			5.5			6			6		
	Rated voltage [V]			24 VDC $^{+10\%}_{0}$								

*1 Please consult with SMC for non-standard strokes as they are produced as special orders.
*2 For details, refer to the "Speed–Work Load Graph (Guide)" on page 48.
*3 The allowable speed changes according to the stroke.
*4 A reference value for correcting an error in reciprocal operation
*5 Impact resistance: No malfunction occurred when the actuator was tested with a drop tester in both an axial direction and a perpendicular direction to the lead screw. (The test was performed with the actuator in the initial state.)
Vibration resistance: No malfunction occurred in a test ranging between 45 to 2000 Hz. The test was performed in both an axial direction and a perpendicular direction to the lead screw. (The test was performed with the actuator in the initial state.)
*6 The static allowable moment is the amount of static moment which can be applied to the actuator when it is stopped.
If the product is exposed to impact or repeated load, be sure to take adequate safety measures when using the product.
*7 Indicates the max. power during operation (including the driver)
When selecting the power supply capacity, refer to the power supply capacity in the operation manual of each driver.
*8 Only when motor option "With lock" is selected

Weight

Series	LEFS25□V6															
Stroke [mm]	50	100	150	200	250	300	350	400	450	500	550	600	650	700	750	800
Product weight [kg]	2.06	2.20	2.34	2.50	2.62	2.75	2.90	3.05	3.18	3.30	3.46	3.60	3.74	3.88	4.02	4.20
Additional weight with lock [kg]	0.3															

Series	LEFS32□V7																			
Stroke [mm]	50	100	150	200	250	300	350	400	450	500	550	600	650	700	750	800	850	900	950	1000
Product weight [kg]	3.40	3.60	3.80	4.00	4.20	4.40	4.60	4.80	5.00	5.20	5.40	5.60	5.80	6.00	6.20	6.40	6.60	6.80	7.00	7.20
Additional weight with lock [kg]	0.7																			

Series	LEFS40□V8																			
Stroke [mm]	150	200	250	300	350	400	450	500	550	600	650	700	750	800	850	900	950	1000	1100	1200
Product weight [kg]	5.92	6.20	6.48	6.75	7.05	7.35	7.61	7.90	8.17	8.35	8.73	9.00	9.30	9.55	9.86	10.15	10.42	10.70	11.26	11.82
Additional weight with lock [kg]	0.7																			

Construction

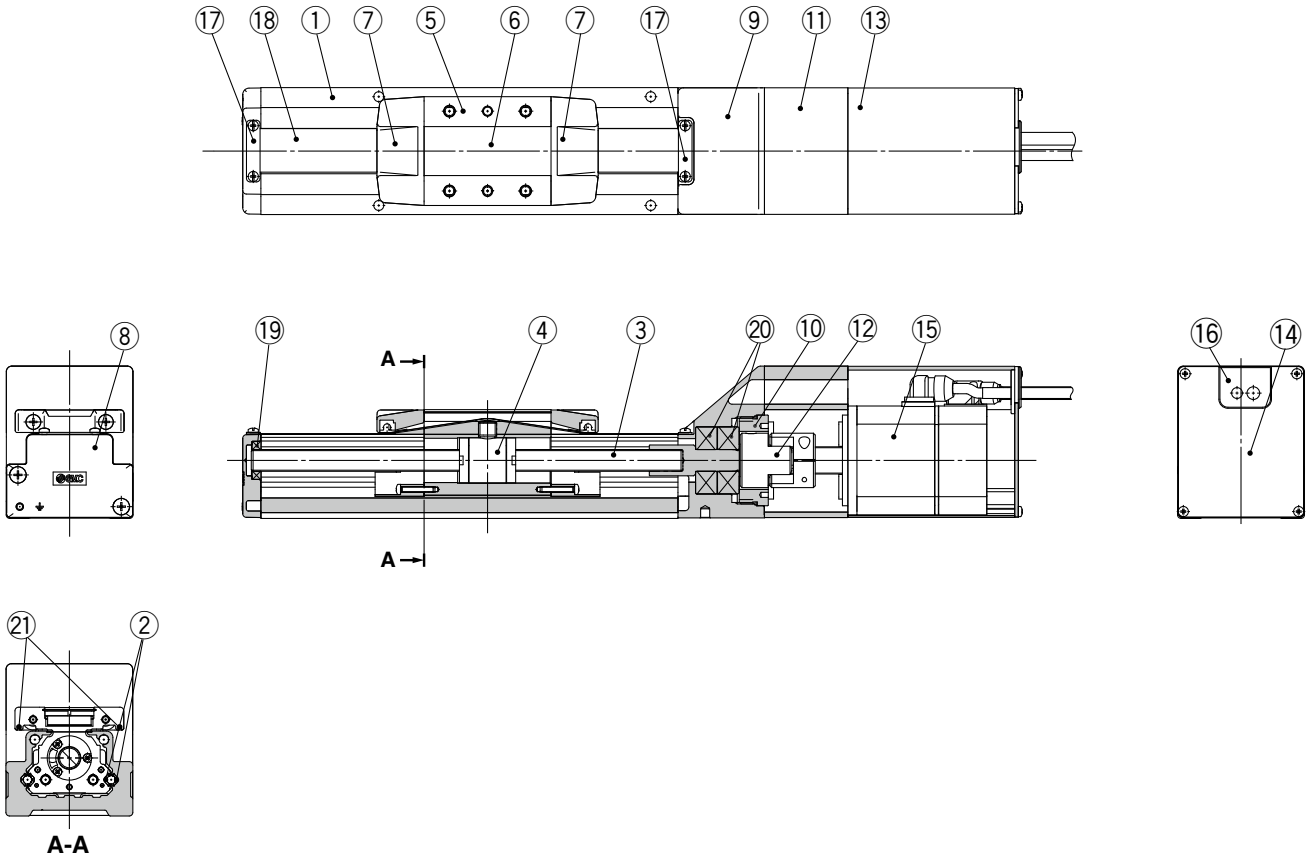

Component Parts

No.	Description	Material	Note
1	**Body**	Aluminum alloy	Anodized
2	**Rail guide**	—	
3	**Ball screw shaft**	—	
4	**Ball screw nut**	—	
5	**Table**	Aluminum alloy	Anodized
6	**Blanking plate**	Aluminum alloy	Anodized
7	**Seal band holder**	Synthetic resin	
8	**Housing A**	Aluminum die-cast	Coating
9	**Housing B**	Aluminum die-cast	Coating
10	**Bearing stopper**	Aluminum alloy	
11	**Motor mount**	Aluminum alloy	Coating

No.	Description	Material	Note
12	**Coupling**	—	
13	**Motor cover**	Aluminum alloy	Anodized
14	**Motor end cover**	Aluminum alloy	Anodized
15	**Motor**	—	
16	**Grommet**	NBR	
17	**Band stopper**	Stainless steel	
18	**Dust seal band**	Stainless steel	
19	**Bearing**	—	Stroke 250 mm or more
20	**Bearing**	—	
21	**Magnet**	—	With auto switch compatibility

Dimensions: In-line Motor

LEFS25

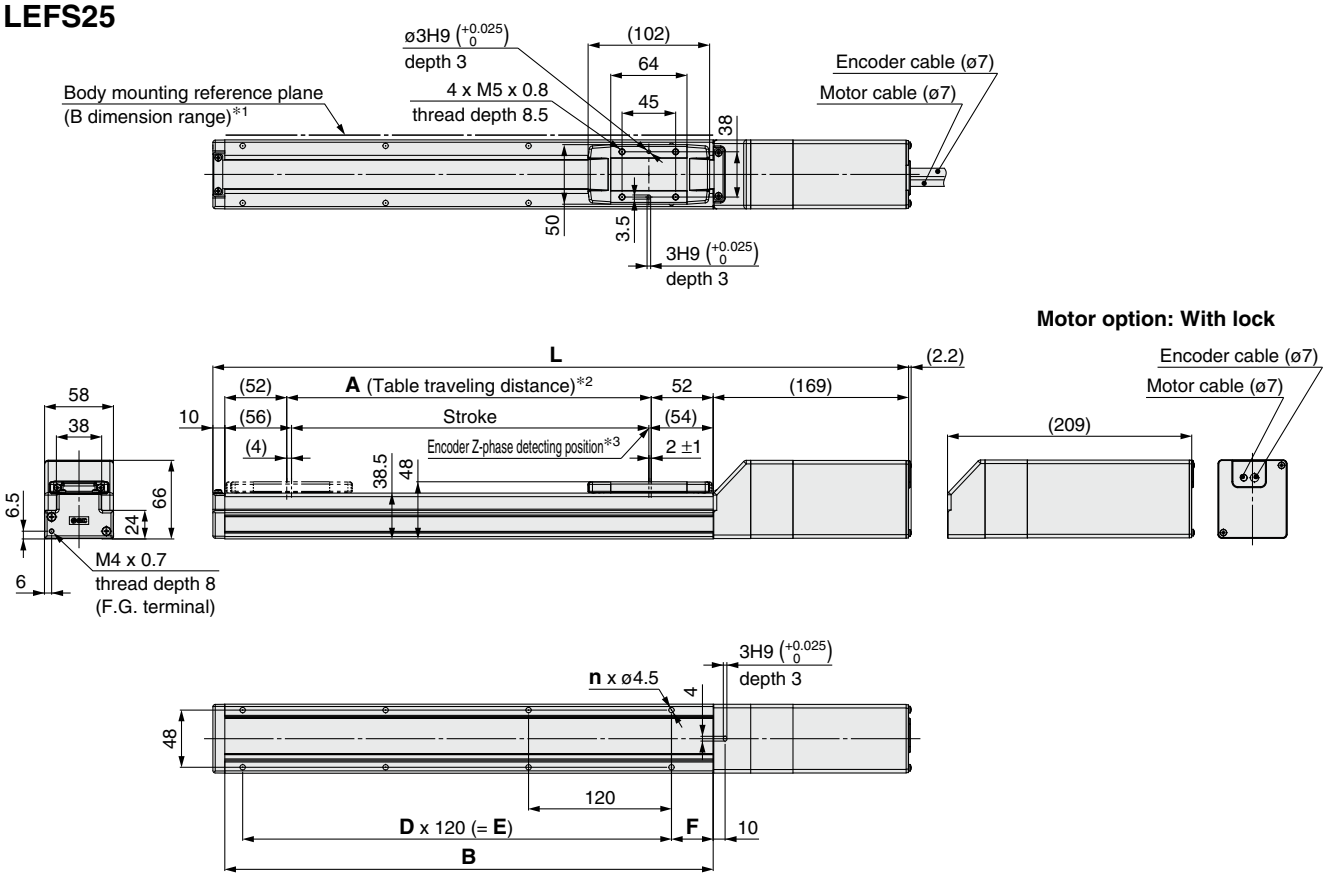

*1 When mounting the actuator using the body mounting reference plane, set the height of the opposite surface or pin to be 3 mm or more because of round chamfering. (Recommended height 5 mm)
In addition, be aware that surfaces other than the body mounting reference plane (B dimension range) may slightly protrude from the body mounting reference plane. Be sure to provide a clearance of 1 mm or more to avoid interference with workpieces, facilities, etc.

*2 This is the distance within which the table can move when it returns to origin.
Make sure workpieces mounted on the table do not interfere with the workpieces and facilities around the table.

*3 The Z-phase first detecting position from the stroke end of the motor side

Dimensions [mm]

Model	L		A	B	n	D	E	F
	Without lock	With lock						
LEFS25□□-50□	339	379	56	160	4	—	—	20
LEFS25□□-100□	389	429	106	210	4	—	—	35
LEFS25□□-150□	439	479	156	260	4	—	—	
LEFS25□□-200□	489	529	206	310	6	2	240	
LEFS25□□-250□	539	579	256	360	6	2	240	
LEFS25□□-300□	589	629	306	410	8	3	360	
LEFS25□□-350□	639	679	356	460	8	3	360	
LEFS25□□-400□	689	729	406	510	8	3	360	
LEFS25□□-450□	739	779	456	560	10	4	480	
LEFS25□□-500□	789	829	506	610	10	4	480	
LEFS25□□-550□	839	879	556	660	12	5	600	
LEFS25□□-600□	889	929	606	710	12	5	600	
LEFS25□□-650□	939	979	656	760	12	5	600	
LEFS25□□-700□	989	1029	706	810	14	6	720	
LEFS25□□-750□	1039	1079	756	860	14	6	720	
LEFS25□□-800□	1089	1129	806	910	16	7	840	

Dimensions: In-line Motor

LEFS25

Positioning pin hole*1 (Option): Body bottom

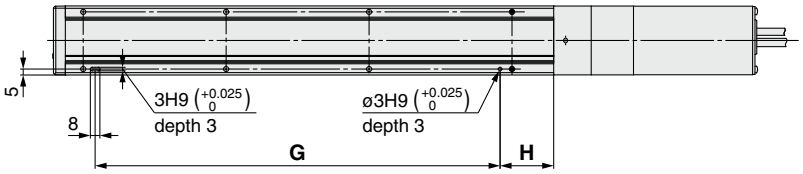

*1 When using the body bottom positioning pin holes, do not simultaneously use the housing B bottom pin hole.

With auto switch (Option)

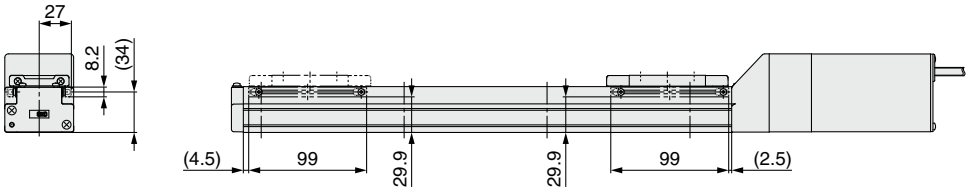

* For strokes of 99 mm or less, only 2 auto switch mounting brackets can be installed on the motor side.

Dimensions [mm]

Model	G	H
LEFS25□□-50□	100	30
LEFS25□□-100□	100	45
LEFS25□□-150□	100	45
LEFS25□□-200□	220	45
LEFS25□□-250□	220	45
LEFS25□□-300□	340	45
LEFS25□□-350□	340	45
LEFS25□□-400□	340	45
LEFS25□□-450□	460	45
LEFS25□□-500□	460	45
LEFS25□□-550□	580	45
LEFS25□□-600□	580	45
LEFS25□□-650□	580	45
LEFS25□□-700□	700	45
LEFS25□□-750□	700	45
LEFS25□□-800□	820	45

Dimensions: In-line Motor

LEFS32

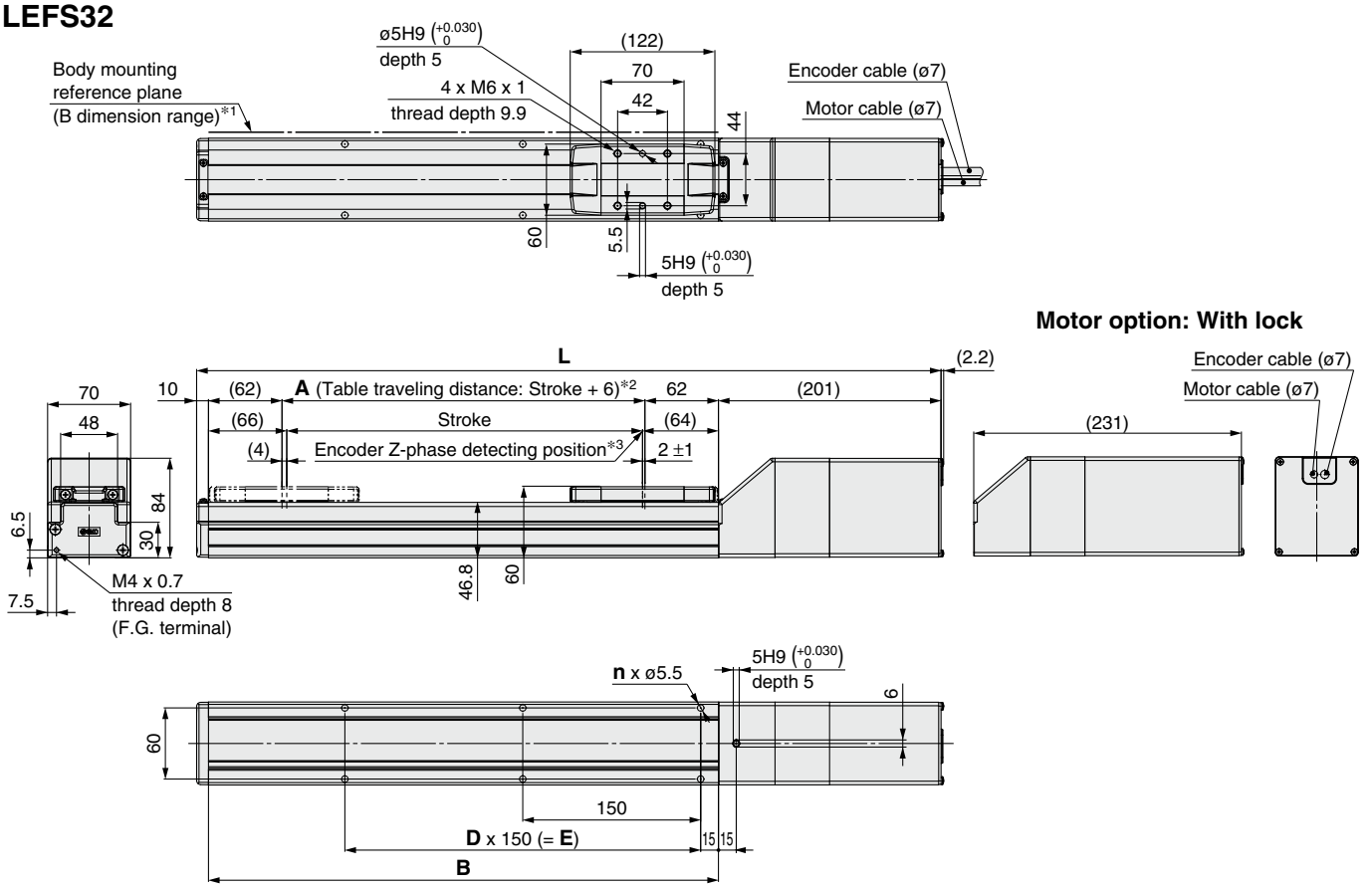

*1 When mounting the actuator using the body mounting reference plane, set the height of the opposite surface or pin to be 3 mm or more because of round chamfering. (Recommended height 5 mm)
In addition, be aware that surfaces other than the body mounting reference plane (B dimension range) may slightly protrude from the body mounting reference plane. Be sure to provide a clearance of 1 mm or more to avoid interference with workpieces, facilities, etc.

*2 This is the distance within which the table can move when it returns to origin.
Make sure workpieces mounted on the table do not interfere with the workpieces and facilities around the table.

*3 The Z-phase first detecting position from the stroke end of the motor side

Dimensions [mm]

Model	L		A	B	n	D	E
	Without lock	With lock					
LEFS32□□-50□	391	421	56	180	4	—	—
LEFS32□□-100□	441	471	106	230	4	—	—
LEFS32□□-150□	491	521	156	280	4	—	—
LEFS32□□-200□	541	571	206	330	6	2	300
LEFS32□□-250□	591	621	256	380	6	2	300
LEFS32□□-300□	641	671	306	430	6	2	300
LEFS32□□-350□	691	721	356	480	8	3	450
LEFS32□□-400□	741	771	406	530	8	3	450
LEFS32□□-450□	791	821	456	580	8	3	450
LEFS32□□-500□	841	871	506	630	10	4	600
LEFS32□□-550□	891	921	556	680	10	4	600
LEFS32□□-600□	941	971	606	730	10	4	600
LEFS32□□-650□	991	1021	656	780	12	5	750
LEFS32□□-700□	1041	1071	706	830	12	5	750
LEFS32□□-750□	1091	1121	756	880	12	5	750
LEFS32□□-800□	1141	1171	806	930	14	6	900
LEFS32□□-850□	1191	1221	856	980	14	6	900
LEFS32□□-900□	1241	1271	906	1030	14	6	900
LEFS32□□-950□	1291	1321	956	1080	16	7	1050
LEFS32□□-1000□	1341	1371	1006	1130	16	7	1050

Dimensions: In-line Motor

LEFS32

Positioning pin hole*1 (Option): Body bottom

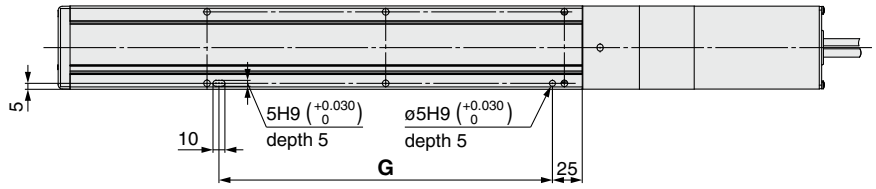

*1 When using the body bottom positioning pin holes, do not simultaneously use the housing B bottom pin hole.

With auto switch (Option)

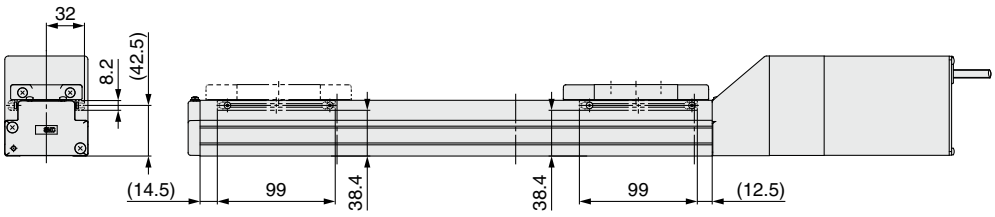

* For strokes of 99 mm or less, only 2 auto switch mounting brackets can be installed on the motor side.

Dimensions [mm]

Model	G
LEFS32□□-50□	130
LEFS32□□-100□	130
LEFS32□□-150□	130
LEFS32□□-200□	280
LEFS32□□-250□	280
LEFS32□□-300□	280
LEFS32□□-350□	430
LEFS32□□-400□	430
LEFS32□□-450□	430
LEFS32□□-500□	580
LEFS32□□-550□	580
LEFS32□□-600□	580
LEFS32□□-650□	730
LEFS32□□-700□	730
LEFS32□□-750□	730
LEFS32□□-800□	880
LEFS32□□-850□	880
LEFS32□□-900□	880
LEFS32□□-950□	1030
LEFS32□□-1000□	1030

Dimensions: In-line Motor

LEFS40

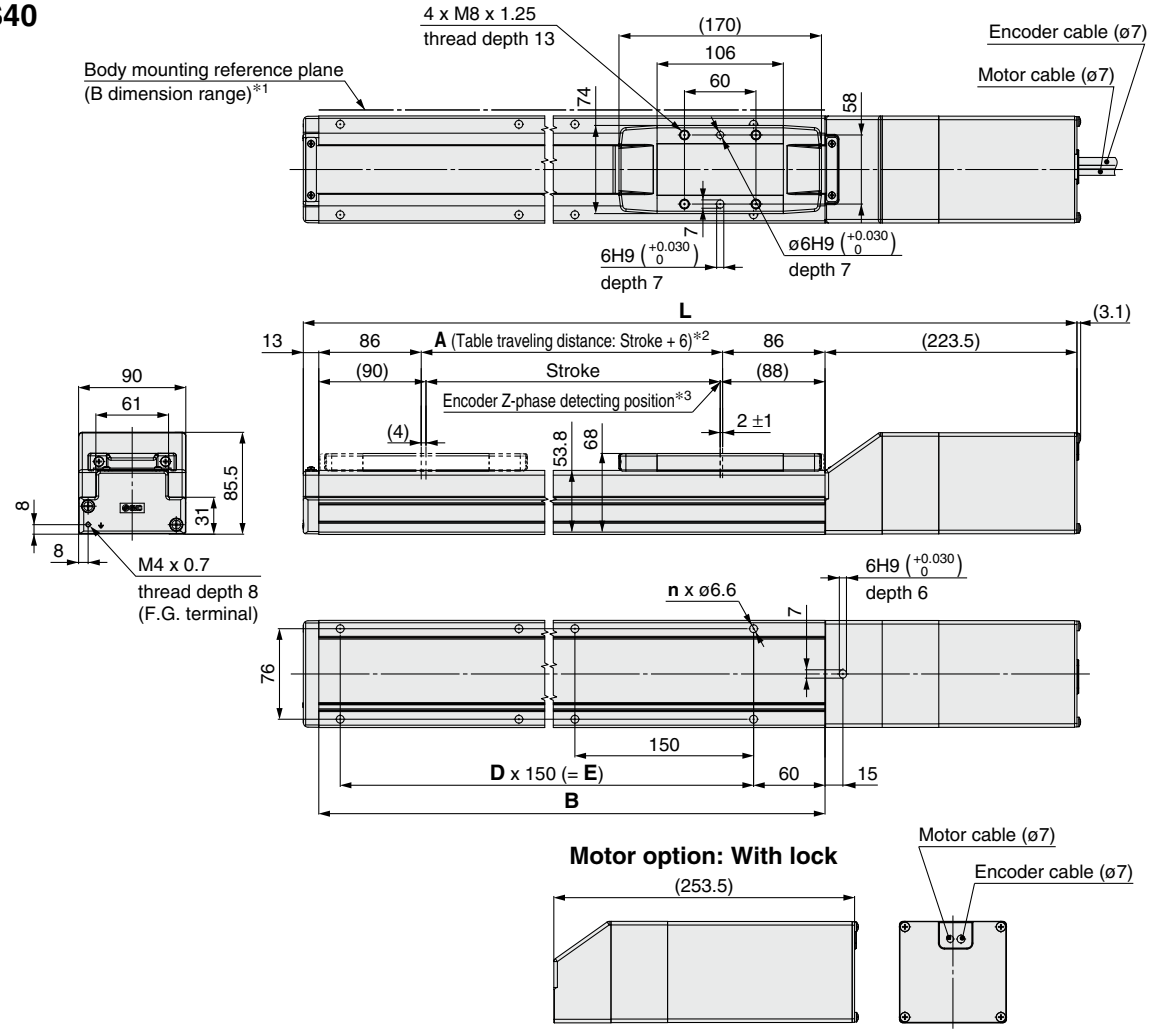

Motor option: With lock

*1 When mounting the actuator using the body mounting reference plane, set the height of the opposite surface or pin to be 3 mm or more because of round chamfering. (Recommended height 5 mm)
In addition, be aware that surfaces other than the body mounting reference plane (B dimension range) may slightly protrude from the body mounting reference plane. Be sure to provide a clearance of 1 mm or more to avoid interference with workpieces, facilities, etc.

*2 This is the distance within which the table can move when it returns to origin.
Make sure workpieces mounted on the table do not interfere with the workpieces and facilities around the table.

*3 The Z-phase first detecting position from the stroke end of the motor side

Dimensions [mm]

Model	L		A	B	n	D	E
	Without lock	With lock					
LEFS40□□-150□	564.5	594.5	156	328	4	—	150
LEFS40□□-200□	614.5	644.5	206	378	6	2	300
LEFS40□□-250□	664.5	694.5	256	428	6	2	300
LEFS40□□-300□	714.5	744.5	306	478	6	2	300
LEFS40□□-350□	764.5	794.5	356	528	8	3	450
LEFS40□□-400□	814.5	844.5	406	578	8	3	450
LEFS40□□-450□	864.5	894.5	456	628	8	3	450
LEFS40□□-500□	914.5	944.5	506	678	10	4	600
LEFS40□□-550□	964.5	994.5	556	728	10	4	600
LEFS40□□-600□	1014.5	1044.5	606	778	10	4	600
LEFS40□□-650□	1064.5	1094.5	656	828	12	5	750
LEFS40□□-700□	1114.5	1144.5	706	878	12	5	750
LEFS40□□-750□	1164.5	1194.5	756	928	12	5	750
LEFS40□□-800□	1214.5	1244.5	806	978	14	6	900
LEFS40□□-850□	1264.5	1294.5	856	1028	14	6	900
LEFS40□□-900□	1314.5	1344.5	906	1078	14	6	900
LEFS40□□-950□	1364.5	1394.5	956	1128	16	7	1050
LEFS40□□-1000□	1414.5	1444.5	1006	1178	16	7	1050
LEFS40□□-1100□	1514.5	1544.5	1106	1278	18	8	1200
LEFS40□□-1200□	1614.5	1644.5	1206	1378	18	8	1200

Dimensions: In-line Motor

LEFS40

Positioning pin hole*1 (Option): Body bottom

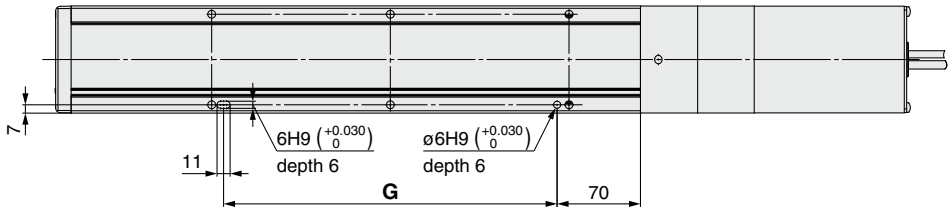

*1 When using the body bottom positioning pin holes, do not simultaneously use the housing B bottom pin hole.

With auto switch (Option)

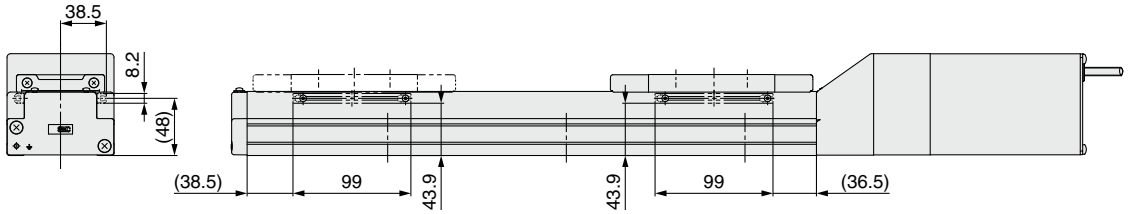

Dimensions [mm]

Model	G
LEFS40□□-150□	130
LEFS40□□-200□	280
LEFS40□□-250□	280
LEFS40□□-300□	280
LEFS40□□-350□	430
LEFS40□□-400□	430
LEFS40□□-450□	430
LEFS40□□-500□	580
LEFS40□□-550□	580
LEFS40□□-600□	580
LEFS40□□-650□	730
LEFS40□□-700□	730
LEFS40□□-750□	730
LEFS40□□-800□	880
LEFS40□□-850□	880
LEFS40□□-900□	880
LEFS40□□-950□	1030
LEFS40□□-1000□	1030
LEFS40□□-1100□	1180
LEFS40□□-1200□	1180

Dimensions: Motor Parallel

LEFS25R

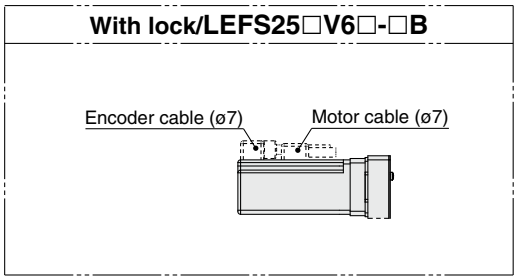

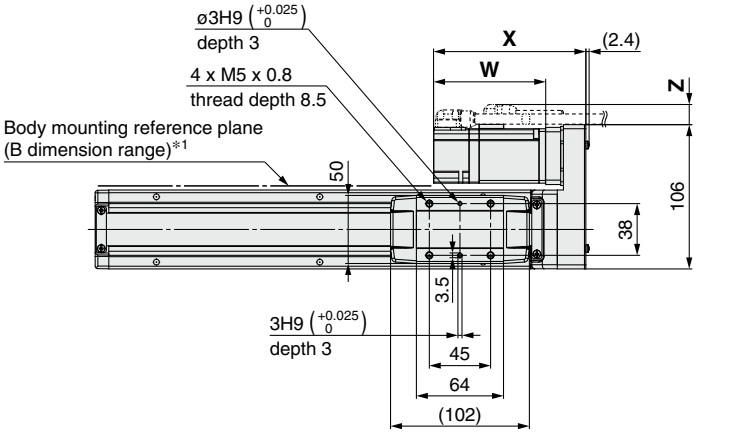

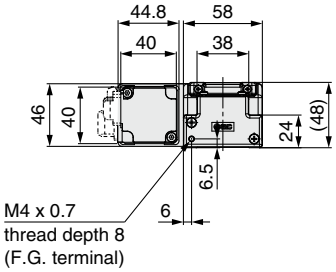

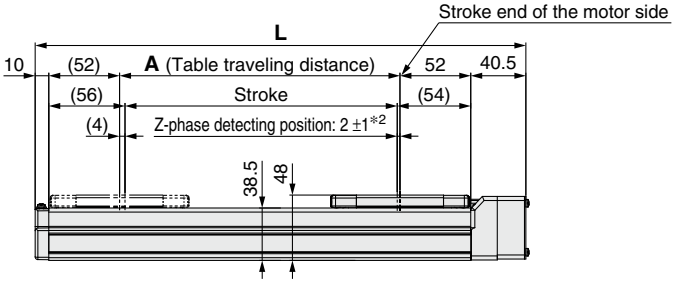

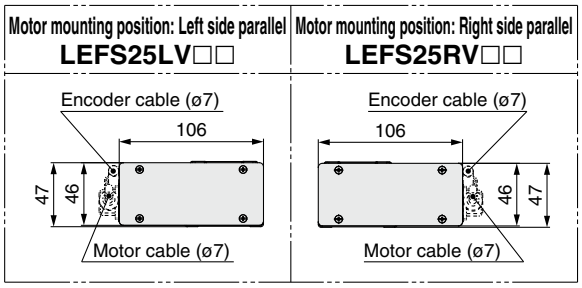

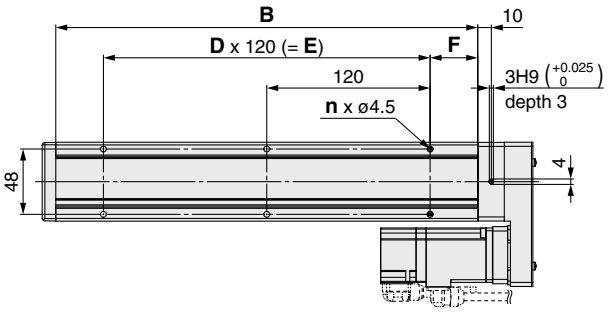

*1 When mounting the actuator using the body mounting reference plane, set the height of the opposite surface or pin to be 3 mm or more. (Recommended height 5 mm)
In addition, be aware that surfaces other than the body mounting reference plane (B dimension range) may slightly protrude from the body mounting reference plane. Be sure to provide a clearance of 1 mm or more to avoid interference with workpieces, facilities, etc.

*2 The Z-phase first detecting position from the stroke end of the motor side Please consult with SMC for adjusting the Z-phase detecting position at the stroke end of the end side.

Motor Dimensions [mm]

Motor type	X		W		Z	
	Without lock	With lock	Without lock	With lock	Without lock	With lock
V6	112	157	82.5	127.5	11	

Dimensions [mm]

Model	L	A	B	n	D	E	F
LEFS25□□□-50□	210.5	56	160	4	—	—	20
LEFS25□□□-100□	260.5	106	210	4	—	—	
LEFS25□□□-150□	310.5	156	260	4	—	—	
LEFS25□□□-200□	360.5	206	310	6	2	240	
LEFS25□□□-250□	410.5	256	360	6	2	240	
LEFS25□□□-300□	460.5	306	410	8	3	360	
LEFS25□□□-350□	510.5	356	460	8	3	360	
LEFS25□□□-400□	560.5	406	510	8	3	360	
LEFS25□□□-450□	610.5	456	560	10	4	480	35
LEFS25□□□-500□	660.5	506	610	10	4	480	
LEFS25□□□-550□	710.5	556	660	12	5	600	
LEFS25□□□-600□	760.5	606	710	12	5	600	
LEFS25□□□-650□	810.5	656	760	12	5	600	
LEFS25□□□-700□	860.5	706	810	14	6	720	
LEFS25□□□-750□	910.5	756	860	14	6	720	
LEFS25□□□-800□	960.5	806	910	16	7	840	

Dimensions: Motor Parallel

LEFS25R

Positioning pin hole*1 (Option): Body bottom

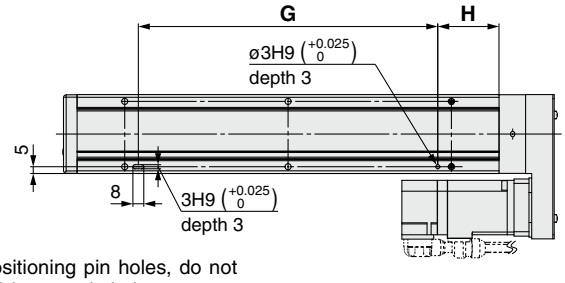

*1 When using the body bottom positioning pin holes, do not simultaneously use the housing B bottom pin hole.

With auto switch (Option)

LEFS25R

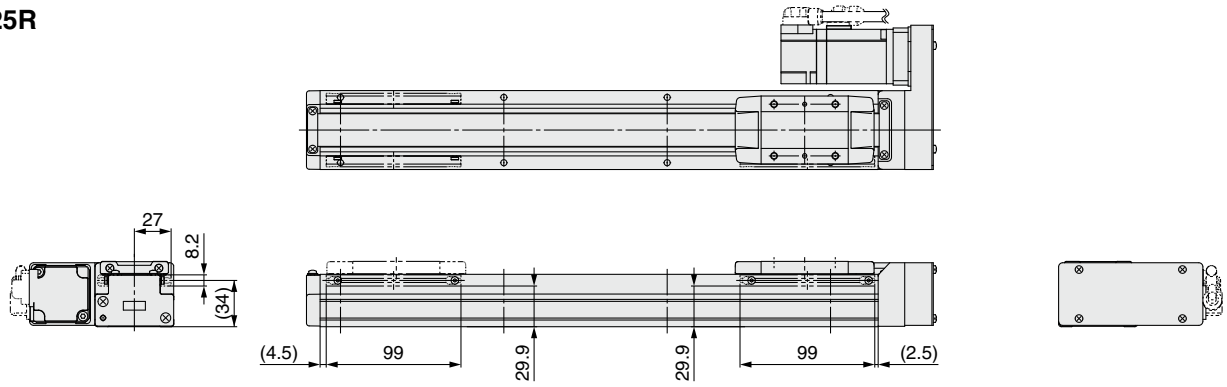

LEFS25L

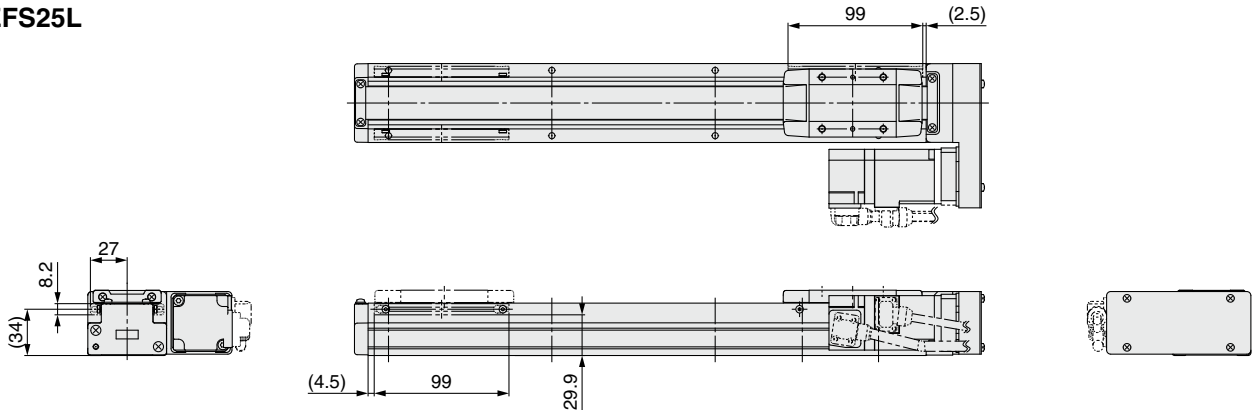

Dimensions [mm]

Model	G	H
LEFS25□□□-50□	100	30
LEFS25□□□-100□	100	45
LEFS25□□□-150□	100	45
LEFS25□□□-200□	220	45
LEFS25□□□-250□	220	45
LEFS25□□□-300□	340	45
LEFS25□□□-350□	340	45
LEFS25□□□-400□	340	45
LEFS25□□□-450□	460	45
LEFS25□□□-500□	460	45
LEFS25□□□-550□	580	45
LEFS25□□□-600□	580	45
LEFS25□□□-650□	580	45
LEFS25□□□-700□	700	45
LEFS25□□□-750□	700	45
LEFS25□□□-800□	820	45

* For strokes of 99 mm or less, only 1 auto switch mounting bracket can be installed on the motor side.

Dimensions: Motor Parallel

LEFS32R

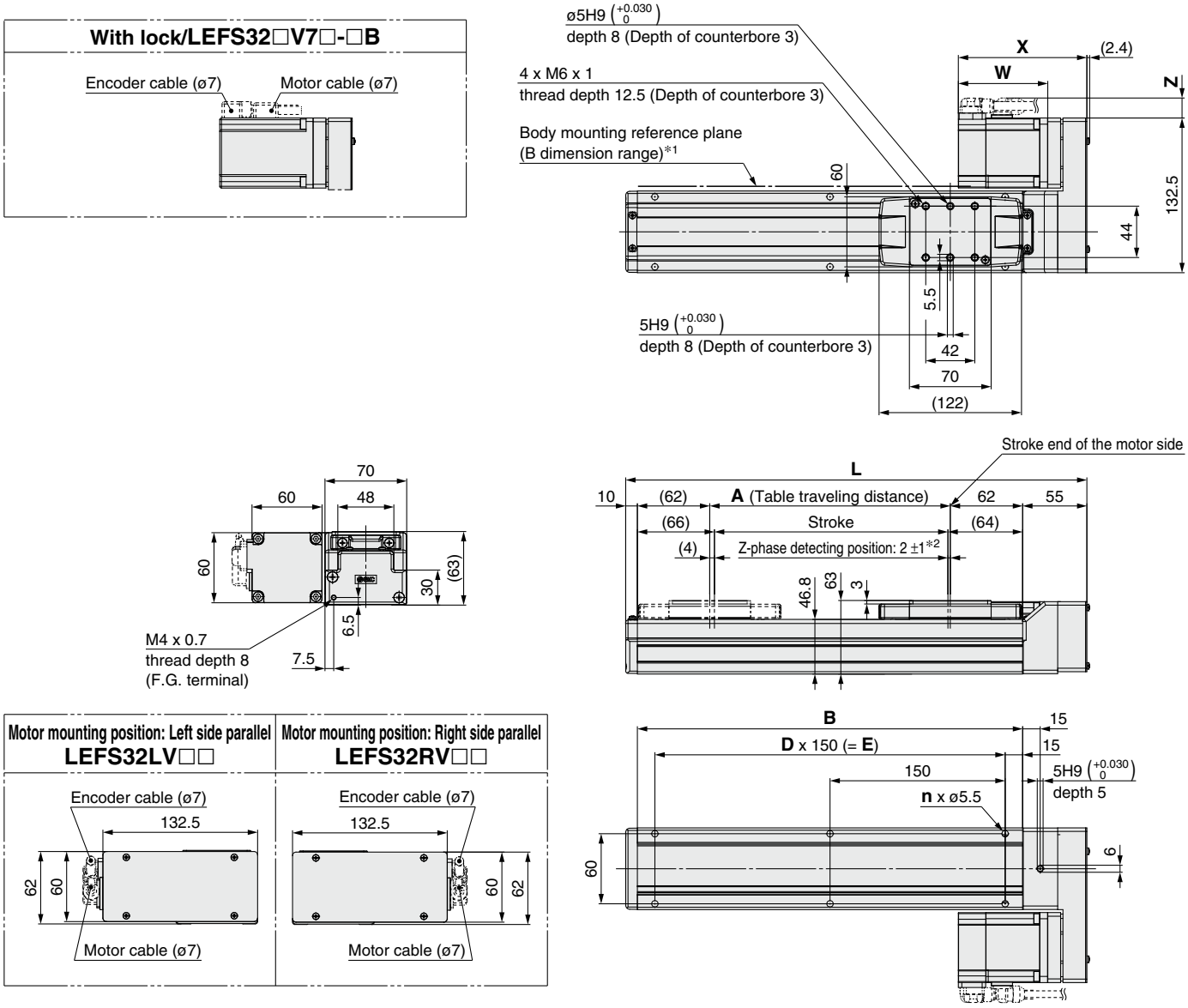

*1 When mounting the actuator using the body mounting reference plane, set the height of the opposite surface or pin to be 3 mm or more. (Recommended height 5 mm)
In addition, be aware that surfaces other than the body mounting reference plane (B dimension range) may slightly protrude from the body mounting reference plane. Be sure to provide a clearance of 1 mm or more to avoid interference with workpieces, facilities, etc.

*2 The Z-phase first detecting position from the stroke end of the motor side
Please consult with SMC for adjusting the Z-phase detecting position at the stroke end of the end side.

Motor Dimensions

[mm]

Motor type	X		W		Z	
	Without lock	With lock	Without lock	With lock	Without lock	With lock
V7	113.5	153.5	80	120	14	14

Dimensions

[mm]

Model	L	A	B	n	D	E
LEFS32□□□-50□	245	56	180	4	—	—
LEFS32□□□-100□	295	106	230	4	—	—
LEFS32□□□-150□	345	156	280	4	—	—
LEFS32□□□-200□	395	206	330	6	2	300
LEFS32□□□-250□	445	256	380	6	2	300
LEFS32□□□-300□	495	306	430	6	2	300
LEFS32□□□-350□	545	356	480	8	3	450
LEFS32□□□-400□	595	406	530	8	3	450
LEFS32□□□-450□	645	456	580	8	3	450
LEFS32□□□-500□	695	506	630	10	4	600

Dimensions

[mm]

Model	L	A	B	n	D	E
LEFS32□□□-550□	745	556	680	10	4	600
LEFS32□□□-600□	795	606	730	10	4	600
LEFS32□□□-650□	845	656	780	12	5	750
LEFS32□□□-700□	895	706	830	12	5	750
LEFS32□□□-750□	945	756	880	12	5	750
LEFS32□□□-800□	995	806	930	14	6	900
LEFS32□□□-850□	1045	856	980	14	6	900
LEFS32□□□-900□	1095	906	1030	14	6	900
LEFS32□□□-950□	1145	956	1080	16	7	1050
LEFS32□□□-1000□	1195	1006	1130	16	7	1050

Dimensions: Motor Parallel

LEFS32R

Positioning pin hole*1 (Option): Body bottom

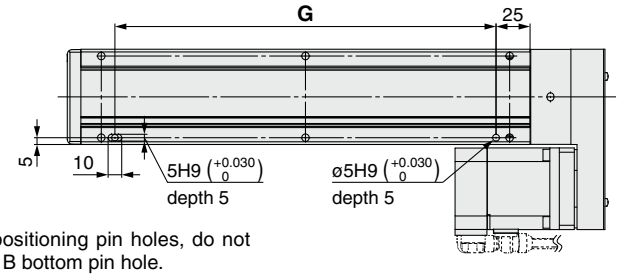

*1 When using the body bottom positioning pin holes, do not simultaneously use the housing B bottom pin hole.

With auto switch (Option)

LEFS32R

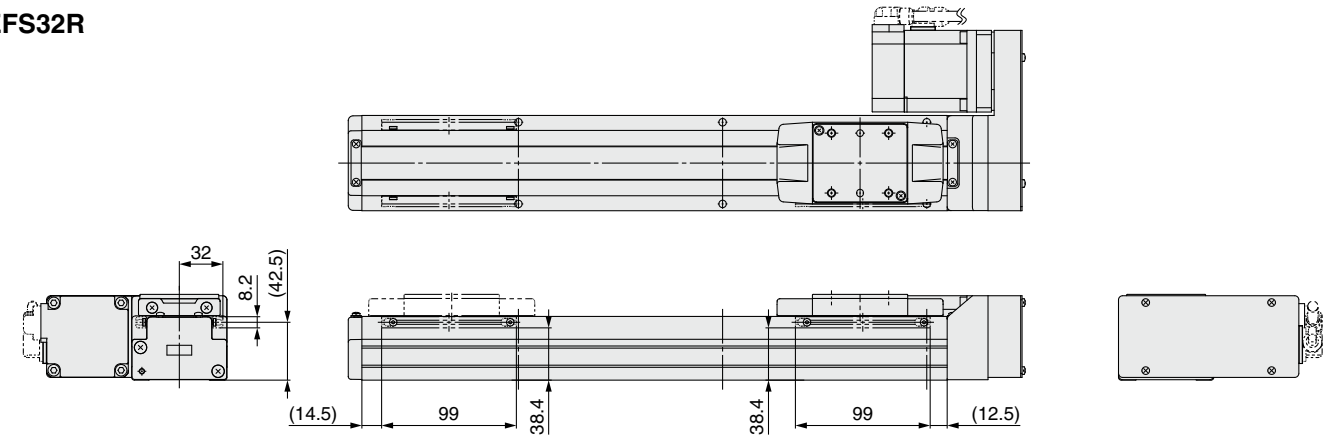

LEFS32L

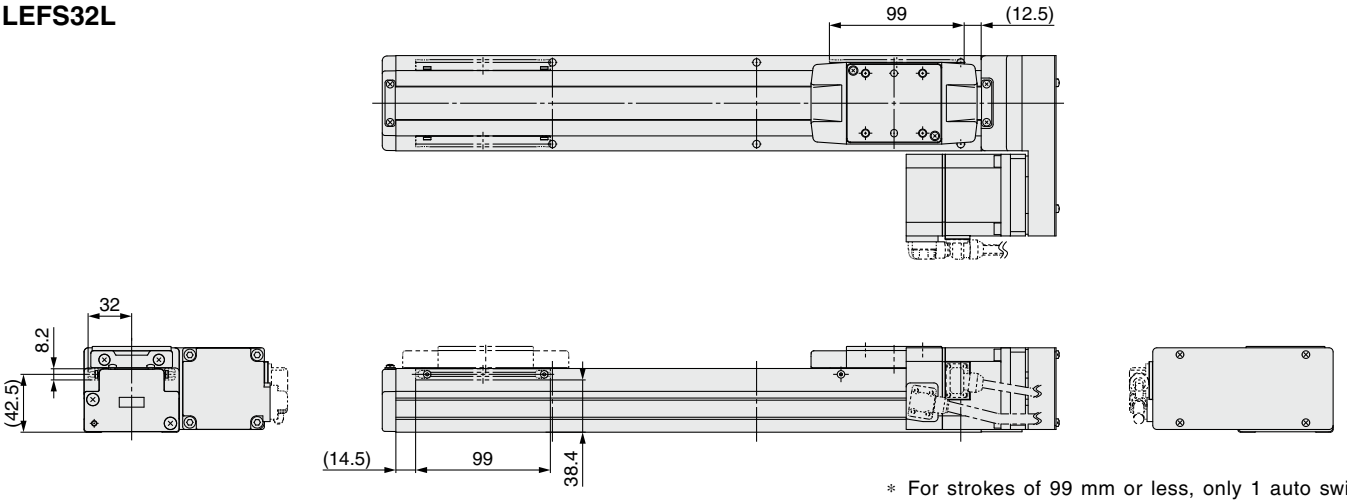

* For strokes of 99 mm or less, only 1 auto switch mounting bracket can be installed on the motor side.

Dimensions [mm]

Model	G
LEFS32□□□-50□	130
LEFS32□□□-100□	130
LEFS32□□□-150□	130
LEFS32□□□-200□	280
LEFS32□□□-250□	280
LEFS32□□□-300□	280
LEFS32□□□-350□	430
LEFS32□□□-400□	430
LEFS32□□□-450□	430
LEFS32□□□-500□	580

Dimensions [mm]

Model	G
LEFS32□□□-550□	580
LEFS32□□□-600□	580
LEFS32□□□-650□	730
LEFS32□□□-700□	730
LEFS32□□□-750□	730
LEFS32□□□-800□	880
LEFS32□□□-850□	880
LEFS32□□□-900□	880
LEFS32□□□-950□	1030
LEFS32□□□-1000□	1030

Dimensions: Motor Parallel

LEFS40R

With lock/LEFS40□V8□-□B

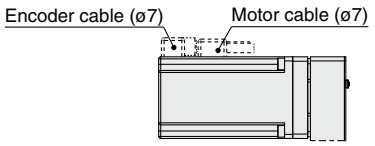

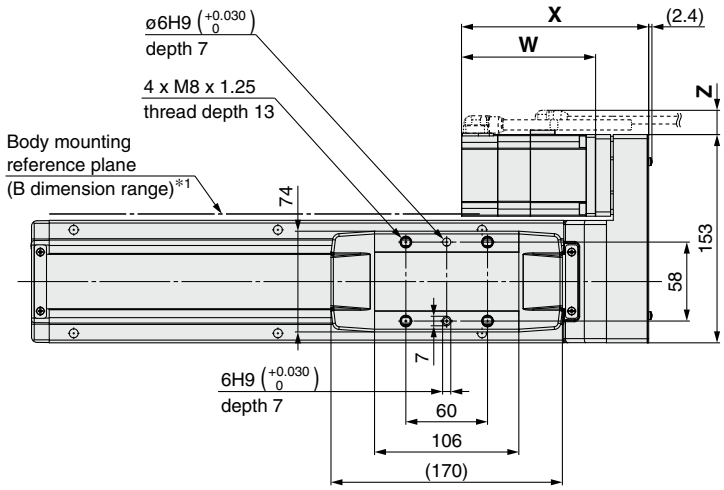

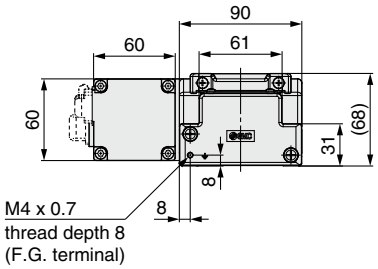

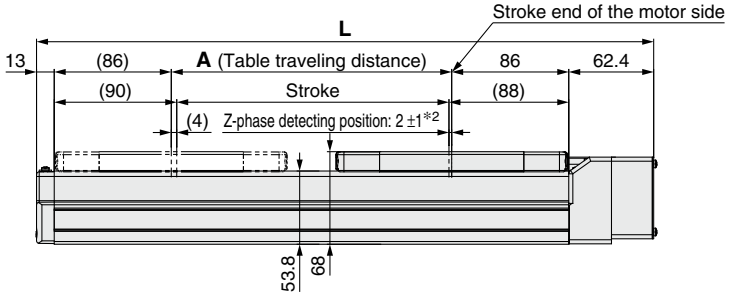

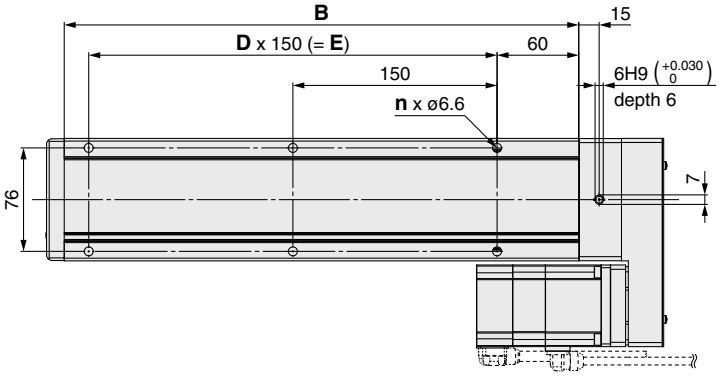

∗1 When mounting the actuator using the body mounting reference plane, set the height of the opposite surface or pin to be 3 mm or more. (Recommended height 5 mm)
In addition, be aware that surfaces other than the body mounting reference plane (B dimension range) may slightly protrude from the body mounting reference plane. Be sure to provide a clearance of 1 mm or more to avoid interference with workpieces, facilities, etc.

∗2 The Z-phase first detecting position from the stroke end of the motor side
Please consult with SMC for adjusting the Z-phase detecting position at the stroke end of the end side.

Motor Dimensions [mm]

Motor type	X		W		Z	
	Without lock	With lock	Without lock	With lock	Without lock	With lock
V8	137.5	177.5	98.5	138.5	14	14

Dimensions [mm]

Model	L	A	B	n	D	E
LEFS40□□□-150□	403.4	156	328	4	—	150
LEFS40□□□-200□	453.4	206	378	6	2	300
LEFS40□□□-250□	503.4	256	428	6	2	300
LEFS40□□□-300□	553.4	306	478	6	2	300
LEFS40□□□-350□	603.4	356	528	8	3	450
LEFS40□□□-400□	653.4	406	578	8	3	450
LEFS40□□□-450□	703.4	456	628	8	3	450
LEFS40□□□-500□	753.4	506	678	10	4	600
LEFS40□□□-550□	803.4	556	728	10	4	600
LEFS40□□□-600□	853.4	606	778	10	4	600
LEFS40□□□-650□	903.4	656	828	12	5	750
LEFS40□□□-700□	953.4	706	878	12	5	750
LEFS40□□□-750□	1003.4	756	928	12	5	750
LEFS40□□□-800□	1053.4	806	978	14	6	900
LEFS40□□□-850□	1103.4	856	1028	14	6	900
LEFS40□□□-900□	1153.4	906	1078	14	6	900
LEFS40□□□-950□	1203.4	956	1128	16	7	1050
LEFS40□□□-1000□	1253.4	1006	1178	16	7	1050
LEFS40□□□-1100□	1353.4	1106	1278	18	8	1200
LEFS40□□□-1200□	1453.4	1206	1378	18	8	1200

Motor mounting position: Left side parallel
LEFS40LV□□

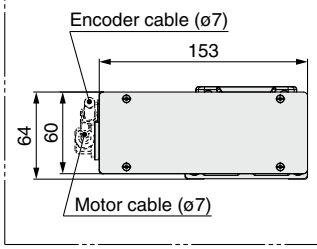

Motor mounting position: Right side parallel
LEFS40RV□□

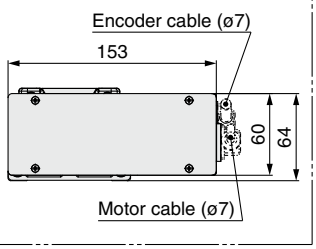

Dimensions: Motor Parallel

LEFS40R

Positioning pin hole*1 (Option): Body bottom

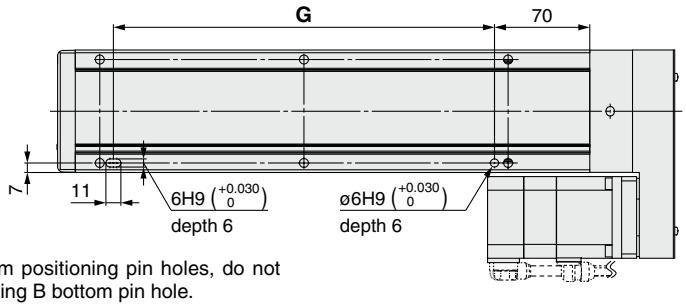

*1 When using the body bottom positioning pin holes, do not simultaneously use the housing B bottom pin hole.

With auto switch (Option)

LEFS40R

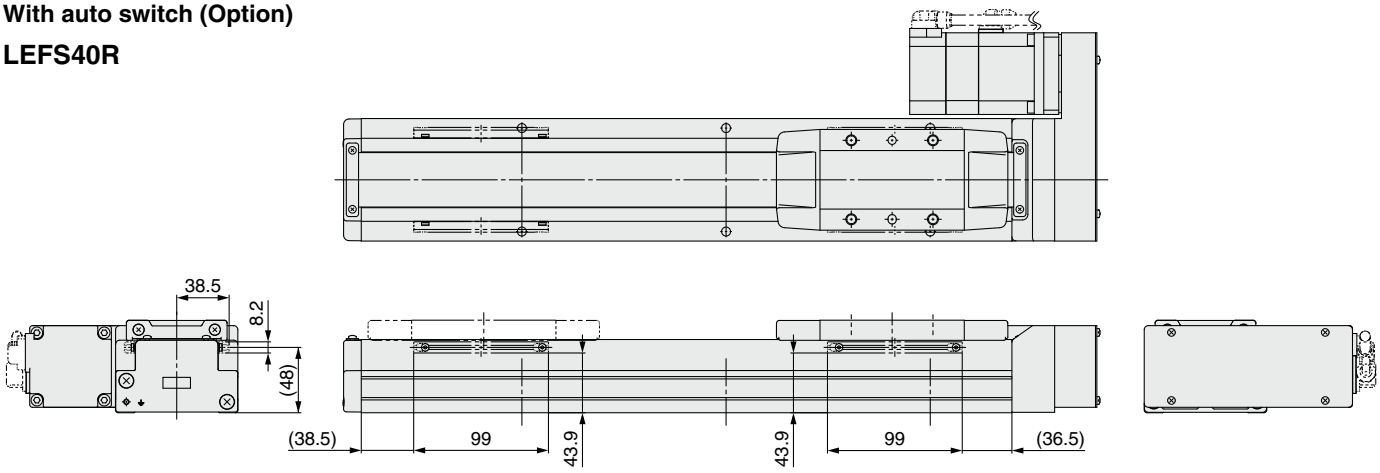

LEFS40L

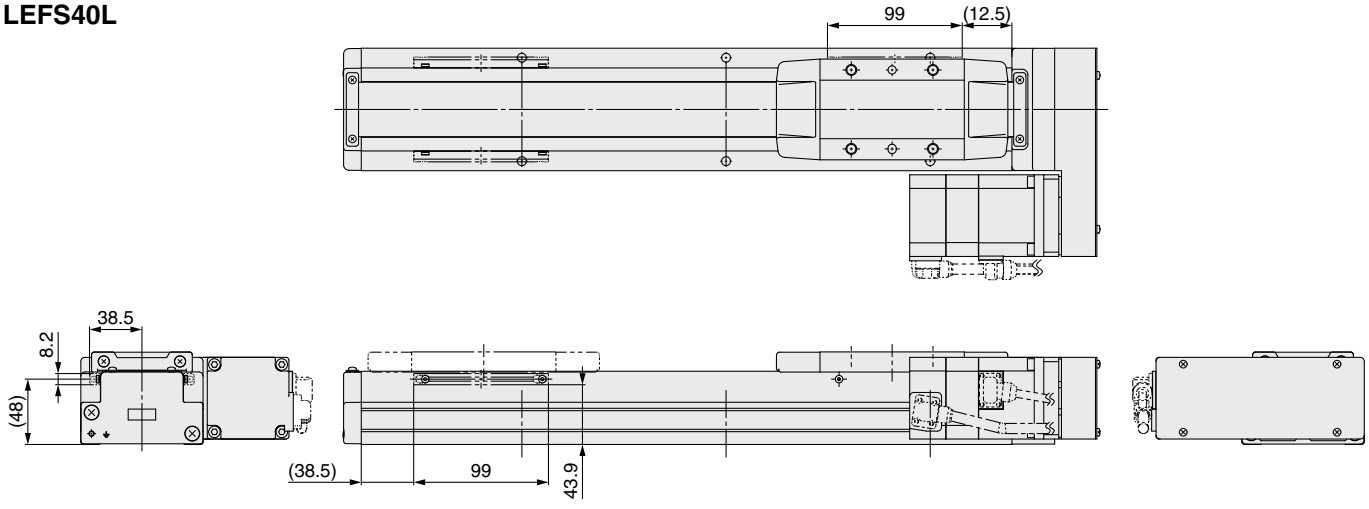

Dimensions [mm]

Model	G
LEFS40□□□-150□	130
LEFS40□□□-200□	280
LEFS40□□□-250□	280
LEFS40□□□-300□	280
LEFS40□□□-350□	430
LEFS40□□□-400□	430
LEFS40□□□-450□	430
LEFS40□□□-500□	580
LEFS40□□□-550□	580
LEFS40□□□-600□	580

Dimensions [mm]

Model	G
LEFS40□□□-650□	730
LEFS40□□□-700□	730
LEFS40□□□-750□	730
LEFS40□□□-800□	880
LEFS40□□□-850□	880
LEFS40□□□-900□	880
LEFS40□□□-950□	1030
LEFS40□□□-1000□	1030
LEFS40□□□-1100□	1180
LEFS40□□□-1200□	1180

Step Motor (Servo/24 VDC) | Servo Motor (24 VDC) | AC Servo Motor

Support Guide/For Ball Screw Drive

LEFG Series LEFG16, 25, 32, 40

RoHS

Clean Room Specification ▶ p. 651

The support guide was designed to support workpieces with significant overhang.

- As the dimensions are the same as the LEF series body, installation is simple and contributes to a reduction in installation and assembly labor.
- The standard-equipped seal bands prevent grease from splashing and external foreign matter from entering.

Application example

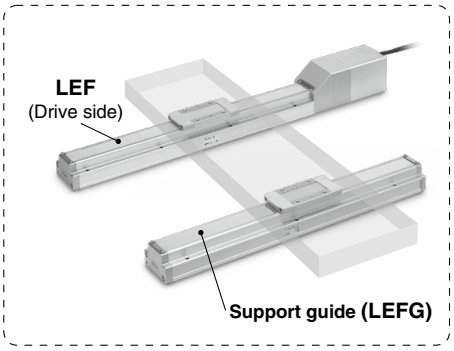

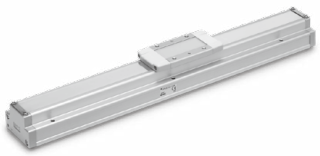

How to Order

LEF G 32 – S – 200 N

❶ ❷ ❸ ❹

Support guide

❶ Size

16
25
32
40

❷ Type of mounting pitch

Symbol	LEFG16	LEFG25	LEFG32	LEFG40	Note
S	●	●	●	●	Ball screw drive Step motor/Servo motor (24 VDC)/ AC servo motor

❸ Stroke [mm]

50	50
to	to
1200	1200

❹ Grease application (Seal band part)

Nil	With
N	Without (Roller specification)

Applicable Stroke Table

Ball Screw Drive/S Step Motor (Servo/24 VDC) | Servo Motor (24 VDC) | AC Servo Motor

Model \ Stroke [mm]	50	100	150	200	250	300	350	400	450	500	550	600	650	700	750	800	850	900	950	1000	1100	1200
LEFG16-S	●	●	●	●	●	●	●	●	●	●	—	—	—	—	—	—	—	—	—	—	—	—
LEFG25-S	●	●	●	●	●	●	●	●	●	●	●	●	●	●	●	●	—	—	—	—	—	—
LEFG32-S	●	●	●	●	●	●	●	●	●	●	●	●	●	●	●	●	●	●	●	●	—	—
LEFG40-S	—	—	●	●	●	●	●	●	●	●	●	●	●	●	●	●	●	●	●	●	●	●

Weight

Ball Screw Drive/S Step Motor (Servo/24 VDC) | Servo Motor (24 VDC) | AC Servo Motor

Model \ Stroke [mm]	50	100	150	200	250	300	350	400	450	500	550	600	650	700	750	800	850	900	950	1000	1100	1200
LEFG16-S	0.25	0.31	0.37	0.43	0.49	0.55	0.61	0.67	0.73	0.79	—	—	—	—	—	—	—	—	—	—	—	—
LEFG25-S	0.56	0.67	0.78	0.89	1.00	1.11	1.22	1.33	1.44	1.55	1.66	1.77	1.88	1.99	2.10	2.21	—	—	—	—	—	—
LEFG32-S	0.92	1.08	1.23	1.4	1.56	1.72	1.88	2.04	2.20	2.36	2.52	2.68	2.84	3.00	3.16	3.32	3.48	3.64	3.80	3.96	—	—
LEFG40-S	—	—	2.07	2.29	2.51	2.72	2.94	3.15	3.37	3.58	3.80	4.01	4.23	4.44	4.66	4.87	5.09	5.30	5.52	5.73	6.16	6.59

Dimensions: Ball Screw Drive

LEFG16-S

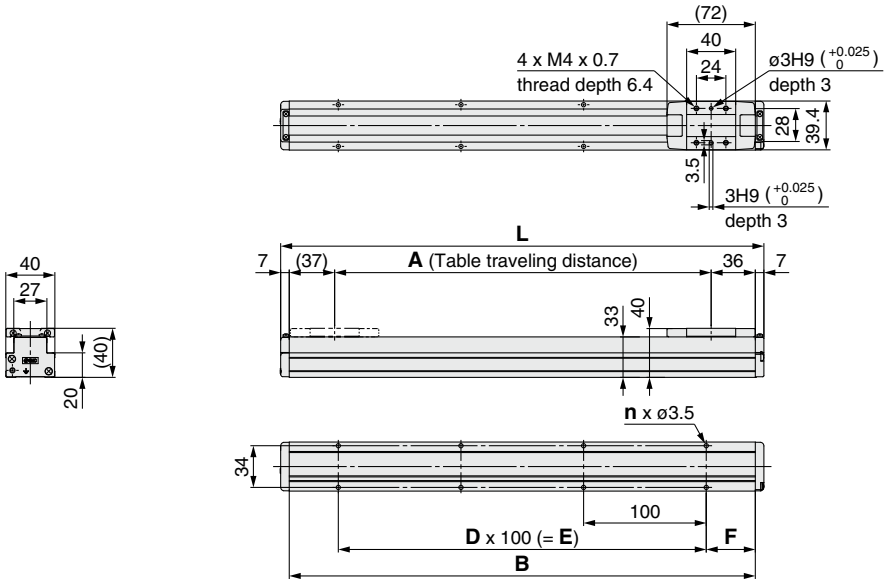

Dimensions [mm]

Model	L	A	B	n	D	E	F
LEFG16-S-50	144	57	130	4	—	—	15
LEFG16-S-100	194	107	180				40
LEFG16-S-150	244	157	230				
LEFG16-S-200	294	207	280	6	2	200	
LEFG16-S-250	344	257	330				

Dimensions [mm]

Model	L	A	B	n	D	E	F
LEFG16-S-300	394	307	380	8	3	300	40
LEFG16-S-350	444	357	430				
LEFG16-S-400	494	407	480	10	4	400	
LEFG16-S-450	544	457	530				
LEFG16-S-500	594	507	580	12	5	500	

LEFG25-S

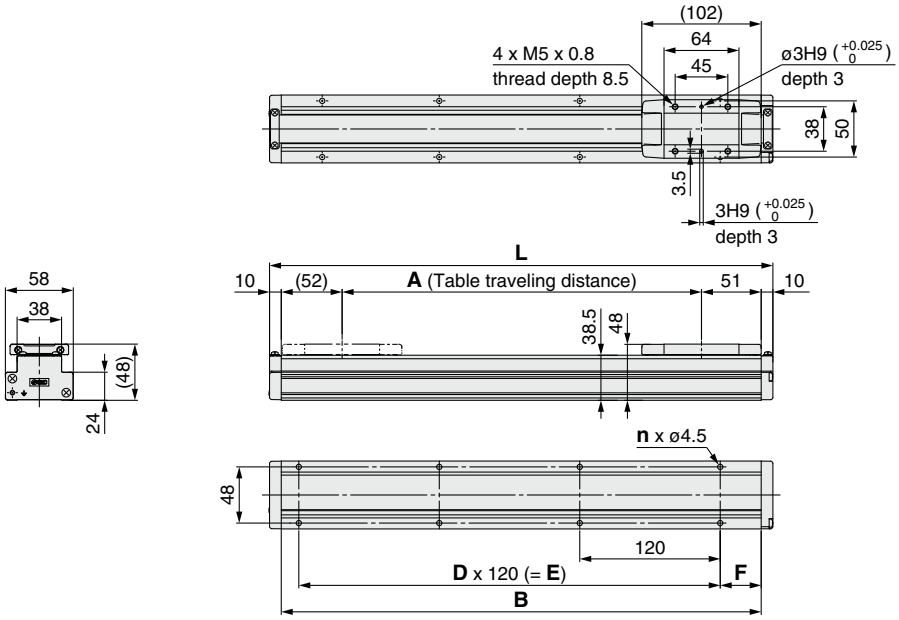

Dimensions [mm]

Model	L	A	B	n	D	E	F
LEFG25-S-50	180	57	160	4	—	—	20
LEFG25-S-100	230	107	210				35
LEFG25-S-150	280	157	260				
LEFG25-S-200	330	207	310	6	2	240	
LEFG25-S-250	380	257	360				
LEFG25-S-300	430	307	410	8	3	360	
LEFG25-S-350	480	357	460				
LEFG25-S-400	530	407	510				

Dimensions [mm]

Model	L	A	B	n	D	E	F
LEFG25-S-450	580	457	560	10	4	480	35
LEFG25-S-500	630	507	610				
LEFG25-S-550	680	557	660	12	5	600	
LEFG25-S-600	730	607	710				
LEFG25-S-650	780	657	760				
LEFG25-S-700	830	707	810	14	6	720	
LEFG25-S-750	880	757	860				
LEFG25-S-800	930	807	910	16	7	840	

Dimensions: Ball Screw Drive

LEFG32-S

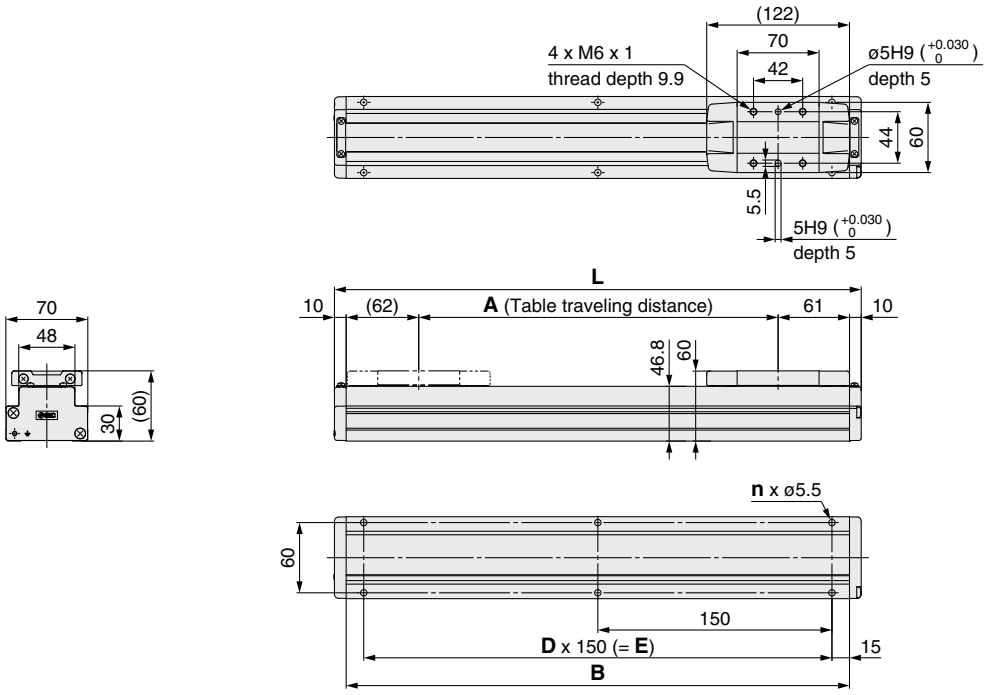

Dimensions [mm]

Model	L	A	B	n	D	E
LEFG32-S-50	200	57	180	4	—	—
LEFG32-S-100	250	107	230			
LEFG32-S-150	300	157	280			
LEFG32-S-200	350	207	330	6	2	300
LEFG32-S-250	400	257	380			
LEFG32-S-300	450	307	430			
LEFG32-S-350	500	357	480	8	3	450
LEFG32-S-400	550	407	530			
LEFG32-S-450	600	457	580			
LEFG32-S-500	650	507	630	10	4	600
LEFG32-S-550	700	557	680			
LEFG32-S-600	750	607	730			

Dimensions [mm]

Model	L	A	B	n	D	E
LEFG32-S-650	800	657	780	12	5	750
LEFG32-S-700	850	707	830			
LEFG32-S-750	900	757	880			
LEFG32-S-800	950	807	930	14	6	900
LEFG32-S-850	1000	857	980			
LEFG32-S-900	1050	907	1030			
LEFG32-S-950	1100	957	1080	16	7	1050
LEFG32-S-1000	1150	1007	1130			

∗ When a support guide is used for the LEFS32R□□□ (Motor parallel type), order a table spacer separately since the table height differs.
Table spacer part number: LEF-TS32

Table spacer
LEF-TS32

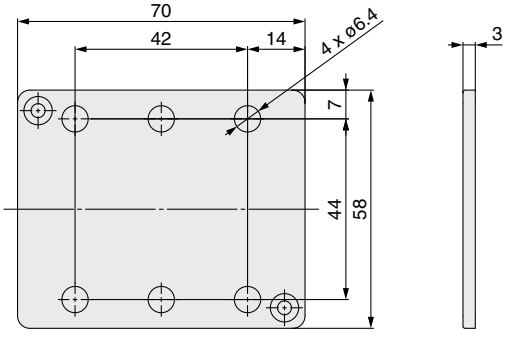

Dimensions: Ball Screw Drive

LEFG40-S

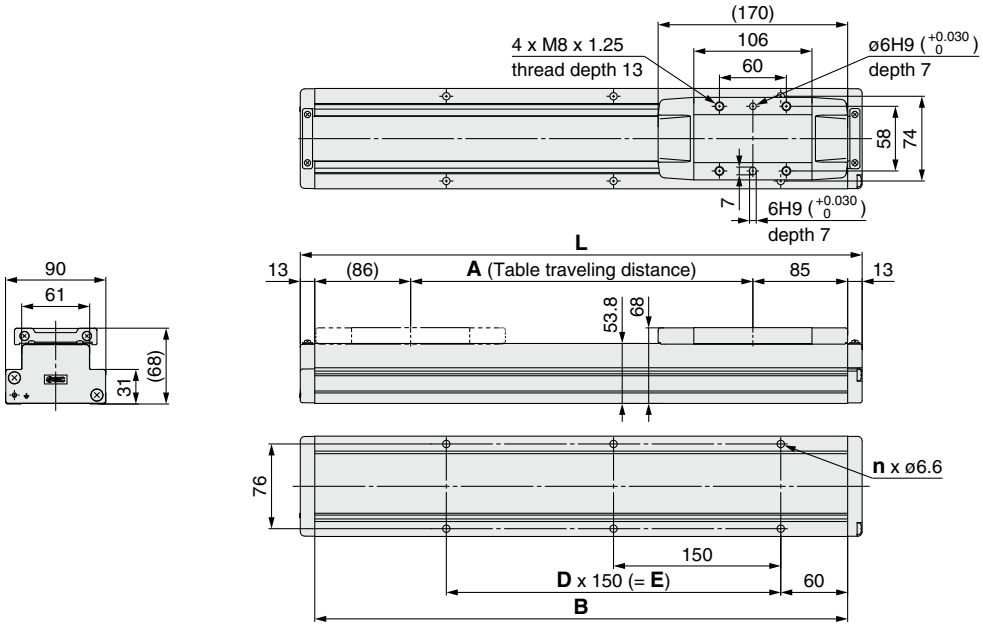

Dimensions [mm]

Model	L	A	B	n	D	E
LEFG40-S-150	354	157	328	4	—	150
LEFG40-S-200	404	207	378	6	2	300
LEFG40-S-250	454	257	428			
LEFG40-S-300	504	307	478			
LEFG40-S-350	554	357	528	8	3	450
LEFG40-S-400	604	407	578			
LEFG40-S-450	654	457	628			
LEFG40-S-500	704	507	678	10	4	600
LEFG40-S-550	754	557	728			
LEFG40-S-600	804	607	778			

Dimensions [mm]

Model	L	A	B	n	D	E
LEFG40-S-650	854	657	828	12	5	750
LEFG40-S-700	904	707	878			
LEFG40-S-750	954	757	928			
LEFG40-S-800	1004	807	978	14	6	900
LEFG40-S-850	1054	857	1028			
LEFG40-S-900	1104	907	1078			
LEFG40-S-950	1154	957	1128	16	7	1050
LEFG40-S-1000	1204	1007	1178			
LEFG40-S-1100	1304	1107	1278	18	8	1200
LEFG40-S-1200	1404	1207	1378			

Step Motor (Servo/24 VDC) Servo Motor (24 VDC)

Electric Actuator/Slider Type Belt Drive

LEFB Series LEFB16, 25, 32

Click here for details. Click here for details.

RoHS

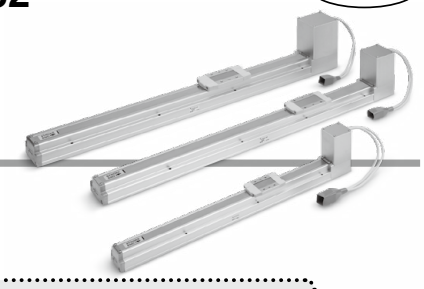

The belt drive actuator cannot be used for vertical applications.

How to Order

LEFB 16 □ T – 500 □ C N K – R1

❶ ❷ ❸ ❹ ❺ ❻ ❼ ❽ ❾

JXC□ Series

CD17T

LEC□ Series

AN 1 □

❿ ⓫ ⓬

For details on controllers, refer to page 114.

❶ Size

16
25
32

❷ Motor type

Symbol	Type	Applicable size			Compatible controllers/drivers
		LEFB16	LEFB25	LEFB32	
Nil	Step motor (Servo/24 VDC)	●	●	●	JXCE1 JXC91 JXCP1 JXCD1 LECP1 JXCL1 LECPA JXCM1 JXC51 JXC61
A	Servo motor (24 VDC)	●	●	—	LECA6

❸ Equivalent lead [mm]

T	48

❹ Stroke*1 [mm]

Stroke	Note	
	Size	Applicable stroke
300 to 1000	16	300, 500, 600, 700, 800, 900, 1000
300 to 2000	25	300, 500, 600, 700, 800, 900, 1000, 1200, 1500, 1800, 2000
300 to 2000	32	300, 500, 600, 700, 800, 900, 1000, 1200, 1500, 1800, 2000

❺ Motor option

Nil	Without option
B	With lock

❻ Auto switch compatibility*2 *3 *4 *5

Nil	None
C	With (Includes 1 mounting bracket)

❼ Grease application (Seal band part)

Nil	With
N	Without (Roller specification)

❽ Positioning pin hole

Nil	Housing B bottom*6	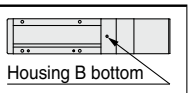
K	Body bottom 2 locations	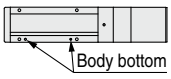

❾ Actuator cable type/length*8

Standard cable [m]

Nil	None
S1	1.5*10
S3	3*10
S5	5*10

Robotic cable [m]

R1	1.5	RA	10*7
R3	3	RB	15*7
R5	5	RC	20*7
R8	8*7		

Support Guide/*LEFG* Series

The support guide was designed to support workpieces with significant overhang.

p. 156

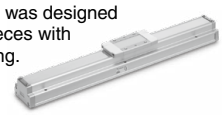

For auto switches, refer to pages 161 to 164.

SMC

JXC□ Series (For details, refer to page 115.)



⑩ Controller

Nil	Without controller
C□1□□	With controller

C D 1 7 T

Interface (Communication protocol/Input/Output)

E	EtherCAT®	**L**	IO-Link
9	EtherNet/IP™	**M**	CC-Link Ver1.10
P	PROFINET	**5**	Parallel input (NPN)
D	DeviceNet™	**6**	Parallel input (PNP)

For single axis

Mounting

7	Screw mounting
8∗14	DIN rail

Communication plug connector I/O cable∗15

Symbol	Type	Applicable interface
Nil	Without accessory	—
S	Straight type communication plug connector	DeviceNet™ CC-Link Ver1.10
T	T-branch type communication plug connector	
1	I/O cable (1.5 m)	Parallel input (NPN) Parallel input (PNP)
3	I/O cable (3 m)	
5	I/O cable (5 m)	

LEC□ Series (For details, refer to page 115.)



AN 1 □

⑩ ⑪ ⑫

⑩ Controller/Driver type∗9

Nil	Without controller/driver	
6N	**LECA6** (Step data input type)	NPN
6P		PNP
1N	**LECP1**∗10 (Programless type)	NPN
1P		PNP
AN	**LECPA**∗10 ∗11 (Pulse input type)	NPN
AP		PNP

⑪ I/O cable length∗12

Nil	Without cable (Without communication plug connector)
1	1.5 m
3	3 m∗13
5	5 m∗13

⑫ Controller/Driver mounting

Nil	Screw mounting
D	DIN rail∗14

∗1 Please consult with SMC for non-standard strokes as they are produced as special orders.
∗2 Excluding the LEF16
∗3 If 2 or more are required, please order them separately. (Part no.: LEF-D-2-1 For details, refer to page 161.)
∗4 Order auto switches separately. (For details, refer to pages 162 to 164.)
∗5 When "Nil" is selected, the product will not come with a built-in magnet for an auto switch, and so a mounting bracket cannot be secured. Be sure to select an appropriate model initially as the product cannot be changed to have auto switch compatibility after purchase.
∗6 Refer to the body mounting example on page 166 for the mounting method.
∗7 Produced upon receipt of order (Robotic cable only)
∗8 The standard cable should only be used on fixed parts.
For use on moving parts, select the robotic cable.
Refer to pages 758 and 759 if only the actuator cable is required.
∗9 For details on controllers/drivers and compatible motors, refer to the compatible controllers/drivers on the next page.
∗10 Only available for the motor type "Step motor"
∗11 When pulse signals are open collector, order the current limiting resistor (LEC-PA-R-□) on page 736 separately.
∗12 When "Without controllers/drivers" is selected for controller/driver types, I/O cable cannot be selected. Refer to page 713 (For LECA6), page 724 (For LECP1), or page 736 (For LECPA) if I/O cable is required.
∗13 When "Pulse input type" is selected for controller/driver types, pulse input usable only with differential. Only 1.5 m cables usable with open collector
∗14 The DIN rail is not included. It must be ordered separately.
∗15 Select "Nil" for anything other than DeviceNet™, CC-Link, or parallel input.
Select "Nil," "S," or "T" for DeviceNet™ or CC-Link.
Select "Nil," "1," "3," or "5" for parallel input.

⚠Caution

[CE-compliant products]

① EMC compliance was tested by combining the electric actuator LEF series and the controller LEC/JXC series.
The EMC depends on the configuration of the customer's control panel and the relationship with other electrical equipment and wiring. Therefore, compliance with the EMC directive cannot be certified for SMC components incorporated into the customer's equipment under actual operating conditions. As a result, it is necessary for the customer to verify compliance with the EMC directive for the machinery and equipment as a whole.

② For the servo motor (24 VDC) specification, EMC compliance was tested by installing a noise filter set (LEC-NFA). Refer to page 713 for the noise filter set. Refer to the LECA series Operation Manual for installation.

[UL-compliant products (For the LEC series)]

When compliance with UL is required, the electric actuator and controller/driver should be used with a UL1310 Class 2 power supply.

The actuator and controller/driver are sold as a package.

Confirm that the combination of the controller/driver and actuator is correct.

<Check the following before use.>

① Check the actuator label for the model number. This number should match that of the controller/driver.

② Check that the Parallel I/O configuration matches (NPN or PNP).

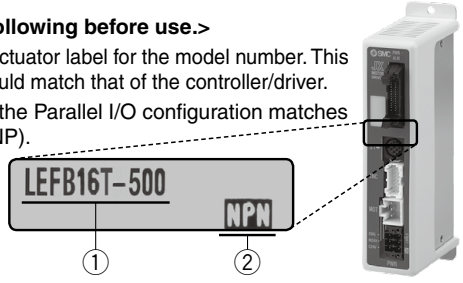

∗ Refer to the Operation Manual for using the products. Please download it via our website: https://www.smcworld.com

Compatible Controllers/Drivers

Type	EtherCAT® direct input type 	EtherNet/IP™ direct input type 	PROFINET direct input type 	DeviceNet™ direct input type 	IO-Link direct input type 	CC-Link direct input type 
Series	**JXCE1**	**JXC91**	**JXCP1**	**JXCD1**	**JXCL1**	**JXCM1**
Features	EtherCAT® direct input	EtherNet/IP™ direct input	PROFINET direct input	DeviceNet™ direct input	IO-Link direct input	CC-Link direct input
Compatible motor	Step motor (Servo/24 VDC)					
Max. number of step data	64 points					
Power supply voltage	24 VDC					
Reference page	741					

Type	Step data input type 	Step data input type 	Programless type 	Pulse input type 
Series	**JXC51 JXC61**	**LECA6**	**LECP1**	**LECPA**
Features	Parallel I/O	Value (Step data) input Standard controller	Capable of setting up operation (step data) without using a PC or teaching box	Operation by pulse signals
Compatible motor	Step motor (Servo/24 VDC)	Servo motor (24 VDC)	Step motor (Servo/24 VDC)	
Max. number of step data	64 points		14 points	—
Power supply voltage	24 VDC			
Reference page	706-1	707	719	731

Specifications

Step Motor (Servo/24 VDC)

Model				LEFB16	LEFB25	LEFB32
Actuator specifications	Stroke [mm]*1			300, 500, 600, 700 800, 900, 1000	300, 500, 600, 700, 800, 900 1000, 1200, 1500, 1800, 2000	300, 500, 600, 700, 800, 900 1000, 1200, 1500, 1800, 2000
	Work load [kg]*2	Horizontal	JXC□1/LECP1	1	10	19
			LECPA/JXC□$^{2}_{3}$	1	5	14
	Speed [mm/s]*2			48 to 1100	48 to 1400	48 to 1500
	Max. acceleration/deceleration [mm/s^2]			3000		
	Positioning repeatability [mm]			±0.08		
	Lost motion [mm]*3			0.1 or less		
	Equivalent lead [mm]			48	48	48
	Impact/Vibration resistance [m/s^2]*4			50/20		
	Actuation type			Belt		
	Guide type			Linear guide		
	Static allowable moment*5 [N·m]		Mep (Pitching)	10	27	46
			Mey (Yawing)	10	27	46
			Mer (Rolling)	20	52	101
	Operating temperature range [°C]			5 to 40		
	Operating humidity range [%RH]			90 or less (No condensation)		
Electric specifications	Motor size			□28	□42	□56.4
	Motor type			Step motor (Servo/24 VDC)		
	Encoder			Incremental		
	Power supply voltage [V]			24 VDC ±10%		
	Power [W]*6 *8			Max. power 51	Max. power 60	Max. power 127
Lock unit specifications	Type*7			Non-magnetizing lock		
	Holding force [N]			4	19	36
	Power consumption [W]*8			2.9	5	5
	Rated voltage [V]			24 VDC ±10%		

*1 Please consult with SMC for non-standard strokes as they are produced as special orders.
*2 Speed changes according to the controller/driver type and work load. Check the "Speed–Work Load Graph (Guide)" on page 34.
Furthermore, if the cable length exceeds 5 m, then it will decrease by up to 10% for each 5 m. Cannot be used for vertical applications
*3 A reference value for correcting an error in reciprocal operation
*4 Impact resistance: No malfunction occurred when the actuator was tested with a drop tester in both an axial direction and a perpendicular direction to the lead screw. (The test was performed with the actuator in the initial state.)
Vibration resistance: No malfunction occurred in a test ranging between 45 to 2000 Hz. The test was performed in both an axial direction and a perpendicular direction to the lead screw. (The test was performed with the actuator in the initial state.)
*5 The static allowable moment is the amount of static moment which can be applied to the actuator when it is stopped.
If the product is exposed to impact or repeated load, be sure to take adequate safety measures when using the product.
*6 Indicates the max. power during operation (including the controller)
This value can be used for the selection of the power supply.
*7 With lock only
*8 For an actuator with lock, add the power consumption for the lock.

Specifications

Servo Motor (24 VDC)

Model			LEFB16A	LEFB25A
Actuator specifications	Stroke [mm]*1		300, 500, 600, 700 800, 900, 1000	300, 500, 600, 700, 800, 900 1000, 1200, 1500, 1800, 2000
	Work load [kg]*2	Horizontal	1	2
	Speed [mm/s]*2		5 to 2000	5 to 2000
	Max. acceleration/deceleration [mm/s²]		3000	
	Positioning repeatability [mm]		±0.08	
	Lost motion [mm]*3		0.1 or less	
	Equivalent lead [mm]		48	48
	Impact/Vibration resistance [m/s²]*4		50/20	
	Actuation type		Belt	
	Guide type		Linear guide	
	Static allowable moment*5 [N·m]	Mep (Pitching)	10	27
		Mey (Yawing)	10	27
		Mer (Rolling)	20	52
	Operating temperature range [°C]		5 to 40	
	Operating humidity range [%RH]		90 or less (No condensation)	
Electric specifications	Motor size		□28	□42
	Motor output [W]		30	36
	Motor type		Servo motor (24 VDC)	
	Encoder		Incremental	
	Power supply voltage [V]		24 VDC ±10%	
	Power [W]*6 *8		Max. power 87	Max. power 120
Lock unit specifications	Type*7		Non-magnetizing lock	
	Holding force [N]		4	19
	Power consumption [W]*8		2.9	5
	Rated voltage [V]		24 VDC ±10%	

*1 Please consult with SMC for non-standard strokes as they are produced as special orders.
*2 Check the "Speed–Work Load Graph (Guide)" on page 35 for details. Furthermore, if the cable length exceeds 5 m, then it will decrease by up to 10% for each 5 m.
*3 A reference value for correcting an error in reciprocal operation
*4 Impact resistance: No malfunction occurred when the actuator was tested with a drop tester in both an axial direction and a perpendicular direction to the lead screw. (The test was performed with the actuator in the initial state.)
Vibration resistance: No malfunction occurred in a test ranging between 45 to 2000 Hz. The test was performed in both an axial direction and a perpendicular direction to the lead screw. (The test was performed with the actuator in the initial state.)
*5 The static allowable moment is the amount of static moment which can be applied to the actuator when it is stopped.
If the product is exposed to impact or repeated load, be sure to take adequate safety measures when using the product.
*6 Indicates the max. power during operation (including the controller)
This value can be used for the selection of the power supply.
*7 With lock only
*8 For an actuator with lock, add the power consumption for the lock.

Weight

Series	LEFB16						
Stroke [mm]	300	500	600	700	800	900	1000
Product weight [kg]	1.19	1.45	1.58	1.71	1.84	1.97	2.10
Additional weight with lock [kg]	0.12						

Series	LEFB25										
Stroke [mm]	300	500	600	700	800	900	1000	1200	1500	1800	2000
Product weight [kg]	2.39	2.85	3.08	3.31	3.54	3.77	4.00	4.46	5.15	5.84	6.30
Additional weight with lock [kg]	0.26										

Series	LEFB32										
Stroke [mm]	300	500	600	700	800	900	1000	1200	1500	1800	2000
Product weight [kg]	4.12	4.80	5.14	5.48	5.82	6.16	6.50	7.18	8.20	9.22	9.90
Additional weight with lock [kg]	0.53										

Construction

LEFB Series

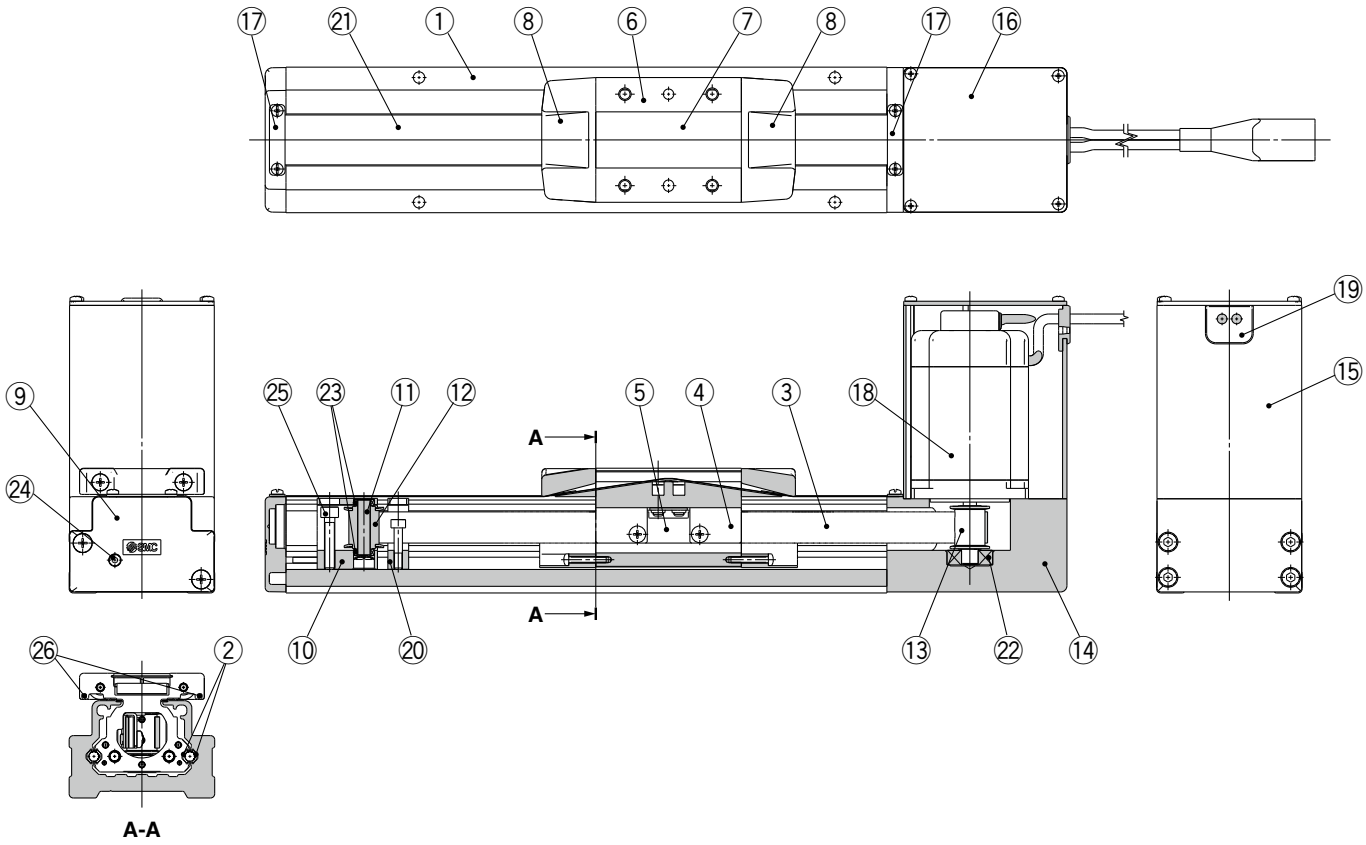

A-A

Component Parts

No.	Description	Material	Note
1	**Body**	Aluminum alloy	Anodized
2	**Rail guide**	—	
3	**Belt**	—	
4	**Belt holder**	Carbon steel	Chromating
5	**Belt stopper**	Aluminum alloy	
6	**Table**	Aluminum alloy	Anodized
7	**Blanking plate**	Aluminum alloy	Anodized
8	**Seal band holder**	Synthetic resin	
9	**Housing A**	Aluminum die-cast	Coating
10	**Pulley holder**	Aluminum alloy	
11	**Pulley shaft**	Stainless steel	
12	**End pulley**	Aluminum alloy	Anodized
13	**Motor pulley**	Aluminum alloy	Anodized
14	**Motor mount**	Aluminum alloy	Coating
15	**Motor cover**	Aluminum alloy	Anodized
16	**End cover**	Aluminum alloy	Anodized
17	**Band stopper**	Stainless steel	
18	**Motor**	—	
19	**Rubber bushing**	NBR	
20	**Stopper**	Aluminum alloy	
21	**Dust seal band**	Stainless steel	
22	**Bearing**	—	
23	**Bearing**	—	
24	**Tension adjustment cap screw**	Chromium molybdenum steel	Chromating
25	**Pulley retaining screw**	Chromium molybdenum steel	Chromating
26	**Magnet**	—	With auto switch compatibility

Dimensions: Belt Drive

LEFB16

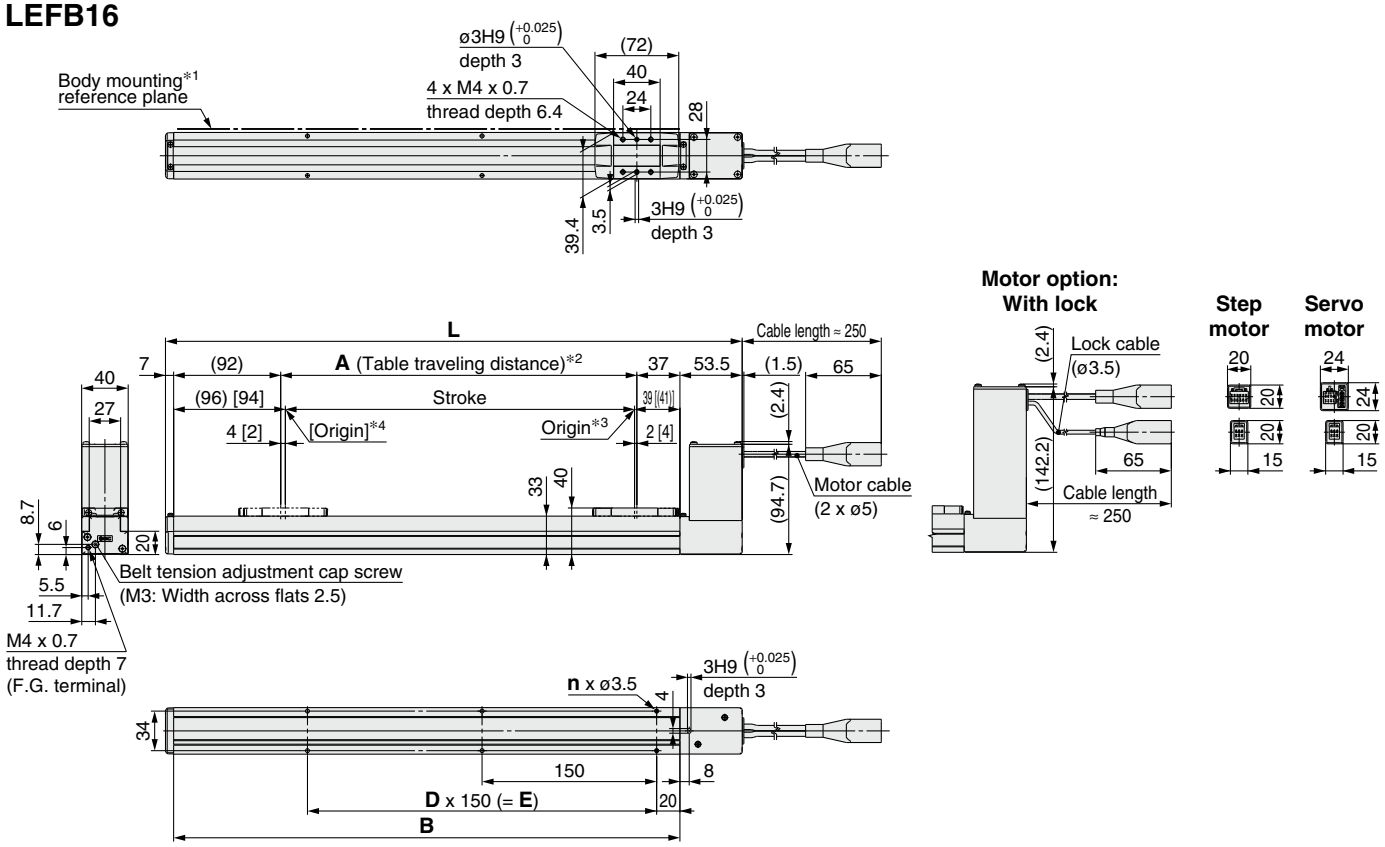

Positioning pin hole*5 (Option): Body bottom

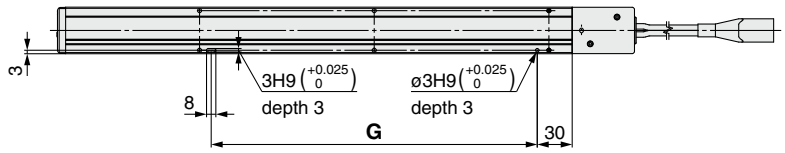

*1 When mounting the actuator using the body mounting reference plane, set the height of the opposite surface or pin to be 2 mm or more because of round chamfering. (Recommended height 5 mm)
*2 This is the distance within which the table can move when it returns to origin.
Make sure workpieces mounted on the table do not interfere with the workpieces and facilities around the table.
*3 Position after returning to origin
*4 [ ] for when the direction of return to origin has changed
*5 When using the body bottom positioning pin holes, do not simultaneously use the housing B bottom pin hole.

Dimensions [mm]

Model	L	A	B	n	D	E	G
LEFB16□T-300□	495.5	306	435	6	2	300	280
LEFB16□T-500□	695.5	506	635	10	4	600	580
LEFB16□T-600□	795.5	606	735	10	4	600	580
LEFB16□T-700□	895.5	706	835	12	5	750	730
LEFB16□T-800□	995.5	806	935	14	6	900	880
LEFB16□T-900□	1095.5	906	1035	14	6	900	880
LEFB16□T-1000□	1195.5	1006	1135	16	7	1050	1030

Dimensions: Belt Drive

LEFB25

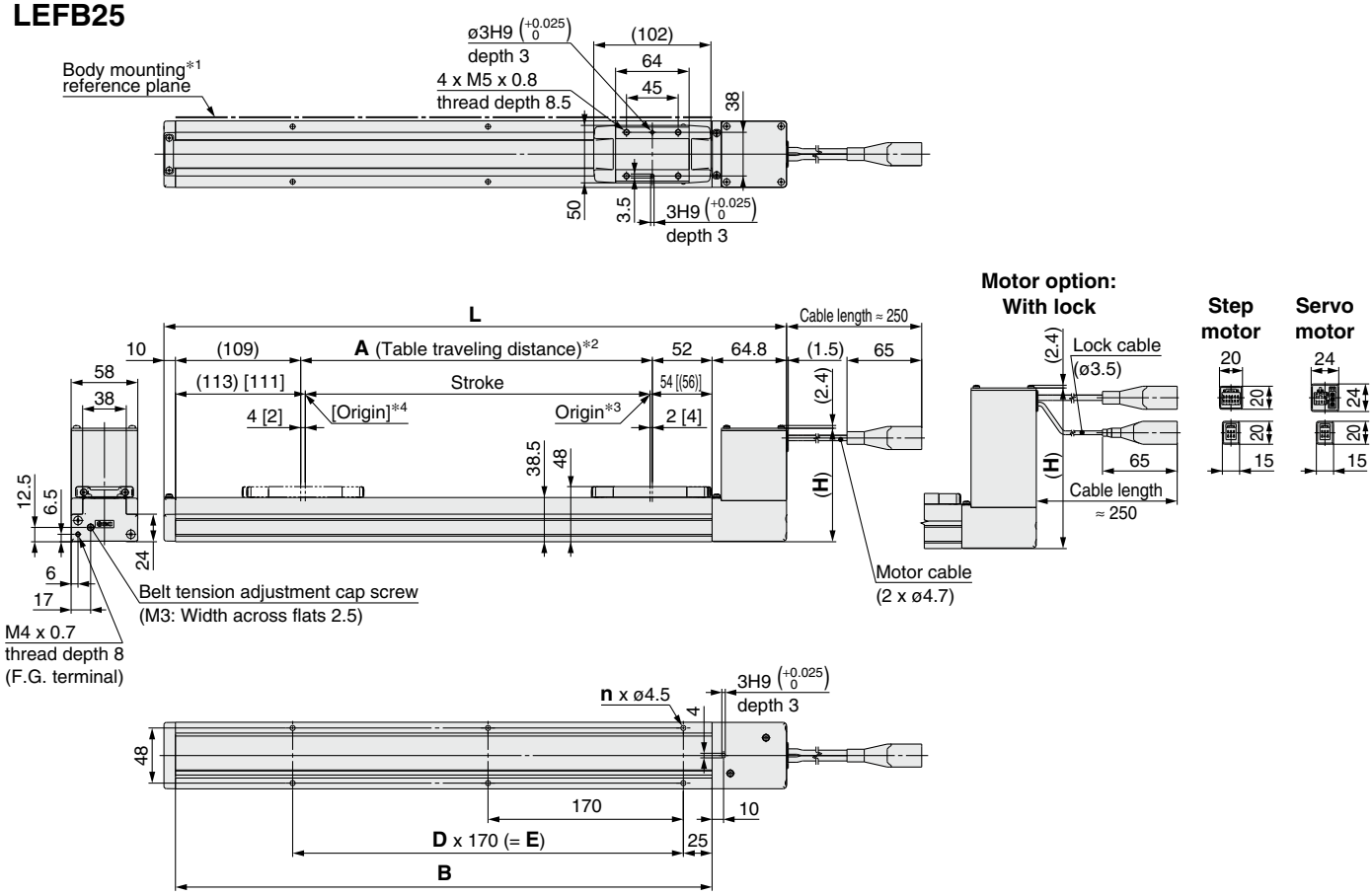

*1 When mounting the actuator using the body mounting reference plane, set the height of the opposite surface or pin to be 3 mm or more because of round chamfering. (Recommended height 5 mm)
*2 This is the distance within which the table can move when it returns to origin. Make sure workpieces mounted on the table do not interfere with the workpieces and facilities around the table.
*3 Position after returning to origin
*4 [ ] for when the direction of return to origin has changed

[mm]

Model	H
LEFB25T-ST	115.8
LEFB25T-STB	158.8
LEFB25AT-ST	98.8
LEFB25AT-STB	139.8

Dimensions

Model	L	A	B	n	D	E
LEFB25□T-300□	541.8	306	467	6	2	340
LEFB25□T-500□	741.8	506	667	8	3	510
LEFB25□T-600□	841.8	606	767	10	4	680
LEFB25□T-700□	941.8	706	867	10	4	680
LEFB25□T-800□	1041.8	806	967	12	5	850
LEFB25□T-900□	1141.8	906	1067	14	6	1020
LEFB25□T-1000□	1241.8	1006	1167	14	6	1020
LEFB25□T-1200□	1441.8	1206	1367	16	7	1190
LEFB25□T-1500□	1741.8	1506	1667	20	9	1530
LEFB25□T-1800□	2041.8	1806	1967	24	11	1870
LEFB25□T-2000□	2241.8	2006	2167	26	12	2040

Dimensions: Belt Drive

LEFB25

Positioning pin hole*1 (Option): Body bottom

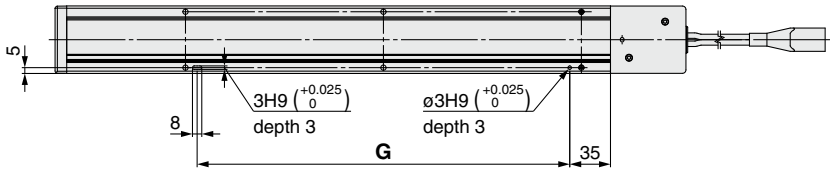

*1 When using the body bottom positioning pin holes, do not simultaneously use the housing B bottom pin hole.

With auto switch (Option)

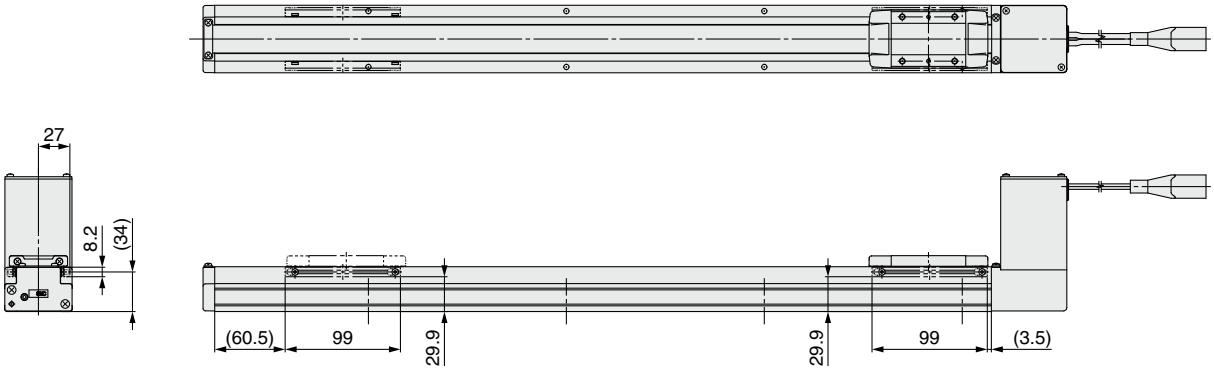

Dimensions [mm]

Model	G
LEFB25□T-300□	320
LEFB25□T-500□	490
LEFB25□T-600□	660
LEFB25□T-700□	660
LEFB25□T-800□	830
LEFB25□T-900□	1000
LEFB25□T-1000□	1000
LEFB25□T-1200□	1170
LEFB25□T-1500□	1510
LEFB25□T-1800□	1850
LEFB25□T-2000□	2020

Dimensions: Belt Drive

LEFB32

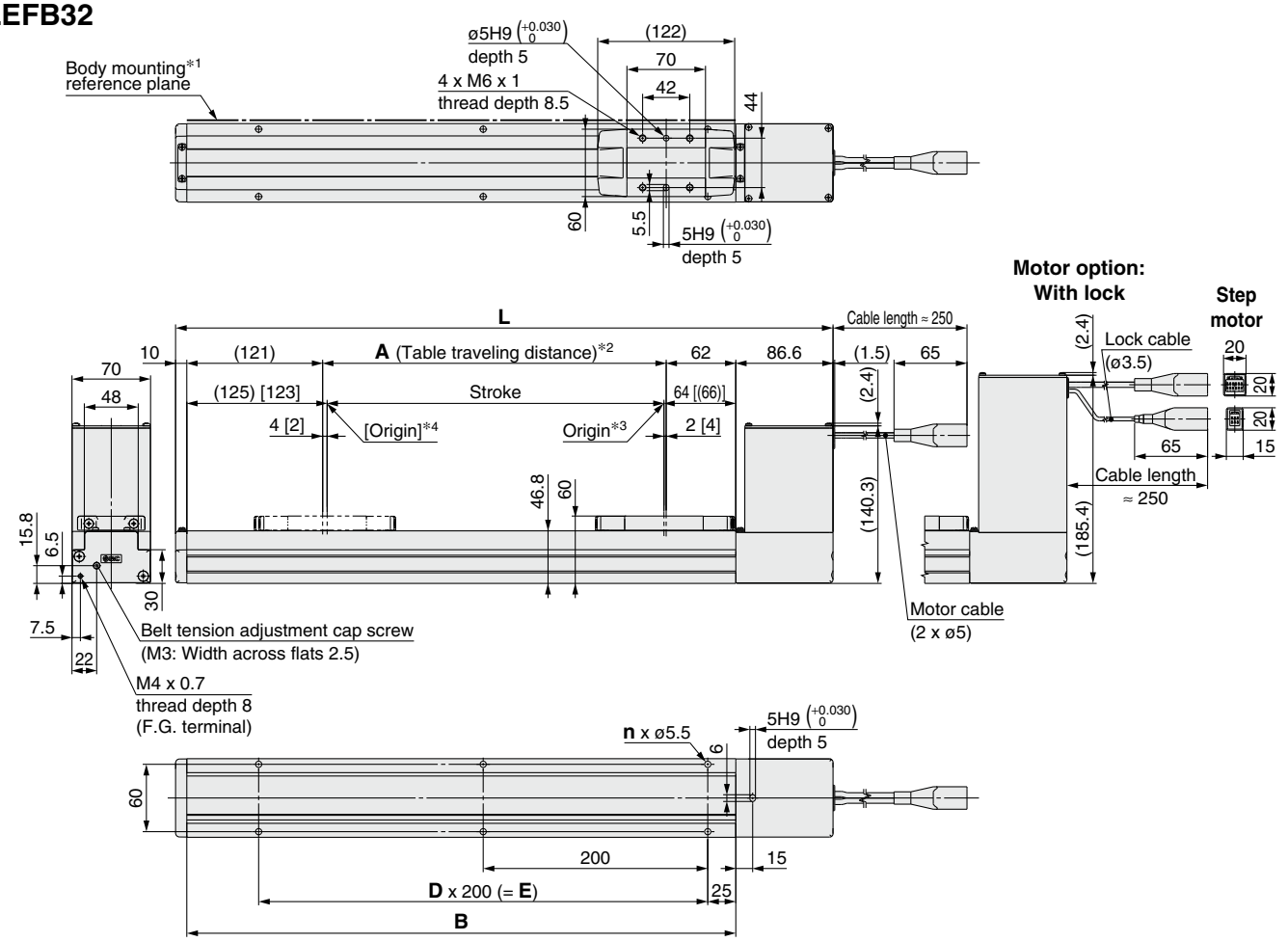

∗1 When mounting the actuator using the body mounting reference plane, set the height of the opposite surface or pin to be 3 mm or more because of round chamfering. (Recommended height 5 mm)
∗2 This is the distance within which the table can move when it returns to origin.
Make sure workpieces mounted on the table do not interfere with the workpieces and facilities around the table.
∗3 Position after returning to origin
∗4 [ ] for when the direction of return to origin has changed

Dimensions [mm]

Model	L	A	B	n	D	E
LEFB32□T-300□	585.6	306	489	6	2	400
LEFB32□T-500□	785.6	506	689	8	3	600
LEFB32□T-600□	885.6	606	789	8	3	600
LEFB32□T-700□	985.6	706	889	10	4	800
LEFB32□T-800□	1085.6	806	989	10	4	800
LEFB32□T-900□	1185.6	906	1089	12	5	1000
LEFB32□T-1000□	1285.6	1006	1189	12	5	1000
LEFB32□T-1200□	1485.6	1206	1389	14	6	1200
LEFB32□T-1500□	1785.6	1506	1689	18	8	1600
LEFB32□T-1800□	2085.6	1806	1989	20	9	1800
LEFB32□T-2000□	2285.6	2006	2189	22	10	2000

Dimensions: Belt Drive

LEFB32

Positioning pin hole*1 (Option): Body bottom

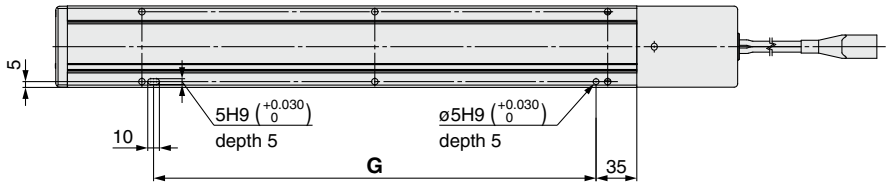

*1 When using the body bottom positioning pin holes, do not simultaneously use the housing B bottom pin hole.

With auto switch (Option)

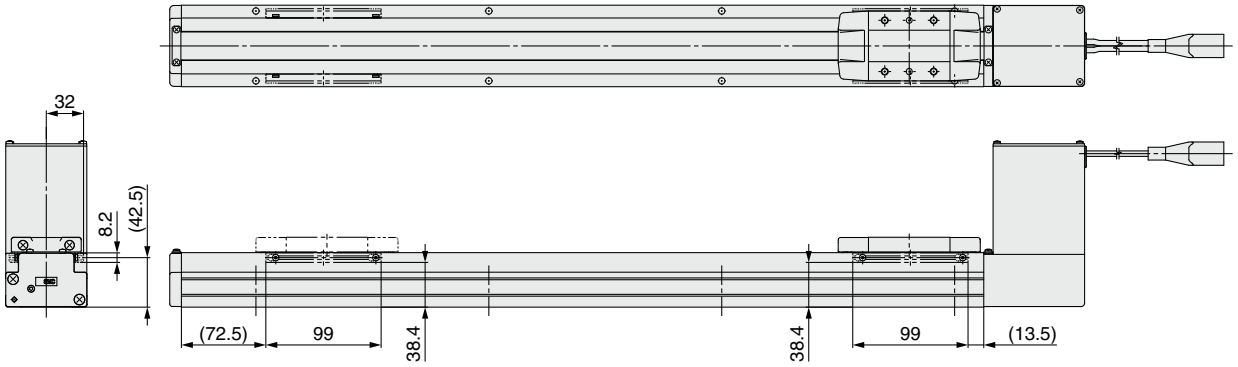

Dimensions [mm]

Model	G
LEFB32□T-300□	380
LEFB32□T-500□	580
LEFB32□T-600□	580
LEFB32□T-700□	780
LEFB32□T-800□	780
LEFB32□T-900□	980
LEFB32□T-1000□	980
LEFB32□T-1200□	1180
LEFB32□T-1500□	1580
LEFB32□T-1800□	1780
LEFB32□T-2000□	1980

Electric Actuator/Slider Type Belt Drive

LEFB Series LEFB25, 32, 40

The LECSB-S, LECSC-S, and LECSS-S electric actuator drivers are to be discontinued. The LECSB-T, LECSC-T, and LECSS-T drivers are available as substitutes. In the product number, select T6 instead of S6, T7 instead of S7, or T8 instead of S8 for the ❸ **Motor type**, and select B2 instead of B1, C2 instead of C1, or S2 instead of S1 for the ⓫ **Driver type**.

LECY□ Series p. 140 **Motorless Type** p. 851

Click here for details. Click here for details. RoHS

How to Order

LEFB ❶ ❷ ❸ ❹ – ❺ ❻ ❼ ❽ – ❾ ❿ ⓫ ⓬

❶ Size

25
32
40

❷ Motor mounting position

Nil	Top mounting
U	Bottom mounting

❹ Equivalent lead

S	54 mm

❺ Stroke

300	300 mm
to	to
3000	3000 mm

∗ For details, refer to the applicable stroke table.

❸ Motor type

Symbol	Type	Output [W]	Actuator size	Compatible driver	UL-compliant
S2∗1	AC servo motor (Incremental encoder)	100	25	LECSA□-S1	●
S3		200	32	LECSA□-S3	●
S4		400	40	LECSA2-S4	●
S6∗1	AC servo motor (Absolute encoder)	100	25	LECSB□-S5 LECSC□-S5 LECSS□-S5	—
S7		200	32	LECSB□-S7 LECSC□-S7 LECSS□-S7	—
S8		400	40	LECSB2-S8 LECSC2-S8 LECSS2-S8	—
T6∗2	AC servo motor (Absolute encoder)	100	25	LECSB2-T5 LECSC2-T5 LECSN2-T5-□	—
				LECSS2-T5	●
T7		200	32	LECSB2-T7 LECSC2-T7 LECSN2-T7-□	—
				LECSS2-T7	●
T8		400	40	LECSB2-T8 LECSC2-T8 LECSN2-T8-□	—
				LECSS2-T8	●

∗1 For motor type S2 and S6, the compatible driver part number suffixes are S1 and S5 respectively.
∗2 For motor type T6, the compatible driver part number is LECS□2-T5.

❻ Motor option

Nil	Without option
B	With lock

❼ Auto switch compatibility

Nil	None
C	With (Includes 1 mounting bracket)

∗ If 2 or more are required, please order them separately. (Part no.: LEF-D-2-1 For details, refer to page 161.)
∗ Order auto switches separately. (For details, refer to pages 162 to 164.)
∗ When "Nil" is selected, the product will not come with a built-in magnet for an auto switch, and so a mounting bracket cannot be secured. Be sure to select an appropriate model initially as the product cannot be changed to have auto switch compatibility after purchase.

❽ Positioning pin hole

Nil	Housing B bottom∗1	Housing B bottom
K	Body bottom 2 locations	Body bottom

∗1 Refer to the body mounting example on page 166 for the mounting method.

❾ Cable type∗1 ∗2

Nil	Without cable
S	Standard cable
R	Robotic cable (Flexible cable)

∗1 The motor and encoder cables are included. (The lock cable is also included when the motor with lock option is selected.)
∗2 Standard cable entry direction is "(A) Axis side." (Refer to page 796 for details.)

❿ Cable length [m]

Nil	Without cable
2	2
5	5
A	10

∗ The length of the encoder, motor and lock cables are the same.

⓫ Driver type

	Compatible drivers	Power supply voltage	Size 25	32	40
Nil	Without driver	—	●	●	●
A1	LECSA1-S□	100 to 120	●	●	—
A2	LECSA2-S□	200 to 230	●	●	●
B1	LECSB1-S□	100 to 120	●	●	—
B2	LECSB2-S□	200 to 230	●	●	●
	LECSB2-T□	200 to 240	●	●	●
C1	LECSC1-S□	100 to 120	●	●	—
C2	LECSC2-S□	200 to 230	●	●	●
	LECSC2-T□		●	●	●
S1	LECSS1-S□	100 to 120	●	●	—
S2	LECSS2-S□	200 to 230	●	●	●
	LECSS2-T□	200 to 240	●	●	●
N2	LECSN2-T□	200 to 240	●	●	●
E2	LECSN2-T□-E	200 to 240	●	●	●
92	LECSN2-T□-9	200 to 240	●	●	●
P2	LECSN2-T□-P	200 to 240	●	●	●

∗ When a driver type is selected, a cable is included. Select the cable type and cable length.
Example) S2S2: Standard cable (2 m) + Driver (LECSS2)
S2: Standard cable (2 m)
Nil: Without cable and driver

⓬ I/O cable length [m]∗1

Nil	Without cable
H	Without cable (Connector only)
1	1.5

∗1 When "Without driver" is selected for driver type, only "Nil: Without cable" can be selected. Refer to page 797 if I/O cable is required. (Options are shown on page 797.)

Applicable Stroke Table

●: Standard/○: Produced upon receipt of order

	300	400	500	600	700	800	900	1000	1100	1200	1300	1400	1500	1600	1700	1800	1900	2000	2500	3000
LEFB25	●	●	●	●	●	●	●	●	○	●	○	○	●	○	○	○	○	●	—	—
LEFB32	●	●	●	●	●	●	●	●	○	●	○	○	●	○	○	○	○	●	●	—
LEFB40	●	●	●	●	●	●	●	●	○	●	○	○	●	○	○	○	○	●	●	●

∗ Please consult with SMC for non-standard strokes as they are produced as special orders.

Support Guide/*LEFG Series*

The support guide was designed to support workpieces with significant overhang.

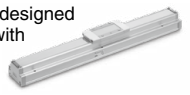

p. 156

Compatible Drivers

For auto switches, refer to pages 161 to 164.

Driver type	Pulse input type/ Positioning type	Pulse input type	CC-Link direct input type	SSCNET Ⅲ type	Pulse input type	CC-Link direct input type	SSCNET Ⅲ/H type	Network card type
Series	LECSA	LECSB	LECSC	LECSS	LECSB-T	LECSC-T	LECSS-T	LECSN-T
Number of point tables∗1	Up to 7	—	Up to 255 (2 stations occupied)	—	Up to 255	Up to 255 (2 stations occupied)	—	Up to 255
Pulse input	○	○	—	—	○	—	—	—
Applicable network	—	—	CC-Link	SSCNET Ⅲ	—	CC-Link	SSCNET Ⅲ/H	PROFINET EtherCAT® EtherNet/IP™
Control encoder	Incremental 17-bit encoder	Absolute 18-bit encoder	Absolute 18-bit encoder	Absolute 18-bit encoder	Absolute 22-bit encoder	Absolute 18-bit encoder	Absolute 22-bit encoder	Absolute 22-bit encoder
Communication function	USB communication	USB communication, RS422 communication		USB communication	USB communication, RS422 communication		USB communication	USB communication
Power supply voltage [V]	100 to 120 VAC (50/60 Hz), 200 to 230 VAC (50/60 Hz)				200 to 240 VAC (50/60 Hz)	200 to 230 VAC (50/60 Hz)	200 to 240 VAC (50/60 Hz)	200 to 240 VAC (50/60 Hz)
Reference page	777							

∗1 The LECSN-T only supports PROFINET and EtherCAT®.

Specifications

AC Servo Motor

Model			LEFB25S$^{2}_{6}$/T6	LEFB32S$^{3}_{7}$/T7	LEFB40S$^{4}_{8}$/T8
Actuator specifications	Stroke [mm]*1		300, 400, 500 600, 700, 800 900, 1000, (1100) 1200, (1300, 1400) 1500, (1600, 1700) (1800, 1900), 2000	300, 400, 500 600, 700, 800 900, 1000, (1100) 1200, (1300, 1400) 1500, (1600, 1700) (1800, 1900), 2000 2500	300, 400, 500 600, 700, 800 900, 1000, (1100) 1200, (1300, 1400) 1500, (1600, 1700) (1800, 1900), 2000 2500, 3000
	Work load [kg]*2	Horizontal	5	15	25
	Max. speed [mm/s]		2000	2000	2000
	Max. acceleration/deceleration [mm/s²]		20000 (Refer to page 50 for limit according to work load and duty ratio.)*3		
	Positioning repeatability [mm]		±0.06		
	Lost motion [mm]*4		0.1 or less		
	Equivalent lead [mm]		54		
	Impact/Vibration resistance [m/s²]*5		50/20		
	Actuation type		Belt		
	Guide type		Linear guide		
	Static allowable moment*6 [N·m]	Mep (Pitching)	27	46	110
		Mey (Yawing)	27	46	110
		Mer (Rolling)	52	101	207
	Operating temperature range [°C]		5 to 40		
	Operating humidity range [%RH]		90 or less (No condensation)		
Electric specifications	Motor output/Size		100 W/□40	200 W/□60	400 W/□60
	Motor type		AC servo motor (100/200 VAC)		
	Encoder*9		Motor type S2, S3, S4: Incremental 17-bit encoder (Resolution: 131072 p/rev) Motor type S6, S7, S8: Absolute 18-bit encoder (Resolution: 262144 p/rev) Motor type T6, T7, T8: Absolute 22-bit encoder (Resolution: 4194304 p/rev) (For LECSB2-T□, LECSS2-T□) Motor type T6, T7, T8: Absolute 18-bit encoder (Resolution: 262144 p/rev) (For LECSC2-T□)		
	Power [W]*7		Max. power 445	Max. power 725	Max. power 1275
Lock unit specifications	Type*8		Non-magnetizing lock		
	Holding force [N]		27	54	110
	Power consumption at 20°C [W]		6.3	7.9	7.9
	Rated voltage [V]		24 $^{0}_{-10\%}$		

*1 Please consult with SMC for non-standard strokes as they are produced as special orders.
*2 For details, refer to the "Speed–Work Load Graph (Guide)" on page 50.
*3 Maximum acceleration/deceleration changes according to the work load. Check the "Work Load–Acceleration/Deceleration Graph" of the catalog.
*4 A reference value for correcting an error in reciprocal operation
*5 Impact resistance: No malfunction occurred when the actuator was tested with a drop tester in both an axial direction and a perpendicular direction to the lead screw. (The test was performed with the actuator in the initial state.)
Vibration resistance: No malfunction occurred in a test ranging between 45 to 2000 Hz. The test was performed in both an axial direction and a perpendicular direction to the lead screw. (The test was performed with the actuator in the initial state.)
*6 The static allowable moment is the amount of static moment which can be applied to the actuator when it is stopped.
If the product is exposed to impact or repeated load, be sure to take adequate safety measures when using the product.
*7 Indicates the max. power during operation (including the driver)
When selecting the power supply capacity, refer to the power supply capacity in the operation manual of each driver.
*8 Only when motor option "With lock" is selected
*9 For motor type T6, T7, and T8, the resolution will change depending on the driver type.

Weight

Series		LEFB25□□																	
Stroke [mm]		300	400	500	600	700	800	900	1000	1100	1200	1300	1400	1500	1600	1700	1800	1900	2000
Motor type	S2	3.00	3.25	3.50	3.75	4.00	4.25	4.50	4.75	5.00	5.25	5.50	5.75	6.00	6.25	6.50	6.75	7.00	7.25
	S6	3.06	3.31	3.56	3.81	4.06	4.31	4.56	4.81	5.06	5.31	5.56	5.81	6.06	6.31	6.56	6.81	7.06	7.31
	T6	3.04	3.29	3.54	3.79	4.04	4.29	4.54	4.79	5.04	5.29	5.54	5.79	6.04	6.29	6.54	6.79	7.04	7.29
Additional weight with lock [kg]		S2: 0.2/S6: 0.3/T6: 0.3																	

Series		LEFB32□□																		
Stroke [mm]		300	400	500	600	700	800	900	1000	1100	1200	1300	1400	1500	1600	1700	1800	1900	2000	2500
Motor type	S3	4.90	5.25	5.60	5.95	6.30	6.65	7.00	7.35	7.70	8.05	8.40	8.75	9.10	9.45	9.80	10.15	10.50	10.85	12.60
	S7	4.84	5.19	5.54	5.81	6.24	6.59	6.94	7.29	7.64	7.99	8.34	8.69	9.04	9.39	9.74	10.09	10.44	10.79	12.54
	T7	4.81	5.16	5.51	5.78	6.21	6.56	6.91	7.26	7.61	7.96	8.31	8.66	9.01	9.36	9.71	10.06	10.41	10.76	12.51
Additional weight with lock [kg]		S3: 0.4/S7: 0.7/T7: 0.5																		

Series		LEFB40□□																			
Stroke [mm]		300	400	500	600	700	800	900	1000	1100	1200	1300	1400	1500	1600	1700	1800	1900	2000	2500	3000
Motor type	S4	7.12	7.57	8.02	8.47	8.92	9.37	9.82	10.27	10.72	11.17	11.62	12.07	12.52	12.97	13.42	13.87	14.32	14.72	17.02	19.27
	S8	7.22	7.67	8.12	8.57	9.02	9.47	9.92	10.37	10.82	11.27	11.72	12.17	12.62	13.07	13.52	13.97	14.42	14.82	17.12	19.37
	T8	7.21	7.66	8.11	8.56	9.01	9.46	9.91	10.36	10.81	11.26	11.71	12.16	12.61	13.06	13.51	13.96	14.41	14.81	17.11	19.36
Additional weight with lock [kg]		S4: 0.5/S8: 0.7/T8: 0.5																			

Construction

LEFB25S□S

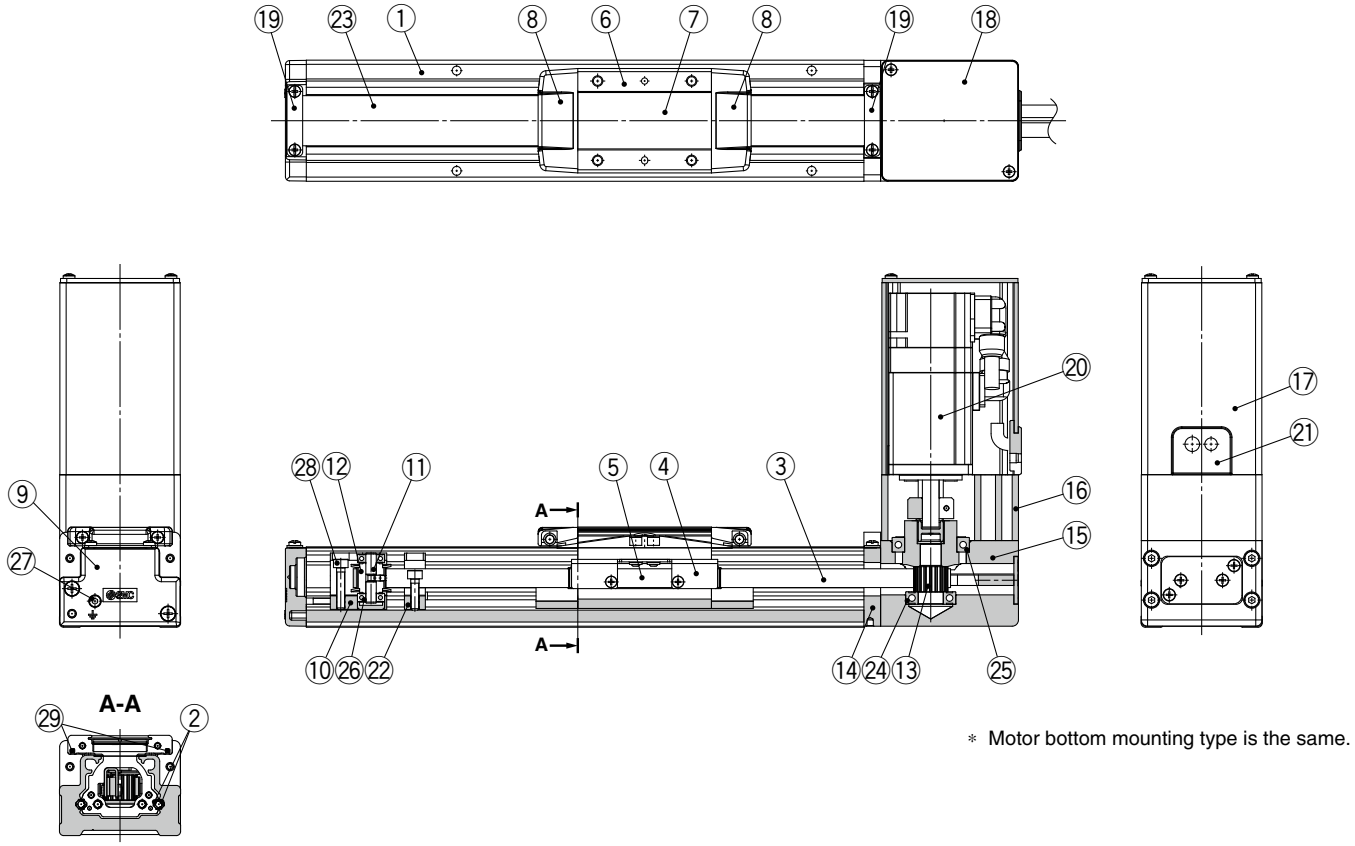

∗ Motor bottom mounting type is the same.

Component Parts

No.	Description	Material	Note
1	**Body**	Aluminum alloy	Anodized
2	**Rail guide**		
3	**Belt**		
4	**Belt holder**	Carbon steel	Chromating
5	**Belt stopper**	Aluminum alloy	
6	**Table**	Aluminum alloy	Anodized
7	**Blanking plate**	Aluminum alloy	Anodized
8	**Seal band holder**	Synthetic resin	
9	**Housing A**	Aluminum die-cast	Coating
10	**Pulley holder**	Aluminum alloy	
11	**Pulley shaft**	Stainless steel	
12	**End pulley**	Aluminum alloy	Anodized
13	**Motor pulley**	Aluminum alloy	Anodized
14	**Return flange**	Aluminum alloy	Coating
15	**Housing**	Aluminum alloy	Coating

Component Parts

No.	Description	Material	Note
16	**Motor mount**	Aluminum alloy	Coating
17	**Motor cover**	Aluminum alloy	Anodized
18	**Motor end cover**	Aluminum alloy	Anodized
19	**Band stopper**	Stainless steel	
20	**Motor**		
21	**Rubber bushing**	NBR	
22	**Stopper**	Aluminum alloy	
23	**Dust seal band**	Stainless steel	
24	**Bearing**		
25	**Bearing**		
26	**Spacer**	Aluminum alloy	
27	**Tension adjustment cap screw**	Chromium molybdenum steel	Chromating
28	**Pulley retaining screw**	Chromium molybdenum steel	Chromating
29	**Magnet**	—	With auto switch compatibility

Construction

LEFB32/40S□S

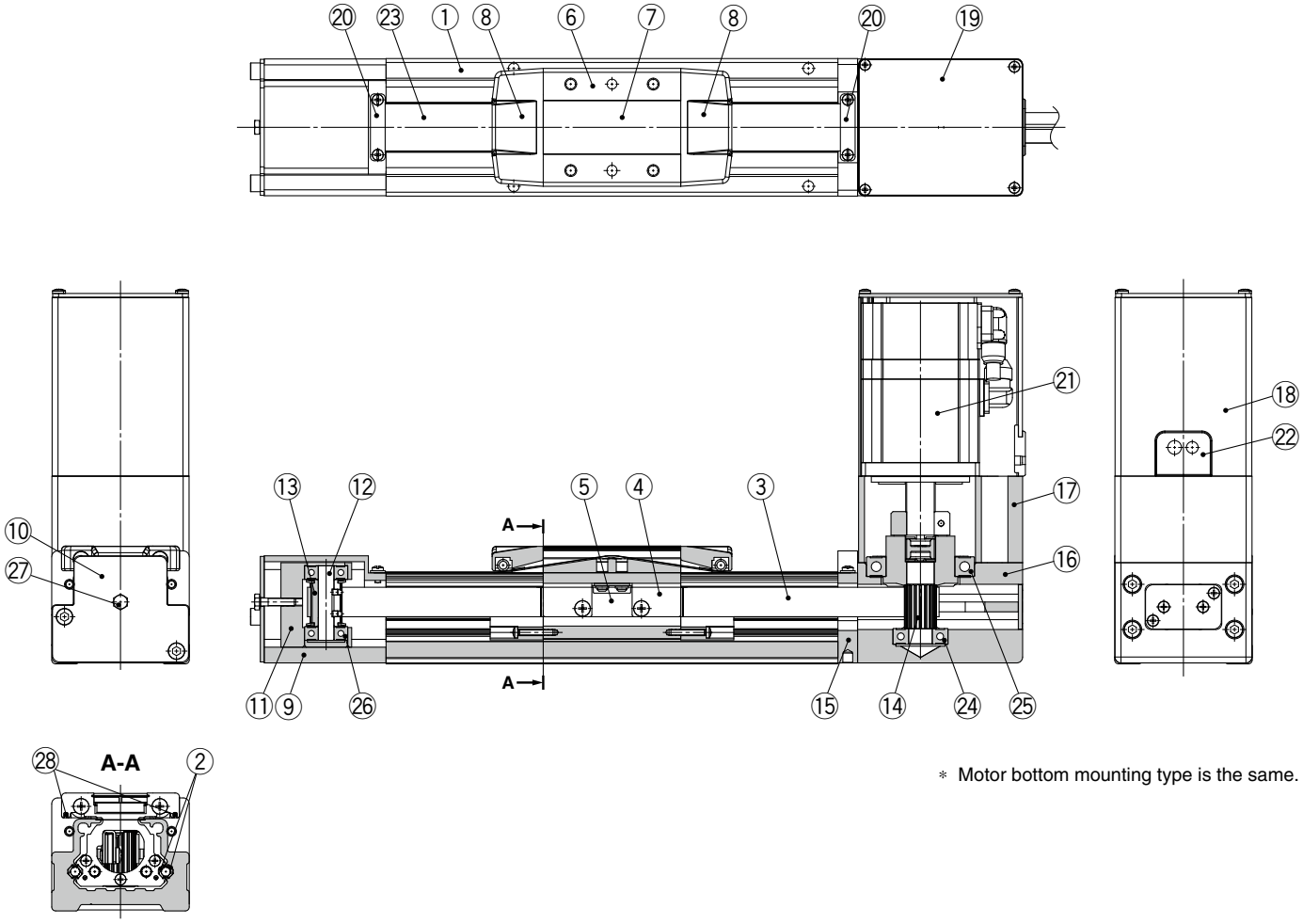

∗ Motor bottom mounting type is the same.

Component Parts

No.	Description	Material	Note
1	**Body**	Aluminum alloy	Anodized
2	**Rail guide**		
3	**Belt**		
4	**Belt holder**	Carbon steel	Chromating
5	**Belt stopper**	Aluminum alloy	
6	**Table**	Aluminum alloy	Anodized
7	**Blanking plate**	Aluminum alloy	Anodized
8	**Seal band holder**	Synthetic resin	
9	**End block**	Aluminum alloy	Coating
10	**End block cover**		
11	**Pulley holder**	Aluminum alloy	
12	**Pulley shaft**	Stainless steel	
13	**End pulley**	Aluminum alloy	Anodized
14	**Motor pulley**	Aluminum alloy	Anodized

Component Parts

No.	Description	Material	Note
15	**Return flange**	Aluminum alloy	Coating
16	**Housing**	Aluminum alloy	Coating
17	**Motor mount**	Aluminum alloy	Coating
18	**Motor cover**	Aluminum alloy	Anodized
19	**Motor end cover**	Aluminum alloy	Anodized
20	**Band stopper**	Stainless steel	
21	**Motor**		
22	**Rubber bushing**	NBR	
23	**Dust seal band**	Stainless steel	
24	**Bearing**		
25	**Bearing**		
26	**Bearing**		
27	**Tension adjustment bolt**	Chromium molybdenum steel	Chromating
28	**Magnet**	—	With auto switch compatibility

Dimensions: Belt Drive

LEFB25/Motor top mounting type

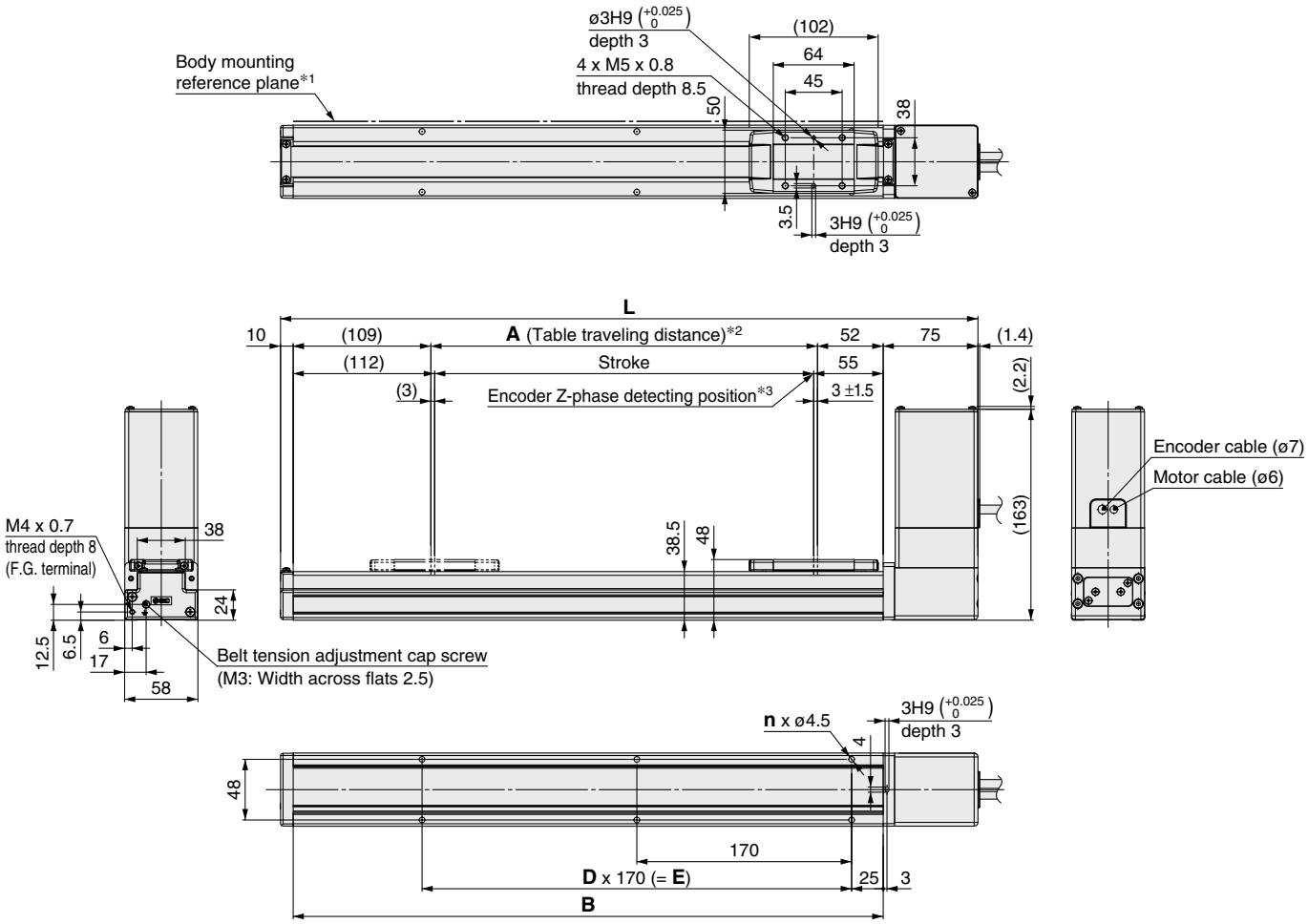

*1 When mounting the actuator using the body mounting reference plane, set the height of the opposite surface or pin to be 3 mm or more because of round chamfering. (Recommended height 5 mm)
*2 This is the distance within which the table can move when it returns to origin. Make sure workpieces mounted on the table do not interfere with the workpieces and facilities around the table.
*3 The Z-phase first detecting position from the stroke end of the motor side

Motor option: With lock

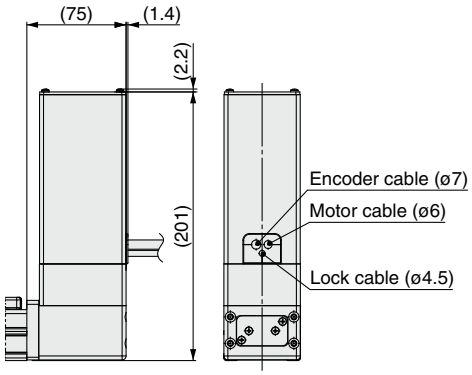

Dimensions

[mm]

Stroke	L	A	B	n	D	E
300	552	306	467	6	2	340
400	652	406	567	8	3	510
500	752	506	667	8	3	510
600	852	606	767	10	4	680
700	952	706	867	10	4	680
800	1052	806	967	12	5	850
900	1152	906	1067	14	6	1020
1000	1252	1006	1167	14	6	1020
1100	1352	1106	1267	16	7	1190
1200	1452	1206	1367	16	7	1190
1300	1552	1306	1467	18	8	1360
1400	1652	1406	1567	20	9	1530
1500	1752	1506	1667	20	9	1530
1600	1852	1606	1767	22	10	1700
1700	1952	1706	1867	22	10	1700
1800	2052	1806	1967	24	11	1870
1900	2152	1906	2067	24	11	1870
2000	2252	2006	2167	26	12	2040

Dimensions: Belt Drive

LEFB25/Motor top mounting type

Positioning pin hole*1 (Option): Body bottom

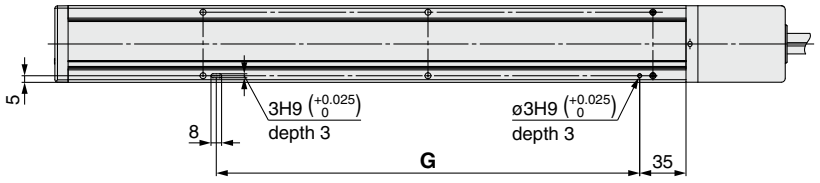

*1 When using the body bottom positioning pin holes, do not simultaneously use the housing B bottom pin hole.

With auto switch (Option)

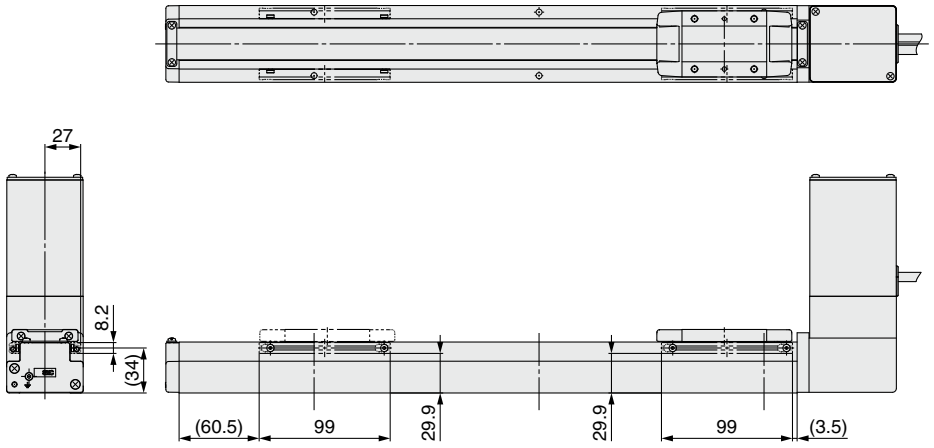

Dimensions [mm]

Stroke	G
300	320
400	490
500	490
600	660
700	660
800	830
900	1000
1000	1000
1100	1170
1200	1170
1300	1340
1400	1510
1500	1510
1600	1680
1700	1680
1800	1850
1900	1850
2000	2020

Dimensions: Belt Drive

LEFB25U/Motor bottom mounting type

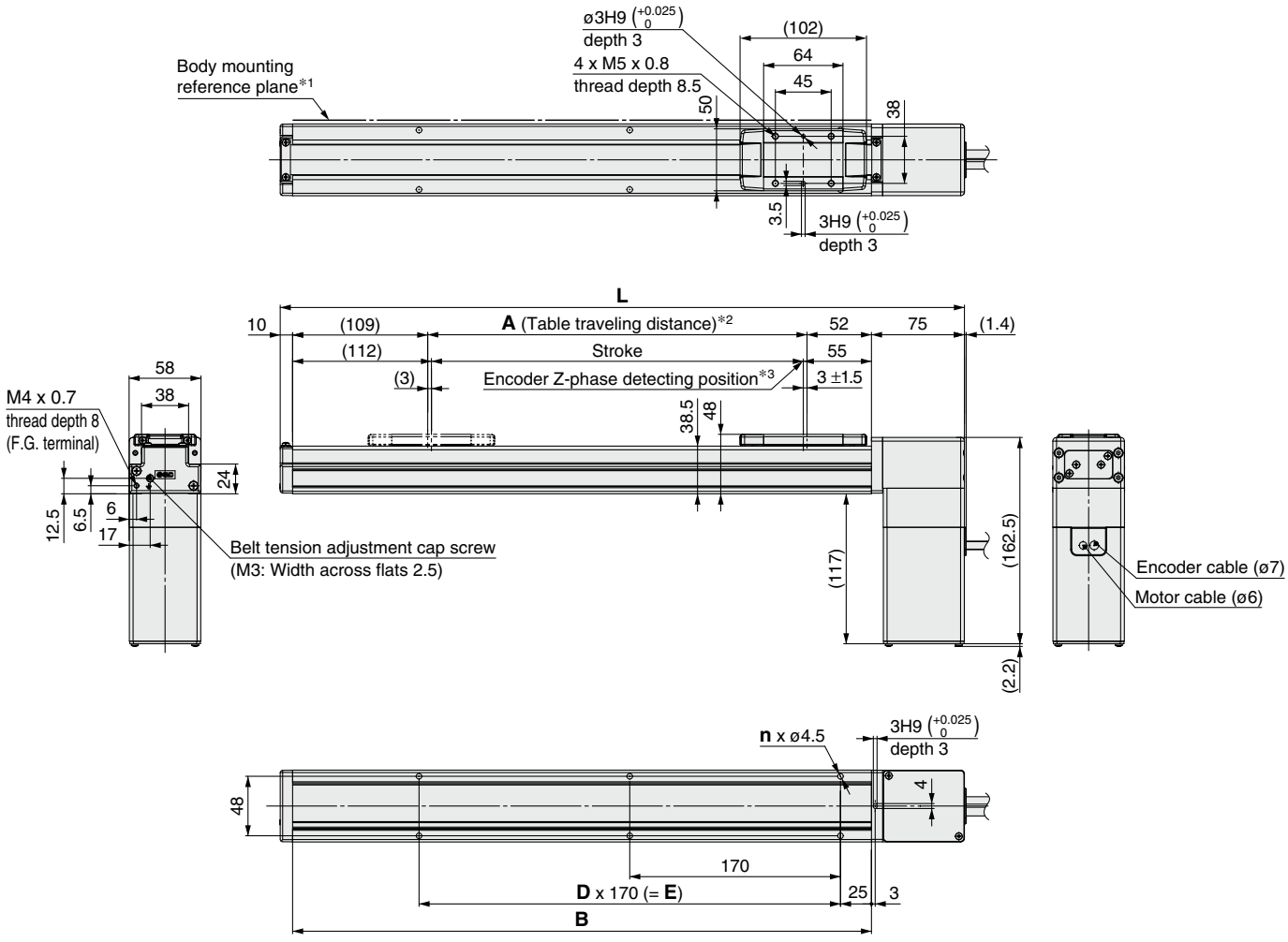

*1 When mounting the actuator using the body mounting reference plane, set the height of the opposite surface or pin to be 3 mm or more because of round chamfering. (Recommended height 5 mm)
*2 This is the distance within which the table can move when it returns to origin. Make sure workpieces mounted on the table do not interfere with the workpieces and facilities around the table.
*3 The Z-phase first detecting position from the stroke end of the motor side

Motor option: With lock

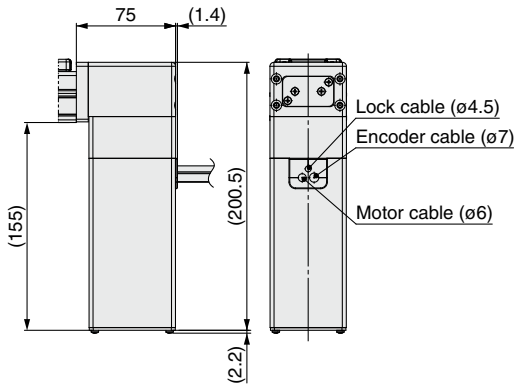

Dimensions

[mm]

Stroke	L	A	B	n	D	E
300	552	306	467	6	2	340
400	652	406	567	8	3	510
500	752	506	667	8	3	510
600	852	606	767	10	4	680
700	952	706	867	10	4	680
800	1052	806	967	12	5	850
900	1152	906	1067	14	6	1020
1000	1252	1006	1167	14	6	1020
1100	1352	1106	1267	16	7	1190
1200	1452	1206	1367	16	7	1190
1300	1552	1306	1467	18	8	1360
1400	1652	1406	1567	20	9	1530
1500	1752	1506	1667	20	9	1530
1600	1852	1606	1767	22	10	1700
1700	1952	1706	1867	22	10	1700
1800	2052	1806	1967	24	11	1870
1900	2152	1906	2067	24	11	1870
2000	2252	2006	2167	26	12	2040

Dimensions: Belt Drive

LEFB25U/Motor bottom mounting type

Positioning pin hole*1 (Option): Body bottom

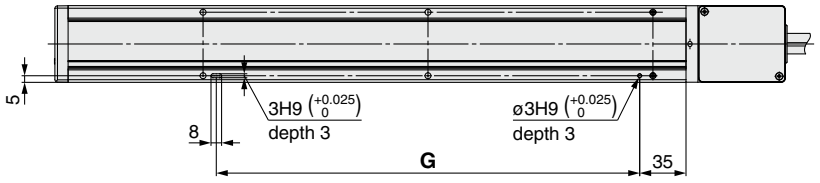

*1 When using the body bottom positioning pin holes, do not simultaneously use the housing B bottom pin hole.

With auto switch (Option)

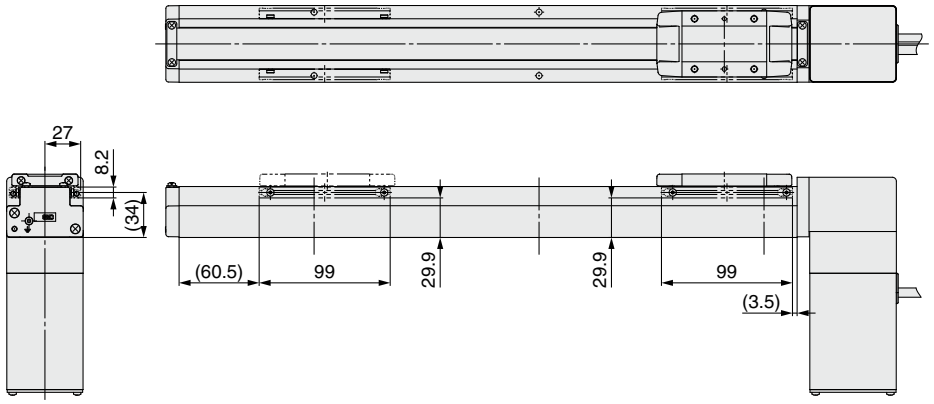

Dimensions [mm]

Stroke	G
300	320
400	490
500	490
600	660
700	660
800	830
900	1000
1000	1000
1100	1170
1200	1170
1300	1340
1400	1510
1500	1510
1600	1680
1700	1680
1800	1850
1900	1850
2000	2020

Dimensions: Belt Drive

LEFB32/Motor top mounting type

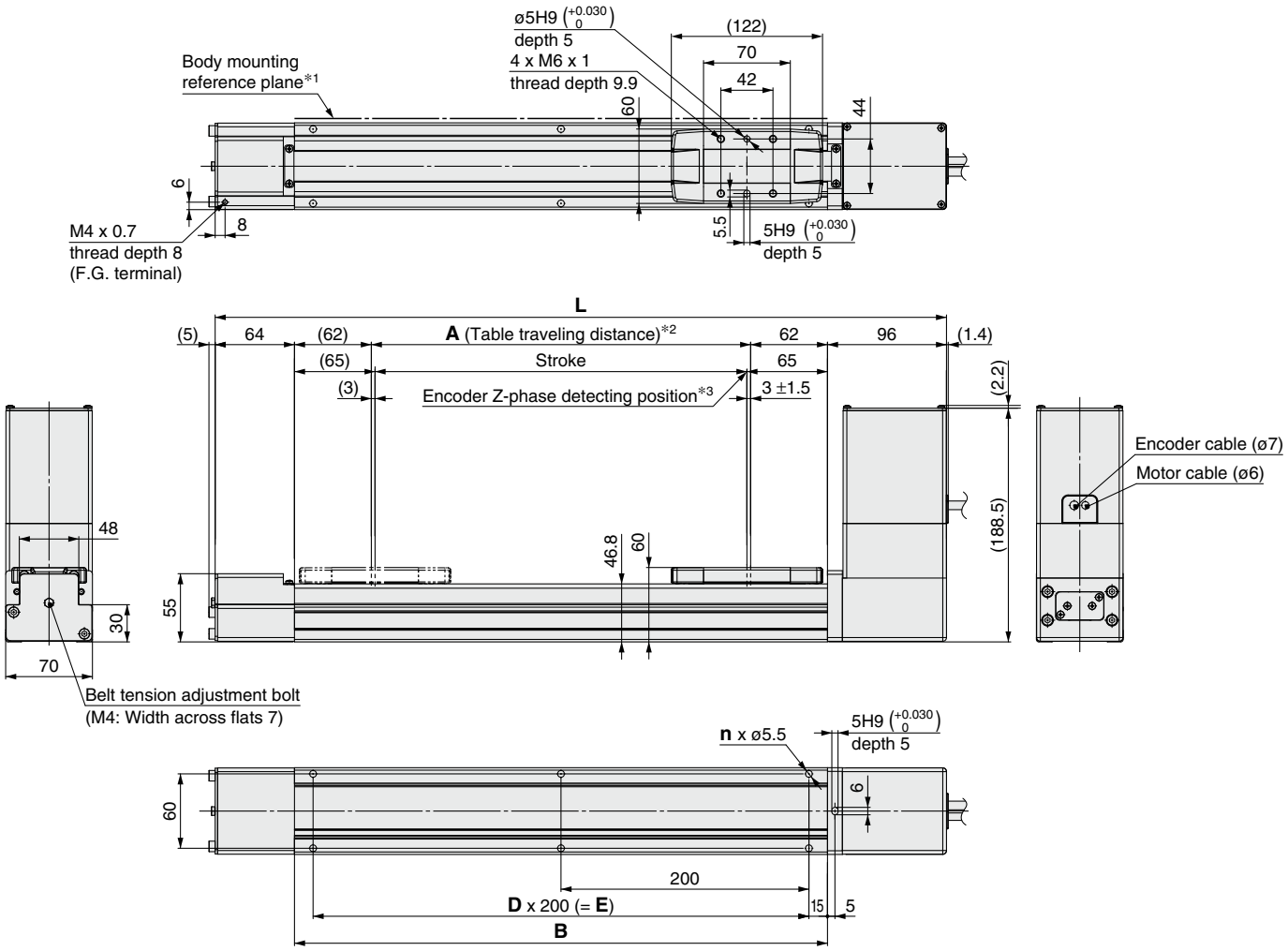

*1 When mounting the actuator using the body mounting reference plane, set the height of the opposite surface or pin to be 3 mm or more because of round chamfering. (Recommended height 5 mm)

*2 This is the distance within which the table can move when it returns to origin. Make sure workpieces mounted on the table do not interfere with the workpieces and facilities around the table.

*3 The Z-phase first detecting position from the stroke end of the motor side

Motor option: With lock

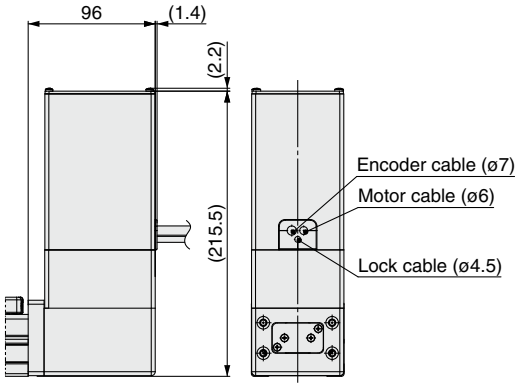

Dimensions [mm]

Stroke	L	A	B	n	D	E
300	590	306	430	6	2	400
400	690	406	530	6	2	400
500	790	506	630	8	3	600
600	890	606	730	8	3	600
700	990	706	830	10	4	800
800	1090	806	930	10	4	800
900	1190	906	1030	12	5	1000
1000	1290	1006	1130	12	5	1000
1100	1390	1106	1230	14	6	1200
1200	1490	1206	1330	14	6	1200
1300	1590	1306	1430	16	7	1400
1400	1690	1406	1530	16	7	1400
1500	1790	1506	1630	18	8	1600
1600	1890	1606	1730	18	8	1600
1700	1990	1706	1830	20	9	1800
1800	2090	1806	1930	20	9	1800
1900	2190	1906	2030	22	10	2000
2000	2290	2006	2130	22	10	2000
2500	2790	2506	2630	28	13	2600

Dimensions: Belt Drive

LEFB32/Motor top mounting type

Positioning pin hole*1 (Option): Body bottom

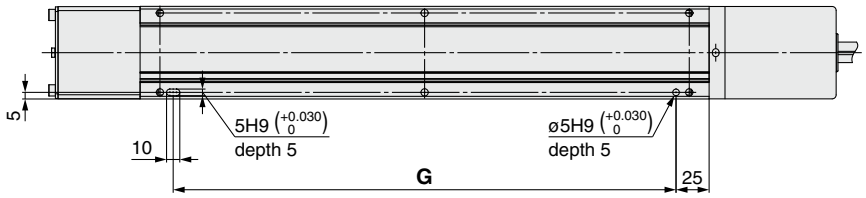

*1 When using the body bottom positioning pin holes, do not simultaneously use the housing B bottom pin hole.

With auto switch (Option)

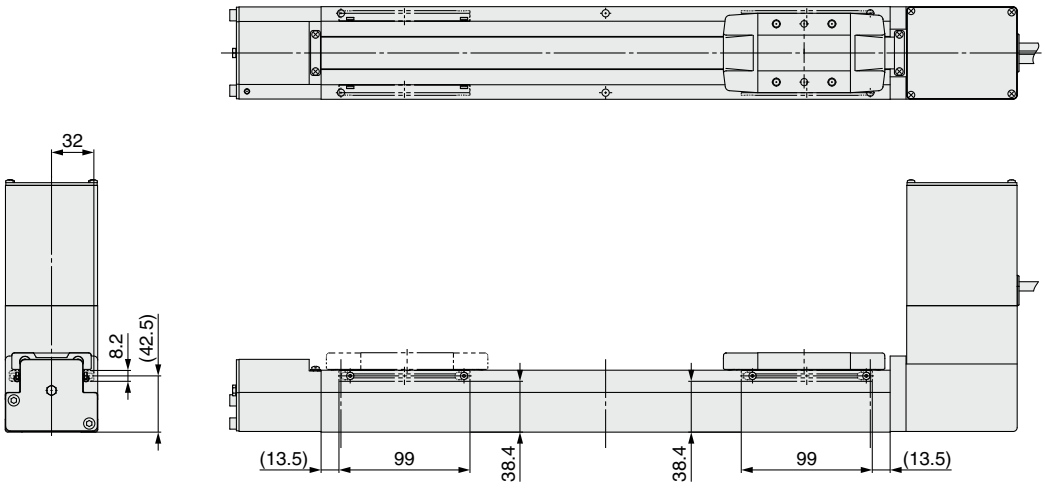

Dimensions [mm]

Stroke	G
300	380
400	380
500	580
600	580
700	780
800	780
900	980
1000	980
1100	1180
1200	1180
1300	1380
1400	1380
1500	1580
1600	1580
1700	1780
1800	1780
1900	1980
2000	1980
2500	2580

Dimensions: Belt Drive

LEFB32U/Motor bottom mounting type

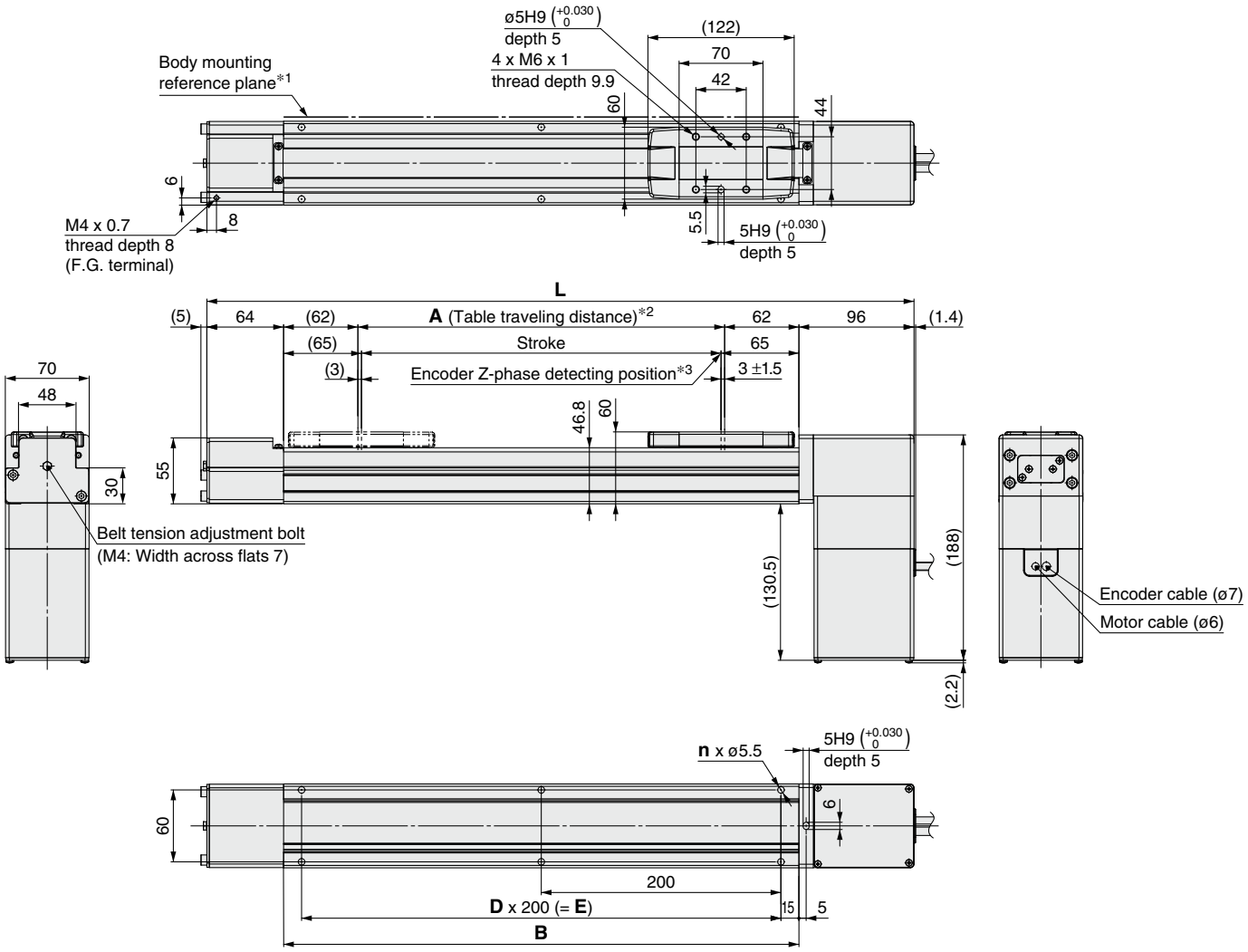

*1 When mounting the actuator using the body mounting reference plane, set the height of the opposite surface or pin to be 3 mm or more because of round chamfering. (Recommended height 5 mm)

*2 This is the distance within which the table can move when it returns to origin. Make sure workpieces mounted on the table do not interfere with the workpieces and facilities around the table.

*3 The Z-phase first detecting position from the stroke end of the motor side

Motor option: With lock

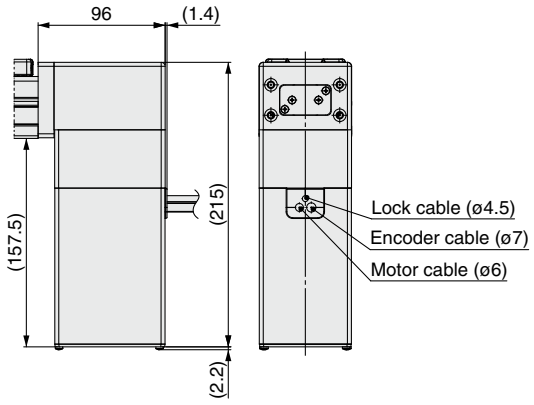

Dimensions [mm]

Stroke	L	A	B	n	D	E
300	590	306	430	6	2	400
400	690	406	530	6	2	400
500	790	506	630	8	3	600
600	890	606	730	8	3	600
700	990	706	830	10	4	800
800	1090	806	930	10	4	800
900	1190	906	1030	12	5	1000
1000	1290	1006	1130	12	5	1000
1100	1390	1106	1230	14	6	1200
1200	1490	1206	1330	14	6	1200
1300	1590	1306	1430	16	7	1400
1400	1690	1406	1530	16	7	1400
1500	1790	1506	1630	18	8	1600
1600	1890	1606	1730	18	8	1600
1700	1990	1706	1830	20	9	1800
1800	2090	1806	1930	20	9	1800
1900	2190	1906	2030	22	10	2000
2000	2290	2006	2130	22	10	2000
2500	2790	2506	2630	28	13	2600

Dimensions: Belt Drive

LEFB32U/Motor bottom mounting type

Positioning pin hole*1 (Option): Body bottom

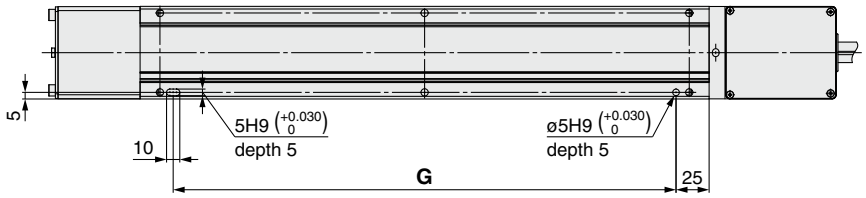

*1 When using the body bottom positioning pin holes, do not simultaneously use the housing B bottom pin hole.

With auto switch (Option)

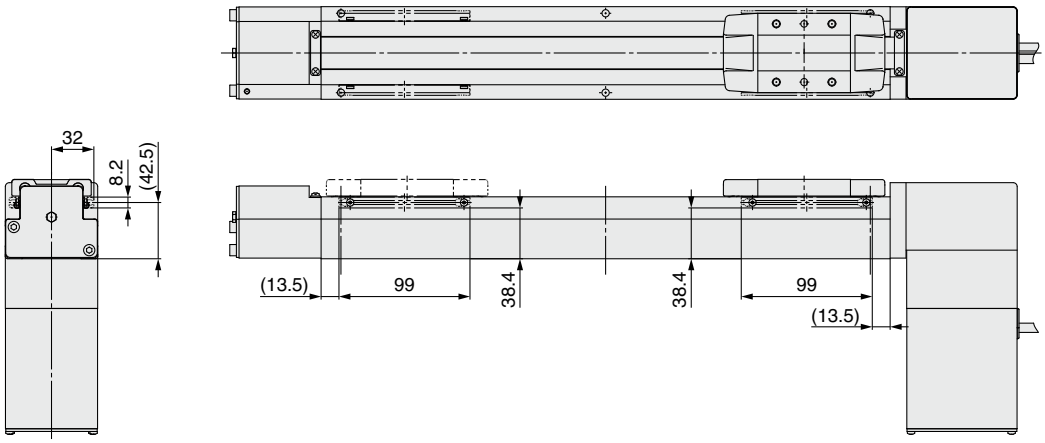

Dimensions [mm]

Stroke	G
300	380
400	380
500	580
600	580
700	780
800	780
900	980
1000	980
1100	1180
1200	1180
1300	1380
1400	1380
1500	1580
1600	1580
1700	1780
1800	1780
1900	1980
2000	1980
2500	2580

Dimensions: Belt Drive

LEFB40/Motor top mounting type

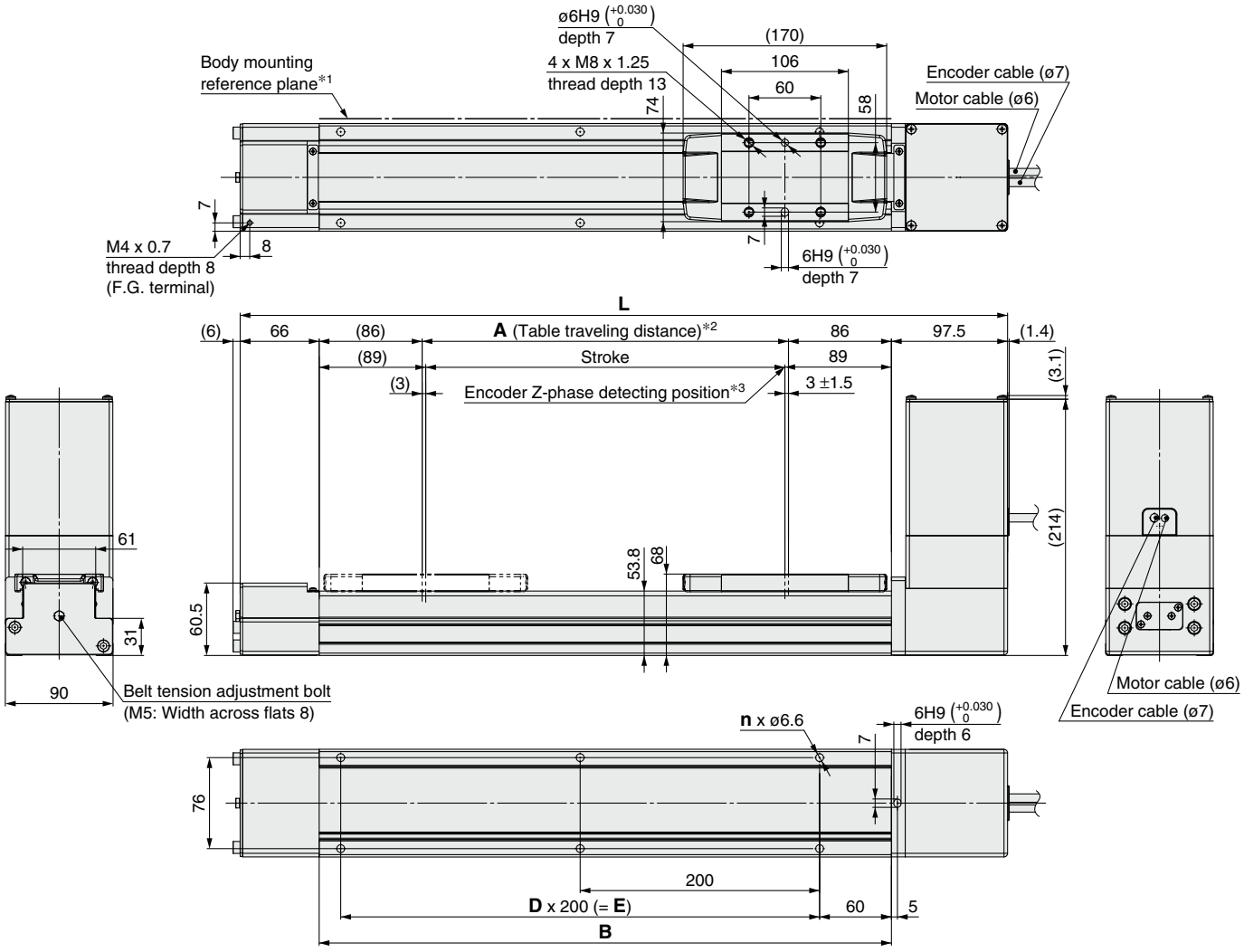

*1 When mounting the actuator using the body mounting reference plane, set the height of the opposite surface or pin to be 3 mm or more because of round chamfering. (Recommended height 5 mm)
*2 This is the distance within which the table can move when it returns to origin.
Make sure workpieces mounted on the table do not interfere with the workpieces and facilities around the table.
*3 The Z-phase first detecting position from the stroke end of the motor side

Motor option: With lock

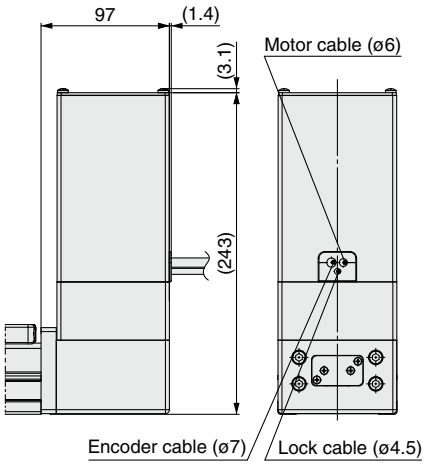

Dimensions

[mm]

Stroke	L	A	B	n	D	E
300	641.5	306	478	6	2	400
400	741.5	406	578	6	2	400
500	841.5	506	678	8	3	600
600	941.5	606	778	8	3	600
700	1041.5	706	878	10	4	800
800	1141.5	806	978	10	4	800
900	1241.5	906	1078	12	5	1000
1000	1341.5	1006	1178	12	5	1000
1100	1441.5	1106	1278	14	6	1200
1200	1541.5	1206	1378	14	6	1200
1300	1641.5	1306	1478	16	7	1400
1400	1741.5	1406	1578	16	7	1400
1500	1841.5	1506	1678	18	8	1600
1600	1941.5	1606	1778	18	8	1600
1700	2041.5	1706	1878	20	9	1800
1800	2141.5	1806	1978	20	9	1800
1900	2241.5	1906	2078	22	10	2000
2000	2341.5	2006	2178	22	10	2000
2500	2841.5	2506	2678	28	13	2600
3000	3341.5	3006	3178	32	15	3000

Dimensions: Belt Drive

LEFB40/Motor top mounting type

Positioning pin hole*1 (Option): Body bottom

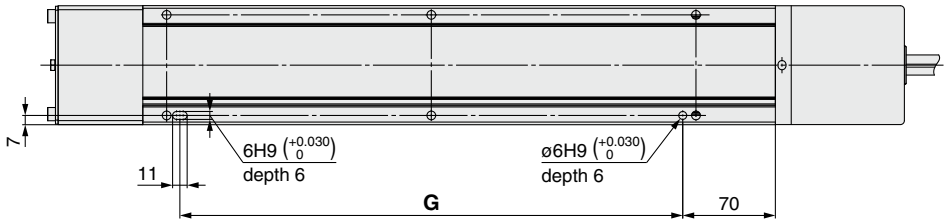

*1 When using the body bottom positioning pin holes, do not simultaneously use the housing B bottom pin hole.

With auto switch (Option)

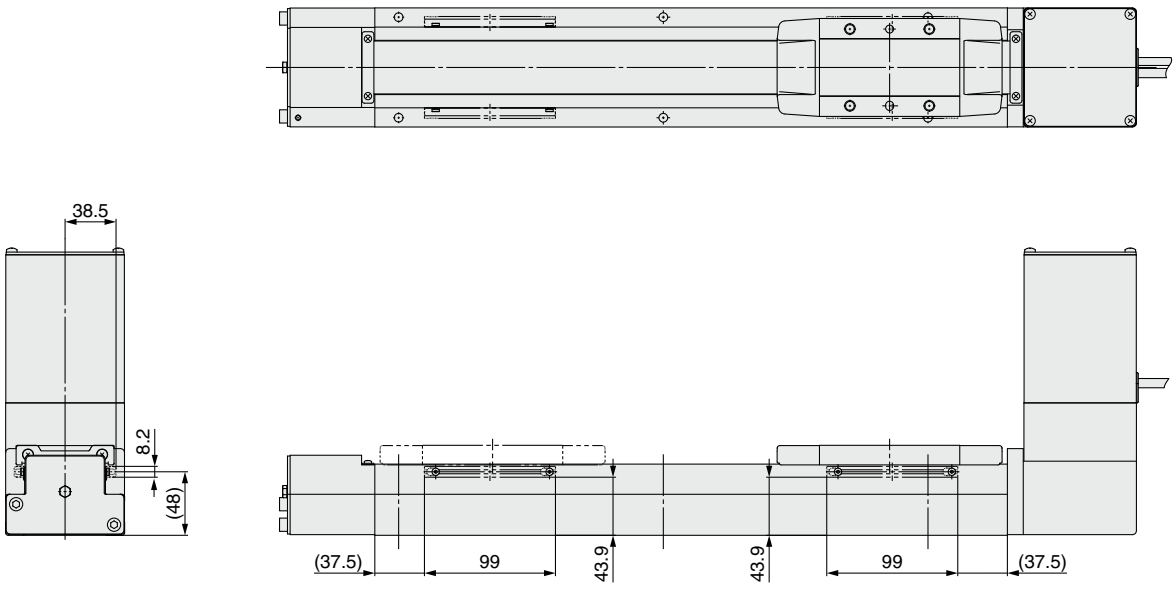

Dimensions [mm]

Stroke	G
300	380
400	380
500	580
600	580
700	780
800	780
900	980
1000	980
1100	1180
1200	1180
1300	1380
1400	1380
1500	1580
1600	1580
1700	1780
1800	1780
1900	1980
2000	1980
2500	2580
3000	2980

Dimensions: Belt Drive

LEFB40U/Motor bottom mounting type

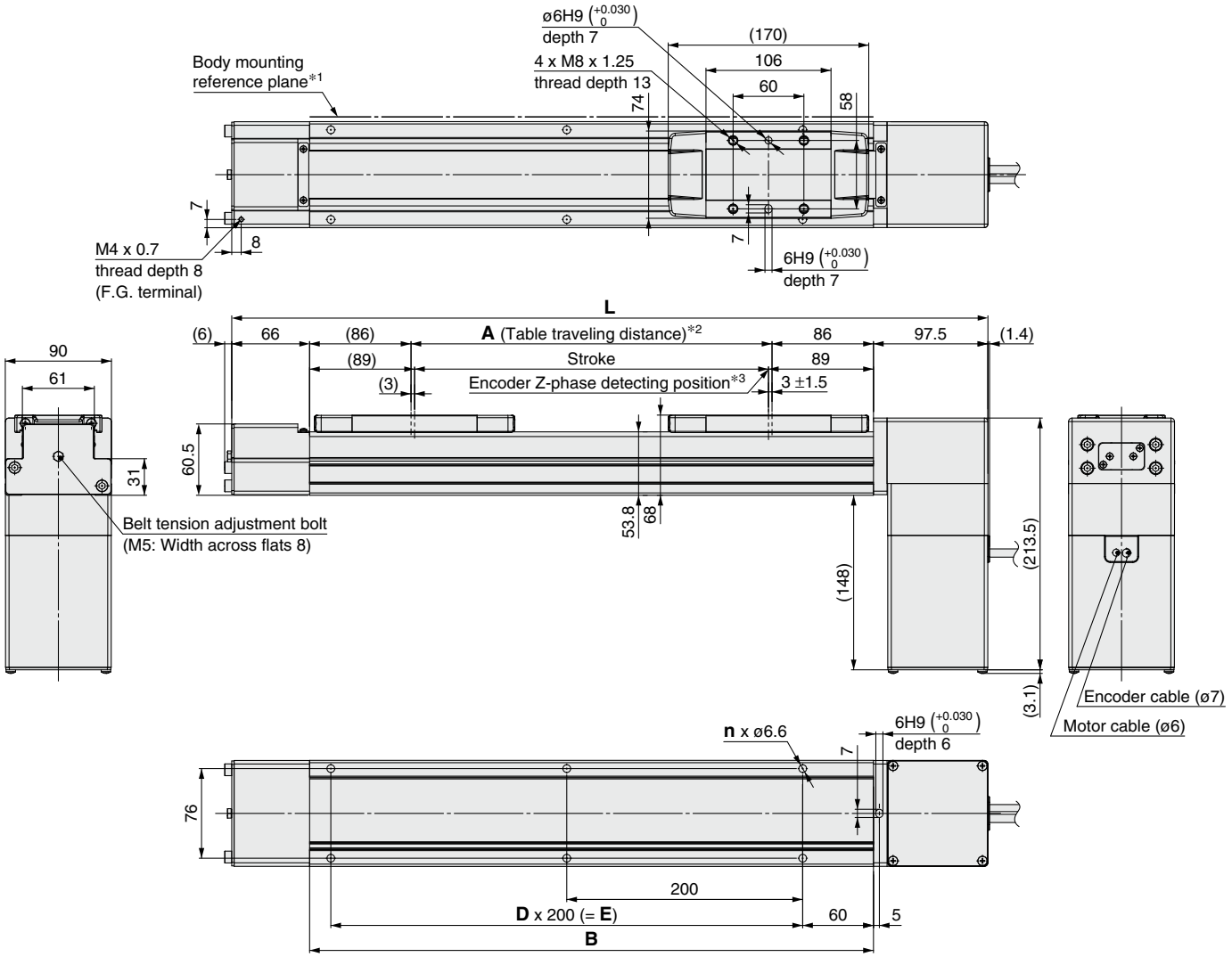

*1 When mounting the actuator using the body mounting reference plane, set the height of the opposite surface or pin to be 3 mm or more because of round chamfering. (Recommended height 5 mm)
*2 This is the distance within which the table can move when it returns to origin.
Make sure workpieces mounted on the table do not interfere with the workpieces and facilities around the table.
*3 The Z-phase first detecting position from the stroke end of the motor side

Motor option: With lock

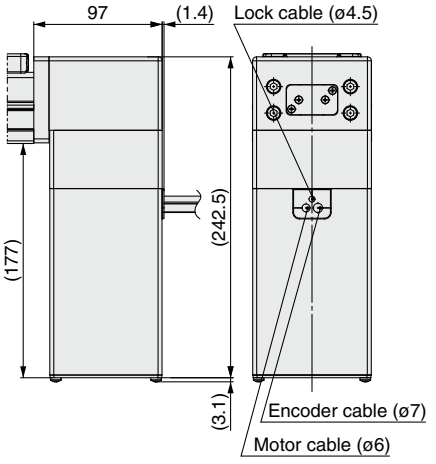

Dimensions

[mm]

Stroke	L	A	B	n	D	E
300	641.5	306	478	6	2	400
400	741.5	406	578	6	2	400
500	841.5	506	678	8	3	600
600	941.5	606	778	8	3	600
700	1041.5	706	878	10	4	800
800	1141.5	806	978	10	4	800
900	1241.5	906	1078	12	5	1000
1000	1341.5	1006	1178	12	5	1000
1100	1441.5	1106	1278	14	6	1200
1200	1541.5	1206	1378	14	6	1200
1300	1641.5	1306	1478	16	7	1400
1400	1741.5	1406	1578	16	7	1400
1500	1841.5	1506	1678	18	8	1600
1600	1941.5	1606	1778	18	8	1600
1700	2041.5	1706	1878	20	9	1800
1800	2141.5	1806	1978	20	9	1800
1900	2241.5	1906	2078	22	10	2000
2000	2341.5	2006	2178	22	10	2000
2500	2841.5	2506	2678	28	13	2600
3000	3341.5	3006	3178	32	15	3000

Dimensions: Belt Drive

LEFB40U/Motor bottom mounting type

Positioning pin hole*1 (Option): Body bottom

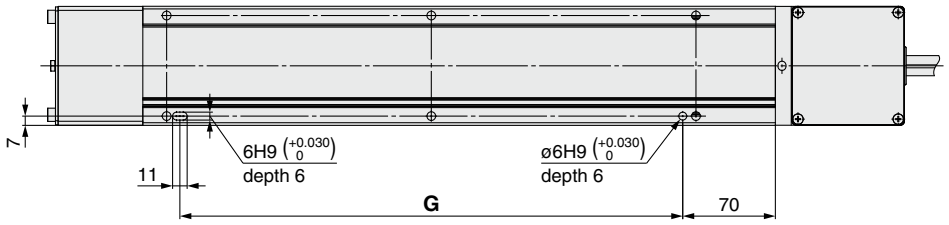

*1 When using the body bottom positioning pin holes, do not simultaneously use the housing B bottom pin hole.

With auto switch (Option)

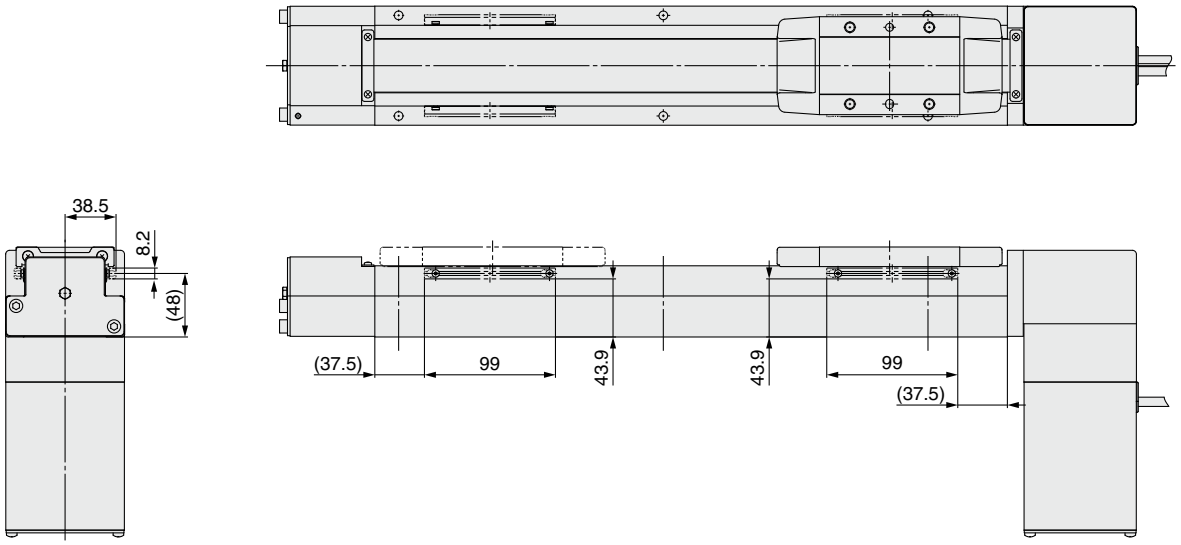

Dimensions [mm]

Stroke	G
300	380
400	380
500	580
600	580
700	780
800	780
900	980
1000	980
1100	1180
1200	1180
1300	1380
1400	1380
1500	1580
1600	1580
1700	1780
1800	1780
1900	1980
2000	1980
2500	2580
3000	2980

Electric Actuator/Slider Type Belt Drive

LEFB Series LEFB25, 32, 40

CE RoHS

Click here for details.

LECS□ Series ▶ p. 124 Motorless Type ▶ p. 851

How to Order

LEFB 32 ❶ ☐ ❷ V7 ❸ S ❹ – 300 ❺ B ❻ C ❼ K ❽ – S ❾ 3 ❿ M2 ⓫ ☐ ⓬

❶ Size

25
32
40

❷ Motor mounting position

Nil	Top mounting
U	Bottom mounting

❸ Motor type

Symbol	Type	Output [W]	Size	Compatible drivers
V6*1	AC servo motor (Absolute encoder)	100	25	LECYM2-V5/LECYU2-V5
V7		200	32	LECYM2-V7/LECYU2-V7
V8		400	40	LECYM2-V8/LECYU2-V8

*1 For motor type V6, the compatible driver part number suffix is V5.

❹ Equivalent lead [mm]

S	54

❺ Stroke [mm]

300	300
to	to
3000	3000

❻ Motor option

Nil	Without option
B	With lock

❼ Auto switch compatibility

Nil	None
C	With (Includes 1 mounting bracket)

* If 2 or more are required, please order them separately. (Part no.: LEF-D-2-1 For details, refer to page 161.)
* Order auto switches separately. (For details, refer to pages 162 to 164.)
* When "Nil" is selected, the product will not come with a built-in magnet for an auto switch, and so a mounting bracket cannot be secured. Be sure to select an appropriate model initially as the product cannot be changed to have auto switch compatibility after purchase.

❽ Positioning pin hole

Nil	Housing B bottom*1	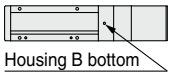 Housing B bottom
K	Body bottom 2 locations	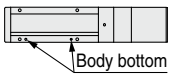 Body bottom

*1 Refer to the body mounting example on page 166 for the mounting method.

❾ Cable type

Nil	Without cable
S	Standard cable
R	Robotic cable (Flexible cable)

❿ Actuator cable length [m]

Nil	Without cable
3	3
5	5
A	10
C	20

⓫ Driver type

	Compatible drivers	Power supply voltage [V]
Nil	Without driver	—
M2	LECYM2-V□	200 to 230
U2	LECYU2-V□	200 to 230

⓬ I/O cable length [m]*1

Nil	Without cable
H	Without cable (Connector only)
1	1.5

*1 When "Without driver" is selected for driver type, only "Nil: Without cable" can be selected.
Refer to page 808 if I/O cable is required. (Options are shown on page 808.)

Applicable Stroke Table

●: Standard/○: Produced upon receipt of order

	300	400	500	600	700	800	900	1000	1100	1200	1300	1400	1500	1600	1700	1800	1900	2000	2500	3000	Manufacturable stroke range [mm]
LEFB25	●	●	●	●	●	●	●	●	○	●	○	○	●	○	○	○	○	●	—	—	300 to 2000
LEFB32	●	●	●	●	●	●	●	●	○	●	○	○	●	○	○	○	○	●	●	—	300 to 2500
LEFB40	●	●	●	●	●	●	●	●	○	●	○	○	●	○	○	○	○	●	●	●	300 to 3000

* Please consult with SMC for non-standard strokes as they are produced as special orders.

For auto switches, refer to pages 161 to 164.

Compatible Drivers

Driver type	MECHATROLINK-Ⅱ type	MECHATROLINK-Ⅲ type
		
Series	LECYM	LECYU
Applicable network	MECHATROLINK-Ⅱ	MECHATROLINK-Ⅲ
Control encoder	Absolute 20-bit encoder	
Communication device	USB communication, RS-422 communication	
Power supply voltage [V]	200 to 230 VAC (50/60 Hz)	
Reference page	801	

Specifications

AC Servo Motor

Model			LEFB25V6	LEFB32V7	LEFB40V8
Actuator specifications	Stroke [mm]*1		300, 400, 500 600, 700, 800 900, 1000, (1100) 1200, (1300, 1400) 1500, (1600, 1700) (1800, 1900), 2000	300, 400, 500 600, 700, 800 900, 1000, (1100) 1200, (1300, 1400) 1500, (1600, 1700) (1800, 1900), 2000 2500	300, 400, 500 600, 700, 800 900, 1000, (1100) 1200, (1300, 1400) 1500, (1600, 1700) (1800, 1900), 2000 2500, 3000
	Work load [kg]*2	Horizontal	5	15	25
	Max. speed [mm/s]		2000	2000	2000
	Max. acceleration/deceleration [mm/s²]		20000 (Refer to page 50 for limit according to work load and duty ratio.)*3		
	Positioning repeatability [mm]		±0.06		
	Lost motion [mm]*4		0.1 or less		
	Equivalent lead [mm]		54		
	Impact/Vibration resistance [m/s²]*5		50/20		
	Actuation type		Belt		
	Guide type		Linear guide		
	Static allowable moment*6 [N·m]	Mep (Pitching)	27	46	110
		Mey (Yawing)	27	46	110
		Mer (Rolling)	52	101	207
	Operating temperature range [°C]		5 to 40		
	Operating humidity range [%RH]		90 or less (No condensation)		
Electric specifications	Motor output/Size		100 W/□40	200 W/□60	400 W/□60
	Motor type		AC servo motor (200 VAC)		
	Encoder		Absolute 20-bit encoder (Resolution: 1048576 p/rev)		
	Power [W]*7		Max. power 445	Max. power 725	Max. power 1275
Lock unit specifications	Type*8		Non-magnetizing lock		
	Holding force [N]		27	54	110
	Power consumption at 20°C [W]		5.5	6.0	6.0
	Rated voltage [V]		24 VDC $^{+10\%}_{0}$		

*1 Please consult with SMC for non-standard strokes as they are produced as special orders.
*2 For details, refer to the "Speed–Work Load Graph (Guide)" on page 50.
*3 Maximum acceleration/deceleration changes according to the work load. Check the "Work Load–Acceleration/Deceleration Graph (Guide)" of the catalog.
*4 A reference value for correcting an error in reciprocal operation
*5 Impact resistance: No malfunction occurred when the actuator was tested with a drop tester in both an axial direction and a perpendicular direction to the lead screw. (The test was performed with the actuator in the initial state.)
Vibration resistance: No malfunction occurred in a test ranging between 45 to 2000 Hz. The test was performed in both an axial direction and a perpendicular direction to the lead screw. (The test was performed with the actuator in the initial state.)
*6 The static allowable moment is the amount of static moment which can be applied to the actuator when it is stopped.
If the product is exposed to impact or repeated load, be sure to take adequate safety measures when using the product.
*7 Indicates the max. power during operation (including the driver)
When selecting the power supply capacity, refer to the power supply capacity in the operation manual of each driver.
*8 Only when motor option "With lock" is selected

Weight

Series	LEFB25																	
Stroke [mm]	300	400	500	600	700	800	900	1000	1100	1200	1300	1400	1500	1600	1700	1800	1900	2000
Product weight [kg]	3.06	3.31	3.56	3.81	4.06	4.31	4.56	4.81	5.06	5.31	5.56	5.81	6.06	6.31	6.56	6.81	7.06	7.31
Additional weight with lock [kg]	0.3																	

Series	LEFB32																		
Stroke [mm]	300	400	500	600	700	800	900	1000	1100	1200	1300	1400	1500	1600	1700	1800	1900	2000	2500
Product weight [kg]	4.90	5.25	5.60	5.95	6.30	6.65	7.00	7.35	7.70	8.05	8.40	8.75	9.10	9.45	9.80	10.15	10.50	10.85	12.60
Additional weight with lock [kg]	0.7																		

Series	LEFB40																			
Stroke [mm]	300	400	500	600	700	800	900	1000	1100	1200	1300	1400	1500	1600	1700	1800	1900	2000	2500	3000
Product weight [kg]	7.22	7.67	8.12	8.57	9.02	9.47	9.92	10.37	10.82	11.27	11.72	12.17	12.62	13.07	13.52	13.97	14.42	14.82	17.12	19.37
Additional weight with lock [kg]	0.7																			

Construction

LEFB25V6S

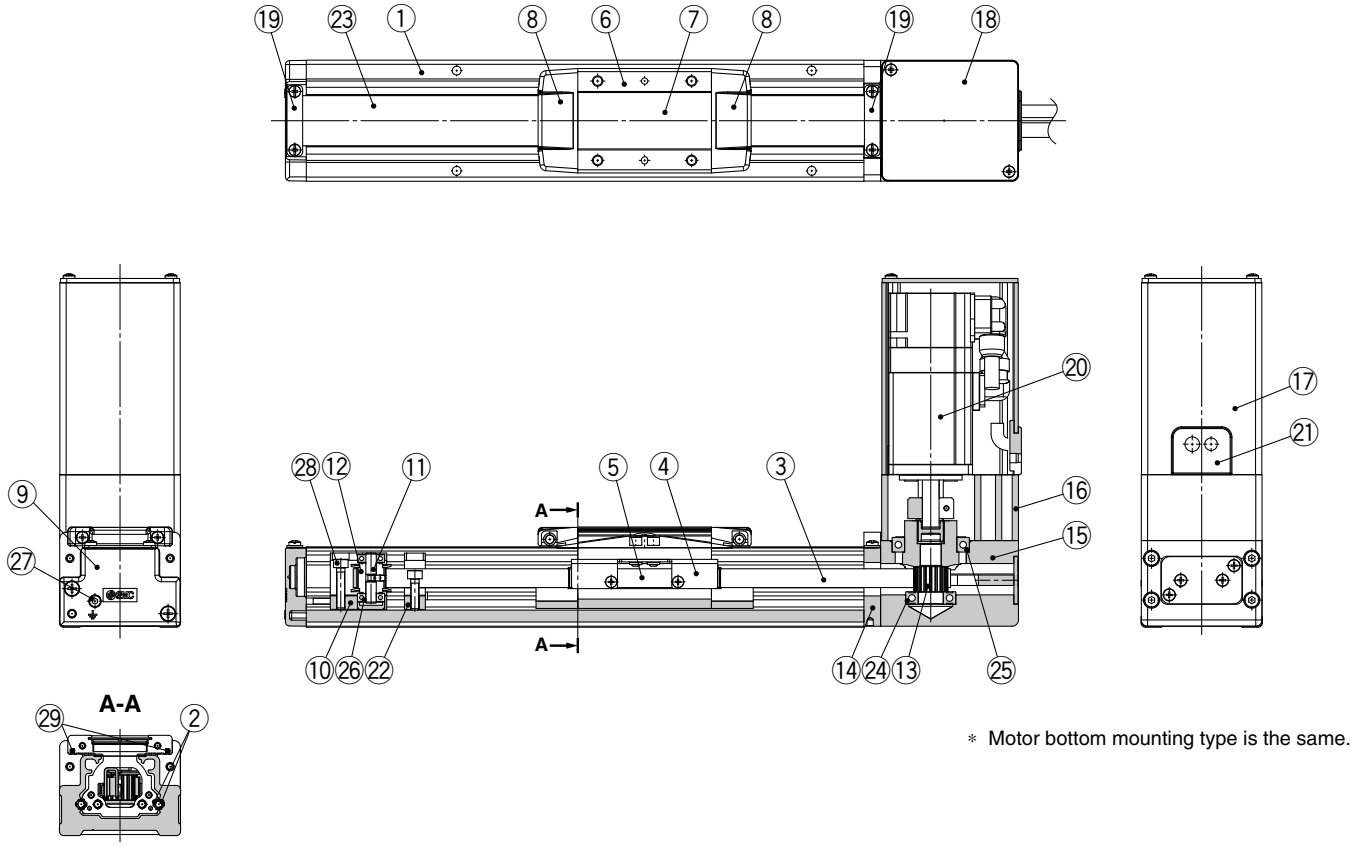

∗ Motor bottom mounting type is the same.

Component Parts

No.	Description	Material	Note
1	**Body**	Aluminum alloy	Anodized
2	**Rail guide**		
3	**Belt**		
4	**Belt holder**	Carbon steel	Chromating
5	**Belt stopper**	Aluminum alloy	
6	**Table**	Aluminum alloy	Anodized
7	**Blanking plate**	Aluminum alloy	Anodized
8	**Seal band holder**	Synthetic resin	
9	**Housing A**	Aluminum die-cast	Coating
10	**Pulley holder**	Aluminum alloy	
11	**Pulley shaft**	Stainless steel	
12	**End pulley**	Aluminum alloy	Anodized
13	**Motor pulley**	Aluminum alloy	Anodized
14	**Return flange**	Aluminum alloy	Coating
15	**Housing**	Aluminum alloy	Coating

No.	Description	Material	Note
16	**Motor mount**	Aluminum alloy	Coating
17	**Motor cover**	Aluminum alloy	Anodized
18	**Motor end cover**	Aluminum alloy	Anodized
19	**Band stopper**	Stainless steel	
20	**Motor**		
21	**Rubber bushing**	NBR	
22	**Stopper**	Aluminum alloy	
23	**Dust seal band**	Stainless steel	
24	**Bearing**		
25	**Bearing**		
26	**Spacer**	Aluminum alloy	
27	**Tension adjustment cap screw**	Chromium molybdenum steel	Chromating
28	**Pulley retaining screw**	Chromium molybdenum steel	Chromating
29	**Magnet**	—	With auto switch compatibility

Construction

LEFB32/40V□S

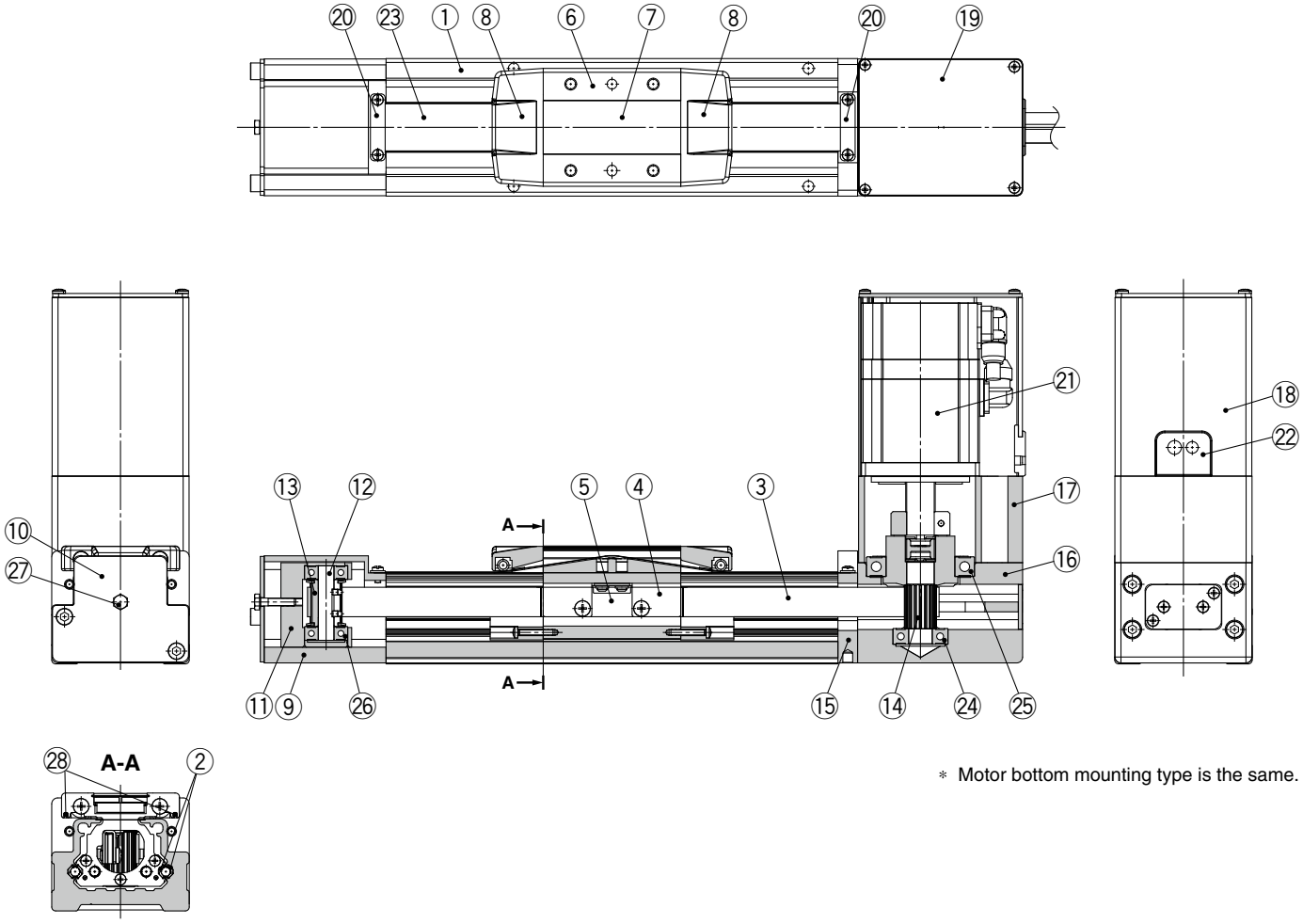

∗ Motor bottom mounting type is the same.

Component Parts

No.	Description	Material	Note
1	**Body**	Aluminum alloy	Anodized
2	**Rail guide**		
3	**Belt**		
4	**Belt holder**	Carbon steel	Chromating
5	**Belt stopper**	Aluminum alloy	
6	**Table**	Aluminum alloy	Anodized
7	**Blanking plate**	Aluminum alloy	Anodized
8	**Seal band stopper**	Synthetic resin	
9	**End block**	Aluminum alloy	Coating
10	**End block cover**		
11	**Pulley holder**	Aluminum alloy	
12	**Pulley shaft**	Stainless steel	
13	**End pulley**	Aluminum alloy	Anodized
14	**Motor pulley**	Aluminum alloy	Anodized

No.	Description	Material	Note
15	**Return flange**	Aluminum alloy	Coating
16	**Housing**	Aluminum alloy	Coating
17	**Motor mount**	Aluminum alloy	Coating
18	**Motor cover**	Aluminum alloy	Anodized
19	**Motor end cover**	Aluminum alloy	Anodized
20	**Band stopper**	Stainless steel	
21	**Motor**		
22	**Rubber bushing**	NBR	
23	**Dust seal band**	Stainless steel	
24	**Bearing**		
25	**Bearing**		
26	**Bearing**		
27	**Tension adjustment bolt**	Chromium molybdenum steel	Chromating
28	**Magnet**	—	With auto switch compatibility

Dimensions: Belt Drive

LEFB25/Motor top mounting type

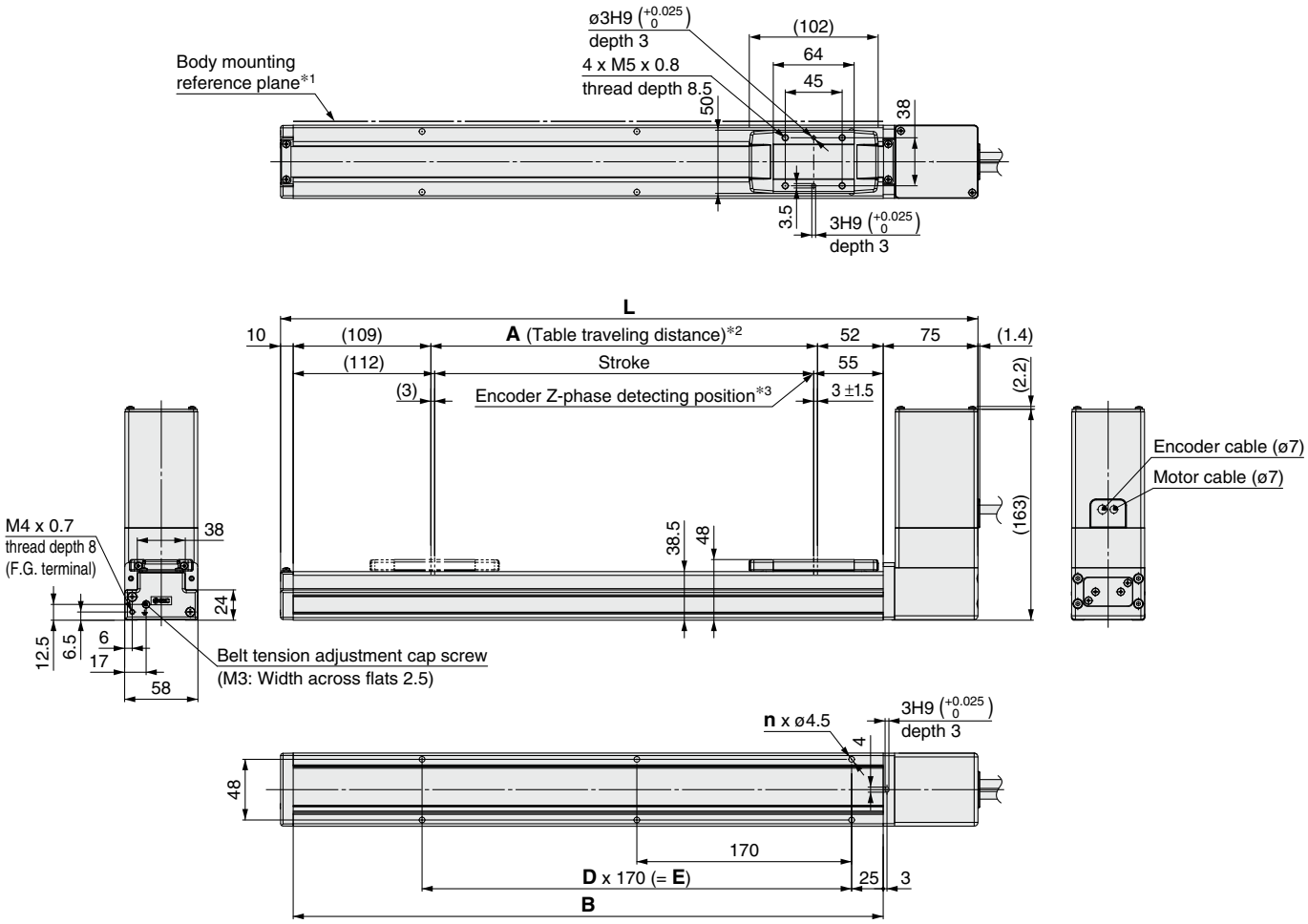

*1 When mounting the actuator using the body mounting reference plane, set the height of the opposite surface or pin to be 3 mm or more because of round chamfering. (Recommended height 5 mm)
*2 This is the distance within which the table can move when it returns to origin. Make sure workpieces mounted on the table do not interfere with the workpieces and facilities around the table.
*3 The Z-phase first detecting position from the stroke end of the motor side

Motor option: With lock

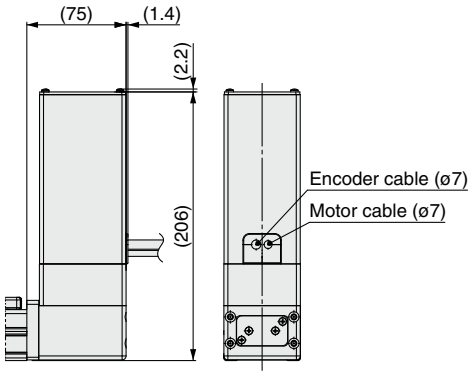

Dimensions [mm]

Stroke	L	A	B	n	D	E
300	552	306	467	6	2	340
400	652	406	567	8	3	510
500	752	506	667	8	3	510
600	852	606	767	10	4	680
700	952	706	867	10	4	680
800	1052	806	967	12	5	850
900	1152	906	1067	14	6	1020
1000	1252	1006	1167	14	6	1020
1100	1352	1106	1267	16	7	1190
1200	1452	1206	1367	16	7	1190
1300	1552	1306	1467	18	8	1360
1400	1652	1406	1567	20	9	1530
1500	1752	1506	1667	20	9	1530
1600	1852	1606	1767	22	10	1700
1700	1952	1706	1867	22	10	1700
1800	2052	1806	1967	24	11	1870
1900	2152	1906	2067	24	11	1870
2000	2252	2006	2167	26	12	2040

Dimensions: Belt Drive

LEFB25/Motor top mounting type

Positioning pin hole*1 (Option): Body bottom

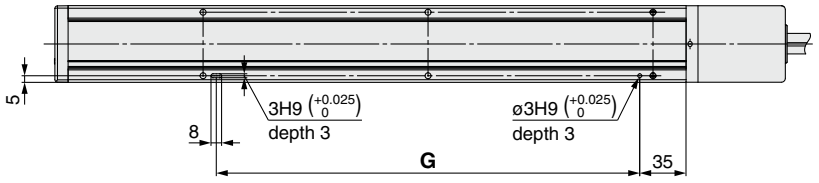

*1 When using the body bottom positioning pin holes, do not simultaneously use the housing B bottom pin hole.

With auto switch (Option)

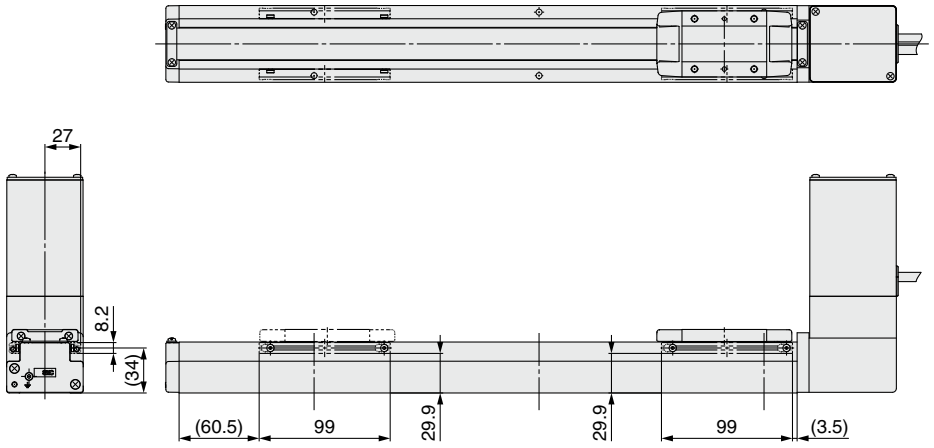

Dimensions [mm]

Stroke	G
300	320
400	490
500	490
600	660
700	660
800	830
900	1000
1000	1000
1100	1170
1200	1170
1300	1340
1400	1510
1500	1510
1600	1680
1700	1680
1800	1850
1900	1850
2000	2020

Dimensions: Belt Drive

LEFB25U/Motor bottom mounting type

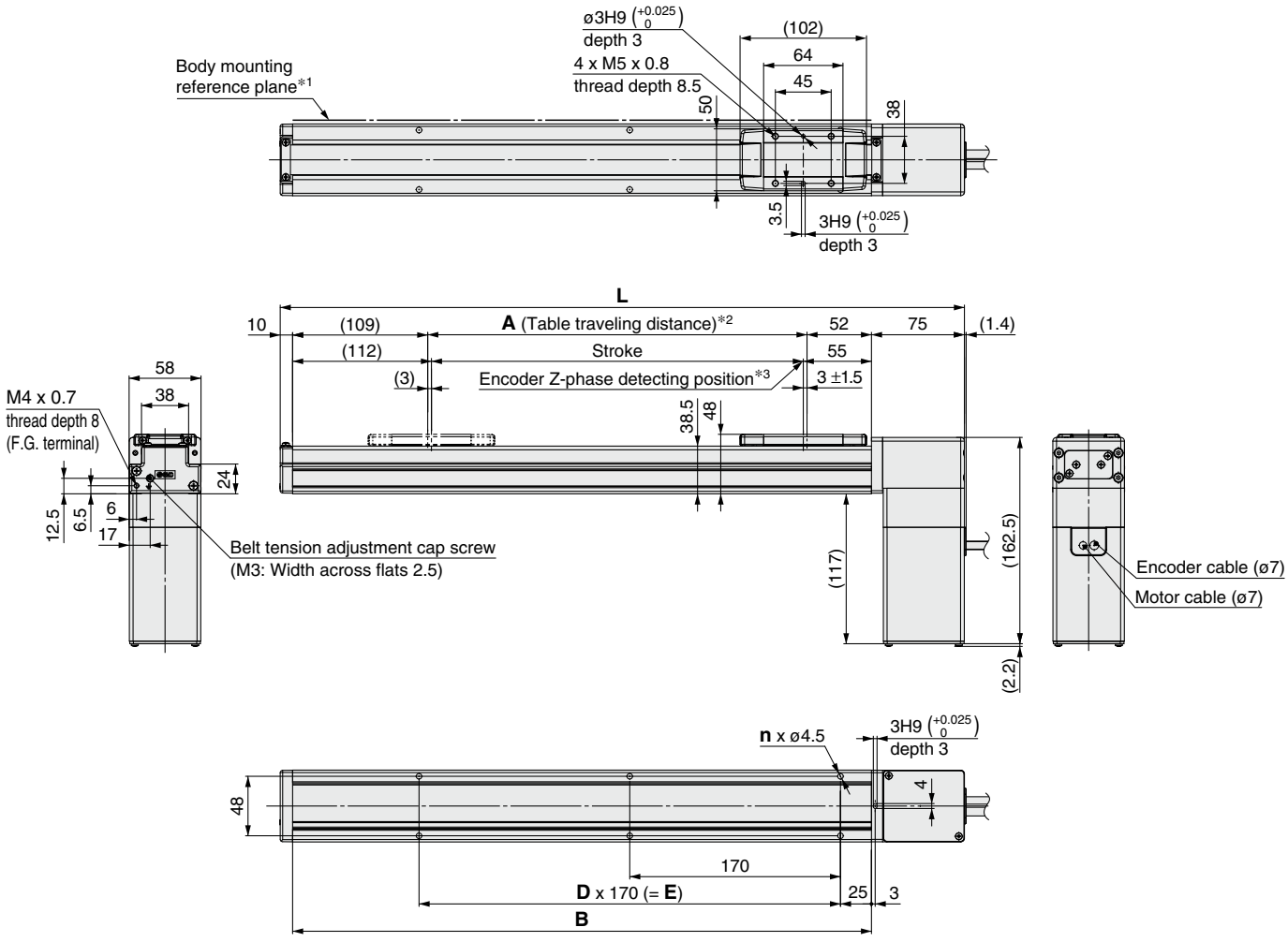

*1 When mounting the actuator using the body mounting reference plane, set the height of the opposite surface or pin to be 3 mm or more because of round chamfering. (Recommended height 5 mm)

*2 This is the distance within which the table can move when it returns to origin. Make sure workpieces mounted on the table do not interfere with the workpieces and facilities around the table.

*3 The Z-phase first detecting position from the stroke end of the motor side

Motor option: With lock

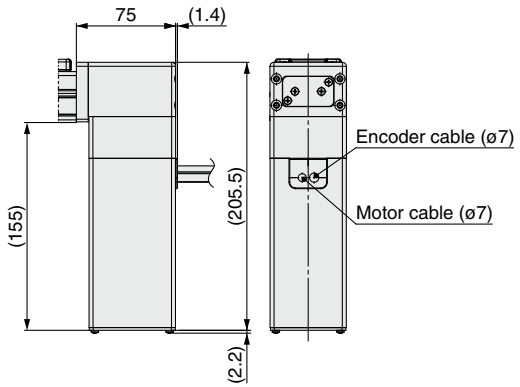

Dimensions [mm]

Stroke	L	A	B	n	D	E
300	552	306	467	6	2	340
400	652	406	567	8	3	510
500	752	506	667	8	3	510
600	852	606	767	10	4	680
700	952	706	867	10	4	680
800	1052	806	967	12	5	850
900	1152	906	1067	14	6	1020
1000	1252	1006	1167	14	6	1020
1100	1352	1106	1267	16	7	1190
1200	1452	1206	1367	16	7	1190
1300	1552	1306	1467	18	8	1360
1400	1652	1406	1567	20	9	1530
1500	1752	1506	1667	20	9	1530
1600	1852	1606	1767	22	10	1700
1700	1952	1706	1867	22	10	1700
1800	2052	1806	1967	24	11	1870
1900	2152	1906	2067	24	11	1870
2000	2252	2006	2167	26	12	2040

Dimensions: Belt Drive

LEFB25U/Motor bottom mounting type

Positioning pin hole*1 (Option): Body bottom

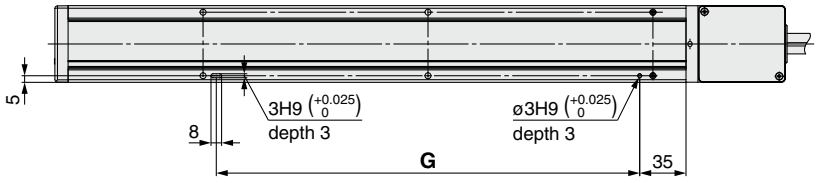

*1 When using the body bottom positioning pin holes, do not simultaneously use the housing B bottom pin hole.

With auto switch (Option)

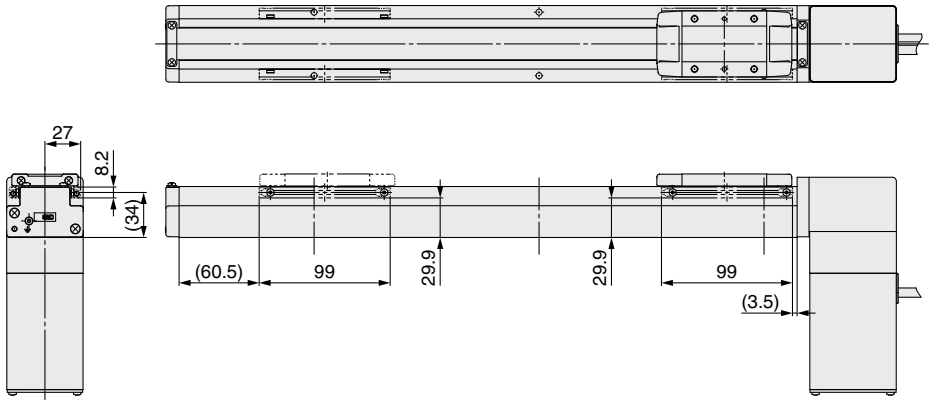

Dimensions [mm]

Stroke	G
300	320
400	490
500	490
600	660
700	660
800	830
900	1000
1000	1000
1100	1170
1200	1170
1300	1340
1400	1510
1500	1510
1600	1680
1700	1680
1800	1850
1900	1850
2000	2020

Dimensions: Belt Drive

LEFB32/Motor top mounting type

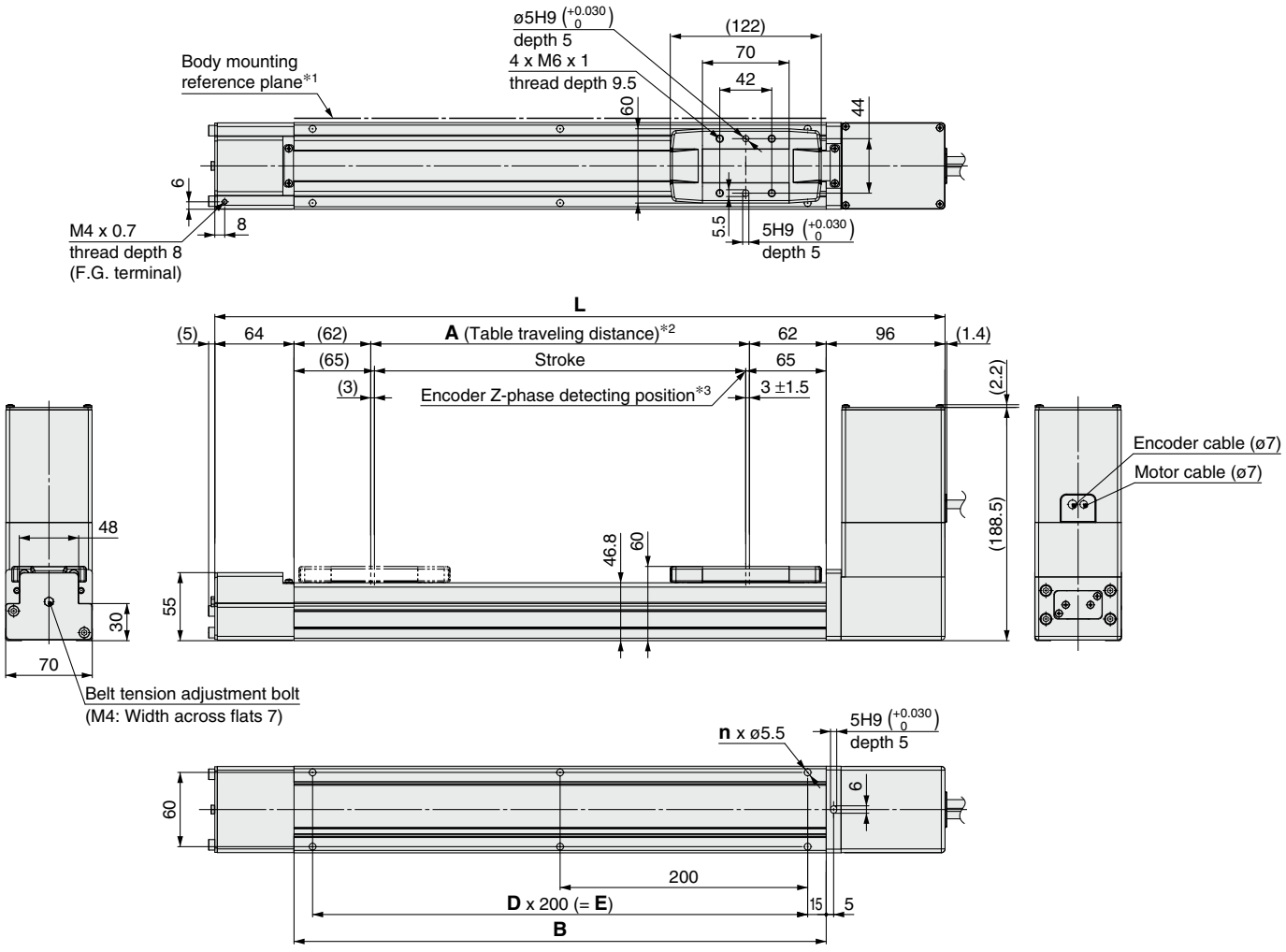

*1 When mounting the actuator using the body mounting reference plane, set the height of the opposite surface or pin to be 3 mm or more because of round chamfering. (Recommended height 5 mm)

*2 This is the distance within which the table can move when it returns to origin. Make sure workpieces mounted on the table do not interfere with the workpieces and facilities around the table.

*3 The Z-phase first detecting position from the stroke end of the motor side

Motor option: With lock

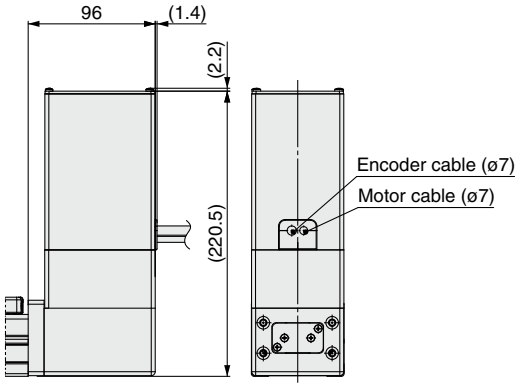

Dimensions [mm]

Stroke	L	A	B	n	D	E
300	590	306	430	6	2	400
400	690	406	530	6	2	400
500	790	506	630	8	3	600
600	890	606	730	8	3	600
700	990	706	830	10	4	800
800	1090	806	930	10	4	800
900	1190	906	1030	12	5	1000
1000	1290	1006	1130	12	5	1000
1100	1390	1106	1230	14	6	1200
1200	1490	1206	1330	14	6	1200
1300	1590	1306	1430	16	7	1400
1400	1690	1406	1530	16	7	1400
1500	1790	1506	1630	18	8	1600
1600	1890	1606	1730	18	8	1600
1700	1990	1706	1830	20	9	1800
1800	2090	1806	1930	20	9	1800
1900	2190	1906	2030	22	10	2000
2000	2290	2006	2130	22	10	2000
2500	2790	2506	2630	28	13	2600

Dimensions: Belt Drive

LEFB32/Motor top mounting type

Positioning pin hole*1 (Option): Body bottom

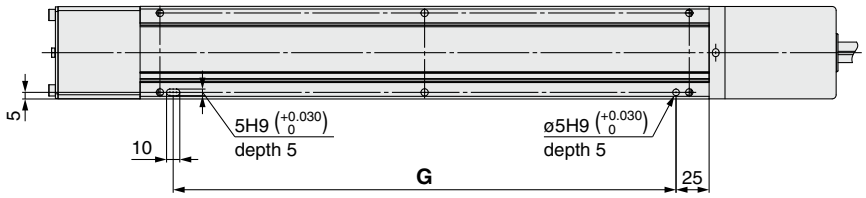

*1 When using the body bottom positioning pin holes, do not simultaneously use the housing B bottom pin hole.

With auto switch (Option)

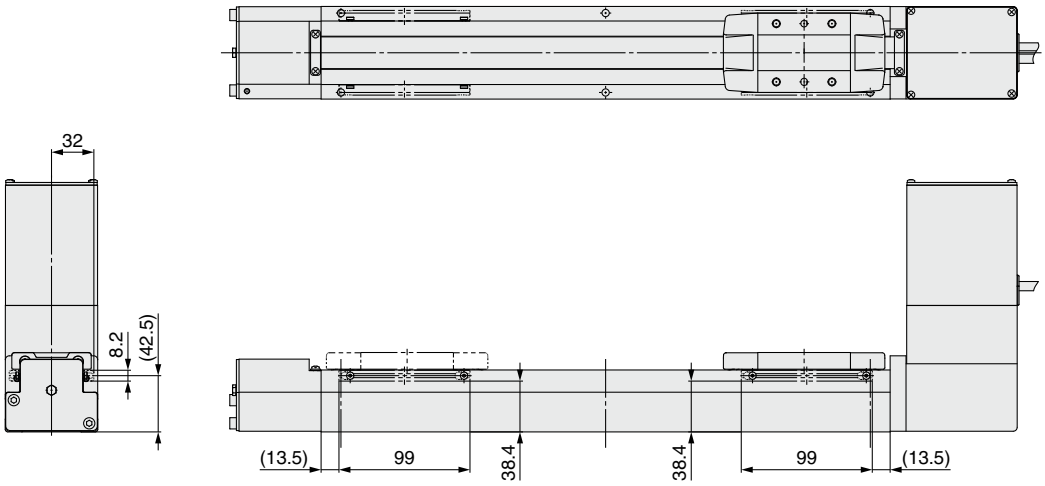

Dimensions [mm]

Stroke	G
300	380
400	380
500	580
600	580
700	780
800	780
900	980
1000	980
1100	1180
1200	1180
1300	1380
1400	1380
1500	1580
1600	1580
1700	1780
1800	1780
1900	1980
2000	1980
2500	2580

Dimensions: Belt Drive

LEFB32U/Motor bottom mounting type

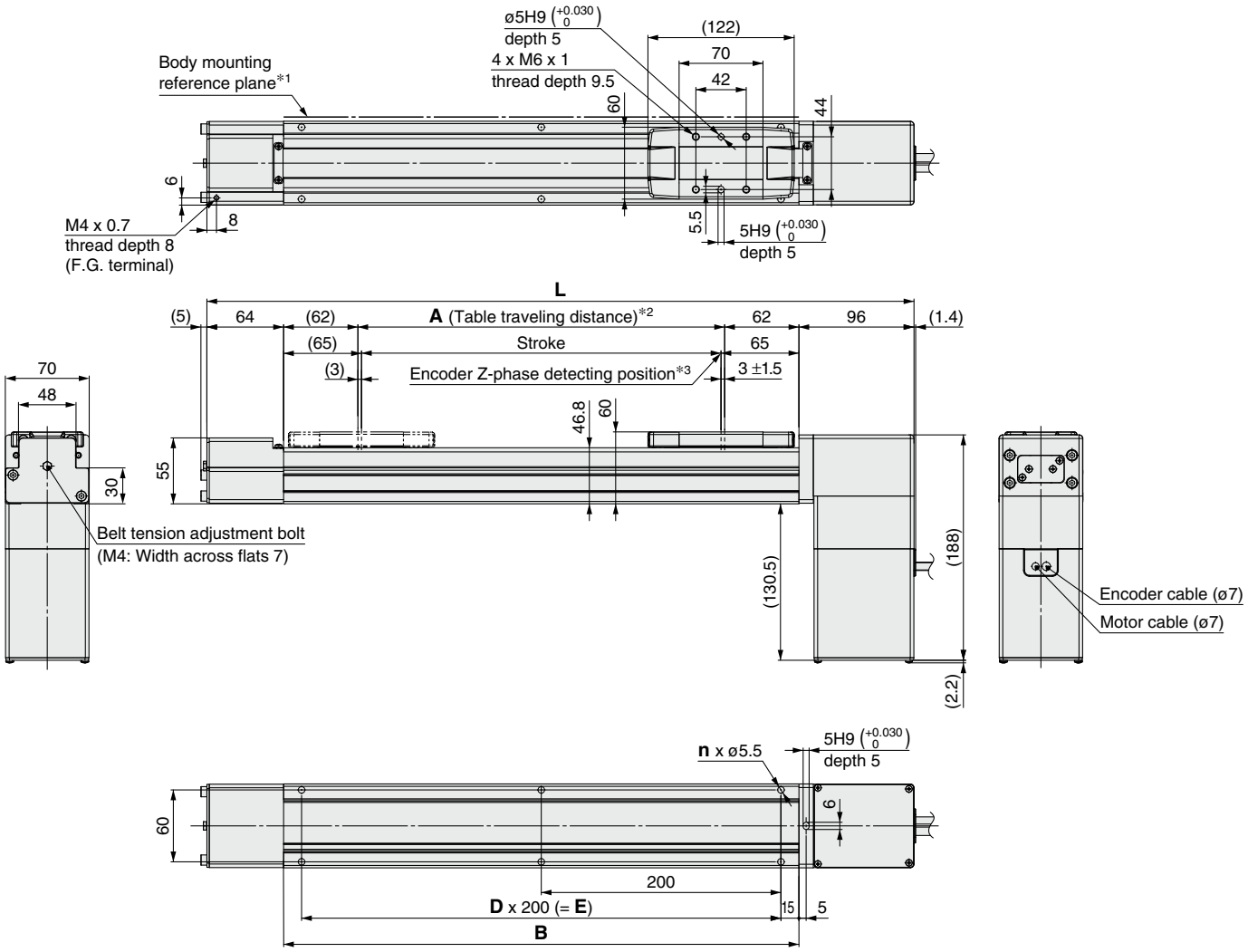

*1 When mounting the actuator using the body mounting reference plane, set the height of the opposite surface or pin to be 3 mm or more because of round chamfering. (Recommended height 5 mm)

*2 This is the distance within which the table can move when it returns to origin. Make sure workpieces mounted on the table do not interfere with the workpieces and facilities around the table.

*3 The Z-phase first detecting position from the stroke end of the motor side

Motor option: With lock

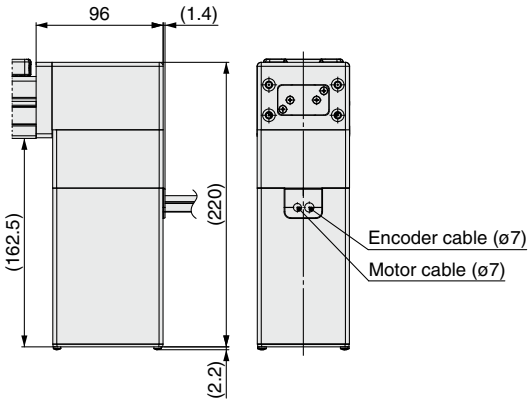

Dimensions [mm]

Stroke	L	A	B	n	D	E
300	590	306	430	6	2	400
400	690	406	530	6	2	400
500	790	506	630	8	3	600
600	890	606	730	8	3	600
700	990	706	830	10	4	800
800	1090	806	930	10	4	800
900	1190	906	1030	12	5	1000
1000	1290	1006	1130	12	5	1000
1100	1390	1106	1230	14	6	1200
1200	1490	1206	1330	14	6	1200
1300	1590	1306	1430	16	7	1400
1400	1690	1406	1530	16	7	1400
1500	1790	1506	1630	18	8	1600
1600	1890	1606	1730	18	8	1600
1700	1990	1706	1830	20	9	1800
1800	2090	1806	1930	20	9	1800
1900	2190	1906	2030	22	10	2000
2000	2290	2006	2130	22	10	2000
2500	2790	2506	2630	28	13	2600

Dimensions: Belt Drive

LEFB32U/Motor bottom mounting type

Positioning pin hole ∗1 (Option): Body bottom

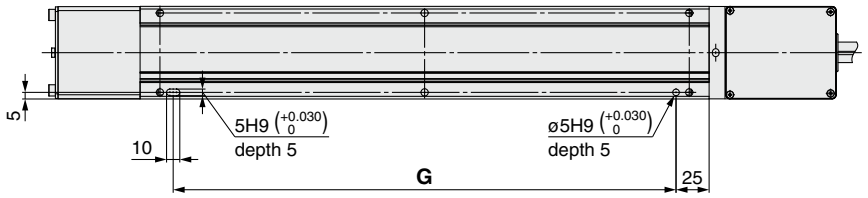

∗1 When using the body bottom positioning pin holes, do not simultaneously use the housing B bottom pin hole.

With auto switch (Option)

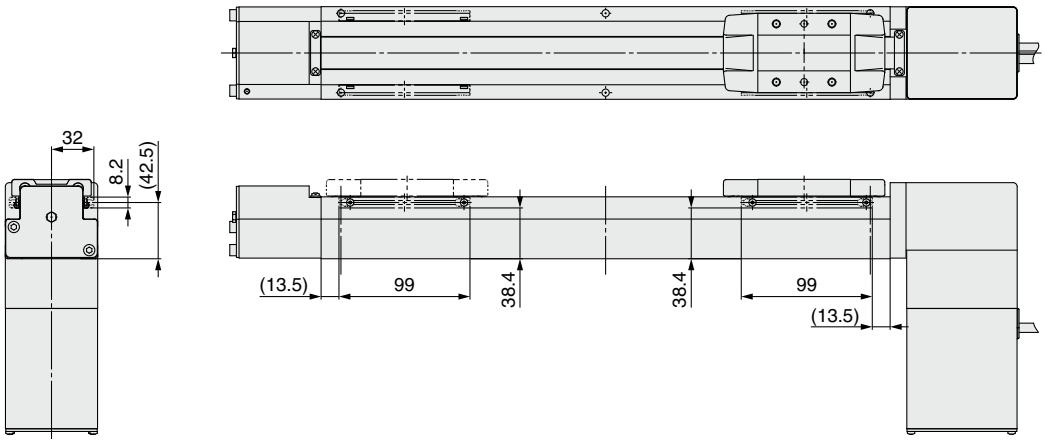

Dimensions [mm]

Stroke	G
300	380
400	380
500	580
600	580
700	780
800	780
900	980
1000	980
1100	1180
1200	1180
1300	1380
1400	1380
1500	1580
1600	1580
1700	1780
1800	1780
1900	1980
2000	1980
2500	2580

Dimensions: Belt Drive

LEFB40/Motor top mounting type

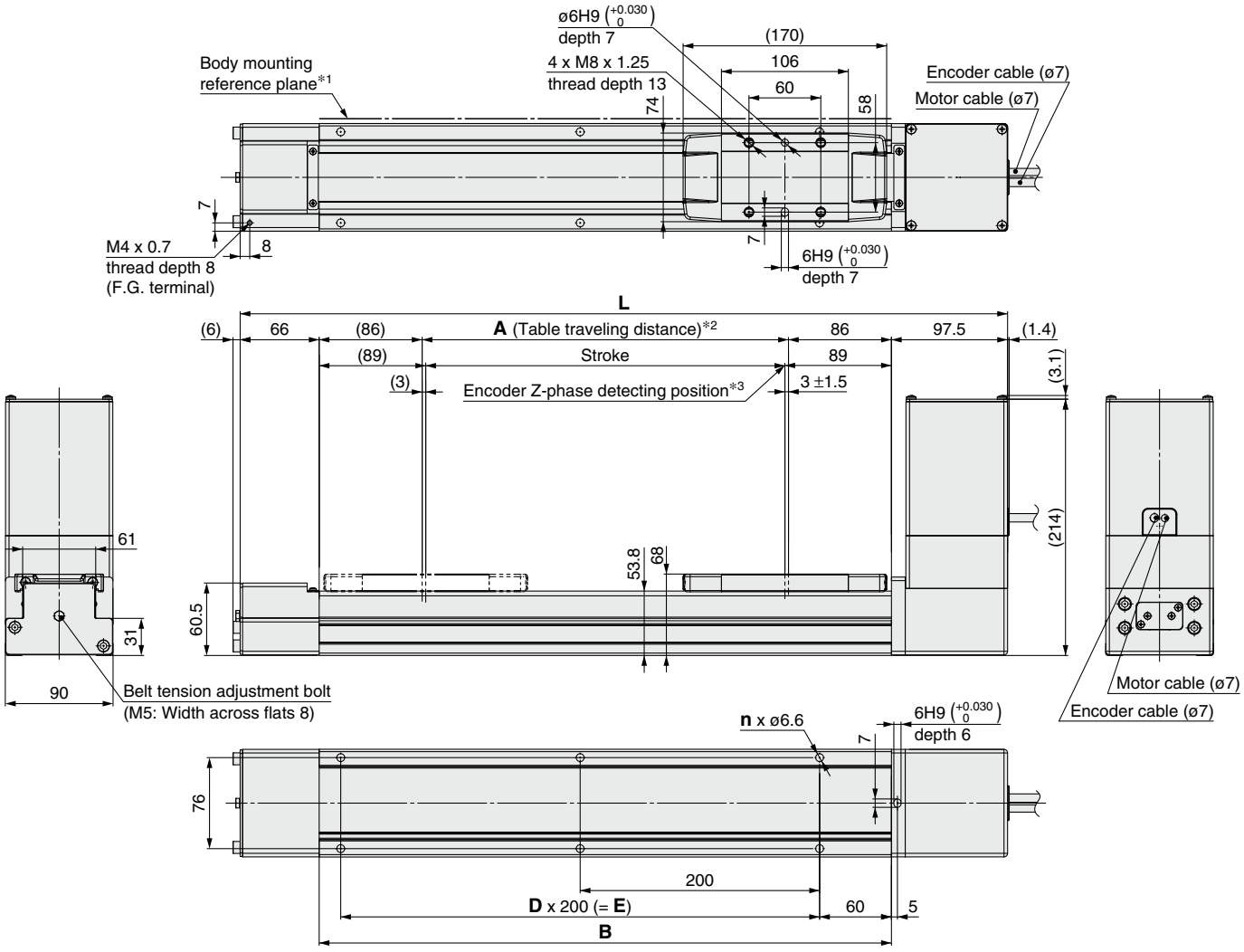

*1 When mounting the actuator using the body mounting reference plane, set the height of the opposite surface or pin to be 3 mm or more because of round chamfering. (Recommended height 5 mm)
*2 This is the distance within which the table can move when it returns to origin. Make sure workpieces mounted on the table do not interfere with the workpieces and facilities around the table.
*3 The Z-phase first detecting position from the stroke end of the motor side

Motor option: With lock

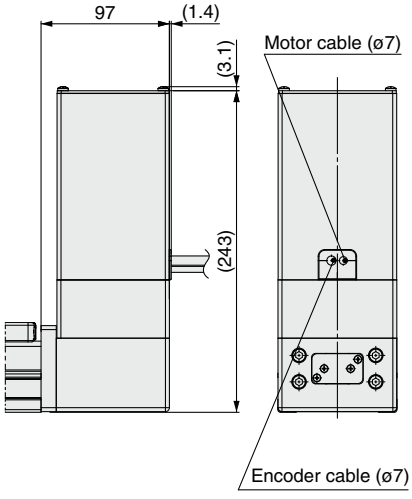

Dimensions

[mm]

Stroke	L	A	B	n	D	E
300	641.5	306	478	6	2	400
400	741.5	406	578	6	2	400
500	841.5	506	678	8	3	600
600	941.5	606	778	8	3	600
700	1041.5	706	878	10	4	800
800	1141.5	806	978	10	4	800
900	1241.5	906	1078	12	5	1000
1000	1341.5	1006	1178	12	5	1000
1100	1441.5	1106	1278	14	6	1200
1200	1541.5	1206	1378	14	6	1200
1300	1641.5	1306	1478	16	7	1400
1400	1741.5	1406	1578	16	7	1400
1500	1841.5	1506	1678	18	8	1600
1600	1941.5	1606	1778	18	8	1600
1700	2041.5	1706	1878	20	9	1800
1800	2141.5	1806	1978	20	9	1800
1900	2241.5	1906	2078	22	10	2000
2000	2341.5	2006	2178	22	10	2000
2500	2841.5	2506	2678	28	13	2600
3000	3341.5	3006	3178	32	15	3000

Dimensions: Belt Drive

LEFB40/Motor top mounting type

Positioning pin hole*1 (Option): Body bottom

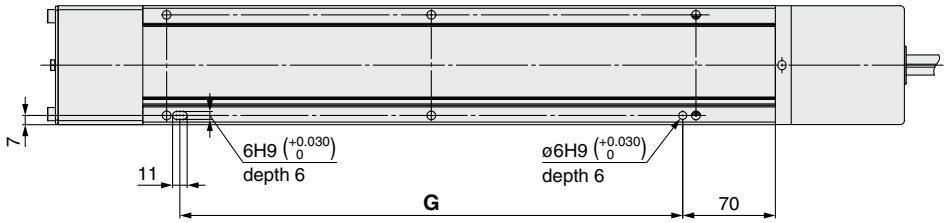

*1 When using the body bottom positioning pin holes, do not simultaneously use the housing B bottom pin hole.

With auto switch (Option)

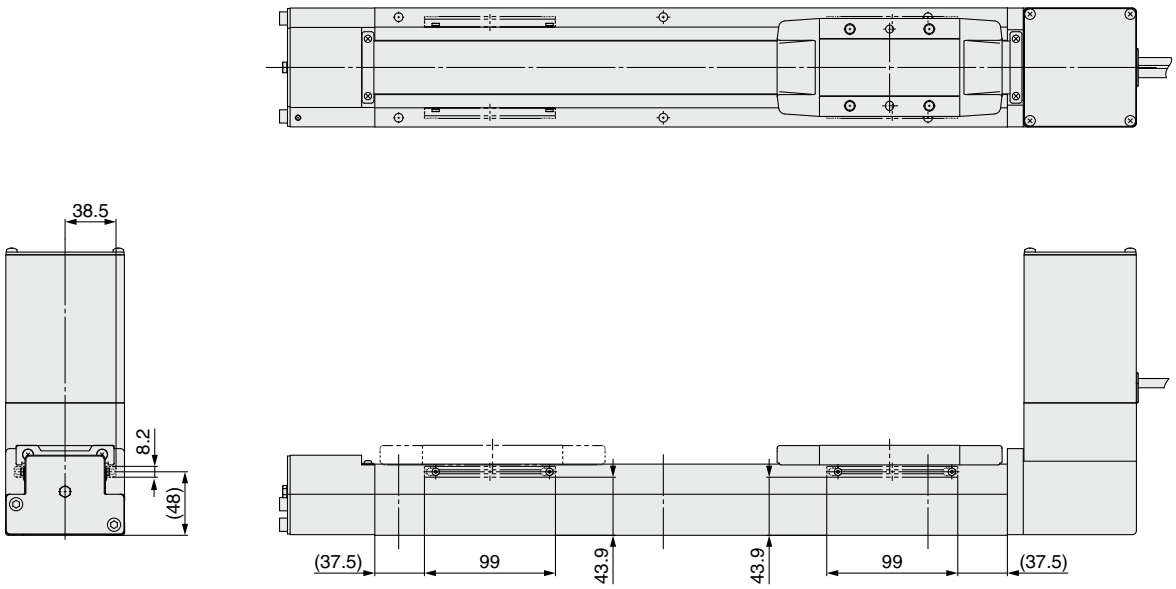

Dimensions [mm]

Stroke	G
300	380
400	380
500	580
600	580
700	780
800	780
900	980
1000	980
1100	1180
1200	1180
1300	1380
1400	1380
1500	1580
1600	1580
1700	1780
1800	1780
1900	1980
2000	1980
2500	2580
3000	2980

Dimensions: Belt Drive

LEFB40U/Motor bottom mounting type

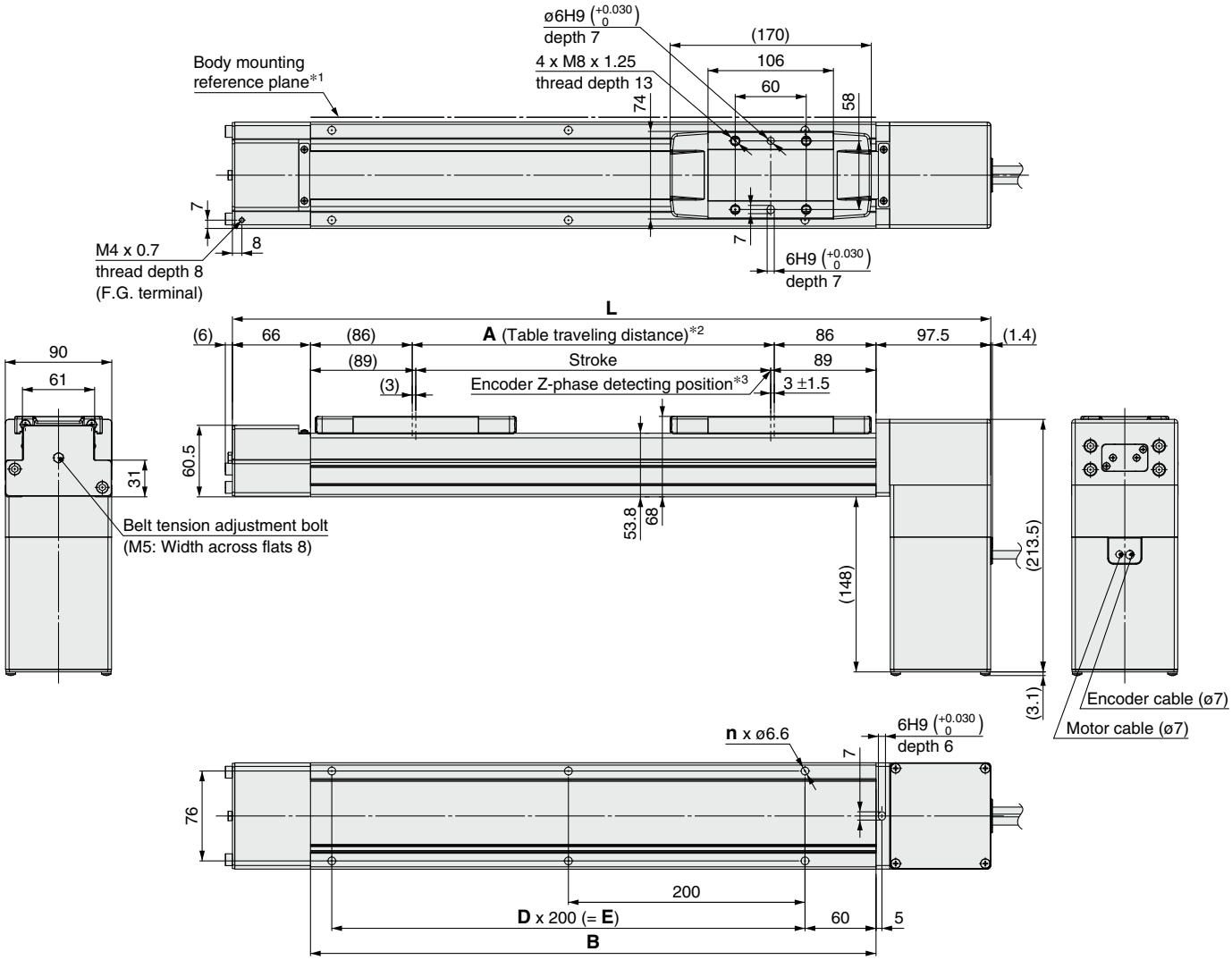

*1 When mounting the actuator using the body mounting reference plane, set the height of the opposite surface or pin to be 3 mm or more because of round chamfering. (Recommended height 5 mm)
*2 This is the distance within which the table can move when it returns to origin.
Make sure workpieces mounted on the table do not interfere with the workpieces and facilities around the table.
*3 The Z-phase first detecting position from the stroke end of the motor side

Motor option: With lock

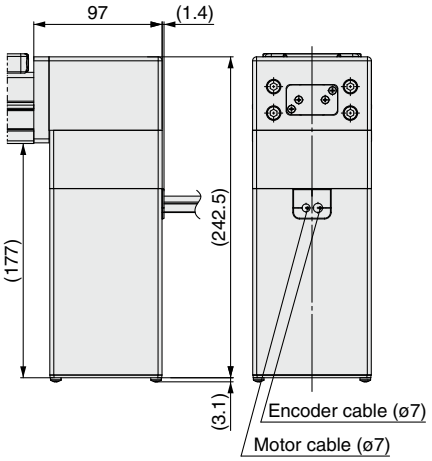

Dimensions

[mm]

Stroke	L	A	B	n	D	E
300	641.5	306	478	6	2	400
400	741.5	406	578	6	2	400
500	841.5	506	678	8	3	600
600	941.5	606	778	8	3	600
700	1041.5	706	878	10	4	800
800	1141.5	806	978	10	4	800
900	1241.5	906	1078	12	5	1000
1000	1341.5	1006	1178	12	5	1000
1100	1441.5	1106	1278	14	6	1200
1200	1541.5	1206	1378	14	6	1200
1300	1641.5	1306	1478	16	7	1400
1400	1741.5	1406	1578	16	7	1400
1500	1841.5	1506	1678	18	8	1600
1600	1941.5	1606	1778	18	8	1600
1700	2041.5	1706	1878	20	9	1800
1800	2141.5	1806	1978	20	9	1800
1900	2241.5	1906	2078	22	10	2000
2000	2341.5	2006	2178	22	10	2000
2500	2841.5	2506	2678	28	13	2600
3000	3341.5	3006	3178	32	15	3000

Dimensions: Belt Drive

LEFB40U/Motor bottom mounting type

Positioning pin hole*1 (Option): Body bottom

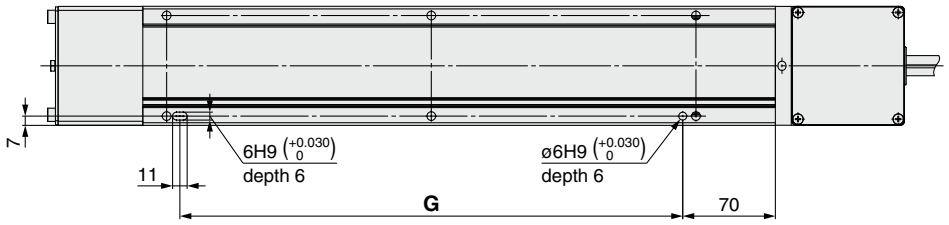

*1 When using the body bottom positioning pin holes, do not simultaneously use the housing B bottom pin hole.

With auto switch (Option)

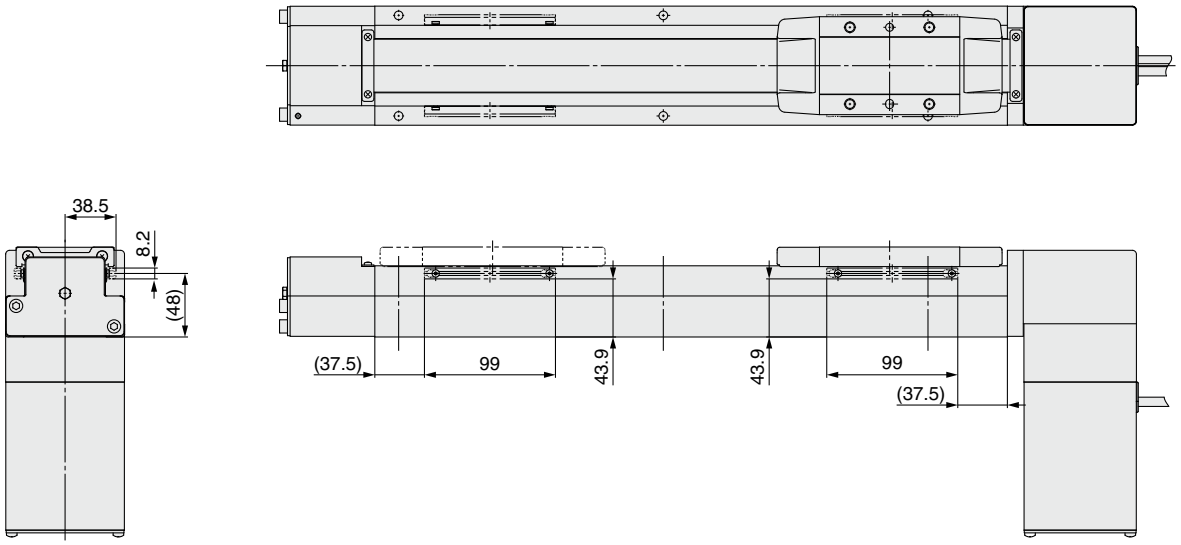

Dimensions [mm]

Stroke	G
300	380
400	380
500	580
600	580
700	780
800	780
900	980
1000	980
1100	1180
1200	1180
1300	1380
1400	1380
1500	1580
1600	1580
1700	1780
1800	1780
1900	1980
2000	1980
2500	2580
3000	2980

Step Motor (Servo/24 VDC) | Servo Motor (24 VDC) | AC Servo Motor

Support Guide/For Belt Drive

LEFG Series LEFG16, 25, 32, 40

RoHS

The support guide was designed to support workpieces with significant overhang.

- As the dimensions are the same as the LEF series body, installation is simple and contributes to a reduction in installation and assembly labor.
- The standard-equipped seal bands prevent grease from splashing and external foreign matter from entering.

Application example

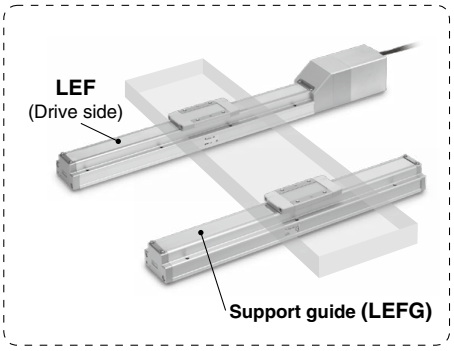

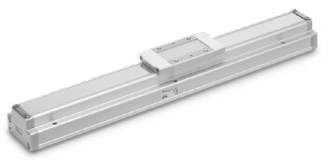

How to Order

LEF G 32 – BT – 300 N

❶ ❷ ❸ ❹

Support guide

❶ Size

16
25
32
40

❷ Type of mounting pitch

Symbol	LEFG16	LEFG25	LEFG32	LEFG40	Note	
BT	●	●	●	—	Belt drive	Step motor/Servo motor (24 VDC)
BS	—	●	●	●		AC servo motor

❸ Stroke [mm]

300	300
to	to
3000	3000

❹ Grease application (Seal band part)

Nil	With
N*1	Without (Roller specification)

*1 Only the mounting pitch type "BT" is applicable. All "BS" are roller specifications.

Applicable Stroke Table

Belt Drive/BT Step Motor (Servo/24 VDC) Servo Motor (24 VDC)

Model \ Stroke [mm]	300	350	400	450	500	550	600	650	700	750	800	850	900	950	1000
LEFG16-BT	●	—	—	—	●	—	●	—	●	—	●	—	●	—	●
LEFG25-BT	●	—	—	—	●	—	●	—	●	—	●	—	●	—	●
LEFG32-BT	●	—	—	—	●	—	●	—	●	—	●	—	●	—	●

Model \ Stroke [mm]	1100	1200	1300	1400	1500	1600	1700	1800	1900	2000
LEFG16-BT	—	—	—	—	—	—	—	—	—	—
LEFG25-BT	—	●	—	—	●	—	—	●	—	●
LEFG32-BT	—	●	—	—	●	—	—	●	—	●

Belt Drive/BS AC Servo Motor

Model \ Stroke [mm]	300	350	400	450	500	550	600	650	700	750	800	850	900	950	1000
LEFG25-BS	●	—	●	—	●	—	●	—	●	—	●	—	●	—	●
LEFG32-BS	●	—	●	—	●	—	●	—	●	—	●	—	●	—	●
LEFG40-BS	●	—	●	—	●	—	●	—	●	—	●	—	●	—	●

Model \ Stroke [mm]	1100	1200	1300	1400	1500	1600	1700	1800	1900	2000	2500	3000
LEFG25-BS	●	●	●	●	●	●	●	●	●	●	—	—
LEFG32-BS	●	●	●	●	●	●	●	●	●	●	●	—
LEFG40-BS	●	●	●	●	●	●	●	●	●	●	●	●

Weight

Belt Drive/BT

Step Motor (Servo/24 VDC) Servo Motor (24 VDC)

Model \ Stroke [mm]	300	350	400	450	500	550	600	650	700	750	800	850	900	950	1000
LEFG16-BT	0.62	—	—	—	0.86	—	0.98	—	1.1	—	1.22	—	1.34	—	1.46
LEFG25-BT	1.25	—	—	—	1.69	—	1.91	—	2.13	—	2.35	—	2.57	—	2.79
LEFG32-BT	1.92	—	—	—	2.56	—	2.88	—	3.20	—	3.52	—	3.84	—	4.16

Model \ Stroke [mm]	1100	1200	1300	1400	1500	1600	1700	1800	1900	2000
LEFG16-BT	—	—	—	—	—	—	—	—	—	—
LEFG25-BT	—	3.23	—	—	3.89	—	—	4.55	—	4.99
LEFG32-BT	—	4.80	—	—	5.76	—	—	6.72	—	7.36

Belt Drive/BS

AC Servo Motor

Model \ Stroke [mm]	300	350	400	450	500	550	600	650	700	750	800	850	900	950	1000
LEFG25-BS	1.25	—	—	—	1.69	—	1.91	—	2.13	—	2.35	—	2.57	—	2.79
LEFG32-BS	1.72	—	2.04	—	2.36	—	2.68	—	3.00	—	3.32	—	3.64	—	3.96
LEFG40-BS	2.72	—	3.15	—	3.58	—	4.01	—	4.44	—	4.87	—	5.30	—	5.73

Model \ Stroke [mm]	1100	1200	1300	1400	1500	1600	1700	1800	1900	2000	2500	3000
LEFG25-BS	3.01	3.23	3.45	3.67	3.89	4.11	4.33	4.55	4.77	4.99	—	—
LEFG32-BS	4.28	4.60	4.92	5.24	5.56	5.88	6.20	6.52	6.84	7.16	8.76	—
LEFG40-BS	6.16	6.59	7.02	7.45	7.88	8.31	8.74	9.17	9.60	10.03	12.18	14.33

Dimensions: Belt Drive

Step motor/Servo motor (24 VDC): LEFG16-BT

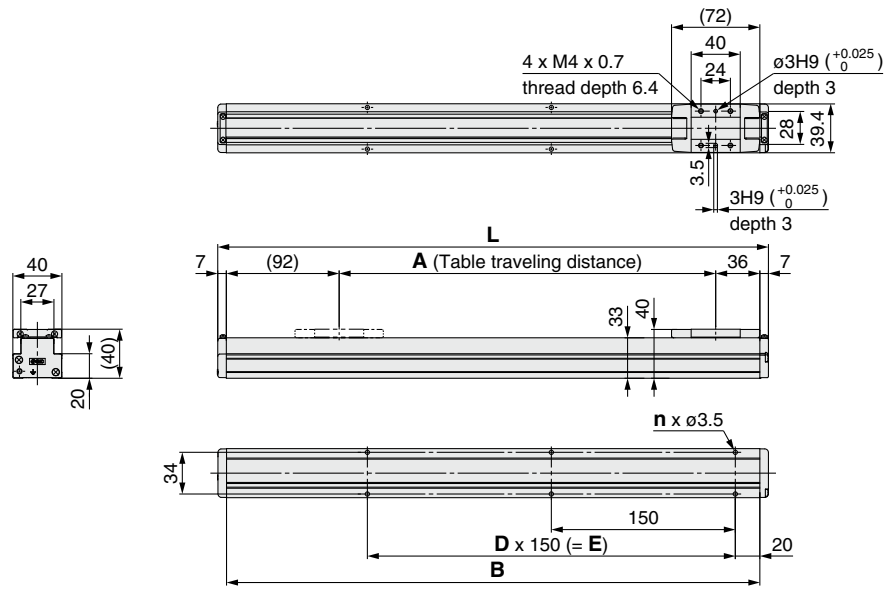

Dimensions

[mm]

Model	L	A	B	n	D	E
LEFG16-BT-300	449	307	435	6	2	300
LEFG16-BT-500	649	507	635	10	4	600
LEFG16-BT-600	749	607	735			
LEFG16-BT-700	849	707	835	12	5	750
LEFG16-BT-800	949	807	935	14	6	900
LEFG16-BT-900	1049	907	1035			
LEFG16-BT-1000	1149	1007	1135	16	7	1050

Dimensions: Belt Drive

Step motor/Servo motor (24 VDC): LEFG25-BT

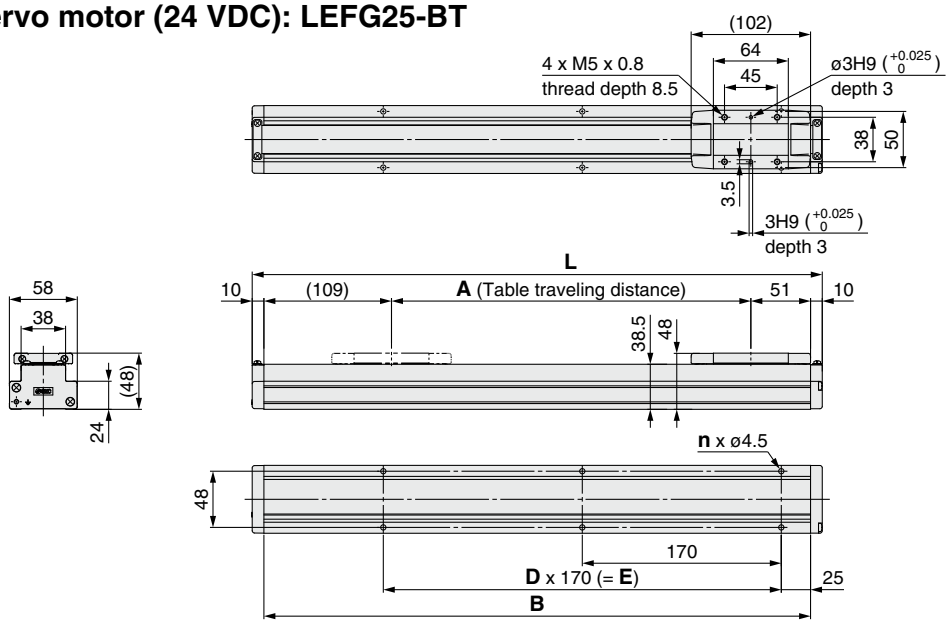

Dimensions [mm]

Model	L	A	B	n	D	E
LEFG25-BT-300	487	307	467	6	2	340
LEFG25-BT-500	687	507	667	8	3	510
LEFG25-BT-600	787	607	767	10	4	680
LEFG25-BT-700	887	707	867			
LEFG25-BT-800	987	807	967	12	5	850
LEFG25-BT-900	1087	907	1067	14	6	1020
LEFG25-BT-1000	1187	1007	1167			

Dimensions [mm]

Model	L	A	B	n	D	E
LEFG25-BT-1200	1387	1207	1367	16	7	1190
LEFG25-BT-1500	1687	1507	1667	20	9	1530
LEFG25-BT-1800	1987	1807	1967	24	11	1870
LEFG25-BT-2000	2187	2007	2167	26	12	2040

AC servo motor: LEFG25-BS

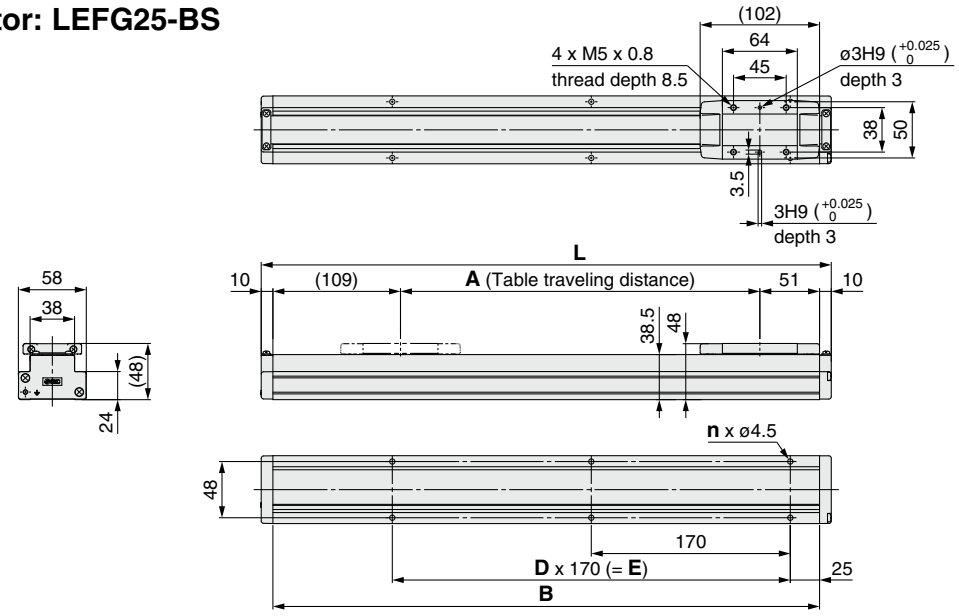

Dimensions [mm]

Model	L	A	B	n	D	E
LEFG25-BS-300	487	307	467	6	2	340
LEFG25-BS-400	587	407	567	8	3	510
LEFG25-BS-500	687	507	667			
LEFG25-BS-600	787	607	767	10	4	680
LEFG25-BS-700	887	707	867			
LEFG25-BS-800	987	807	967	12	5	850
LEFG25-BS-900	1087	907	1067	14	6	1020
LEFG25-BS-1000	1187	1007	1167			
LEFG25-BS-1100	1287	1107	1267	16	7	1190
LEFG25-BS-1200	1387	1207	1367			

Dimensions [mm]

Model	L	A	B	n	D	E
LEFG25-BS-1300	1487	1307	1467	18	8	1360
LEFG25-BS-1400	1587	1407	1567	20	9	1530
LEFG25-BS-1500	1687	1507	1667			
LEFG25-BS-1600	1787	1607	1767	22	10	1700
LEFG25-BS-1700	1887	1707	1867			
LEFG25-BS-1800	1987	1807	1967	24	11	1870
LEFG25-BS-1900	2087	1907	2067			
LEFG25-BS-2000	2187	2007	2167	26	12	2040

Dimensions: Belt Drive

Step motor/Servo motor (24 VDC): LEFG32-BT

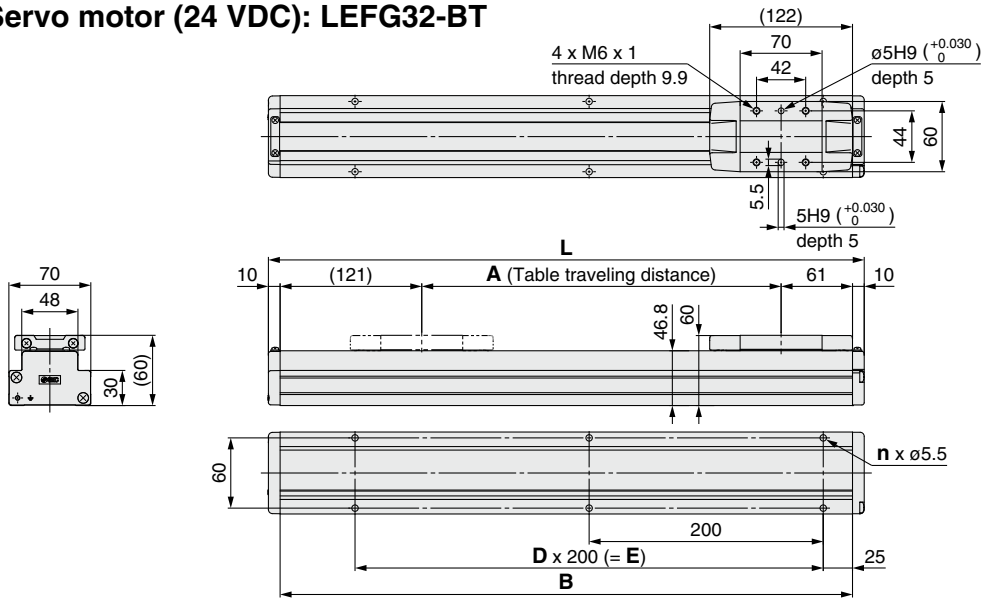

Dimensions [mm]

Model	L	A	B	n	D	E
LEFG32-BT-300	509	307	489	6	2	400
LEFG32-BT-500	709	507	689	8	3	600
LEFG32-BT-600	809	607	789			
LEFG32-BT-700	909	707	889	10	4	800
LEFG32-BT-800	1009	807	989			
LEFG32-BT-900	1109	907	1089	12	5	1000
LEFG32-BT-1000	1209	1007	1189			

Dimensions [mm]

Model	L	A	B	n	D	E
LEFG32-BT-1200	1409	1207	1389	14	6	1200
LEFG32-BT-1500	1709	1507	1689	18	8	1600
LEFG32-BT-1800	2009	1807	1989	20	9	1800
LEFG32-BT-2000	2209	2007	2189	22	10	2000

AC servo motor: LEFG32-BS

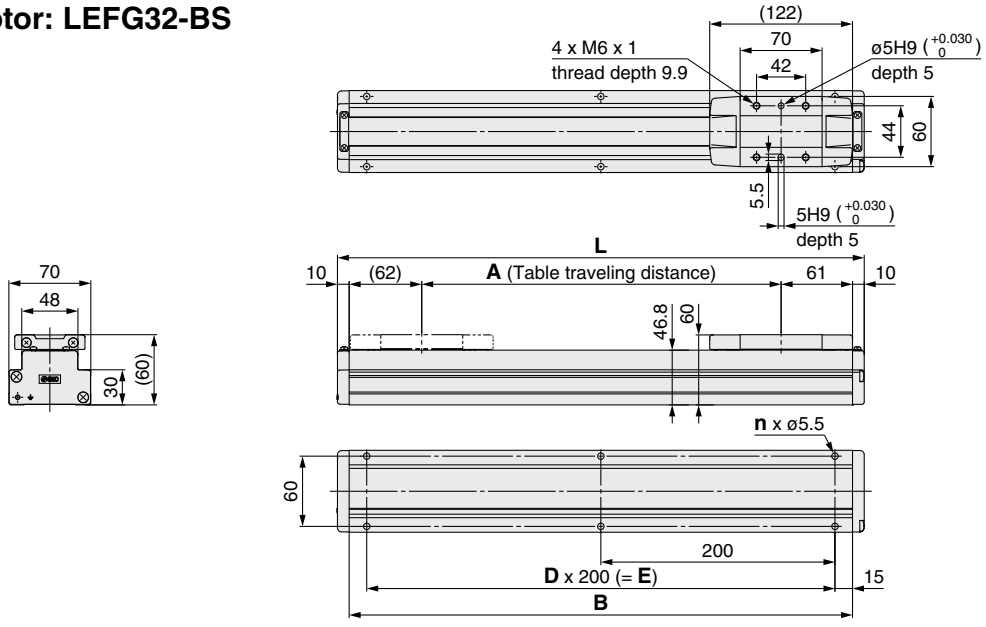

Dimensions [mm]

Model	L	A	B	n	D	E
LEFG32-BS-300	450	307	430	6	2	400
LEFG32-BS-400	550	407	530			
LEFG32-BS-500	650	507	630	8	3	600
LEFG32-BS-600	750	607	730			
LEFG32-BS-700	850	707	830	10	4	800
LEFG32-BS-800	950	807	930			
LEFG32-BS-900	1050	907	1030	12	5	1000
LEFG32-BS-1000	1150	1007	1130			
LEFG32-BS-1100	1250	1107	1230	14	6	1200
LEFG32-BS-1200	1350	1207	1330			

Dimensions [mm]

Model	L	A	B	n	D	E
LEFG32-BS-1300	1450	1307	1430	16	7	1400
LEFG32-BS-1400	1550	1407	1530			
LEFG32-BS-1500	1650	1507	1630	18	8	1600
LEFG32-BS-1600	1750	1607	1730			
LEFG32-BS-1700	1850	1707	1830	20	9	1800
LEFG32-BS-1800	1950	1807	1930			
LEFG32-BS-1900	2050	1907	2030	22	10	2000
LEFG32-BS-2000	2150	2007	2130			
LEFG32-BS-2500	2650	2507	2630	28	13	2600

Dimensions: Belt Drive

AC servo motor: LEFG40-BS

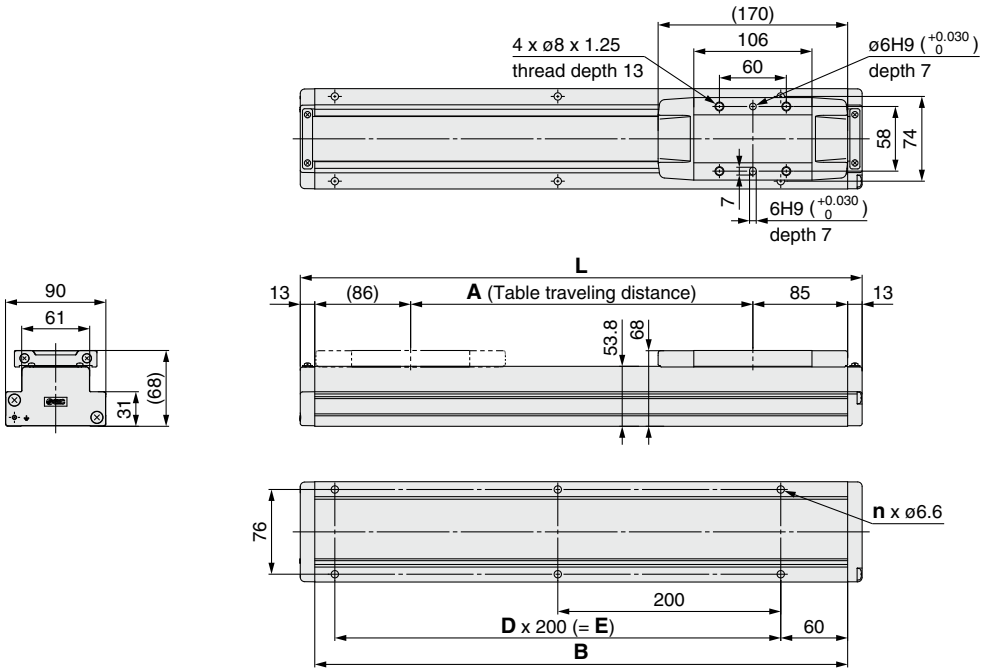

Dimensions [mm]

Model	L	A	B	n	D	E
LEFG40-BS-300	504	307	478	6	2	400
LEFG40-BS-400	604	407	578			
LEFG40-BS-500	704	507	678	8	3	600
LEFG40-BS-600	804	607	778			
LEFG40-BS-700	904	707	878	10	4	800
LEFG40-BS-800	1004	807	978			
LEFG40-BS-900	1104	907	1078	12	5	1000
LEFG40-BS-1000	1204	1007	1178			
LEFG40-BS-1100	1304	1107	1278	14	6	1200
LEFG40-BS-1200	1404	1207	1378			

Dimensions [mm]

Model	L	A	B	n	D	E
LEFG40-BS-1300	1504	1307	1478	16	7	1400
LEFG40-BS-1400	1604	1407	1578			
LEFG40-BS-1500	1704	1507	1678	18	8	1600
LEFG40-BS-1600	1804	1607	1778			
LEFG40-BS-1700	1904	1707	1878	20	9	1800
LEFG40-BS-1800	2004	1807	1978			
LEFG40-BS-1900	2104	1907	2078	22	10	2000
LEFG40-BS-2000	2204	2007	2178			
LEFG40-BS-2500	2704	2507	2678	28	13	2600
LEFG40-BS-3000	3204	3007	3178	32	15	3000

LEF Series
Auto Switch Mounting

Auto Switch Mounting Position

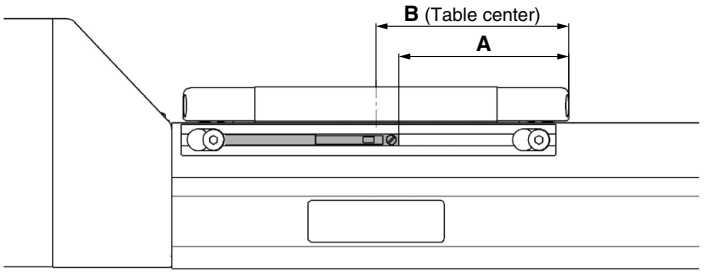

[mm]

Model	Size	A	B	Operating range
LEFS LEFB	25	45	51	4.9
	32	55	61	3.9
	40	79	85	5.3

* The applicable auto switch is D-M9 (N/P/B) (W) (M/L/Z).
* The operating range is a guideline including hysteresis, not meant to be guaranteed. There may be large variations depending on the ambient environment.
* Adjust the auto switch after confirming the operating conditions in the actual setting.

Auto Switch Mounting

Rotate the bolts for auto switch mounting bracket three to four times to loosen them (Removing them is not required), and slide and remove the auto switch mounting bracket. Then, insert a switch into the groove on the mounting bracket.
As the mounting bolts for installing the product body interfere with the auto switch mounting bracket, mount the auto switch mounting bracket after installing the product body. After installing product body, tighten the bolts for the auto switch mounting bracket.

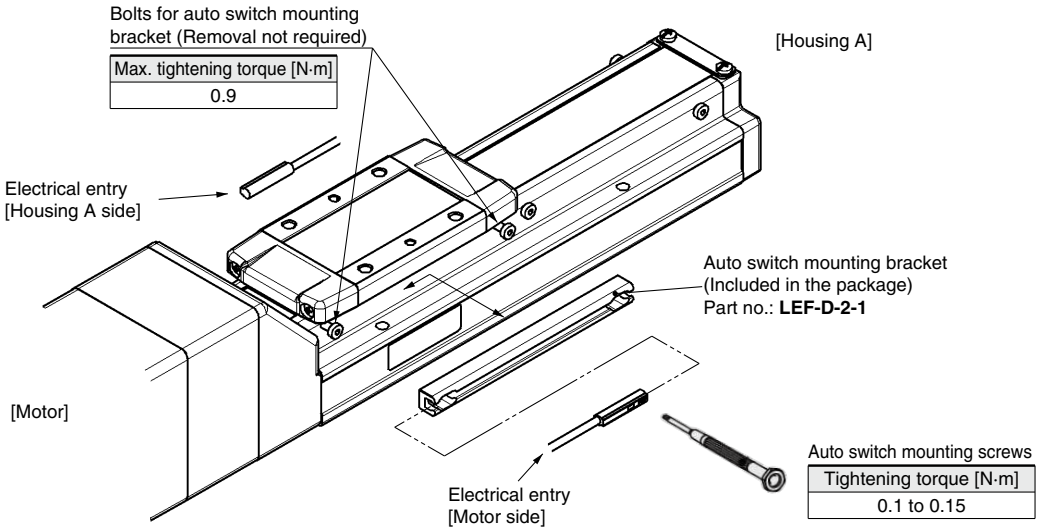

* The applicable auto switch is D-M9 (N/P/B) (W) (M/L/Z).
* The direction of the lead wire entry is specified. If it is mounted in the opposite direction, the auto switch may malfunction.
* Tighten the auto switch mounting screws (provided together with the auto switch), using a precision screwdriver with a handle diameter of approximately 5 to 6 mm.
* If more than two auto switch mounting brackets are required, please order them separately. All eight bolts for attaching the auto switch mounting bracket at the stroke end are tightened into the body when the product is shipped.
  For 50-mm stroke type, only four bolts are tightened on the motor side.

Solid State Auto Switch
Direct Mounting Type
D-M9N/D-M9P/D-M9B

Refer to the SMC website for details on products that are compliant with international standards.

Grommet

- **2-wire load current is reduced (2.5 to 40 mA).**
- **Using flexible cable as standard spec.**



Auto Switch Specifications

PLC: Programmable Logic Controller

D-M9□, D-M9□V (With indicator light)			
Auto switch model	D-M9N	D-M9P	D-M9B
Electrical entry direction	In-line		
Wiring type	3-wire		2-wire
Output type	NPN	PNP	—
Applicable load	IC circuit, Relay, PLC		24 VDC relay, PLC
Power supply voltage	5, 12, 24 VDC (4.5 to 28 V)		—
Current consumption	10 mA or less		—
Load voltage	28 VDC or less	—	24 VDC (10 to 28 VDC)
Load current	40 mA or less		2.5 to 40 mA
Internal voltage drop	0.8 V or less at 10 mA (2 V or less at 40 mA)		4 V or less
Leakage current	100 μA or less at 24 VDC		0.8 mA or less
Indicator light	Red LED illuminates when turned ON.		
Standard	CE marking, RoHS		

⚠Caution

Precautions

Fix the auto switch with the existing screw installed on the auto switch body. The auto switch may be damaged if a screw other than the one supplied is used.

Oilproof Heavy-duty Lead Wire Specifications

Auto switch model		D-M9N	D-M9P	D-M9B
Sheath	Outside diameter [mm]	2.6		
Insulator	Number of cores	3 cores (Brown/Blue/Black)		2 cores (Brown/Blue)
	Outside diameter [mm]	0.88		
Conductor	Effective area [mm²]	0.15		
	Strand diameter [mm]	0.05		
Minimum bending radius [mm] (Reference values)		17		

∗ Refer to page 996 for solid state auto switch common specifications.
∗ Refer to page 996 for lead wire lengths.

Weight

[g]

Auto switch model		D-M9N	D-M9P	D-M9B
Lead wire length	0.5 m (**Nil**)	8		7
	1 m (**M**)	14		13
	3 m (**L**)	41		38
	5 m (**Z**)	68		63

Dimensions

[mm]

D-M9□

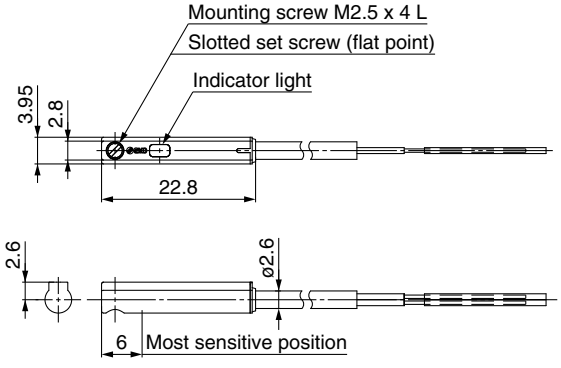

Normally Closed Solid State Auto Switch Direct Mounting Type
D-M9NE(V)/D-M9PE(V)/D-M9BE(V)

Refer to the SMC website for details on products that are compliant with international standards.

Grommet

- **Output signal turns on when no magnetic force is detected.**
- **Can be used for the actuator adopted by the solid state auto switch D-M9 series (excluding special order products)**



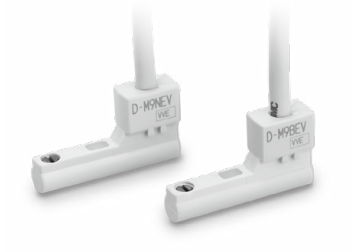

⚠Caution

Precautions

Fix the auto switch with the existing screw installed on the auto switch body. The auto switch may be damaged if a screw other than the one supplied is used.

Auto Switch Specifications

PLC: Programmable Logic Controller

D-M9□E, D-M9□EV (With indicator light)						
Auto switch model	D-M9NE	D-M9NEV	D-M9PE	D-M9PEV	D-M9BE	D-M9BEV
Electrical entry direction	In-line	Perpendicular	In-line	Perpendicular	In-line	Perpendicular
Wiring type	3-wire				2-wire	
Output type	NPN		PNP		—	
Applicable load	IC circuit, Relay, PLC				24 VDC relay, PLC	
Power supply voltage	5, 12, 24 VDC (4.5 to 28 V)				—	
Current consumption	10 mA or less				—	
Load voltage	28 VDC or less		—		24 VDC (10 to 28 VDC)	
Load current	40 mA or less				2.5 to 40 mA	
Internal voltage drop	0.8 V or less at 10 mA (2 V or less at 40 mA)				4 V or less	
Leakage current	100 μA or less at 24 VDC				0.8 mA or less	
Indicator light	Red LED illuminates when turned ON.					
Standard	CE marking, RoHS					

Oilproof Heavy-duty Lead Wire Specifications

Auto switch model		D-M9NE(V)	D-M9PE(V)	D-M9BE(V)
Sheath	Outside diameter [mm]	2.6		
Insulator	Number of cores	3 cores (Brown/Blue/Black)		2 cores (Brown/Blue)
	Outside diameter [mm]	0.88		
Conductor	Effective area [mm²]	0.15		
	Strand diameter [mm]	0.05		
Minimum bending radius [mm] (Reference values)		17		

∗ Refer to page 996 for solid state auto switch common specifications.
∗ Refer to page 996 for lead wire lengths.

Weight

[g]

Auto switch model		D-M9NE(V)	D-M9PE(V)	D-M9BE(V)
Lead wire length	0.5 m (**Nil**)	8		7
	1 m (**M**)∗1	14		13
	3 m (**L**)	41		38
	5 m (**Z**)∗1	68		63

∗1 The 1 m and 5 m options are produced upon receipt of order.

Dimensions

[mm]

D-M9□E

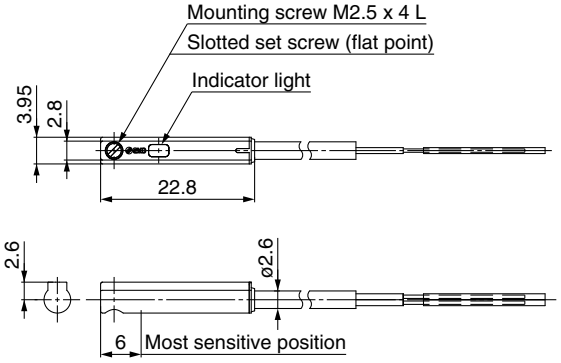

D-M9□EV

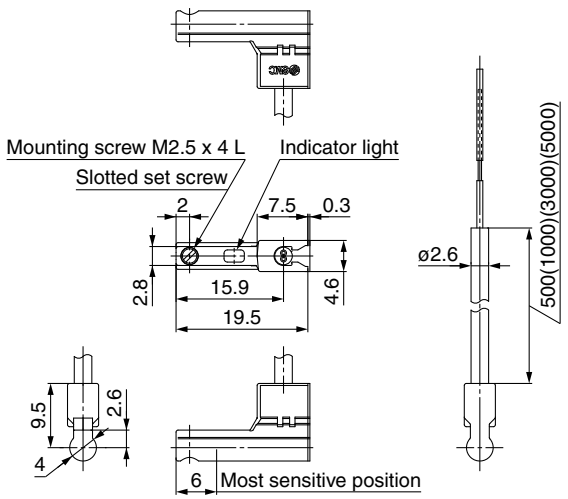

2-Color Indicator Solid State Auto Switch Direct Mounting Type
D-M9NW/D-M9PW/D-M9BW

Refer to the SMC website for details on products that are compliant with international standards.

Grommet

- **2-wire load current is reduced (2.5 to 40 mA).**
- **Using flexible cable as standard spec.**
- **The proper operating range can be determined by the color of the light. (Red → Green ← Red)**



⚠Caution

Precautions

Fix the auto switch with the existing screw installed on the auto switch body. The auto switch may be damaged if a screw other than the one supplied is used.

Auto Switch Specifications

PLC: Programmable Logic Controller

D-M9□W, D-M9□WV (With indicator light)			
Auto switch model	**D-M9NW**	**D-M9PW**	**D-M9BW**
Electrical entry direction	In-line		
Wiring type	3-wire		2-wire
Output type	NPN	PNP	—
Applicable load	IC circuit, Relay, PLC		24 VDC relay, PLC
Power supply voltage	5, 12, 24 VDC (4.5 to 28 V)		—
Current consumption	10 mA or less		—
Load voltage	28 VDC or less	—	24 VDC (10 to 28 VDC)
Load current	40 mA or less		2.5 to 40 mA
Internal voltage drop	0.8 V or less at 10 mA (2 V or less at 40 mA)		4 V or less
Leakage current	100 μA or less at 24 VDC		0.8 mA or less
Indicator light	Operating range ····· Red LED illuminates. Proper operating range ····· Green LED illuminates.		
Standard	CE marking, RoHS		

Oilproof Flexible Heavy-duty Lead Wire Specifications

Auto switch model		**D-M9NW**	**D-M9PW**	**D-M9BW**
Sheath	Outside diameter [mm]	2.6		
Insulator	Number of cores	3 cores (Brown/Blue/Black)		2 cores (Brown/Blue)
	Outside diameter [mm]	0.88		
Conductor	Effective area [mm²]	0.15		
	Strand diameter [mm]	0.05		
Minimum bending radius [mm] (Reference values)		17		

∗ Refer to page 996 for solid state auto switch common specifications.
∗ Refer to page 996 for lead wire lengths.

Weight

[g]

Auto switch model		**D-M9NW**	**D-M9PW**	**D-M9BW**
Lead wire length	0.5 m (**Nil**)	8		7
	1 m (**M**)	14		13
	3 m (**L**)	41		38
	5 m (**Z**)	68		63

Dimensions

[mm]

D-M9□W

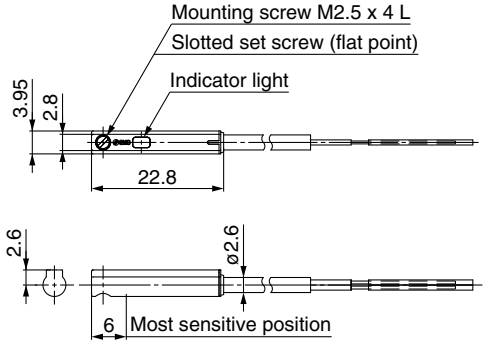

LEF Series
Specific Product Precautions 1

Be sure to read this before handling the products. Refer to page 984 for safety instructions, pages 985 to 990 for electric actuator precautions, and pages 991 to 1000 for auto switch precautions.

Design

⚠Caution

1. Do not apply a load in excess of the specification limits.

Select a suitable actuator by work load and allowable moment. If a load in excess of the specification limits is applied to the guide, adverse effects such as the generation of play in the guide, reduced accuracy, or reduced service life of the product may occur.

2. Do not use the product in applications where excessive external force or impact force is applied to it.

This can cause a malfunction.

Selection

⚠Warning

1. Do not increase the speed in excess of the specification limits.

Select a suitable actuator by the relationship between the allowable work load and speed, and the allowable speed of each stroke. If the product is used outside of the specification limits, adverse effects such as the generation of noise, reduced accuracy, or reduced service life of the product may occur.

2. Do not use the product in applications where excessive external force or impact force is applied to it.

This can cause a malfunction.

3. When the product repeatedly cycles with partial strokes (see the table below), operate it at a full stroke at least once every few dozen cycles.

Failure to do so may result in the product running out of lubrication.

Model	Partial stroke
LEF□16	40 mm or less
LEF□25	65 mm or less
LEF□32	70 mm or less
LEF□40	105 mm or less

4. When external force is to be applied to the table, it is necessary to add the external force to the work load as the total carried load when selecting a size.

When a cable duct or flexible moving tube is attached to the actuator, the sliding resistance of the table will increase, which may lead to the malfunction of the product.

5. When the stroke exceeds 2000 mm, a joint needs to be added to the guide rail for extension. When passing over the joint, slight vibration may occur.

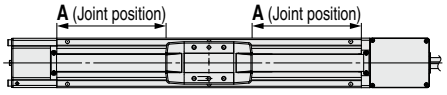

Size	Stroke	A
32	2500	370
40	2500	320
	3000	820

Handling

⚠Caution

1. Set the [In position] in the step data to at least 0.5 (at least 1 for the belt type).

If it is set any lower, the completion signal of the [In position] may not be properly output.

Handling

⚠Caution

2. INP output signal

1) Positioning operation

When the product comes within the set range of the step data [In position], the INP output signal will turn ON.
Initial value: Set to [0.50] or higher.

3. Never allow the table to collide with the stroke end except during return to origin.

When incorrect instructions are inputted, such as those which cause the product to operate outside of the specification limits or outside of the actual stroke through changes in the controller/driver settings and/or origin position, the table may collide with the stroke end of the actuator. Be sure to check these points before use.

If the table collides with the stroke end of the actuator, the guide, belt, or internal stopper may break. This can result in abnormal operation.

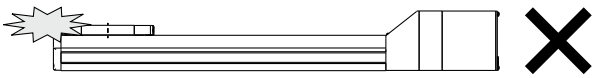

Handle the actuator with care when it is used in the vertical direction as the workpiece will fall freely from its own weight.

4. The moving force should be the initial value.

If the moving force is set below the initial value, it may cause the generation of an alarm.

5. The actual speed of this actuator is affected by the work load and stroke.

Check the model selection section of the catalog.

6. Do not apply a load, impact, or resistance in addition to the transferred load during return to origin.

Additional force will cause the displacement of the origin position since it is based on the detected motor torque.

7. Do not dent, scratch, or cause other damage to the body or table mounting surfaces.

Doing so may cause unevenness in the mounting surface, play in the guide, or an increase in the sliding resistance.

8. Do not apply strong impact or an excessive moment while mounting a workpiece.

If an external force over the allowable moment is applied, it may cause play in the guide or an increase in the sliding resistance.

9. Keep the flatness of the mounting surface within 0.1 mm/500 mm.

If a workpiece or base does not sit evenly on the body of the product, play in the guide or an increase in the sliding resistance may occur.

10. When mounting the product, secure a bending diameter of 40 mm or longer for the cable.

11. Do not allow a workpiece to collide with the table during the positioning operation or within the positioning range.

12. For the model where grease is applied to the dust seal band for sliding, when wiping off the grease to remove foreign matter, etc., be sure to reapply grease afterward.

13. When bottom mounted, the dust seal band may become warped.

LEF Series
Specific Product Precautions 2

Be sure to read this before handling the products. Refer to page 984 for safety instructions, pages 985 to 990 for electric actuator precautions, and pages 991 to 1000 for auto switch precautions.

Handling

⚠Caution

14. When mounting the product, use screws of adequate length and tighten them with adequate torque.

Tightening the screws with a higher torque than recommended may result in a malfunction and/or decrease in guide accuracy, while tightening with a lower torque can result in the displacement of the mounting position or, in extreme conditions, the actuator could become detached from its mounting position.

Body fixed

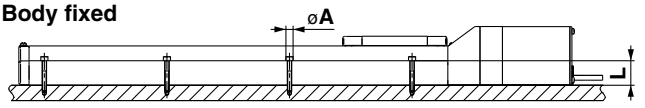

Model	Screw size	Max. tightening torque [N·m]	ø**A** [mm]	**L** [mm]
LEF□16	M3	0.6	3.5	20
LEF□25	M4	1.5	4.5	24
LEF□32	M5	3.0	5.5	30
LEF□40	M6	5.2	6.6	31

Body mounting

For housing B bottom

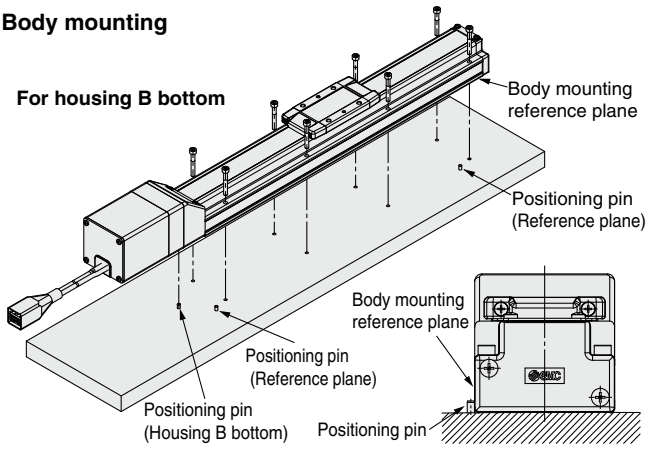

The traveling parallelism is the reference plane for the body mounting reference plane. If the traveling parallelism for a table is required, set the reference plane against parallel pins, etc.

For body bottom

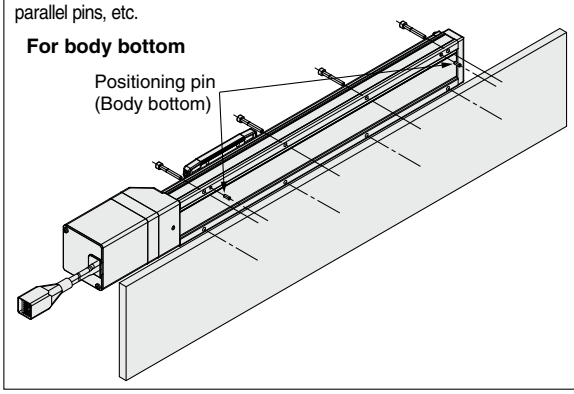

Workpiece fixed

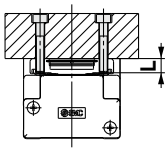

Model	Screw size	Max. tightening torque [N·m]	**L** (Max. screw-in depth) [mm]
LEF□16	M4 x 0.7	1.5	6
LEF□25	M5 x 0.8	3.0	8
LEF□32	M6 x 1	5.2	9
LEFS40	M8 x 1.25	12.5	13

To prevent the workpiece retaining screws from touching the body, use screws that are 0.5 mm or shorter than the maximum screw-in depth. If long screws are used, they may touch the body and cause a malfunction.

15. Do not operate by fixing the table and moving the actuator body.

16. The belt drive actuator cannot be used for vertical applications.

17. Check the specifications for the minimum speed of each actuator.

Failure to do so may result in unexpected malfunctions such as knocking.

18. In the case of the belt drive actuator, vibration may occur during operation at speeds within the actuator specifications due to the operating conditions. Change the speed setting to a speed that does not cause vibration.

19. When fluctuations in the load are caused during operation, malfunction, noise, or alarm generation may occur. (In the case of the AC servo motor)

The gain tuning may not be suitable for fluctuating loads. Adjust the gain properly by following the instructions in the driver manual.

Maintenance

⚠Warning

Maintenance frequency

Perform maintenance according to the table below.

Frequency	Appearance check	Internal check	Belt check
Inspection before daily operation	○	—	—
Inspection every 6 months/1000 km/ 5 million cycles∗1	○	○	○

∗1 Select whichever comes first.

- **Items for visual appearance check**
  1. Loose set screws, Abnormal amount of dirt, etc.
  2. Check for visible damage, Check of cable joint
  3. Vibration, Noise
- **Items for internal check**
  1. Lubricant condition on moving parts
  2. Loose or mechanical play in fixed parts or fixing screws
- **Items for belt check**

Stop operation immediately and replace the belt when any of the following occur. In addition, ensure your operating environment and conditions satisfy the requirements specified for the product.

a. Tooth shape canvas is worn out
Canvas fiber becomes fuzzy, Rubber is coming off and the fiber has become whitish, Lines of fibers have become unclear

b. Peeling off or wearing of the side of the belt
Belt corner has become rounded and frayed threads stick out

c. Belt is partially cut
Belt is partially cut, Foreign matter caught in the teeth of other parts is causing damage

d. A vertical line on belt teeth is visible
Damage which is made when the belt runs on the flange

e. Rubber back of the belt is softened and sticky

f . Cracks on the back of the belt are visible