WP3XFU120



Color: Bronze

Weight: 11.5 lbs

Project:	**Type:**
Prepared By:	**Date:**

Driver Info

Type	Constant Current
120V	0.96A/0.80A/0.64A
208V	0.55A/0.46A/0.37A
240V	0.51A/0.42A/0.34A
277V	0.44A/0.36A/0.29A
Input Watts	75.9-117.6W

LED Info

Watts	120/100/80W
Color Temp	3000K/4000K/5000K
Color Accuracy	81-84 CRI
L70 Lifespan	100,000 Hours
Lumens	10,500-16,953 lm
Efficacy	132.1-151.2 lm/W

Technical Specifications

Field Adjustability

Field Adjustable:
Field Adjustable Light Output:
120W/100W/80W (factory default 120W)
Color temperature (selectable by 3000K, 4000K and 5000K)

Compliance

UL Listed:
Suitable for wet locations

IESNA LM-79 & LM-80 Testing:
RAB LED luminaires and LED components have been tested by an independent laboratory in accordance with IESNA LM-79 and LM-80.

IP Rating:
Ingress protection rating of IP65 for dust and water

Performance

Lifespan:
100,000-Hour LED lifespan based on IES LM-80 results and TM-21 calculations

Wattage Equivalency:
120W: 400W Metal Halide
100W: 400W Metal Halide
80W: 400W Metal Halide

LED Characteristics

LEDs:
Long-life, high-efficiency, surface-mount LEDs

Electrical

Driver:
120W: Constant Current, Class 1, 120-277V, 50/60 Hz, 120V: 0.96A, 208V: 0.55A, 240V: 0.51A, 277V: 0.44A
100W: Constant Current, Class 1, 120-277V, 50/60 Hz, 120V: 0.80A, 208V: 0.46A, 240V: 0.42A, 277V: 0.36A
80W: Constant Current, Class 1, 120-277V, 50/60 Hz, 120V: 0.64A, 208V: 0.37A, 240V: 0.34A, 277V: 0.29A

Dimming Driver:
Driver includes dimming control wiring for 0-10V dimming systems. Requires separate 0-10V DC dimming circuit. Dims down to 10%.

THD:
13.42% at 120V, 9..88% at 277V

Power Factor:
99% at 120V, 97% at 277V

Photocell:
120-277V selectable photocell that can be turned on and off.

Construction

Cold Weather Starting:
The minimum starting temperature is -40°C (-40°F)

Ambient Temperature :
Max Power Temp Rating: 50°C (122°F)
Middle Power Temp Rating: 55°C (131°F)
Low Power Temp Rating: 58°C (137°F)

Housing:
Die-cast aluminum

Lens:
Tempered glass

Finish:
Formulated for high durability and long-lasting color

Green Technology:
Mercury and UV free. RoHS-compliant components.

Installation

Mounting:
Wall mount

Other

Note:
All values are typical (tolerance +/- 10%)

Copyright © 2024 RAB Lighting All Rights Reserved Note: Specifications are subject to change at any time without notice

Technical Specifications (continued)

5 Yr Limited Warranty:
The RAB 5-year, limited warranty covers light output, driver performance and paint finish. RAB's warranty is subject to all terms and conditions found at rablighting.com/warranty.

Buy American Act Compliance:
RAB values USA manufacturing! Upon request, RAB may be able to manufacture this product to be compliant with the Buy American Act (BAA). Please contact customer service to request a quote for the product to be made BAA compliant.

Dimensions

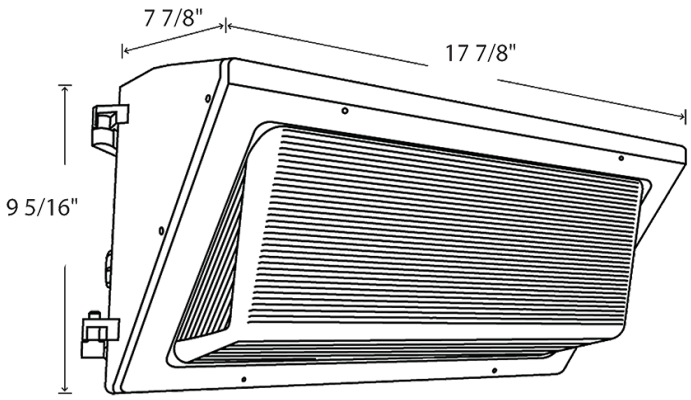

Features

- IP65 Rated
- 100,000-Hour LED lifespan
- 5-Year, limited warranty

Ordering Matrix

Family	Wattage	Color Temp	Finish	Voltage/Driver	Options
WP3XFU	120				
	50 = 50/40/30W **120 =** 120/100/80W **150 =** 150/130/100W	**Blank =** 3000K/4000K/5000K	**Blank =** Bronze	**Blank =** 120-277V, 0-10V Dimming	**Blank =** Selectable Photocell **/LC =** Lightcloud Controller **/LCB =** Lightcloud Blue Enabled **/LCBS =** Lightcloud Blue Enabled w/PIR Sensor **/LCBS/MVS =** Lightcloud Blue Enabled w/MVS Sensor

Copyright © 2024 RAB Lighting All Rights Reserved Note: Specifications are subject to change at any time without notice