X17FA35W



Ultra-economy field adjustable X17 is available in three sizes and a total of 6 lumen packages, all with a wide 7H x 7V NEMA distribution that makes them the optimal floodlight for a large variety of general-purpose applications. 0-10V dimming is standard on all models.

Color: White

Weight: 2.7 lbs

Project:	**Type:**
Prepared By:	**Date:**

Driver Info

Type	Constant Current
120V	0.35A
208V	0.20A
240V	0.16A
277V	0.14A
Input Watts	35.9/34.6/35.9W

LED Info

Watts	35W
Color Temp	3000K/4000K/5000K
Color Accuracy	83/85/83 CRI
L70 Lifespan	100,000 Hours
Lumens	4642/5034/4864 lm
Efficacy	129.3/145.5/135.4 lm/W

Technical Specifications

Field Adjustability

Field Adjustable:
Color temperature selectable by 3000K, 4000K and 5000K

Compliance

UL Listed:
Suitable for wet locations

IESNA LM-79 & LM-80 Testing:
RAB LED luminaires and LED components have been tested by an independent laboratory in accordance with IESNA LM-79 and LM-80.

IP Rating:
Ingress protection rating of IP65 for dust and water

DLC Listed:
This product is listed by Design Lights Consortium (DLC) as an ultra-efficient premium product that qualifies for the highest tier of rebates from DLC Member Utilities. Designed to meet DLC 5.1 requirements.
DLC Product Code: PL2BE3TBJVAP

Electrical

Driver:
Constant Current, Class 2, 120-277V, 50/60Hz, 120V: 0.35A, 208V: 0.20A, 240V: 0.16A, 277V: 0.14A

Dimming Driver:
Driver includes wiring for 0-10V dimming systems. Dim as low as 10%.

THD:
10.97% at 120V, 10.75% at 277V

Power Factor:
99.3% at 120V, 94.8% at 277V

Photocell:
120-277V selectable photocell that can be turned on and off.

Surge Protection:
CM: 2.5kV
DM: 2.5kV

LED Characteristics

LEDs:
Long-life, high-efficacy, surface-mount LEDs

Color Uniformity:
RAB's range of Correlated Color Temperature follows the guidelines of the American National Standard for Specifications for the Chromaticity of Solid State Lighting (SSL) Products, ANSI C78.377-2017.

Construction

Cold Weather Starting:
The minimum starting temperature is -40°C (-40°F)

Maximum Ambient Temperature:
Suitable for use in up to 40°C (104°F)

Housing:
Precision die-cast aluminum

Mounting:
Robust knuckle mount with 180° adjustable swivel arm. Tilt angle in 10° increments.

Lens:
Tempered glass

Reflector:
Polycarbonate

Finish:
Formulated for high durability and long-lasting color

Green Technology:
Mercury and UV free. RoHS-compliant components.

Optical

NEMA Type:
NEMA Beam Spread of 7H x 7V

Copyright © 2023 RAB Lighting All Rights Reserved Note: Specifications are subject to change at any time without notice

Technical Specifications (continued)

Other

5 Yr Limited Warranty:
The RAB 5-year, limited warranty covers light output, driver performance and paint finish. RAB's warranty is subject to all terms and conditions found at rablighting.com/warranty.

Note:
All values are typical (tolerance +/- 10%)

Buy American Act Compliance:
RAB values USA manufacturing! Upon request, RAB may be able to manufacture this product to be compliant with the Buy American Act (BAA). Please contact customer service to request a quote for the product to be made BAA compliant.

Performance

Wattage Equivalency:
Equivalent to 150W Metal Halide

Dimensions

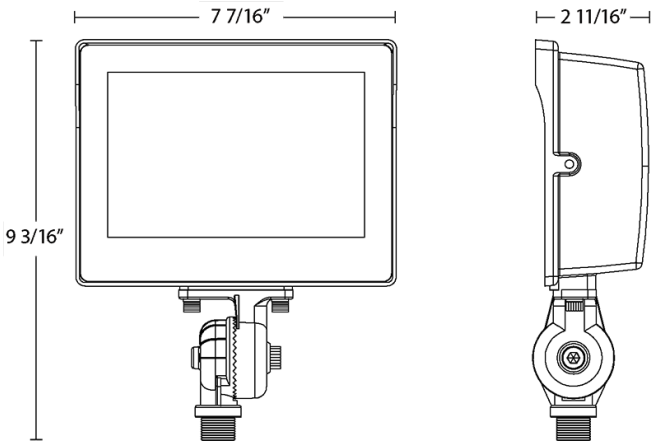

Features

- DLC Premium listed
- IP65 Rated
- 100,000-Hour LED lifespan
- 5-Year, limited warranty

Copyright © 2023 RAB Lighting All Rights Reserved Note: Specifications are subject to change at any time without notice

X17FA35W

Ordering Matrix

Family	Wattage	Field Adjustability	Mounting	Finish	Color Temp	Voltage	Options
X17	FA	35			W		
	15 = 15W **35 =** 35W **60 =** 60W **80 =** 80W **105 =** 105W **140 =** 140W **15 =** 15W **35 =** 35W **60 =** 60W **80 =** 80W **105 =** 105W **140 =** 140W	**FA =** 2-Way Field Adjustable	**Blank =** Knuckle **SF =** Slipfitter **T =** Trunnion	**Blank =** Bronze **W =** White	**Blank =** 3000K/4000K/5000K Selectable	**Blank =** 120-277V **/480 =** 480V	**Blank =** Selectable photocell

Copyright © 2023 RAB Lighting All Rights Reserved Note: Specifications are subject to change at any time without notice