Compact Pressure Switch

Series ZSE2 (For Vacuum)/ISE2 (For Positive Pressure)

For General Pneumatics



Can be integrated with ZX or ZR ejector system.

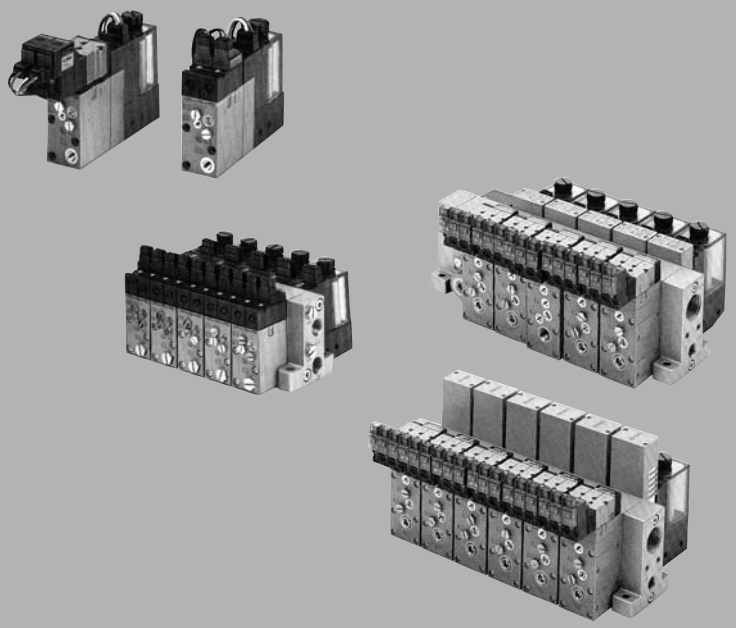

Easy and simple wiring

Connector type

Compact Pressure Switch
Series ZSE2/ISE2

How to Order

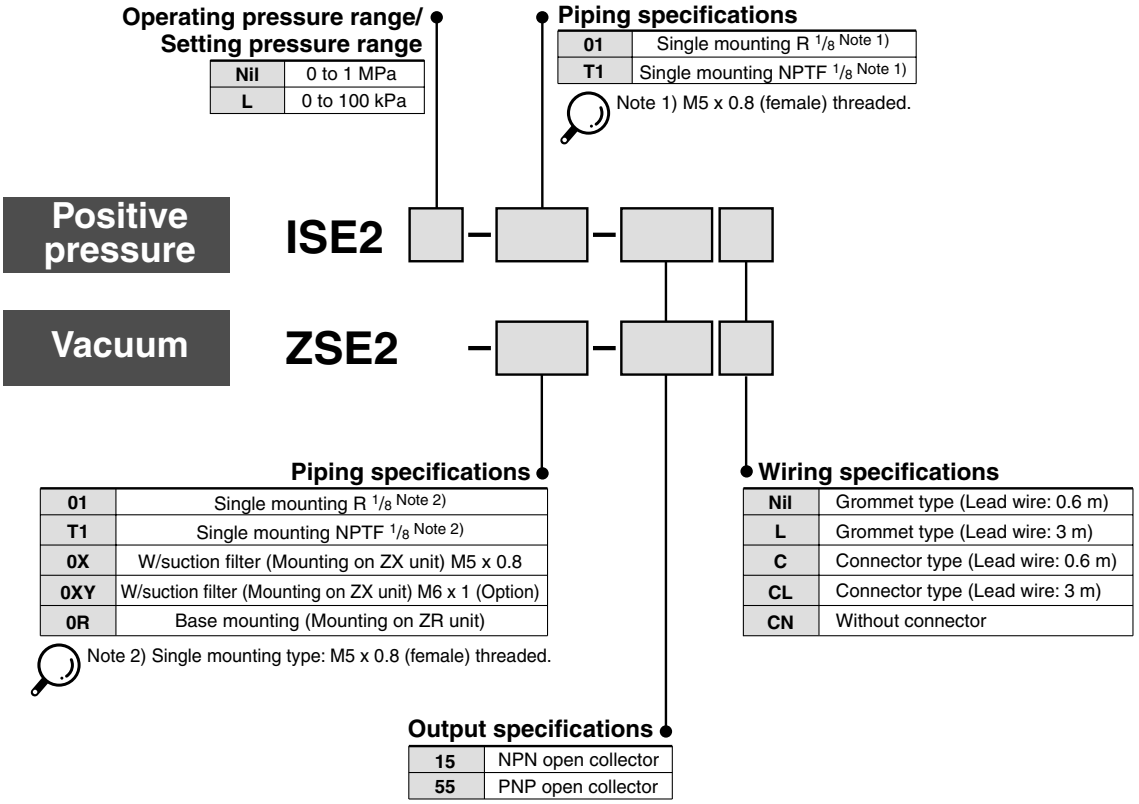

With Connector/How to Order

- Without lead wire (Connector 1 pc., Socket 3 pcs.) ·····**ZS-10-A**
- With lead wire ·····**ZS-10-5A-□**

Note) When ordering switch with 5 m long lead wire, indicate both part numbers.

Ex.) ZSE2-01-15CN·····1 pc.
ZS-10-5 A-50·····1 pc.

Lead wire length

Nil	0.6 m
30	3 m
50	5 m

Specifications

Model		ZSE2	ISE2L	ISE2
		For vacuum	For low pressure	For positive pressure
Rated pressure range/Set pressure range		0 to –101 kPa	0 to 100 kPa	0 to 1 MPa
Proof pressure		500 kPa		1.5 MPa
Fluid		Air/Non-corrosive, non-flammable gas		
Power supply voltage		12 to 24 VDC ±10%, Ripple (P-P) 10% or less (With power supply polarity protection)		
Current consumption		17 mA or less at 24 VDC		
Response time		5 ms or less		
Repeatability		±1% F.S. or less		
Resistance	Enclosure	IP40		
	Operating temperature range	Operating: 0 to 60°C, Stored: –10 to 60°C (With no condensation and no freezing)		
	Operating humidity range	Operating/Stored: 35 to 85%RH (With no condensation)		
	Vibration resistance	10 to 500 Hz at whichever is smaller of 1.5 mm amplitude or 98 m/s^2 acceleration, in X, Y, Z directions for 2 hrs. each (De-energized)		
	Impact resistance	980 m/s^2 in X, Y, Z directions, 3 times each (De-energized)		
Temperature characteristics(Based on 25°C)		±3% F.S. or less		
Withstand voltage		1000 VAC for 1 min. (between live parts and case)		
Insulation resistance		50 MΩ or more (at 500 VDC by megameter) between live parts and case		
Port size		01: R 1/8, M5 x 0.8 T1: NPTF 1/8, M5 x 0.8 0X: With suction filter (For mounting on ZX unit) 0R: Base mount type (For mounting on ZR unit)		
Mass		35 g (Including 0.6 m-Long lead wire)		
Lead wire	Grommet type	Oil-resistant vinyl cabtire code 3 cores, ø3.4, Cross section: 0.2 mm^2, Insulator O.D.: 1.1 mm		
	Connector type	Heat-resistant vinyl electric wire, 3-wire, Cross section: 0.31 mm^2, Insulator O.D.: 1.55 mm		
Standard		Compliant with CE marking		

Output Specifications

Model	–15	–55
Switch output	NPN open collector 30V, 80 mA or less	PNP open collector 80 mA or less
Residual voltage	1 V or less (With load current of 80 mA)	
Number of outputs	1	
Hysteresis	3% F.S. or less (Fixed)	
Indicator light	ON: when output is ON (Red)	
Trimmer adjustment	200°	

Calibration Procedure

- Set the ON-pressure by the pressure setting trimmer. Turning clockwise can set the high pressure/high vacuum pressure.

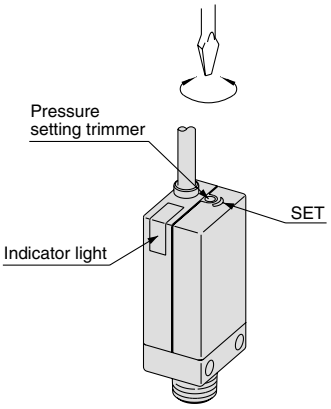

- Set the possible min. pressure for adsorption confirmation. If setting the pressure lower than that, switch becomes ON in case that adsorption is not completely done. If setting the pressure higher than that, switch does not become ON even though it may absorb workpieces.

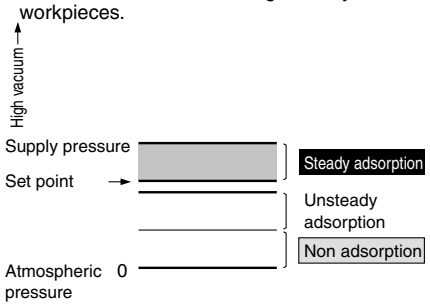

• Regarding the pressure setting

⚠Caution

Observe the following precautions for setting the vacuum pressure: Use your fingertips to gently turn the screwdriver. Do not use a screwdriver with a large grip or with a tip that does not fit into the trimmer groove because this could strip the groove.

Hysteresis

Hysteresis is the pressure difference between the ON and the OFF pressure of the output signal. The set pressure is the pressure selected to switch from OFF to ON condition.

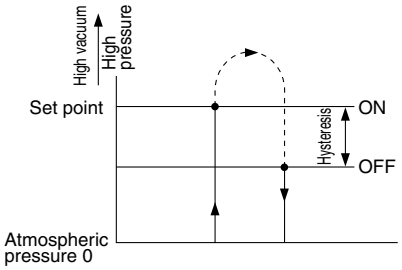

How to Use Connector

1. Attaching and detaching connectors

- When assembling the connector to the switch housing, push the connector straight onto the pins until the lever locks into the housing slot.
- When removing the connector from the switch housing, push the lever down to unlock it from the slot and then withdraw the connector straight off of the pin.

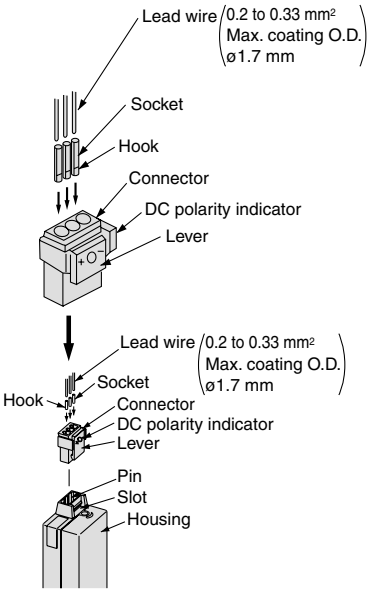

2. Crimping of lead wires and sockets

Strip 3.2 to 3.7 mm at the end of the lead wires, insert the ends of core wires evenly into the sockets, and then crimp with a crimping tool. When this is done, take care that the coverings of the lead wires do not enter the core wire crimping area.
(Crimping tool: model no. DXT170-75-1)

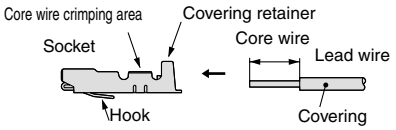

3. Attaching and detaching lead wires with sockets

- Attaching
  Insert the sockets into the square holes of the connector (with +, 0, – indication), and continue to push the sockets all the way in until they lock by hooking into the seats in the connector. (When they are pushed in their hooks open and they are locked automatically.) Then confirm that they are locked by pulling lightly on the lead wires.
- Detaching
  To detach a socket from a connector, pull out the lead wire while pressing the socket's hook with a stick having a thin tip (about 1 mm). If the socket will be used again, first spread the hook outward.

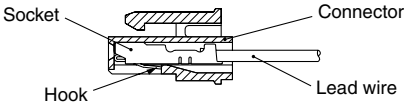

Internal Circuit and Wiring Example

-15 NPN open collector

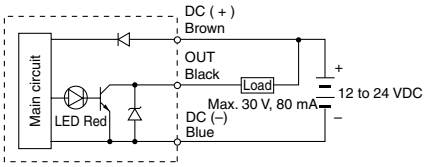

Electric circuit diagram

-55 PNP open collector

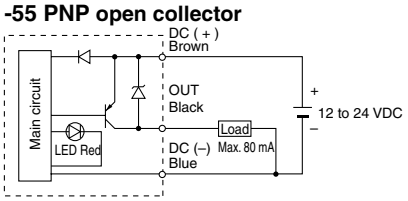

Electric circuit diagram

Connection example with a PLC at – common terminal

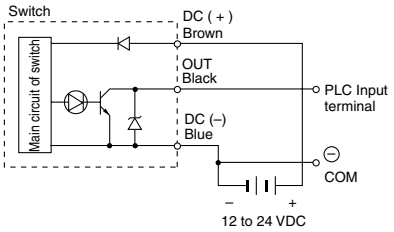

• Filter case

⚠Caution

1. Do not use with thinner, carbon tetrachloride, chloroform, acetate, aniline, cyclohexane, trichloroethylene, sulfuric acid, lactic acid and watermiscible cutting fluid (alkaline).
2. Operate it away from direct sunlight.

⚠Caution

Be sure to read before handling. Refer to front matters 58 and 59 for Safety Instructions and pages 687 to 691 for Pressure Switch Precautions.

Dimensions/With Suction Filter: ZSE2-0X□

Grommet type: ZSE2-0X□-15

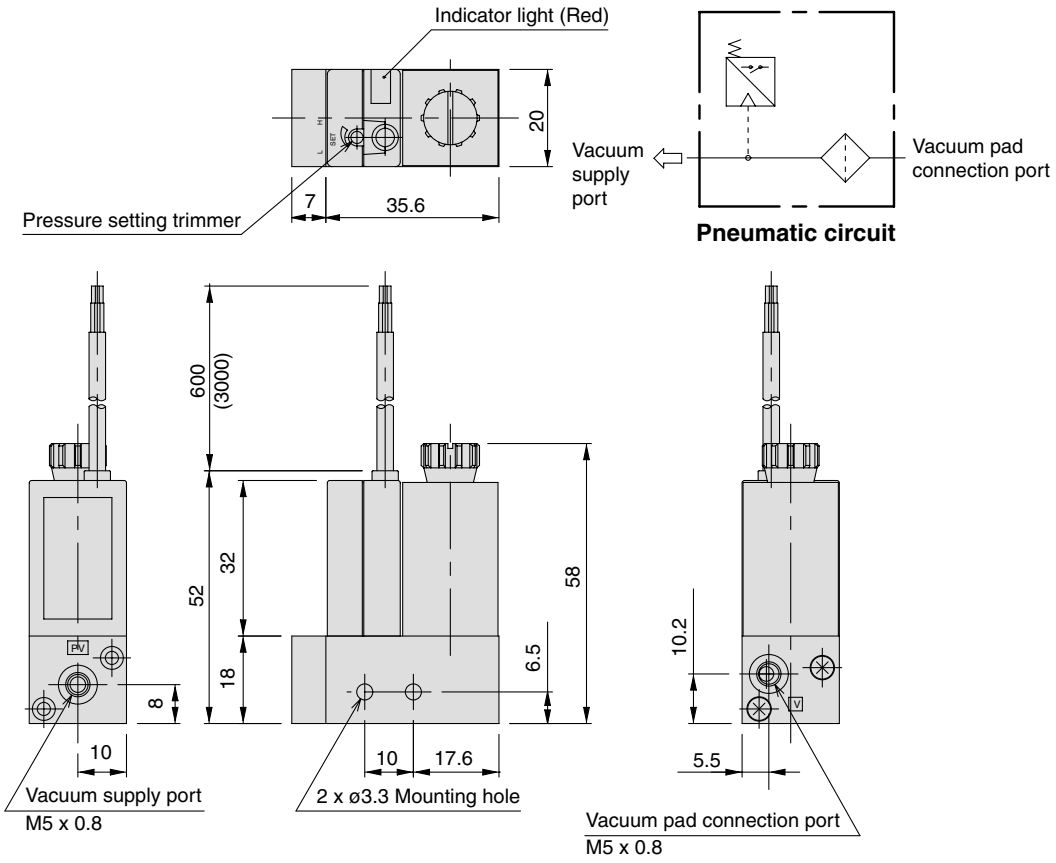

Connector type: ZSE2-0X□-15C

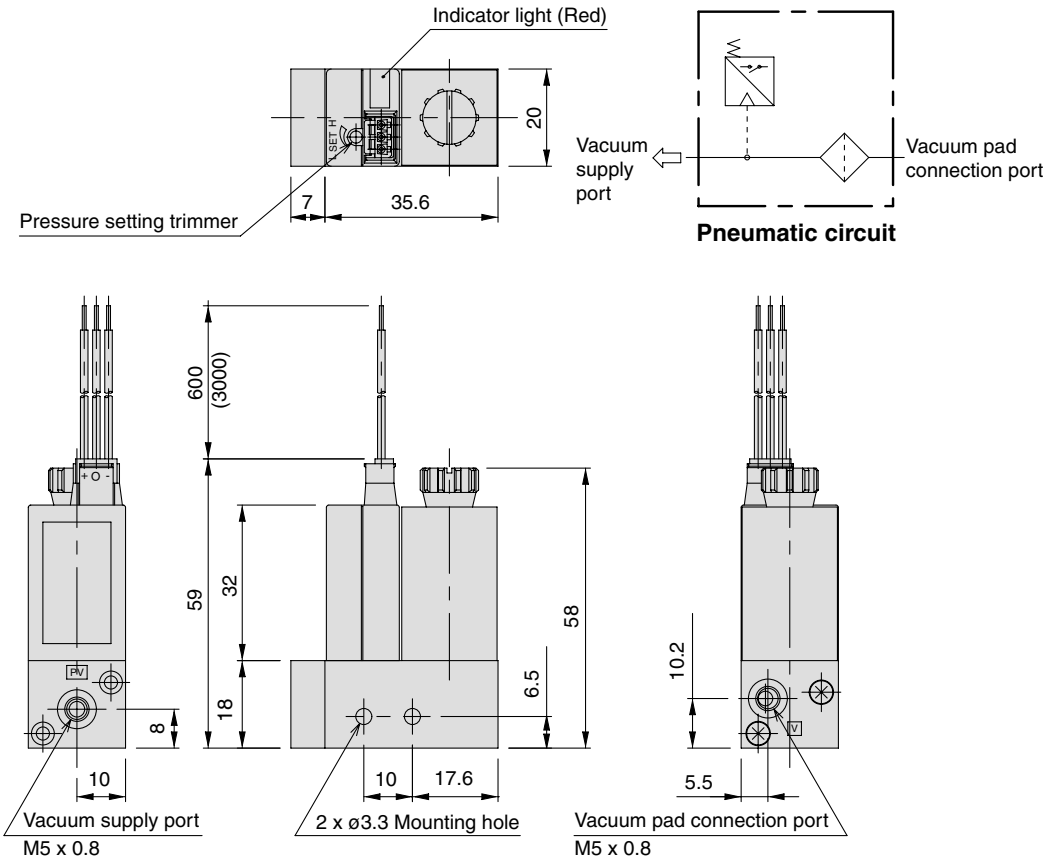

Dimensions/Standard Type: ZSE2-$\frac{01}{T1}$

Grommet type: ZSE2-$\frac{01}{T1}$-15

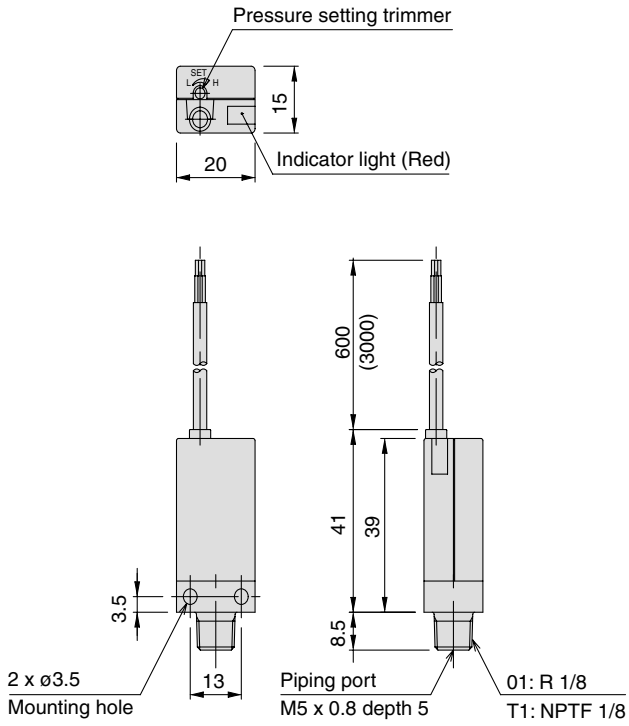

Connector type: ZSE2-$\frac{01}{T1}$-15C

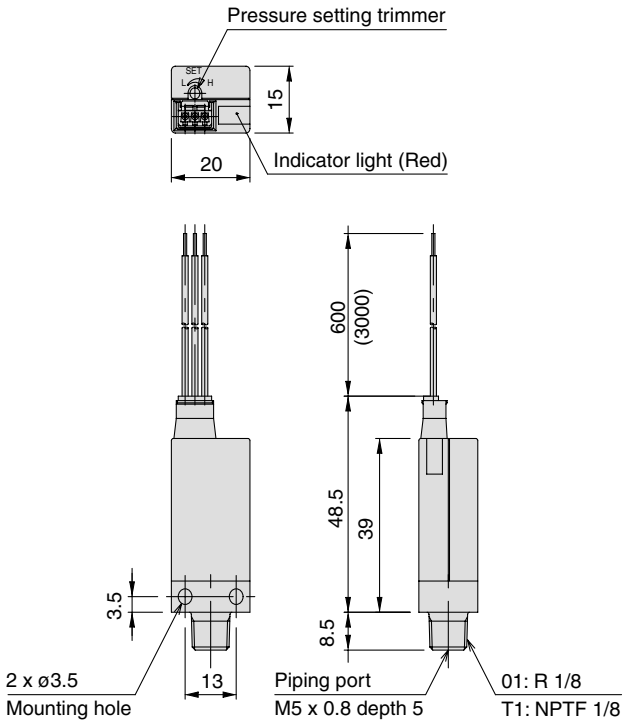

Dimensions/Base Mount Type: ZSE2-0R

Grommet type: ZSE2-0R-15

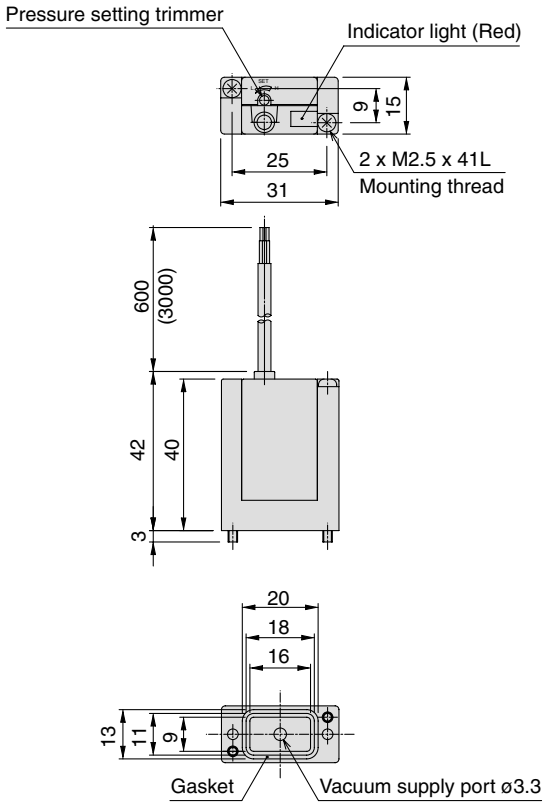

Connector type: ZSE2-0R-15C

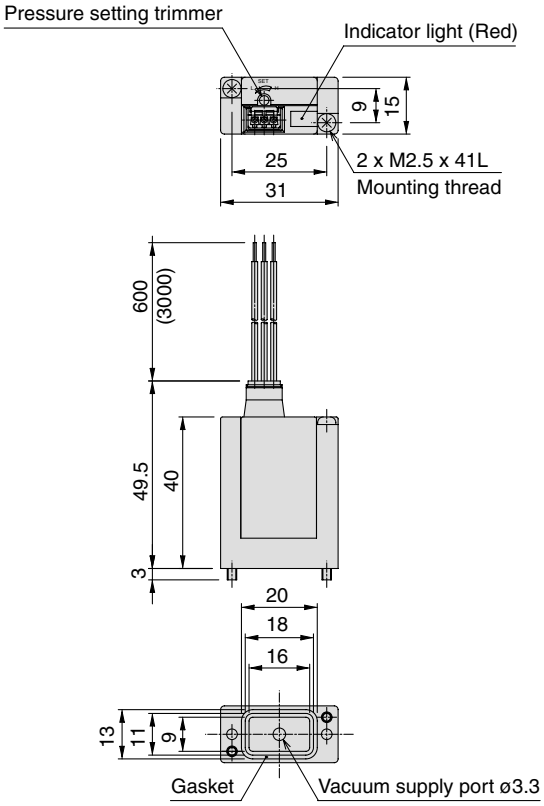

Dimensions: ISE2□-$\frac{01}{T1}$

Grommet type: ISE2-$\frac{01}{T1}$-15

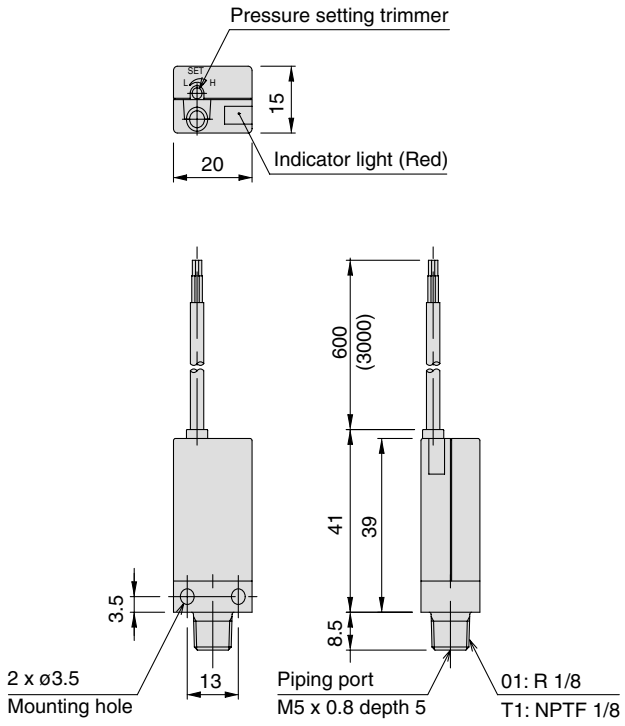

Connector type: ISE2-$\frac{01}{T1}$-15C

