# Remote Type Pressure Sensors/Pressure Sensor Controllers

## Series PSE



Compact Pneumatic Pressure Sensor **PSE530**

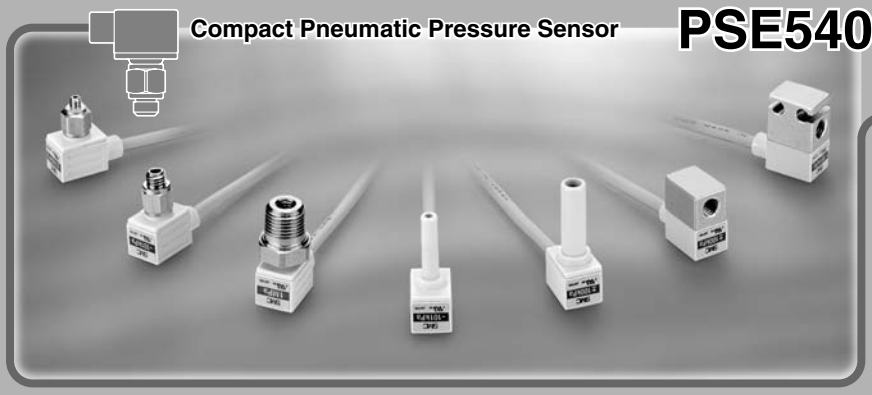

Compact Pneumatic Pressure Sensor **PSE540**



Low Differential Pressure Sensor **PSE550**



Pressure Sensor for General Fluids **PSE560**

**Multi-channel Digital Pressure Sensor Controller**

**PSE200**




**2-Color Display Digital Pressure Sensor Controller**

**PSE300**




**Connection type**



**DIN rail/Terminal block type**

**Current input specification is added.**

# Remote Type Pressure Sensors/

| | Pressure Sensors | | | | Controllers | |
|---|---|---|---|---|---|---|
| Model | PSE530 | PSE540 | PSE550 | PSE560 | PSE200 | PSE300 |
| |  |  |  |  |  |  |
| | P. 828 | P. 831 | P. 834 | P. 837 | P. 840 | P. 846 |
| **Basic Specifications** | | | | | | |
| Fluid | Air | | | General fluids | | |
| Rated pressure range (Minimum display) | | | | | | |
| Repeatability % (F.S.) | ±1 | ±0.2 | ±0.3 | ±0.2 | ±0.1 | |
| Voltage | 12 to 24 VDC | | | | | |
| No. of outputs for a switch | | | | | 5 | 2 |
| Analog output | 1 to 5 V | | 1 to 5 V<br>4 to 20 mA | | | 1 to 5 V<br>4 to 20 mA |
| Operating temperature °C | 0 to 50 | | | –10 to 60 | 0 to 50 | |
| **Functions** | | | | | | |
| Digital display | | | | | 1-color | 2-color |
| Enclosure | IP40 | | | IP65 | Front face IP65<br>Others IP40 | IP40 |
| Wiring specification | Connector | Grommet | | | Connector | |
| Major setting function | | | | | Key lock, Peak/Bottom values holding, Auto-preset, Auto-shift, Display calibration, Anti-chattering | |
| **Options** | | | | | | |
| Connection threads | M reducer | M<br>R, NPT reducer | Resin piping | R, NPT, Rc<br>URJ,TSJ* | | |
| Int'l standards | CE | CE, UL/CSA | | | CE | CE, UL/CSA |
| Wiring: e-con | | | | | | |
| Wiring: Flexible cable | | | | | | |
| Mounting: Direct | | | | | | |
| Mounting: With bracket | | | | | | |
| Mounting: Panel mount | | | | | | |
| Mounting: DIN rail | | | | | | |

* For URJ, TSJ, refer to Glossary of Terms and Technical Information on pages 878 to 879.

# Pressure Sensor Controllers

## Pressure Sensors/Series PSE5□□

| | Rated pressure range | PSE53□ | PSE54□ | PSE55□ | PSE56□ |
|---|---|---|---|---|---|
| | |  |  |  |  |
| Vacuum | −101 kPa to 0 | PSE531 | PSE541 | — | PSE561 |
| Compound pressure | −100 kPa to 100 kPa | PSE533 | PSE543 | — | PSE563 |
| Positive pressure | 0 to 100 kPa | PSE532 | — | — | — |
| Positive pressure | 0 to 500 kPa | — | — | — | PSE564 |
| Positive pressure | 0 to 1 MPa | PSE530 | PSE540 | — | PSE560 |
| Low differential pressure | 0 to 2 kPa | — | — | PSE550 | — |

## Pressure Sensor Controllers/Series PSE200/300



**PSE200** Input/Output specifications
- NPN 5 outputs + auto-shift input
- PNP 5 outputs + auto-shift input



**PSE300** Input/Output specifications
- NPN 2 outputs + 1–5 V outputs
- NPN 2 outputs + 4–20 mA outputs
- NPN 2 outputs + auto-shift input
- PNP 2 outputs + 1–5 V outputs
- PNP 2 outputs + 4–20 mA outputs
- PNP 2 outputs + auto-shift input

| Applicable pressure sensor model | | | | Setting/Display resolution | |
|---|---|---|---|---|---|
| PSE531 | PSE541 | — | PSE561 | 0.1 kPa | 0.1 kPa |
| PSE533 | PSE543 | — | PSE563 | 0.1 kPa | 0.2 kPa |
| PSE532 | — | — | — | 0.1 kPa | 0.1 kPa |
| — | — | — | PSE564 | — | 1 kPa |
| PSE530 | PSE540 | — | PSE560 | 0.001 MPa | 0.001 MPa |
| — | — | PSE550 | — | — | 0.01 kPa |

## Main Functions (For details, see pages 853 and 854.)

| | |
|---|---|
| Key lock | Locks the keys from functioning. |
| Peak/Bottom values holding | Displays the maximum and minimum values being set and can keep those values on the display. |
| Auto-preset | Able to set the pressure automatically. In the case of adsorption confirmation, it memorizes the pressure when adsorbed and released. By repeating several times, the optimum values are calculated automatically. |
| Auto-shift | Stable switch output is available even though the supply pressure may fluctuate. Automatically corrects the set value in accordance with the fluctuations in the supply pressure. |
| Display calibration | Able to adjust the displayed value (±5%) and justify distribution of the values displayed on respective pressure switch. |
| Anti-chattering | Prevents malfunction due to sharp pressure fluctuations. The detection of momentary pressure fluctuation as abnormal pressure can be prevented by changing the setting of the response time. |

# Compact Pneumatic Pressure Sensor

## Series PSE530

| Series | Rated pressure range |
|---|---|
| | −100 kPa / 0 / 100 kPa / 500 kPa / 1 MPa |
| PSE530 | 0 — 1 MPa |
| PSE531 | −101 kPa — 0 |
| PSE532 | 0 — 101 kPa |
| PSE533 | −101 kPa — 101 kPa |

### Connection

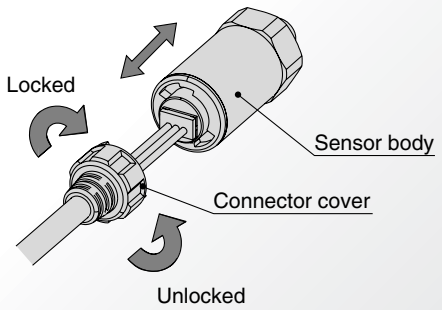


### Application examples

**Inspection of a radiator**

***Series PSE532 + PSE300***

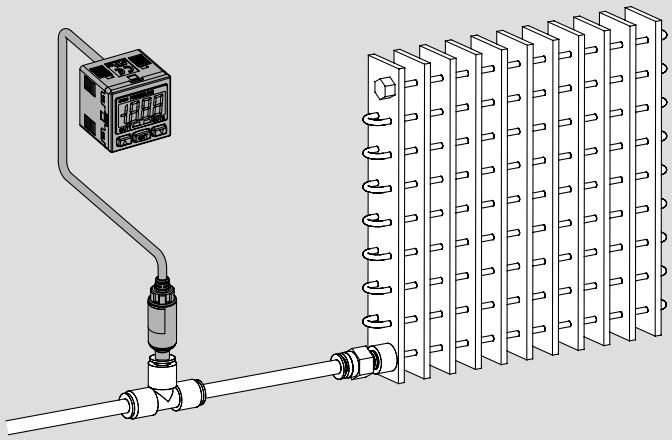

Low pressure sensor (PSE532-□) is used to detect minute differentiations. Auto-shift function reduces influence of fluctuations in the supply pressure.

*Applications*

# Pressure Sensor
# Series PSE530

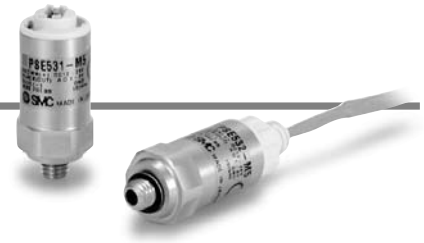

## How to Order

**PSE53 0 – M5 – □**

**Sensor range**

| | |
|---|---|
| **0** | Positive pressure [0 to 1 MPa] |
| **1** | Vacuum [0 to –101 kPa] |
| **2** | Low pressure [0 to 101 kPa] |
| **3** | Compound pressure [–101 to 101 kPa] |

**Port size**

| | |
|---|---|
| **M5** | M5 x 0.8 |
| **R06** | ø6 reducer |
| **R07** | 1/4 inch reducer |

**Option**

| | |
|---|---|
| **Nil** | None |
| **L** | Sensor cable (3 m) 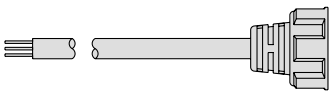 |
| **C2L** | Connector for pressure sensor controller (1 pc.) + Sensor cable (3 m) 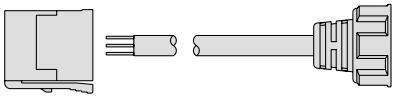 |

Note) At the factory, the connector is not attached to the cable, but packed together with it for shipment.

## Option

**When only optional parts are required, order using the part numbers listed below.**

| Description | Part no. | Note |
|---|---|---|
| Connector for pressure sensor controller | ZS-28-C | 1 pc. per set |
| Sensor cable | ZS-26-F | Cable length: 3 m |
| Connector for pressure sensor controller + Sensor cable | ZS-26-J | Cable length: 3 m<br>The connector is not attached to the cable at the time of shipment. |

## Specifications

| Model | | **PSE530** (Positive pressure) | **PSE531** (Vacuum) | **PSE532** (Low pressure) | **PSE533** (Compound pressure) |
|---|---|---|---|---|---|
| **Rated pressure range** | | 0 to 1 MPa | 0 to –101 kPa | 0 to 101 kPa | –101 to 101 kPa |
| **Extension analog output range** | | –0.1 to 0 MPa | 10.1 to 0 kPa | –10.1 to 0 kPa | — |
| **Proof pressure** | | 1.5 MPa | 500 kPa | | |
| **Applicable fluid** | | Air/Non-corrosive gas/Non-flammable gas | | | |
| **Power supply voltage** | | 12 to 24 VDC ±10%, Ripple (p-p) 10% or less (with power supply polarity protection) | | | |
| **Current consumption** | | 15 mA or less (with no load) | | | |
| **Output specification** | | Analog output 1 to 5 V (with rated pressure range), 0.6 to 1 V (with extension analog output range), Output impedance: Approx. 1 kΩ | | | |
| **Accuracy (Ambient temperature at 25°C)** | | ±2% F.S. or less (with rated pressure range), ±5% F.S. or less (with extension analog output range) | | | |
| **Linearity** | | ±1% F.S. or less | | | |
| **Repeatability** | | ±1% F.S. or less | | | |
| **Power supply voltage effect** | | ±1% F.S. or less based on the analog output at 18 V ranging from 12 to 24 VDC | | | |
| **Environmental resistance** | **Enclosure** | IP40 | | | |
| | **Temperature range** | Operating: 0 to 50°C; Stored: –10 to 70°C (No freezing or condensation) | | | |
| | **Withstand voltage** | 1000 VAC, 50/60Hz for 1 minute between live parts and case | | | |
| | **Insulation resistance** | 5 MΩ or more between live parts and case (at 500 VDC Mega) | | | |
| | **Vibration resistance** | 10 to 500 Hz 1.5 mm amplitude or 98 m/s² acceleration, X, Y, Z directions for 2 hours each (De-energized) | | | |
| | **Impact resistance** | 980 m/s² in X, Y, Z directions, 3 times each (De-energized) | | | |
| **Temperature characteristics** | | ±2% F.S. or less (Based on 25°C) | | | |
| **Sensor cable/Option** | | Halogen-free heavy-duty cable, 3 cores, ø2.7, 3 m, Conductor area: 0.15 mm², Insulator O.D.: 0.8 mm | | | |
| **Standards** | | Compliant with CE marking | | | |

### Piping Specifications

| Model | | **M5** | **R06** | **R07** |
|---|---|---|---|---|
| **Port size** | | M5 x 0.8 male thread | ø6 reducer type | 1/4 inch reducer type |
| **Wetted parts material** | | Pressure sensor: Silicon, O-ring: NBR | | |
| | | Body: Stainless steel 304 | Body: PBT | |
| **Mass** | **With sensor cable (3 m)** | 41 g | 38 g | |
| | **Without sensor cable** | 7 g | 3.8 g | |

## Internal Circuit

**PSE53□**
Voltage output type
1 to 5 V
Output impedance
Approx. 1 kΩ

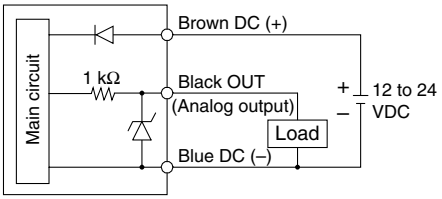


## Analog Output

**1 to 5 VDC**

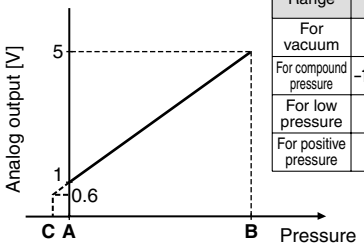


| Range | Rated pressure range | A | B | C |
|---|---|---|---|---|
| For vacuum | 0 to −101 kPa | 0 | −101 kPa | 10.1 kPa |
| For compound pressure | −101 kPa to 101 kPa | −101 kPa | 101 kPa | — |
| For low pressure | 0 to 101 kPa | 0 | 101 kPa | −10.1 kPa |
| For positive pressure | 0 to 1 MPa | 0 | 1 MPa | −0.1 MPa |

## Dimensions

### PSE53□-M5

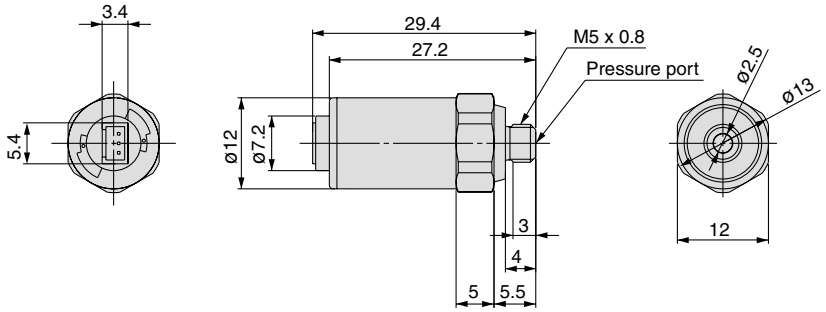


### PSE53□-R06 / R07

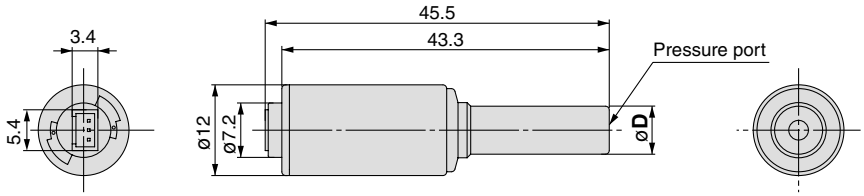


(mm)

| Model | Applicable fitting size (**D**) |
|---|---|
| **PSE53□-R06** | 6 |
| **PSE53□-R07** | 1/4" |

**With sensor cable**

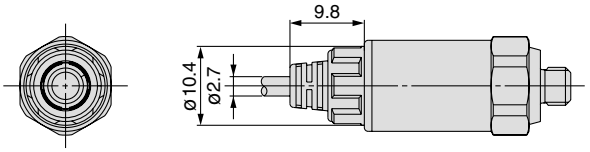

# Compact Pneumatic Pressure Sensor

## Series PSE540

| Series | Rated pressure range |
|---|---|
| | −100 kPa 0 100 kPa 500 kPa 1 MPa |
| PSE540 | 0 — 1 MPa |
| PSE541 | −101 kPa — 0 |
| PSE543 | −100 kPa — 100 kPa |

- **Mass: 2.9 g**
- **Head size: 9.6 x 20.8 x 18 mm**

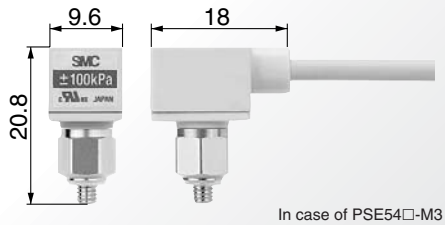


In case of PSE54□-M3



### Application examples

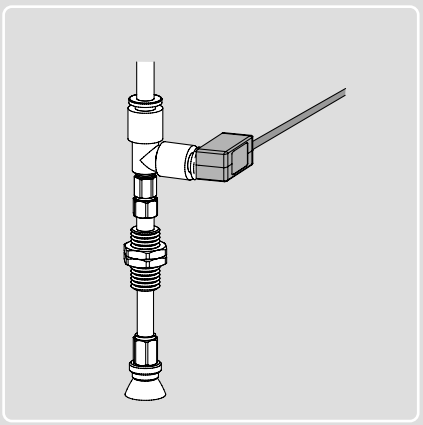

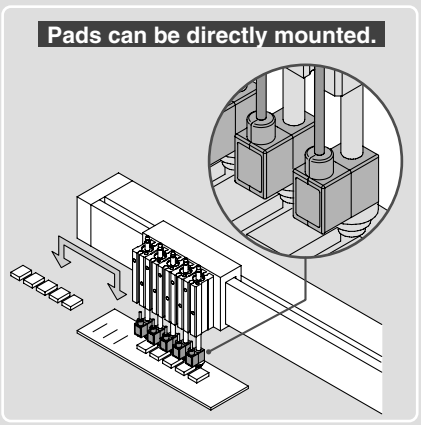


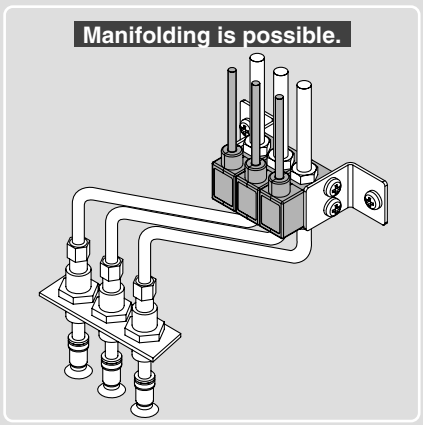


*Applications*

# Compact Pneumatic Pressure Sensor

# Series PSE540

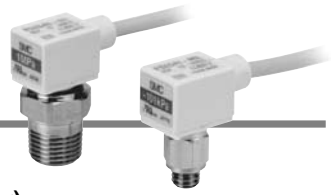

## How to Order

**Sensor range**

| | |
|---|---|
| 0 | Positive pressure [0 to 1 MPa] |
| 1 | Negative pressure [0 to –101 kPa] |
| 3 | Compound pressure [–100 to 100 kPa] |

**Accuracy**

| | |
|---|---|
| Nil | ±2% F.S. |
| A | ±1% F.S. |

**Option (Connector)**

| | |
|---|---|
| Nil | None |
| C2 | Connector for pressure sensor controller (1 pc.) 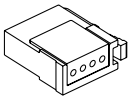 |

**PSE54 1 □ – M3 – □**

**Port size**

| | | |
|---|---|---|
| M3 | M3 x 0.5 |  |
| M5 | M5 x 0.8 | |
| 01 | R 1/8 (with M5 female thread) |  |
| N01 | NPT 1/8 (with M5 female thread) | |
| R04 | ø4 reducer |  |
| R06 | ø6 reducer | |

| | | |
|---|---|---|
| IM5 | M5 female thread, through type |  |
| IM5H | M5 female thread, through type (with mounting hole) |  |

Note) At the factory, the connector is not attached to the cable, but packed together with it for shipment.

## Option

| Description | Part no. | Note |
|---|---|---|
| Connector for pressure sensor controller | ZS-28-C | 1 pc. |

## Specifications

| Model | | PSE540 | PSE541 | PSE543 |
|---|---|---|---|---|
| **Rated pressure range** | | 0 to 1 MPa | 0 to –101 kPa | –100 to 100 kPa |
| **Extension analog output range** | | –0.1 to 0 MPa | 10.1 to 0 kPa | — |
| **Proof pressure** | | 1.5 MPa | 500 kPa | |
| **Applicable fluid** | | Air/Non-corrosive gas/Non-flammable gas | | |
| **Power supply voltage** | | 12 to 24 VDC±10%, Ripple (p-p) 10% or less (with power supply polarity protection) | | |
| **Current consumption** | | 15 mA or less | | |
| **Output specification** | | Analog output 1 to 5 V (with rated pressure range), 0.6 to 1 V (with extension analog output range), Output impedance: Approx. 1 kΩ | | |
| **Accuracy (Ambient temperature at 25°C)** | | PSE54□: ±2% F.S. or less (with rated pressure range), ±5% F.S. or less (with extension analog output range)<br>PSE54□A: 1% F.S. or less (with rated pressure range), ±3% F.S. or less (with extension analog output range) | | |
| **Linearity** | | ±0.7% F.S. or less | ±0.4% F.S. or less | |
| **Repeatability** | | ±0.2% F.S. or less | | |
| **Power supply voltage effect** | | ±0.8% F.S. or less | | |
| **Environmental resistance** | **Enclosure** | IP40 | | |
| | **Operating temperature range** | Operating: 0 to 50°C, Stored: –20 to 70°C (No freezing or condensation) | | |
| | **Operating humidity range** | Operating/Stored: 35 to 85% RH (No condensation) | | |
| | **Withstand voltage** | 1000 VAC, 50/60 Hz for 1 minute between live parts and case | | |
| | **Insulation resistance** | 50 MΩ or more between live parts and case (at 500 VDC Mega) | | |
| | **Vibration resistance** | 10 to 500 Hz at whichever is smaller of 1.5 mm amplitude or 98 m/s$^2$ acceleration, in X, Y, Z directions, for 2 hours each (De-energized) | | |
| | **Impact resistance** | 980 m/s$^2$ in X, Y, Z directions, 3 times each (De-energized) | | |
| **Temperature characteristics** | | ±2% F.S. or less (Based on 25°C) | | |
| **Standards** | | Compliant with CE marking, UL (CSA) | | |

### Piping Specifications

| Model | | M3 | M5 | 01 | N01 | R04 | R06 | IM5 | IM5H |
|---|---|---|---|---|---|---|---|---|---|
| **Port size** | | M3 x 0.5 | M5 x 0.8 | R 1/8<br>M5 x 0.8 | NPT 1/8<br>M5 x 0.8 | ø4 reducer | ø6 reducer | M5 female thread, through type | M5 female thread, through type (with mounting hole) |
| **Material** | **Case** | Resin case: PBT<br>Fitting: Stainless steel 303 | | Resin case: PBT<br>Fitting: C3604BD | | PBT | | Resin case: PBT<br>Fitting: A6063S-T5 | |
| | **Pressure sensing section** | Pressure sensor: Silicon, O-ring: NBR | | | | | | | |
| **Sensor cable** | | Oil proof heavy-duty vinyl cable (ellipse), 3 cores, 2.7 x 3.2, 3 m, Conductor area: 0.15 mm$^2$, Insulator O.D.: 0.9 mm | | | | | | | |
| **Mass** | **With sensor cable** | 42.4 g | 42.7 g | 49.3 g | | 41.4 g | 41.6 g | 43.3 g | 44.1 g |
| | **Without sensor cable** | 2.9 g | 3.2 g | 9.8 g | | 1.9 g | 2.1 g | 3.8 g | 4.6 g |

## Internal Circuit

**PSE54□**
Voltage output type
1 to 5 V
Output impedance
Approx. 1 kΩ

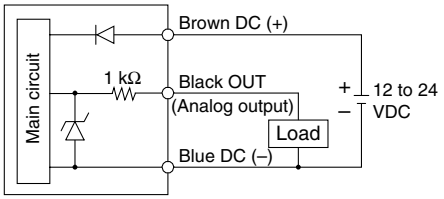


## Analog Output

**1 to 5 VDC**

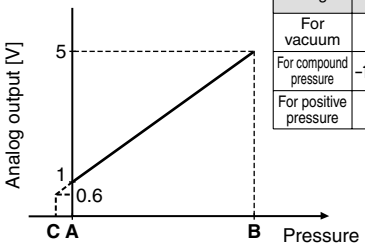


| Range | Rated pressure range | A | B | C |
|---|---|---|---|---|
| For vacuum | 0 to −101kPa | 0 | −101 kPa | 10.1 kPa |
| For compound pressure | −100 kPa to 100 kPa | −100 kPa | 100 kPa | — |
| For positive pressure | 0 to 1 MPa | 0 | 1 MPa | −0.1 MPa |

## Dimensions

### PSE54□-M3 / M5



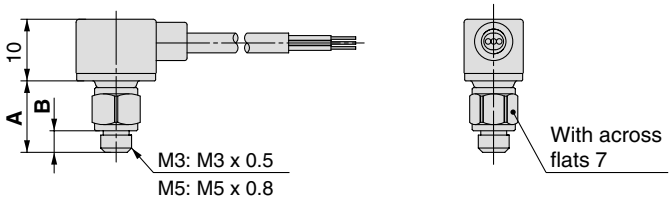


(mm)

| | PSE54□-M3 | PSE54□-M5 |
|---|---|---|
| A | 10.8 | 11.5 |
| B | 3 | 3.5 |

### PSE54□-R04 / R06



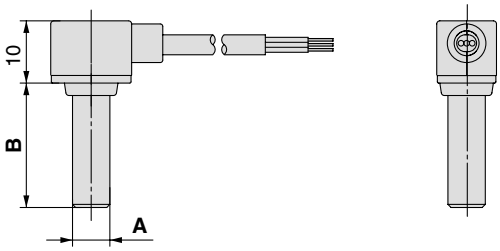


(mm)

| | PSE54□-R04 | PSE54□-R06 |
|---|---|---|
| A | ø4 | ø6 |
| B | 18 | 20 |

### Common Dimensions

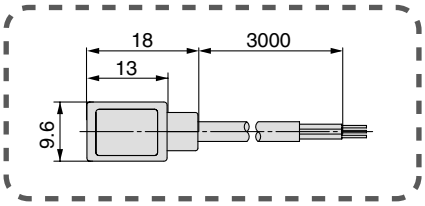


### PSE54□-IM5



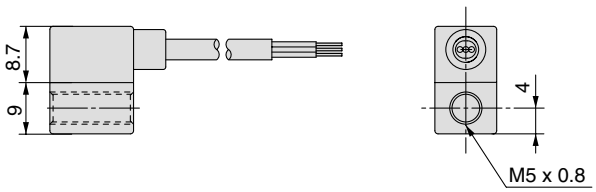


### PSE54□-01 / N01



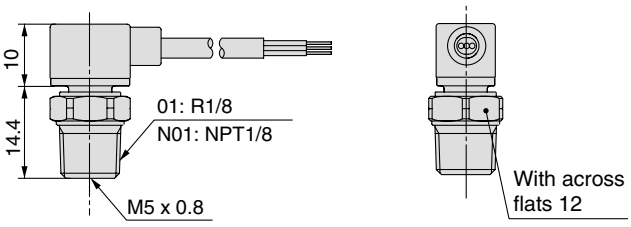


### PSE54□-IM5H



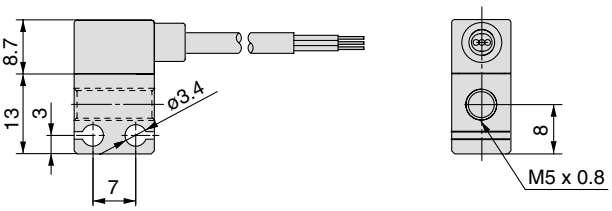

# Low Differential Pressure Sensor

## Series PSE550

| Series | Rated pressure range |
|---|---|
| | 0 — 1 kPa — 2 kPa |
| PSE550 | 0 — 2 kPa |

**With LED display for confirming energization**




**2 mounting types**

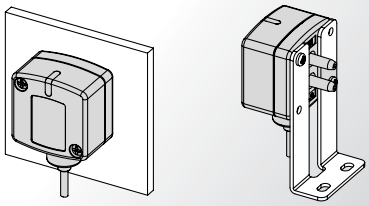

Mounting directly

Mounting with bracket

**Accuracy**
**±1% F.S.**

**Proof pressure**
**65 kPa**

## Application examples

**Flow control**
*Series* ***PSE550***

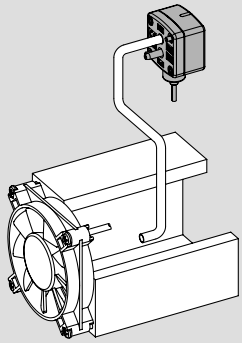

Can control air flow by monitoring the flow rate inside the duct.

**Filter clogging monitoring**
*Series* ***PSE550***

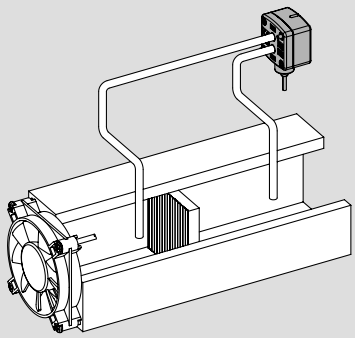

Can control filtration and replacement periods by monitoring the clogging of the filter.

**Liquid level detection**
*Series* ***PSE550***

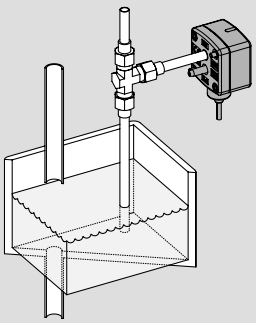

Can detect the liquid level through changes in the purge pressure.

*Applications*

# Low Differential Pressure Sensor
# Series PSE550



## How to Order

**PSE550 – □ – □ □**

**Output specifications**

| | |
|---|---|
| **Nil** | Voltage output type 1 to 5 V |
| **28** | Current output type 4 to 20 mA |

**Option 2 (Connector)**

| | |
|---|---|
| **Nil** | None |
| **C2** | Connector for pressure sensor controller (1 pc.) 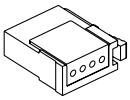 |

~~Note 1) Current output type cannot be connected to the PSE 200 and the PSE 300 series.~~

Note 2) At the factory, the connector is not attached to the cable, but packed together with it for shipment.

**Option 1 (Bracket)**

| | |
|---|---|
| **Nil** | None |
| **A** | Bracket 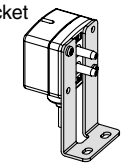 |

Note) The bracket is not attached in the factory, but packed together for shipment.

## Option

| Description | Part no. | Note |
|---|---|---|
| Bracket | ZS-30-A | With M3 x 5L (2 pcs.) |
| Connector for pressure sensor controller | ZS-28-C | 1 pc. |

## Specifications

| Model | | PSE550 | PSE550-28 |
|---|---|---|---|
| **Rated differential pressure range** | | 0 to 2 kPa | |
| **Operating pressure range** | | –50 to 50 kPa Note) | |
| **Extension analog output range** | | –0.2 to 0 kPa | — |
| **Proof pressure** | | 65 kPa | |
| **Applicable fluid** | | Air/Non-corrosive gas/Non-flammable gas | |
| **Power supply voltage** | | 12 to 24 VDC±10%, Ripple (p-p) 10% or less (with power supply polarity protection) | |
| **Current consumption** | | 15 mA or less | — |
| **Output specification** | | Analog output: 1 to 5 VDC (within rated differential pressure range)<br>0.6 to 1 VDC (with extension analog output range)<br>Output impedance: Approx. 1 kΩ | Analog output: 4 to 20 mADC (within rated differential pressure range)<br>Allowable load impedance: 500 Ω or less (at 24 VDC)<br>100 Ω or less (at 12 VDC) |
| **Accuracy (Operating temperature at 25°C)** | | ±1% F.S. or less (with rated pressure range), ±3% F.S. or less (with extension analog output range) | |
| **Linearity** | | ±0.5% F.S. or less | |
| **Repeatability** | | ±0.3% F.S. or less | |
| **Indication light** | | Orange light is turned on. (When energized) | |
| **Environmental resistance** | **Enclosure** | IP40 | |
| | **Operating temperature range** | Operating: 0 to 50°C, Stored: –20 to 70°C (No freezing or condensation) | |
| | **Operating humidity range** | Operating/Stored: 35 to 85% RH (No condensation) | |
| | **Withstand voltage** | 1000 VAC, 50/60 Hz for 1 minute between live parts and case | |
| | **Insulation resistance** | 50 MΩ or more between live parts and case (at 500 VDC Mega) | |
| | **Vibration resistance** | 10 to 150 Hz at whichever is smaller of 1.5 mm amplitude or 100 m/s$^2$ acceleration, in X, Y, Z directions, for 2 hours each (De-energized) | |
| | **Impact resistance** | 300 m/s$^2$ in X, Y, Z directions, 3 times each (De-energized) | |
| **Temperature characteristics** | | ±3% F.S. or less (Based on 25°C) | |
| **Port size** | | ø4.8 (ø4.4 in the end) resin piping<br>(Applicable to I.D. ø4 air tubing) | |
| **Wetted parts material** | | Resin pipe: Nylon, Piston area of sensor: Silicon | |
| **Sensor cable** | | Oil proof heavy-duty vinyl cable (ellipse), 3 cores, 2.7 x 3.2, 3 m<br>Conductor area: 0.15 mm$^2$, Insulator O.D.: 0.9 mm | Oil proof heavy-duty vinyl cable (ellipse), 2 cores, 2.7 x 3.2, 3 m<br>Conductor area: 0.15 mm$^2$, Insulator O.D.: 0.9 mm |
| **Mass** | **With sensor cable** | 75 g | |
| | **Without sensor cable** | 35 g | |
| **Standards** | | Compliant with CE marking, UL (CSA) | |

Note) Can detect differential pressure from 0 to 2 kPa within the range of –50 to 50 kPa.

## Internal Circuit

**PSE550**
Voltage output type
1 to 5 V
Output impedance
Approx. 1 kΩ

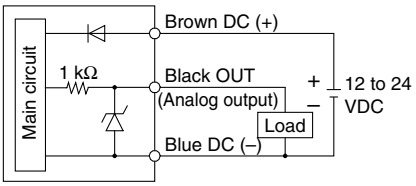


**PSE550-28**
Current output type
4 to 4 20 mA
Allowable load impedance
500 Ω or less (at 24 VDC)
100 Ω or less (at 12 VDC)

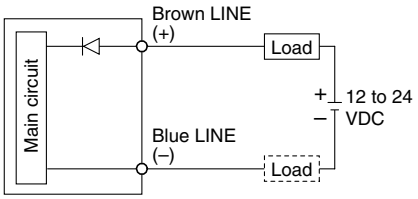


∗ Install the load either on the LINE (+) or LINE (–) side.

## Analog Output

**1 to 5 VDC**

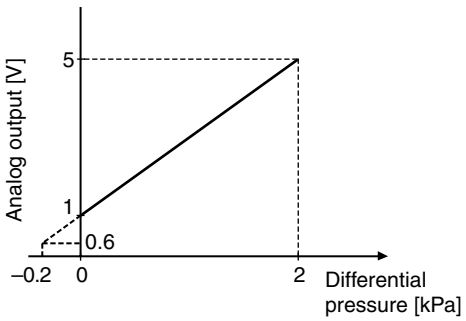


**4 to 20 mADC**

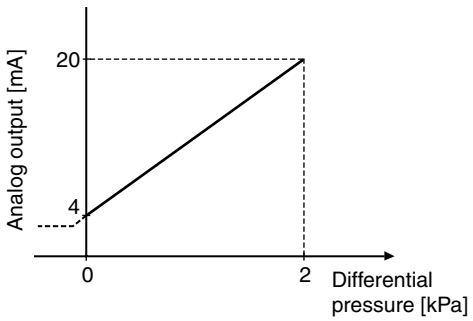


## Dimensions

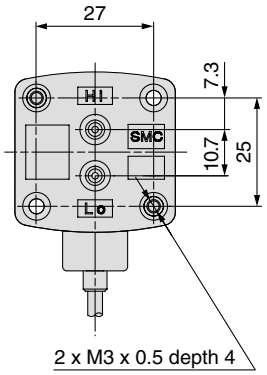


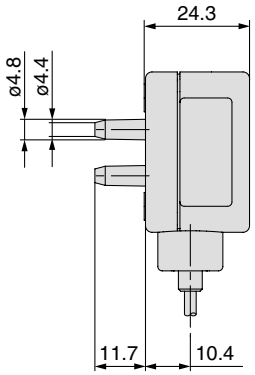


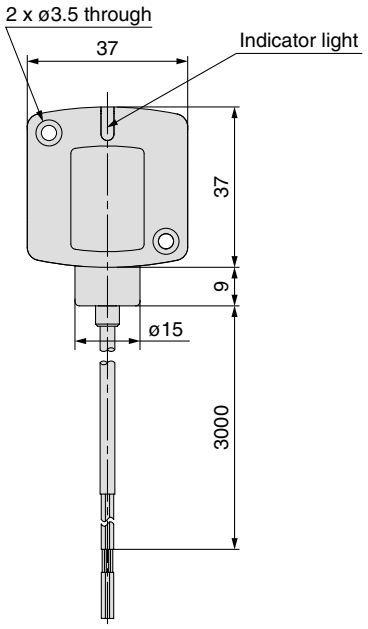


### With bracket

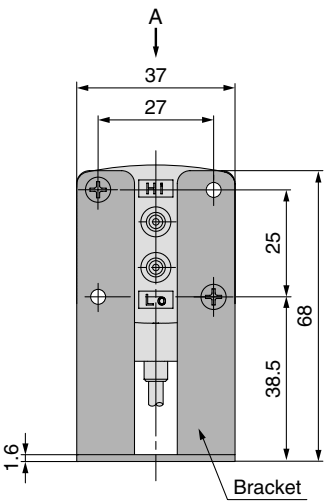


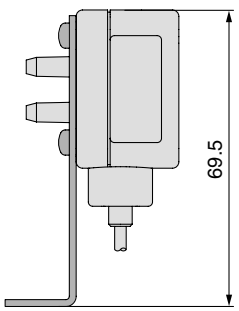


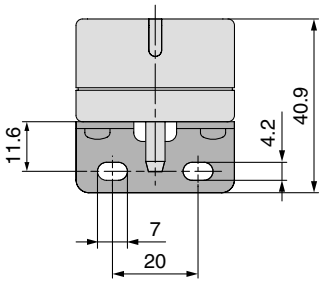


**A View**

# Pressure Sensor For General Fluids

## Series PSE560

| Series | Rated pressure range |
|---|---|
| | −100 kPa / 0 / 100 kPa / 500 kPa / 1 MPa |
| PSE560 | 0 to 1 MPa |
| PSE561 | −101 kPa to 0 |
| PSE563 | −100 kPa to 100 kPa |
| PSE564 | 0 to 500 kPa |

**Applicable fluids example**

- Argon
- Air-containing drainage
- Ammonia
- Freon
- Nitrogen
- Hydraulic oil
- Silicon oil
- Water
- Carbon dioxide
- Lubricant
- Fluorocarbon
- Air

Wetted parts material: Stainless steel 316L

IP65

Copper-free Fluorine-free

Oil-free (Single diaphragm construction)

**Variation**

| Port type | Thread type | Special fitting type for semiconductors |
|---|---|---|
| Port size | R 1/8, R 1/4, Rc 1/8, NPT 1/8, NPT 1/4 | URJ 1/4, TSJ 1/4* |
| Leakage | 1 x $10^{-5}$ Pa·m³/s | 1 x $10^{-10}$ Pa·m³/s |
| Analog output | 1 to 5 V voltage output | |
| | 4 to 20 mA current output | |

* For URJ1/4, TSJ1/4, refer to Glossary of Terms and Technical Information on pages 878 to 879.

### Application examples

**Washing line**

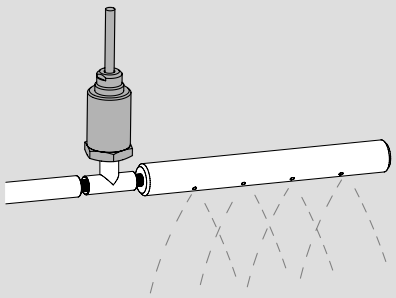

**Verification of caulking by hydraulic cylinders**

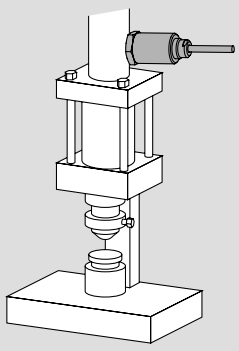

**Adsorption confirmation of work pieces with moisture**

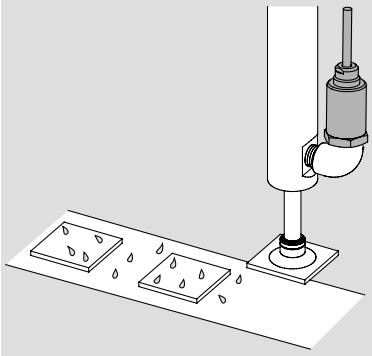

Note: When vacuum is released, take precautions to avoid water collision with rush inertia. (An adapter with throttle (ZS-31-X175) is available to prevent water collision with rush inertia.) (Refer to "About intrusion of water or drainage" on page 857 for details.)

Applications

# Pressure Sensor
# For General Fluids
# Series PSE560

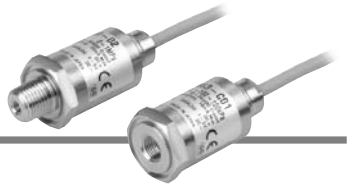

## How to Order

**Sensor range**

| | |
|---|---|
| **0** | Positive pressure [0 to 1 MPa] |
| **1** | Vacuum [0 to –101 kPa] |
| **3** | Compound pressure [–100 to 100 kPa] |
| **4** | Positive pressure [0 to 500 kPa] |

**Option (Connector)**

| | |
|---|---|
| **Nil** | None |
| **C2** | Connector for pressure sensor controller (1 pc.) 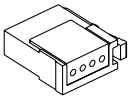 |

Note 1) Current output type cannot be connected to the PSE200 series.
Note 2) At the factory, the connector is not attached to the cable, but packed together with it for shipment.

**PSE56 [0] – [01] – [ ] – [ ]**

**Port size**

| | |
|---|---|
| **01** | R 1/8 (with M5 female thread) |
| **02** | R 1/4 (with M5 female thread) |
| **C01** | Rc 1/8 |
| **N01** | NPT 1/8 (with M5 female thread) |
| **N02** | NPT 1/4 (with M5 female thread) |
| **A2** | URJ 1/4 |
| **B2** | TSJ 1/4 |

**Output specifications**

| | |
|---|---|
| **Nil** | Voltage output type 1 to 5 V |
| **28** | Current output type 4 to 20 mA |

## Option

| Description | Part no. | Note |
|---|---|---|
| Connector for pressure sensor controller | ZS-28-C | 1 pc. |
| Adapter with throttle Rc 1/4 | ZS-31-X175 | 1 pc. |
| Adapter with throttle NPT 1/4 | ZS-31-X186 | 1 pc. |
| Adapter with throttle Rc 1/8 | ZS-31-X188 | 1 pc. |
| Adapter with throttle NPT 1/8 | ZS-31-X189 | 1 pc. |

## Specifications

| Model | **PSE560** (Positive pressure) | **PSE561** (Vacuum) | **PSE563** (Compound pressure) | **PSE564** (Positive pressure) |
|---|---|---|---|---|
| **Rated pressure range** | 0 to 1 MPa | 0 to –101 kPa | –100 to 100 kPa | 0 to 500 kPa |
| **Extension analog output range** | –0.1 to 0 MPa | 10.1 to 0 kPa | — | –50 to 0 kPa |
| **Proof pressure** | 1.5 MPa | 500 kPa | 500 kPa | 750 kPa |

| Model | | **PSE56□-□** | **PSE56□-□-28** |
|---|---|---|---|
| **Applicable fluid** | | Liquid or gas that will not corrode stainless steel 316L | |
| **Power supply voltage** | | 12 to 24 VDC ±10%, Ripple (p-p) 10% or less (with power supply polarity protection) | |
| **Current consumption** | | 10 mA or less | — |
| **Output specification** | | Analog output: 1 to 5 V (within rated differential pressure range)<br>0.6 to 1 V (with extension analog output range)<br>Output impedance: Approx. 1 kΩ | Analog output: 4 to 20 mADC (within rated differential pressure range)<br>Allowable load impedance: 500 Ω or less (at 24 VDC)<br>100 Ω or less (at 12 VDC) |
| **Accuracy (Ambient temperature at 25°C)** | | ±1% F.S. or less (with rated pressure range), ±3% F.S. or less (with extension analog output range) | |
| **Linearity** | | ±0.5% F.S. or less | |
| **Repeatability** | | ±0.2% F.S. or less | |
| **Power supply voltage effect** | | ±0.3% F.S. or less | |
| **Environmental resistance** | **Enclosure** | IP65 | |
| | **Operating temperature range** | Operating: –10 to 60°C, Stored: –20 to 70°C (No freezing or condensation) | |
| | **Operating humidity range** | Operating/Stored: 35 to 85% RH (No condensation) | |
| | **Withstand voltage** | 250 VAC for 1 minute between live parts and case | |
| | **Insulation resistance** | 50 MΩ or more between live parts and case (at 50 VDC Mega) | |
| | **Vibration resistance** | 10 to 150 Hz at whichever is smaller of 1.5 mm amplitude or 20 m/s$^2$ acceleration, in X, Y, Z directions, for 2 hours each (De-energized) | |
| | **Impact resistance** | 500 m/s$^2$ in X, Y, Z directions, 3 times each (De-energized) | |
| **Temperature characteristics** | | ±2% F.S. or less (0 to 50°C: Based on 25°C), ±3% F.S. or less (–10 to 60°C: Based on 25°C) | |
| **Standards** | | Compliant with CE marking, UL (CSA) | |

### Piping Specifications

| Model | | **01** | **02** | **N01** | **N02** | **C01** | **A2** | **B2** |
|---|---|---|---|---|---|---|---|---|
| **Port size** | | R 1/8<br>M5 x 0.8 | R 1/4<br>M5 x 0.8 | NPT 1/8<br>M5 x 0.8 | NPT 1/4<br>M5 x 0.8 | Rc 1/8 | URJ 1/4 | TSJ 1/4 |
| **Material** | | Case: C3604 + nickel plated, Piping port/pressure sensor: Stainless steel 316L | | | | | | |
| **Sensor cable** | | PSE56□-□: Oil proof heavy-duty vinyl cable with air tube, 3 cores, ø5.1, 3 m, Conductor area: 0.2 mm$^2$, Insulator O.D.: 1.12 mm<br>PSE56□-□-28: Oil proof heavy-duty vinyl cable with air tube, 2 cores, ø5.1, 3 m, Conductor area: 0.2 mm$^2$, Insulator O.D.: 1.12 mm | | | | | | |
| **Mass** | **With sensor cable** | 193 g | 200 g | 194 g | 201 g | 187 g | 203 g | 193 g |
| | **Without sensor cable** | 101 g | 108 g | 102 g | 109 g | 95 g | 111 g | 101 g |

## Internal Circuit

**PSE56□-□**
Voltage output type
1 to 5 V
Output impedance
Approx. 1 kΩ

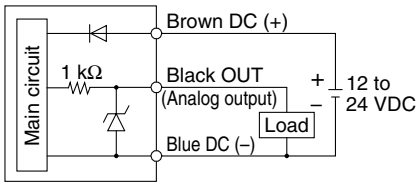


**PSE56□-□-28**
Current output type
4 to 20 mA
Allowable load impedance
500 Ω or less (at 24 VDC)
100 Ω or less (at 12 VDC)

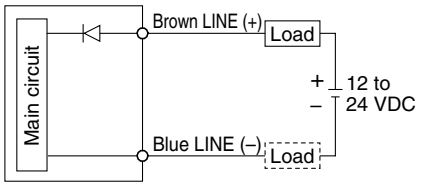


∗ Install the load either on the LINE (+) or LINE (–) side.

**1 to 5 VDC**

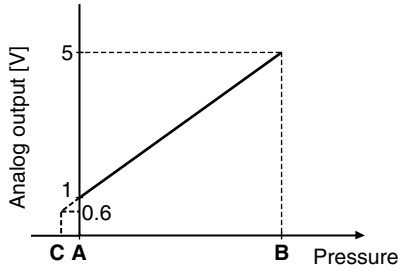


**4 to 20 mADC**

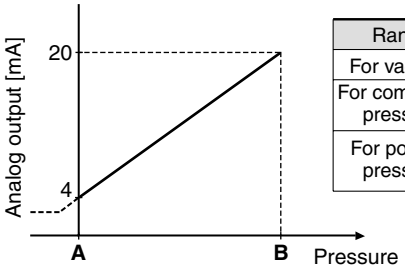


| Range | Rated pressure range | A | B | C |
|---|---|---|---|---|
| For vacuum | 0 to –101 kPa | 0 | –101 kPa | 10.1 kPa |
| For compound pressure | –100 kPa to 100 kPa | –100 kPa | 100 kPa | — |
| For positive pressure | 0 to 1 MPa | 0 | 1 MPa | –0.1 MPa |
| | 0 to 500 kPa | 0 | 500 kPa | –50 kPa |



## Dimensions

**PSE56□-$^{01}_{02}$, PSE56□-$^{N01}_{N02}$**

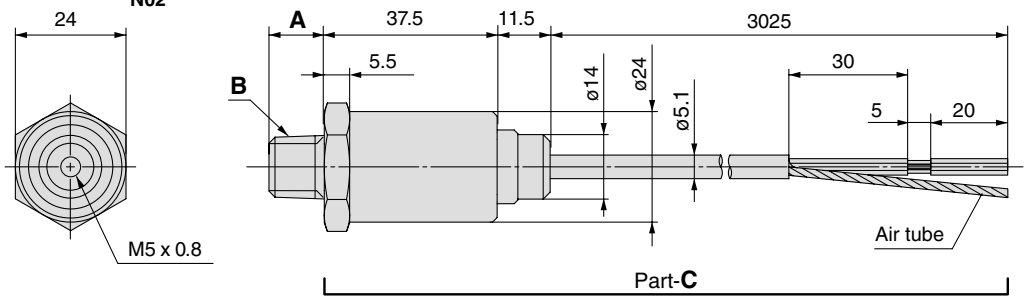


∗ The dimensions of part **C** are common to all PSE56□ models.

**PSE56□-C01**

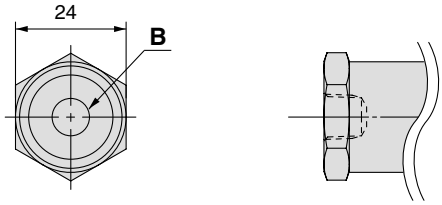


**PSE56□-A2**

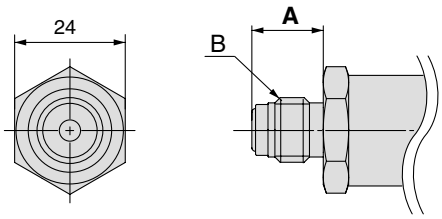


**PSE56□-B2**

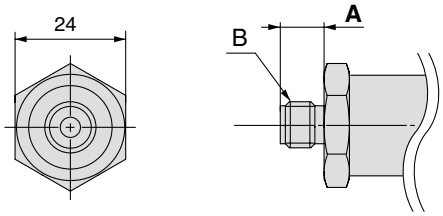


(mm)

| Model | A | B |
|---|---|---|
| **PSE56□-01** | 8.2 | R 1/8 |
| **PSE56□-02** | 12 | R 1/4 |
| **PSE56□-N01** | 9.2 | NPT 1/8 |
| **PSE56□-N02** | 12.2 | NPT 1/4 |
| **PSE56□-C01** | — | Rc 1/8 |
| **PSE56□-A2** | 15.5 | URJ 1/4 |
| **PSE56□-B2** | 9.5 | TSJ 1/4 |

**ZS-31-X□□□**

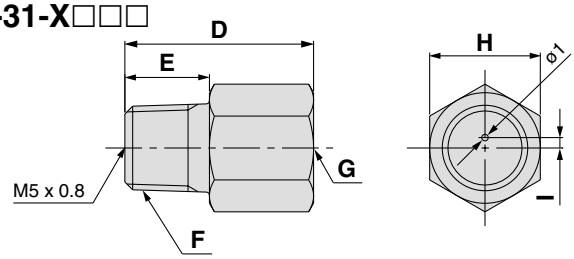


(mm)

| Model | D | E | F | G | H | I |
|---|---|---|---|---|---|---|
| **ZS-31-X188** | 20 | 9 | R 1/8 | Rc 1/8 | 14 | 1.5 |
| **ZS-31-X189** | 20 | 9 | NPT 1/8 | NPT 1/8 | 14 | 1.5 |
| **ZS-31-X175** | 29 | 13 | R 1/4 | Rc 1/4 | 17 | 1.6 |
| **ZS-31-X186** | 29 | 13 | NPT 1/4 | NPT 1/4 | 17 | 1.6 |

# Multi-Channel Digital Pressure Sensor Controller

## Series PSE200

| Applicable sensors | | | | Rated pressure range | Setting/Display resolution |
|---|---|---|---|---|---|
| PSE53□ | PSE54□ | PSE55□ | PSE56□ | –100 kPa 0 100 kPa 1 MPa | |
| **PSE531** | **PSE541** | — | **PSE561** | –101 kPa to 0 | **0.1 kPa** |
| **PSE533** | **PSE543** | — | **PSE563** | –100 kPa to 100 kPa | **0.1 kPa** |
| **PSE530** | **PSE540** | — | **PSE560** | 0 to 1 MPa | **0.001 MPa** |
| **PSE532** | | — | | 0 to 100 kPa | **0.1 kPa** |

### A single controller monitors up to 4 pressure sensors

- Sensor input: 4 inputs
- Switch output: 5 outputs (2 outputs for 1ch, 1 output for 2 to 4ch)

**76% reduction in installation space**

(Compared to the panel mounted ZSE40/ISE40.)

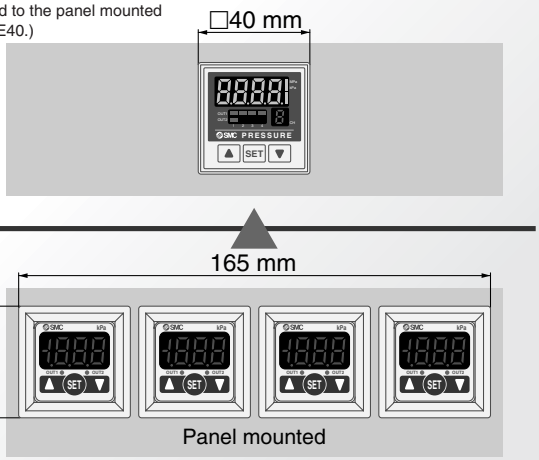


### Functions

- Auto-shift function
- Auto-preset function
- Auto-identification function
- Copy function
- Channel scan function
- Zero-out function
- Key lock function
- Peak/Bottom values display function
- Unit display switching function
- Display calibration function
- Anti-chattering function

**Connection**

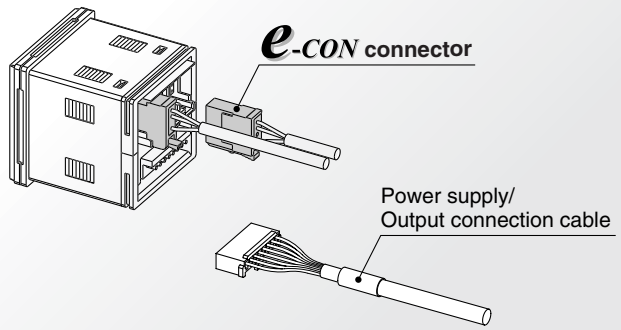


### *A single controller monitors various applications.*

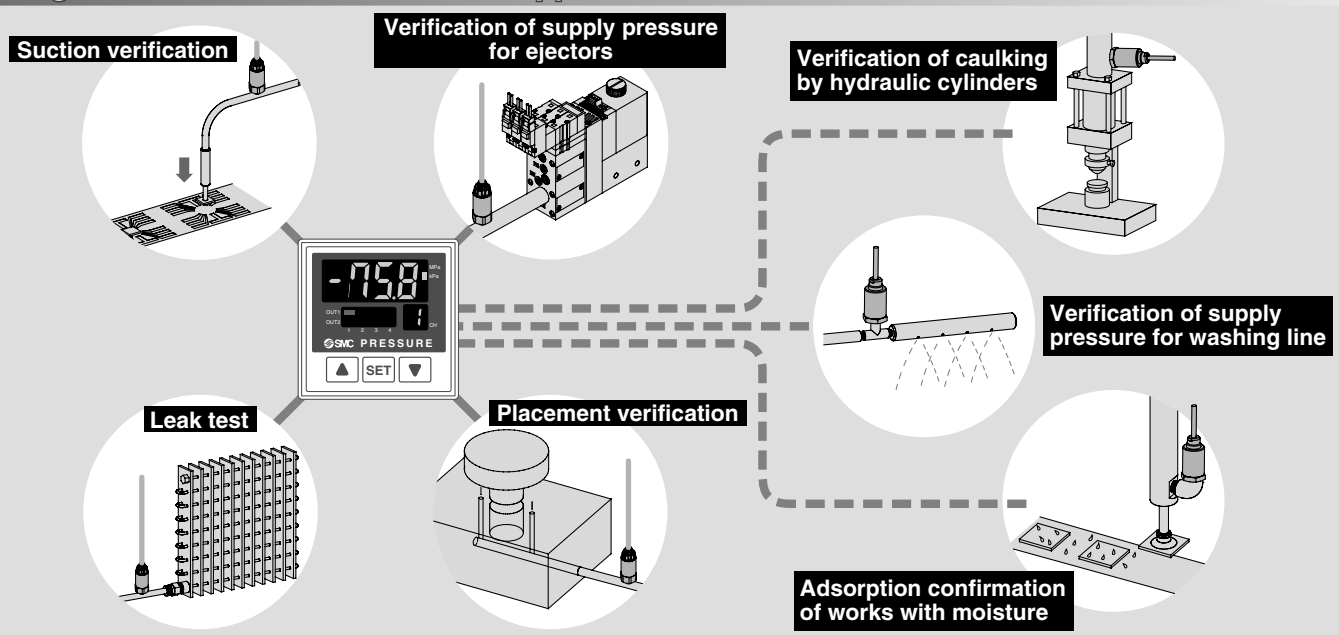




SMC

# Multi-Channel Controller
# Series PSE200




## How to Order

**PSE20 0 – M □ □**

**Input/Output specifications**

| | |
|---|---|
| 0 | NPN 5 outputs + Auto-shift input |
| 1 | PNP 5 outputs + Auto-shift input |

**Unit specifications**

| | |
|---|---|
| Nil | With unit display switching function |
| M | Fixed SI unit Note) |

Note) Fixed unit
For vacuum, low pressure and compound pressure: kPa
For positive pressure: MPa

**Option 2**

| | |
|---|---|
| Nil | None |
| 4C | Sensor connector (4 pcs.) 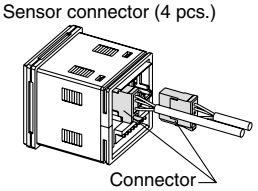 Connector |

**Option 1**

| | |
|---|---|
| Nil | None |
| A | Panel mount adapter 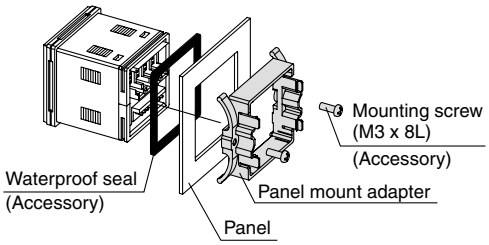 Mounting screw (M3 x 8L) (Accessory) Waterproof seal (Accessory) Panel mount adapter Panel |
| B | Front protective cover + Panel mount adapter 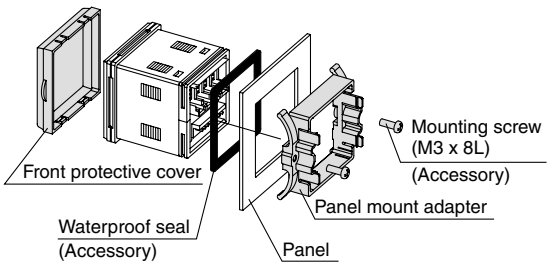 Mounting screw (M3 x 8L) (Accessory) Front protective cover Panel mount adapter Waterproof seal (Accessory) Panel |

**Accessory: Power supply/Output connection cable (2 m)**

Included with the controller.

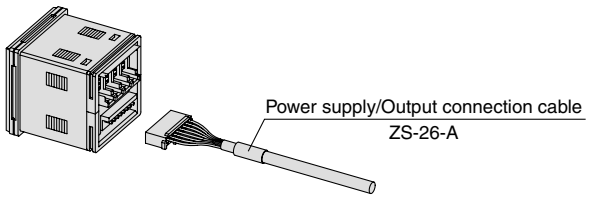


## Option

**When only optional parts are required, order with the part numbers listed below.**

| Description | Part no. | Note |
|---|---|---|
| Panel mount adapter | ZS-26-B | Waterproof seal, screws included |
| Front protective cover + Panel mount adapter | ZS-26-C | Waterproof seal, screws included |
| □48 conversion adapter<br>* This adapter is used to mount the PSE200 series on the panel fitting of the PSE100 series. | ZS-26-D 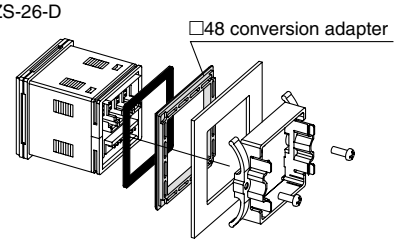 □48 conversion adapter<br>Order panel mount adapter separately. | |
| Front protective cover | ZS-26-01 | |
| Sensor connector | ZS-28-C (1 pc. per set) | |

## Specifications

| Model | | PSE200 | PSE201 |
|---|---|---|---|
| **Power supply voltage** | | 12 to 24 VDC±10%, Ripple (p-p) 10% or less (with power supply polarity protection) | |
| **Current consumption** | | 55 mA or less (Current consumption for sensor is not included.) | |
| **Power supply voltage for sensor** | | [Power supply voltage] –1.5 V | |
| **Power supply current for sensor** Note 1) | | 40 mA maximum (100 mA maximum for the total power supply current when 4 sensors are input.) | |
| **Sensor input** | | 1 to 5 VDC (Input impedance: Approx. 800 kΩ) | |
| | **Number of inputs** | 4 inputs | |
| | **Input protection** | With excess voltage protection (Up to 26.4 V) | |
| **Switch output** | | NPN open collector output: 5 outputs (Sensor input CH1: 2 outputs, CH2 to 4: 1 output) | PNP open collector output: 5 outputs (Sensor input CH1: 2 outputs, CH2 to 4: 1 output) |
| | **Maximum load current** | 80 mA | |
| | **Maximum load voltage** | 30 V | — |
| | **Residual voltage** | 1 V or less (with load current of 80 mA) | |
| | **Response time** | 5 ms or less (Response time selections with anti-chattering function: 20 ms, 160 ms, 640 ms) | |
| | **Short circuit protection** | With short circuit protection function | |
| **Repeatability** | | ±0.1% F.S. ±1 digit or less | |
| **Hysteresis** | **Hysteresis mode** | Adjustable (can be set from 0) | |
| | **Window comparator mode** | Fixed (3 digits) | |
| **Display** | | For measured value display: 4-digit, 7-segment indicator, Display color: Orange (Sampling frequency: 4 times/sec)<br>For channel display: 1-digit, 7-segment indicator, Display color: Red | |
| **Display accuracy (Operating temerature at 25°C)** | | ±0.5% F.S. ±1 digit or less | |
| **Indication light** | | Red (Lights up when output is turned ON.) | |
| **Auto-shift input** | | Non-voltage input (Reed or Solid state), Input 10 ms or more, Independently controllable auto-shift function ON/OFF | |
| **Auto-identification function** | | With auto-identification function Note 2) | |
| **Environmental resistance** | **Enclosure** | Front face: IP65 (when panel-mounted), Others: IP40 | |
| | **Ambient temperature range** | Operating: 0 to 50°C, Stored: –10 to 60°C (No freezing or condensation) | |
| | **Ambient humidity range** | Operating/Stored: 35 to 85% RH (No condensation) | |
| | **Vibration resistance** | 10 to 500 Hz at whichever is smaller of 1.5 mm amplitude or 98 m/s² acceleration, in X, Y, Z directions for 2 hrs. each (De-energized) | |
| | **Impact resistance** | 980 m/s² in X, Y, Z directions, 3 times each (De-energized) | |
| **Temperature characteristics** | | ±0.5% F.S. or less (Based on 25°C) | |
| **Connection** | | Power supply/Output connection: 8P connector, Sensor connection: e-con connector | |
| **Material** | | Housing: PBT; Display: Transparent nylon; Back rubber cover: CR | |
| **Mass** | | Approx. 60 g (Excluding power supply/output cable) | |
| **Power supply/Output connection cable** | | Oil proof heavy-duty vinyl cable, 8 cores, ø4.8, 2 m, Conductor area: 0.15 mm², Insulator O.D.: 0.9 mm | |
| **Standards** | | Compliant with CE marking | |

| Pressure range | For compound pressure | For vacuum | For low pressure | For positive pressure |
|---|---|---|---|---|
| **Applicable pressure sensor** | **PSE533**<br>**PSE543**<br>**PSE563** | **PSE531**<br>**PSE541**<br>**PSE561** | **PSE532** | **PSE530**<br>**PSE560** |
| **Set pressure range** | –101 to 101 kPa | 10 to –101 kPa | –10 to 101 kPa | –0.1 to 1 MPa |
| **Setting/Display resolution** | 0.1 kPa | 0.1 kPa | 0.1 kPa | 0.001 MPa |

Note 1) If the Vcc and 0 V side of the sensor input connector are short circuited, the inside of the controller will be damaged.
Note 2) Auto-identification function comes with "the PSE53□ series" pressure sensor only. Other SMC series (PSE540 and 560) are not equipped with this function.

## Dimensions

### PSE200/201

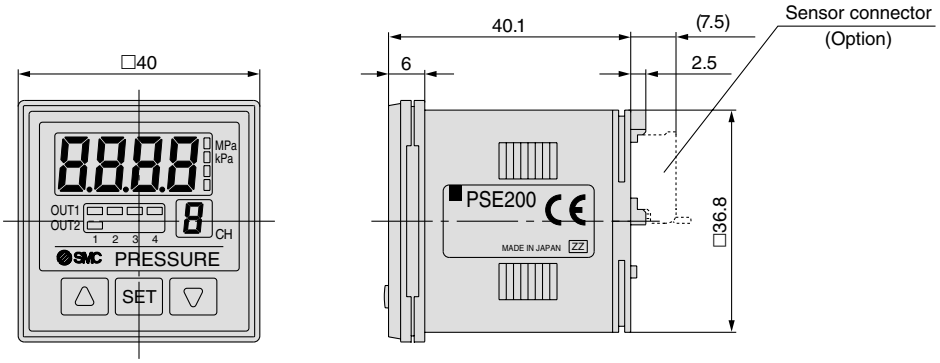


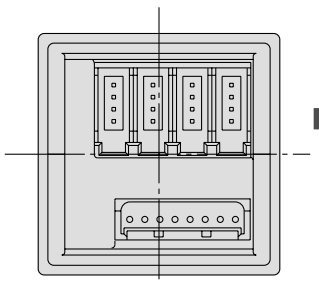

**Sensor connector (4P x 4)**

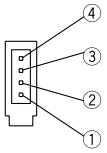


| PIN no. | Terminal |
|---|---|
| ① | DC (+) |
| ② | N.C. |
| ③ | DC (–) |
| ④ | IN (1 to 5 V) |

**Connector (Option)**

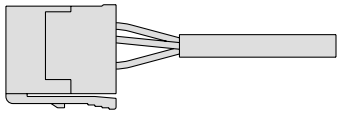

**Power supply/Output connector (8P)**

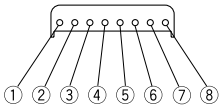


| PIN no. | Terminal |
|---|---|
| ① | DC (+) |
| ② | DC (–) |
| ③ | CH1_OUT1 |
| ④ | CH1_OUT2 |
| ⑤ | CH2_OUT1 |
| ⑥ | CH3_OUT1 |
| ⑦ | CH4_OUT1 |
| ⑧ | Auto-shift input |

**Power supply/Output connection cable (Accessory)**

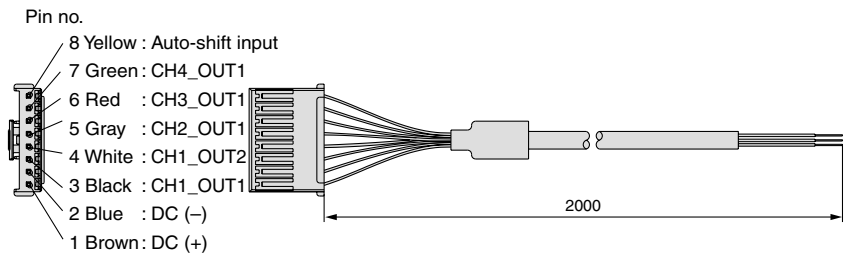

## Dimensions

**Front protective cover + Panel mount**

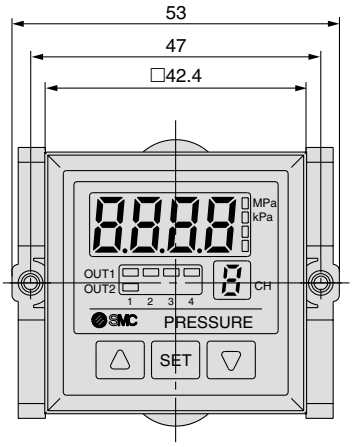


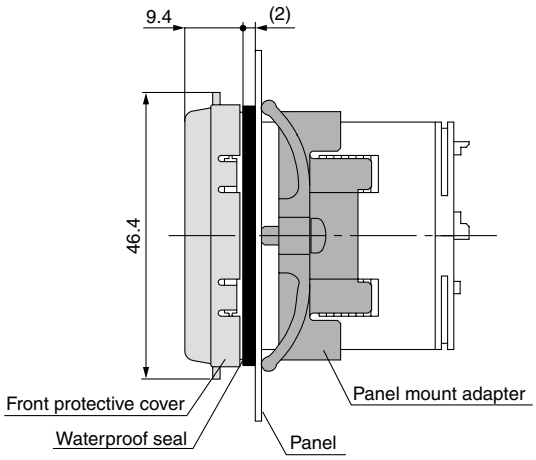


**□48 conversion adapter + Panel mount**

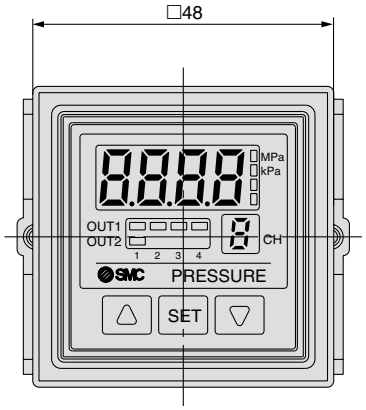


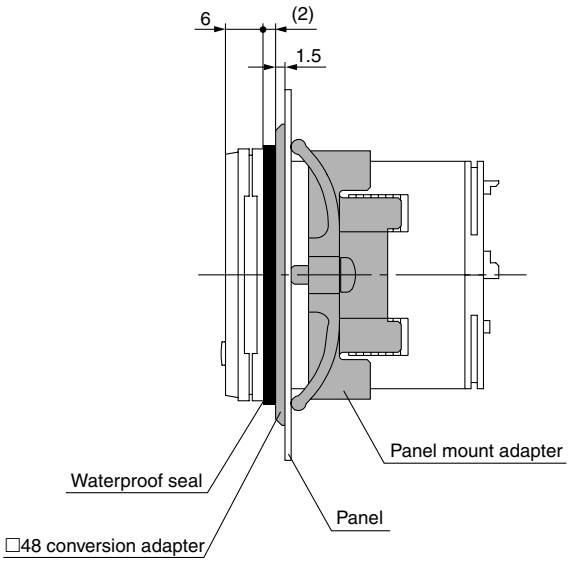


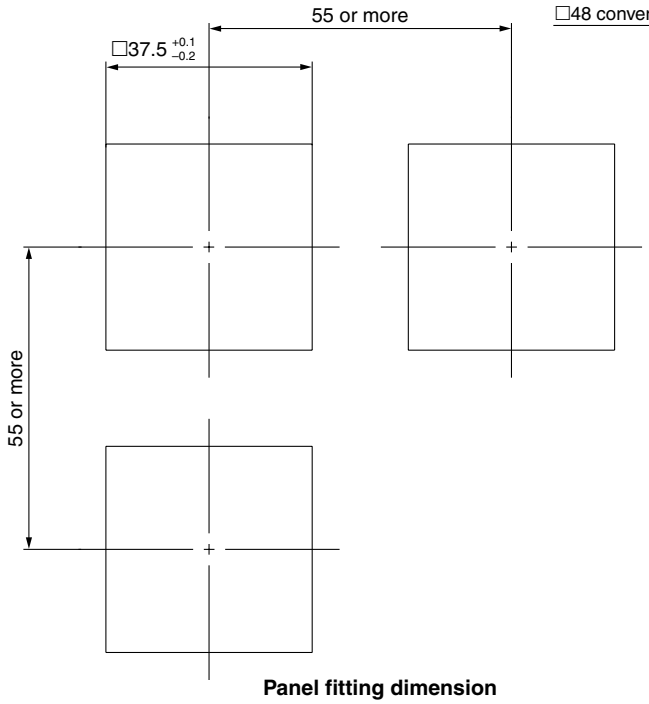


**Panel fitting dimension**
**Applicable panel thickness: 0.5 to 8 mm**

## Descriptions

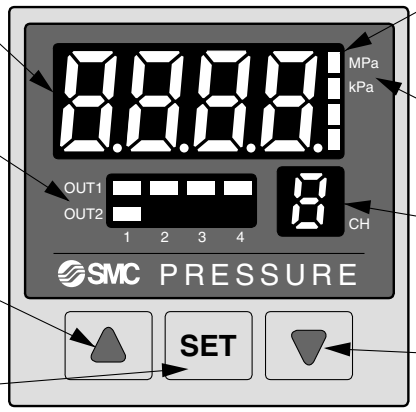


**4-digit display**

Displays the measured pressure value, content for each setting, and error code.

**Switch output display**

Displays the output status of OUT1 (CH1 to CH4), OUT2 (CH1 only).
Lights up when it is turned ON.

**UP button**

Use this button to change the mode or set value.

**SET button**

Use this button to set the mode or set value.

**Unit display**

The selected unit lights up. Use unit labels for units other than MPa and kPa.

**Unit labels**

kgf/cm² | bar | PSI | inHg | mmHg

**Channel display**

Displays the selected channel.

**DOWN button**

Use this button to change the mode or set value.



## Error Code & Solution

| Error name | LED display | Contents | Solution |
|---|---|---|---|
| Overcurrent error | Er 1 | Excess current is flowing into the switch output of OUT1. | Shut off the power supply. After eliminating the output factor that caused the excess current, turn the power supply back on. |
| | Er 2 | Excess current is flowing into the switch output of OUT2. | |
| Residual pressure error | Er 3 | Pressure is applied to a pressure sensor during the reset operation (a zero point adjustment) as follows:<br>When compound pressure is used: ± 2.5% F.S. or more.<br>When pressure other than compound pressure is used: ±5% F.S. or more.<br>∗ After displaying for 2 seconds, it will return to the measuring mode. | Bring the pressure back to atmospheric pressure and use the reset function (zero point adjustment) again. |
| Applied pressure error | - - - | The DC (–) wire of the sensor may be disconnected, or pressure exceeding the upper limit of the setting pressure range may be applied. | Confirm the connection and wiring of the sensor and get the applied pressure back to within the setting pressure range. |
| | - - - - | The sensor may be disconnected or mis-wired, or pressure exceeding the lower limit of the setting pressure range may be applied. | |
| System error | Er 5 | Internal data error. | Shut off the power supply and turn it back on. |
| | Er 6 | Internal data error. | |
| | Er 7 | Internal data error. | |
| | Er 8 | Internal data error. | |

∗ In the case where the product cannot be returned to the normal state, even though the described measures were taken, please contact us for investigation.

## Internal Circuit and Connection

**PSE200-(M)□**

**• NPN open collector 5 outputs + Auto-shift 1 input specification**

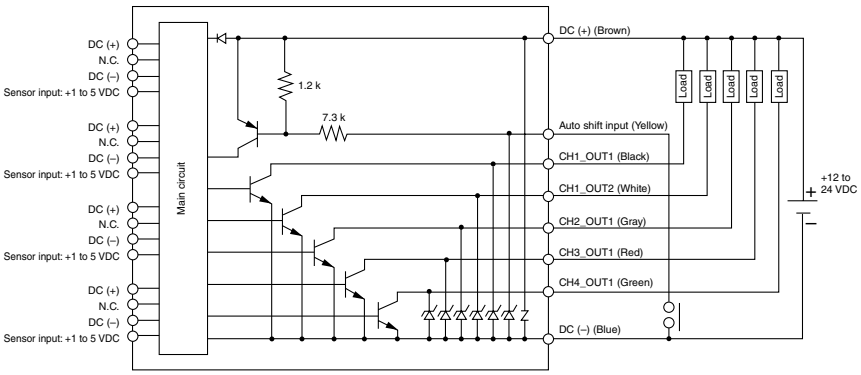


**PSE201-(M)□**

**• PNP open collector 5 outputs + Auto-shift 1 input specification**

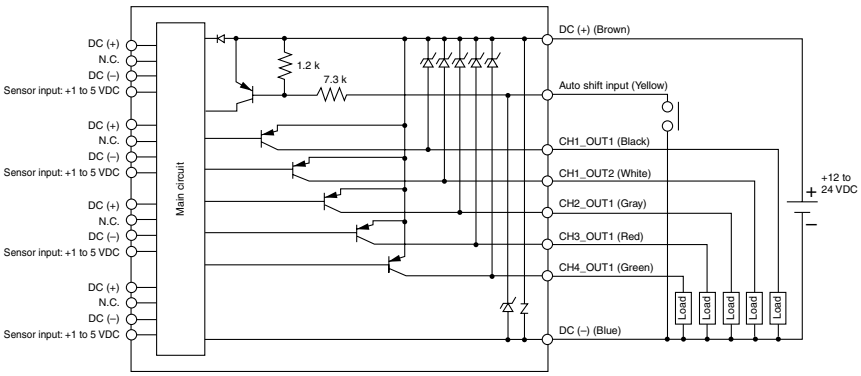

# 2-Color Display Digital Pressure Sensor Controller

## Series PSE300

| Applicable sensors | | | | Rated pressure range | Setting/Display resolution |
|---|---|---|---|---|---|
| PSE53□ | PSE54□ | PSE55□ | PSE56□ | –100 kPa 0 100 kPa 500 kPa 1 MPa | |
| PSE531 | PSE541 | — | PSE561 | –101 kPa 0 | 0.1 kPa |
| PSE533 | PSE543 | — | PSE563 | –100 kPa 100 kPa | 0.2 kPa |
| PSE530 | PSE540 | — | PSE560 | 0 1 MPa | 0.001 MPa |
| PSE532 | — | — | — | 0 100 kPa | 0.1 kPa |
| — | — | — | PSE564 | 0 500 kPa | 1 kPa |
| — | — | PSE550 | — | 0 2 kPa | 0.01 kPa |

### 2-color display (Red/Green)

Able to set the 4 patterns of the display color.

| Pattern | ON | OFF |
|---|---|---|
| ① | Red | Green |
| ② | Green | Red |
| ③ | Red | Red |
| ④ | Green | Green |

### Can be mounted in close proximity with each other either horizontally or vertically.

Reduced panel fitting labor

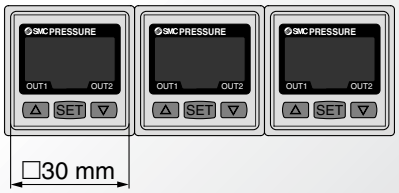


**Response time**
**1 ms**

### Connection

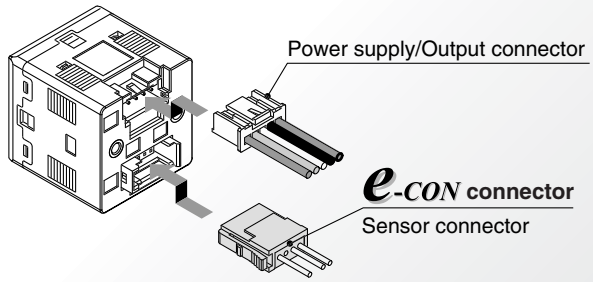


## Functions

- Auto-shift function
- Auto-preset function
- Display calibration function
- Peak/Bottom values display function
- Key lock function
- Zero-out function
- Error indication function
- Unit display switching function
- Anti-chattering function

### DIN rail/Terminal block type

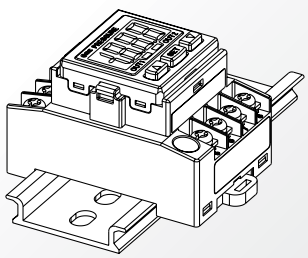

### Current input

Electrical current input (4 to 20 mADC) is added to the sensor input.

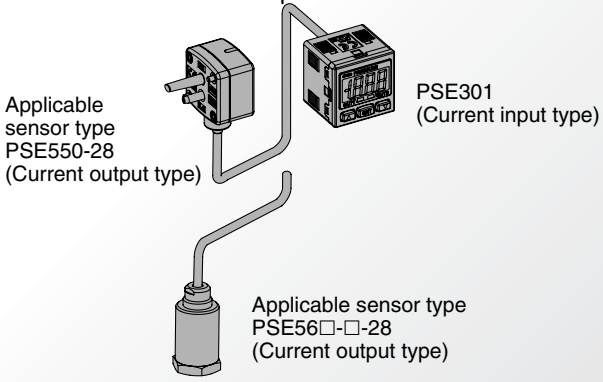

# Pressure Sensor Controller
# Series PSE300

## How to Order



**DIN rail/Terminal block type** **PSE3 0 0 T – M**

**Connector type** **PSE3 0 0 – M**



**Input specifications**

| | |
|---|---|
| 0 | Voltage input |
| 1 | Current input |

**Input/Output specifications**

| | |
|---|---|
| 0 | NPN 2 outputs + 1-5 V output |
| 1 | NPN 2 outputs + 4-20 mA output |
| 2 | NPN 2 outputs + Auto-shift input |
| 3 | PNP 2 outputs + 1-5 V output |
| 4 | PNP 2 outputs + 4-20 mA output |
| 5 | PNP 2 outputs + Auto-shift input |

**Unit specifications**

| | |
|---|---|
| Nil | With unit display switching function |
| M | Fixed SI unit Note) |

Note) Fixed unit
For vacuum, low pressure, low differential pressure and compound pressure: kPa
For positive pressure: MPa (For 1 MPa)
kPa (For 500 kPa)

**Option 1**

| | |
|---|---|
| Nil | None |
| L | Power supply/Output connection cable |

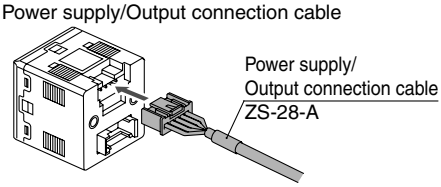


Note) The cable is unassembled in the factory, but is included with the shipment.

Order DIN rail separately. Refer to page 852.

**Option**

| | |
|---|---|
| Nil | None |
| E | Front protective cover |

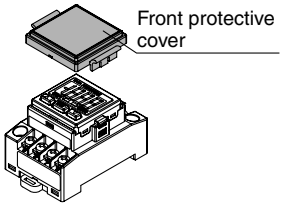


**Option 3**

| | |
|---|---|
| Nil | None |
| C | Sensor connector |

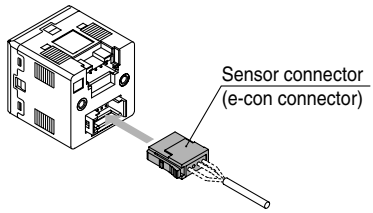


Note) At the factory, the connector is not attached to the cable, but packed together with it for shipment.

**Option 2**

| | |
|---|---|
| Nil | None |
| A | Bracket |

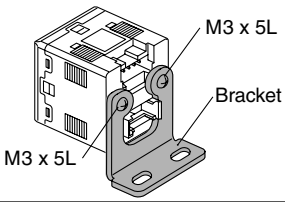


| | |
|---|---|
| B | Panel mount adapter |

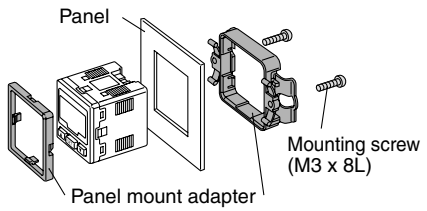


| | |
|---|---|
| D | Panel mount adapter + Front protective cover |

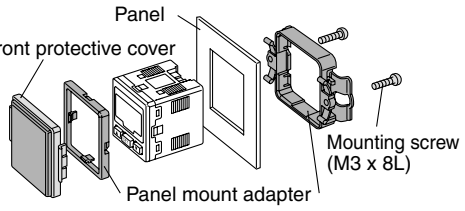


Note) These options are not attached in the factory, but packed together with it for shipment.

## Option

| Description | Part no. | Note |
|---|---|---|
| Power supply/Output connection cable (2 m) | ZS-28-A | |
| Bracket | ZS-28-B | With M3 x 5L (2 pcs.) |
| Sensor connector | ZS-28-C | 1 pc. |
| Panel mount adapter | ZS-27-C | With M3 x 8L (2 pcs.) |
| Panel mount adapter + Front protective cover | ZS-27-D | With M3 x 8L (2 pcs.) |
| Front protective cover | ZS-27-01 | 1 pc. |

## Specifications

| Model | | | PSE3□□ | | | | |
|---|---|---|---|---|---|---|---|
| **Applicable pressure sensor** | | PSE533<br>PSE543<br>PSE563 | PSE531<br>PSE541<br>PSE561 | PSE532 | PSE530<br>PSE560 | PSE564 | PSE550 |
| **Set (differential) pressure range** | | –101 to 101 kPa | 10 to –101 kPa | –10 to 100 kPa | –0.1 to 1 MPa | –50 to 500 kPa | –0.2 to 2 kPa |
| **Setting/Display resolution** | | 0.2 kPa | 0.1 kPa | 0.1 kPa | 0.001 MPa | 1 kPa | 0.01 kPa |
| **Pressure range** Note 1) | | For compound pressure | For vacuum | For low pressure | For positive pressure | | For low differential pressure |
| **Rated (differential) pressure range** | | –100 to 100 kPa | 0 to –101 kPa | 0 to 100 kPa | 0 to 1 MPa | 0 to 500 kPa | 0 to 2 kPa |
| **Extension analog output range** | | — | 10.1 to 0 kPa | –10 to 0 kPa | –0.1 to 0 MPa | –50 to 0 kPa | –0.2 to 0 kPa |
| **Power supply voltage** | | 12 to 24 VDC ±10%, Ripple (p-p) 10% or less (with power supply polarity protection) | | | | | |
| **Current consumption** | | 50 mA or less (Current consumption for sensor is not included.) | | | | | |
| **Sensor input** | | PSE30□: Voltage input 1 to 5 VDC (Input impedance: 1 MΩ)<br>PSE31□: Current input 4 to 20 mADC (Input impedance: 100 Ω) | | | | | |
| | **Number of inputs** | 1 input | | | | | |
| | **Input protection** | With excess voltage protection (Up to 26.4 V) | | | | | |
| **Hysteresis** | | Hysterisis mode: Variable, Window comparator mode: Variable | | | | | |
| **Switch output** | | NPN or PNP open collector output: 2 outputs | | | | | |
| | **Maximum load current** | 80 mA | | | | | |
| | **Maximum load voltage** | 30 VDC (at NPN output) | | | | | |
| | **Residual voltage** | 1 V or less (with load current of 80 mA) | | | | | |
| | **Output protection** | With short circuit protection | | | | | |
| **Response time** | | 1 ms or less | | | | | |
| | **Anti-chattering function** | Response time settings for anti-chattering function: 20 ms, 160 ms, 640 ms, 1280 ms | | | | | |
| **Repeatability** | | ±0.1% F.S. or less | | | | | |
| **Analog output** | **Voltage output** Note 2) | Output voltage: 1 to 5 V (within rated pressure range (Differential pressure)), 0.6 to 1 V (within extension analog output range)<br>Output impedance: Approx. 1 kΩ, Linearity: ±0.2% F.S. (Not including sensor accuracy), Response speed: 150 ms or less | | | | | |
| | Accuracy (To display value) (25°C) | ±0.6% F.S. or less | | | | ±1.0% F.S. or less | ±1.5% F.S. or less |
| | **Current output** Note 2) | Output current: 4 to 20 mA (within rated pressure range (Differential pressure)), 2.4 to 4 mA (within extension analog output range)<br>Maximum load impedance: 300 Ω (at 12 VDC), 600 Ω (at 24 VDC), Minimum load impedance: 50 Ω<br>Linearity: ±0.2% F.S. (Not including sensor accuracy), Response time: 150 ms or less | | | | | |
| | Accuracy (To display value) (25°C) | ±1.0% F.S. or less | | | | ±1.5% F.S. or less | ±2.0% F.S. or less |
| **Display accuracy (Ambient temperature at 25°C)** | | ±0.5% F.S.<br>±2 digits or less | ±0.5% F.S. ±1 digit or less | | | | |
| **Display** | | 3 + 1/2 digit, 7 segment indicator, 2-color display (Red/Green), Sampling frequency: 5 times/sec | | | | | |
| **Indicator light** | | OUT1: Lights up when turned ON (Green), OUT2: Lights up when turned ON (Red) | | | | | |
| **Auto-shift input** Note 2) | | Non-voltage input (Reed or Solid state), Low level input: 5 ms or more, Low level: 0.4 V or less | | | | | |
| **Environmental resistance** | **Enclosure** | IP40 | | | | | |
| | **Operating temperature range** | Operating: 0 to 50°C, Stored: –10 to 60°C (No freezing or condensation) | | | | | |
| | **Operating humidity range** | Operating/Stored: 35 to 85% RH (No condensation) | | | | | |
| | **Withstand voltage** | 1000 VAC for 1 minute between live parts and case | | | | | |
| | **Insulation resistance** | 50 MΩ or more between live parts and case (at 500 VDC Mega) | | | | | |
| | **Vibration resistance** | 10 to 150 Hz at whichever is smaller of 1.5 mm amplitude or 98 m/s$^2$ acceleration, in X, Y, Z directions, for 2 hours each (De-energized) | | | | | |
| | **Impact resistance** | 100 m/s$^2$ in X, Y, Z directions, 3 times each (De-energized) | | | | | |
| **Temperature characteristics** | | ±0.5% F.S. or less (Based on 25°C) | | | | | |
| **Connection** | | PSE3□□: Power supply/Output connection: 5P connector, Sensor connection: 4P connector<br>PSE3□□T: Terminal block | | | | | |
| **Material** | | Front case: PBT, Rear case: PBT (PSE3□□), Denaturated PPE (PSE3□□T) | | | | | |
| **Mass** | With power supply/Output connection cable | PSE3□□: 85 g | | | | | |
| | Without power supply/Output connection cable | PSE3□□: 30 g, PSE3□□T: 50 g | | | | | |
| **Power supply/Output connection cable** | | Oil proof heavy-duty vinyl cable, 5 cores, ø4.1, 2 m, Conductor area: 0.2 mm$^2$ Insulator O.D.: 1.12 mm | | | | | |
| **Standards** | | Compliant with CE marking, UL (CSA) | | | | | |

Note 1) Pressure range can be selected during initial setting.
Note 2) Auto-shift function is not available when analog output option is selected.
Also, analog output option is not available when auto-shift function is selected.

Note 3) The following units can be selected with unit conversion function:
For vacuum & compound pressure: kPa·kgf/cm$^2$·bar·psi·mmHg·inHg
For positive pressure & low pressure: MPa·kPa·kgf/cm$^2$·bar·psi
For low differential pressure: kPa·mmH$_2$O

## Analog Output

**1 to 5VDC**

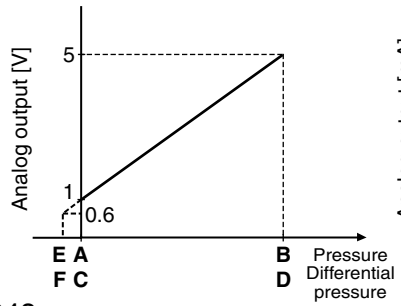


**4 to 20 mADC**

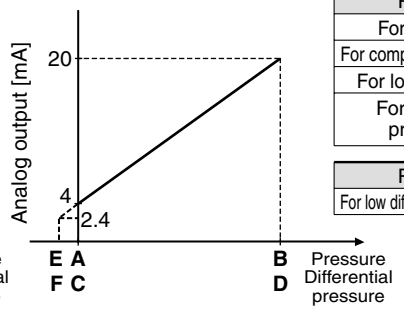


| Range | Rated pressure range | A | B | E |
|---|---|---|---|---|
| For vacuum | 0 to –101 kPa | 0 | –101 kPa | 10.1 kPa |
| For compound pressure | –100 kPa to 100 kPa | –100 kPa | 100 kPa | — |
| For low pressure | 0 to 100 kPa | 0 | 100 kPa | –10 kPa |
| For positive pressure | 0 to 1 MPa | 0 | 1 MPa | –0.1 MPa |
| | 0 to 500 kPa | 0 | 500 kPa | –50 kPa |

| Range | Rated pressure range | C | D | F |
|---|---|---|---|---|
| For low differential pressure | 0 to 2 kPa | 0 | 2 kPa | –0.2 kPa |

## Internal Circuit

### PSE3□0

NPN open collector output (2 outputs), Max. 30 V or 80 mA, residual voltage 1 V or less
Analog output: 1 to 5 V
Output impedance: Approx. 1 kΩ

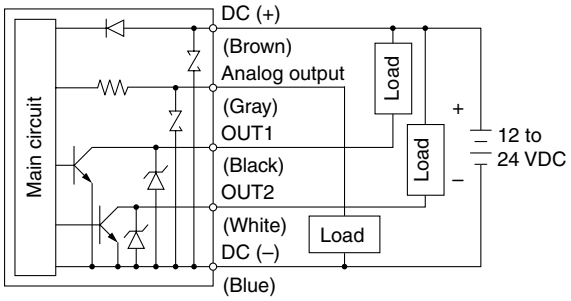


### PSE3□3

PNP open collector output (2 outputs), Max. 80 mA, residual voltage 1 V or less
Analog output: 1 to 5 V
Output impedance: Approx. 1 kΩ

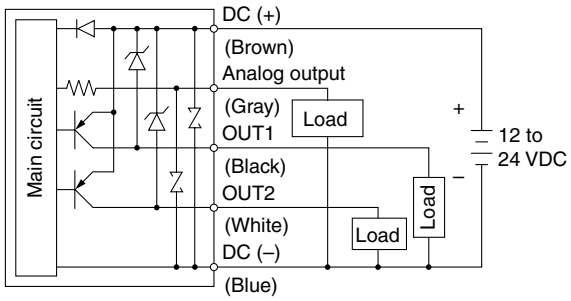


### PSE3□1

NPN open collector output (2 outputs), Max. 30 V or 80 mA, residual voltage 1 V or less
Analog output: 4 to 20 mA
Maximum load impedance: 300 Ω (12 VDC), 600 Ω (24 VDC)
Minimum load impedance: 50 Ω

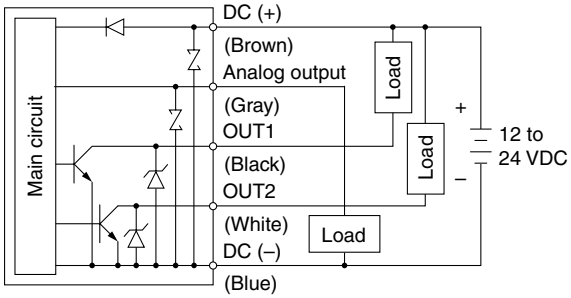


### PSE3□4

PNP open collector output (2 outputs), Max. 80 mA, residual voltage 1 V or less
Analog output: 4 to 20 mA
Maximum load impedance: 300 Ω (12 VDC), 600 Ω (24 VDC)
Minimum load impedance: 50 Ω

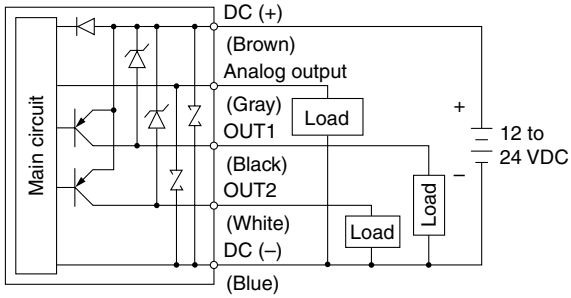


### PSE3□2

NPN open collector output with auto-shift input (2 outputs),
Max. 30 V, 80 mA, residual voltage 1 V or less

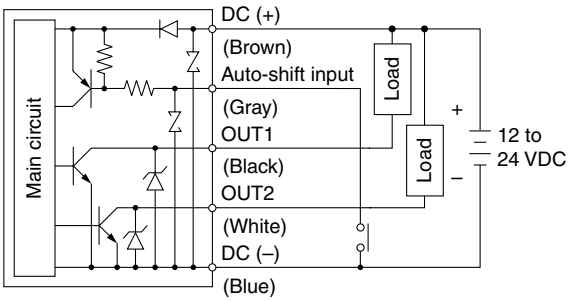


### PSE3□5

PNP open collector output with auto-shift input (2 outputs),
Max. 80 mA, residual voltage 1 V or less

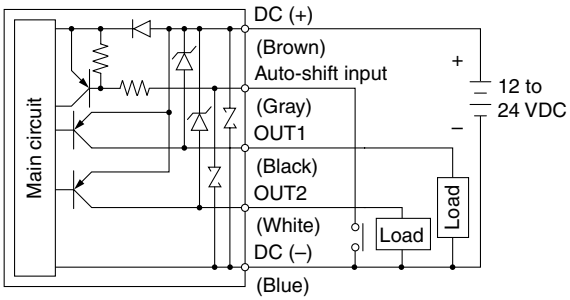


Note: The colors in parentheses indicate the color of the lead wire when it is connected to the power supply / output connection cable (ZS-28-A).

## Descriptions

**LCD**

Displays the current pressure, set mode, selected display unit, and error code. Four different display settings are available. Always use red or green display; or switch between green and red according to the output.

**Output (OUT1) display (Green)**

Lights up when OUT1 is turned ON.

**Up button**

Use this button to select the mode or increase the ON/OFF set value.
It is also used for switching to the peak display mode.




**Output (OUT2) display (Red)**

Lights up when OUT2 is turned ON.

**SET button**

Use this button to change the mode or confirm the set value.

**Down button**

Use this button to select the mode or decrease the ON/OFF set value.
It is also used for switching to the bottom display mode.

## Dimensions

### PSE3□□

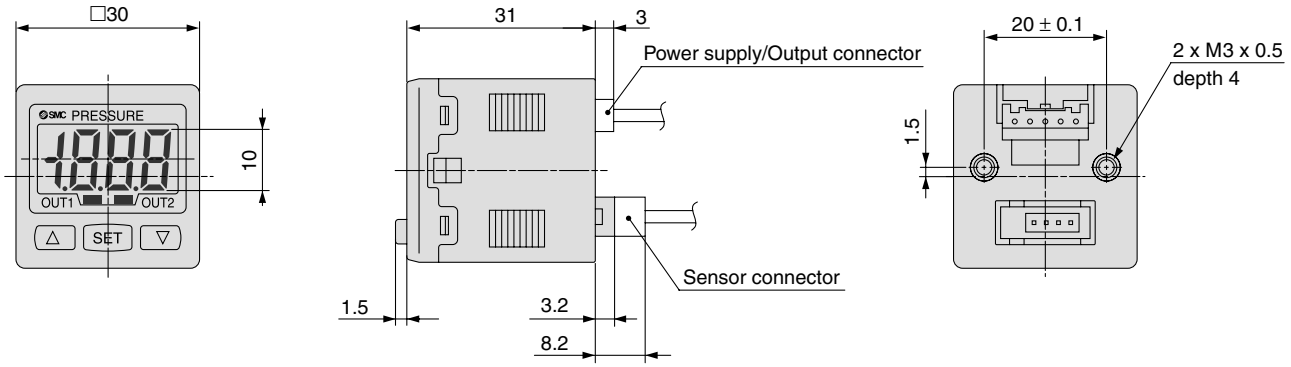


### Power supply/Output connection cable (ZS-28-A)

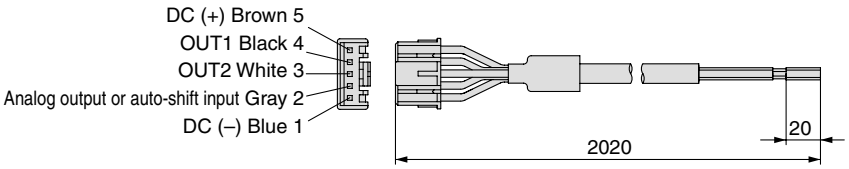


### Sensor connector

| PIN no. | Terminal |
|---|---|
| 1 | DC (+) |
| 2 | N.C. |
| 3 | DC (–) |
| 4 | IN (1 to 5 V) |

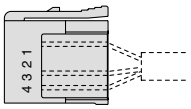


### With bracket

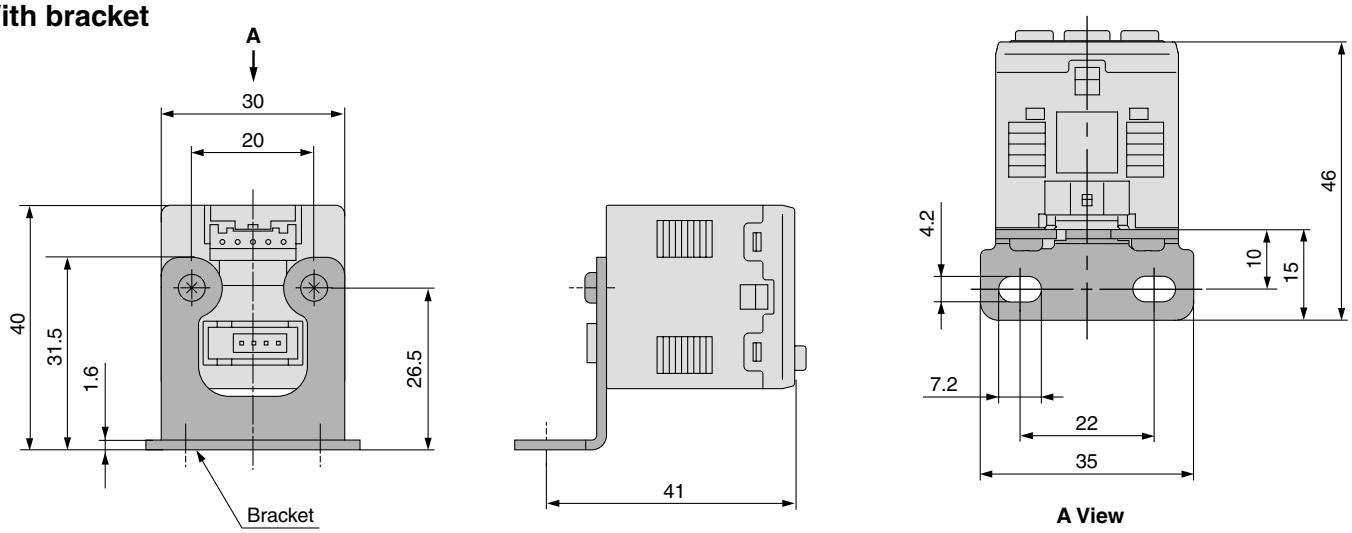


### With panel mount adapter

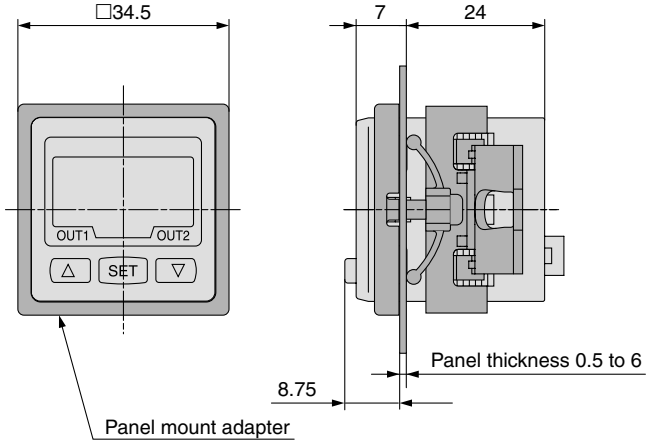


### With panel mount adapter + Front protective cover

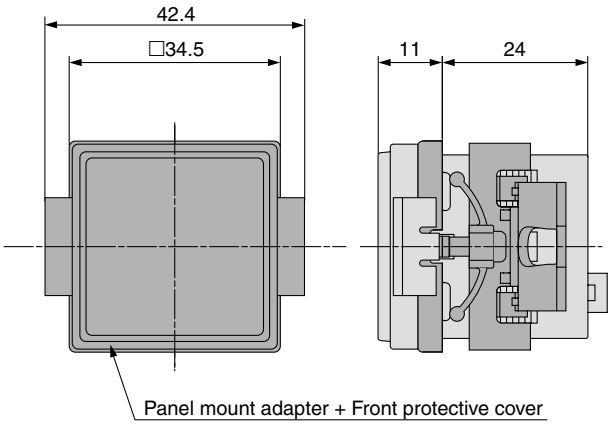

## Dimensions

### Panel fitting dimensions

**Mount of single unit**

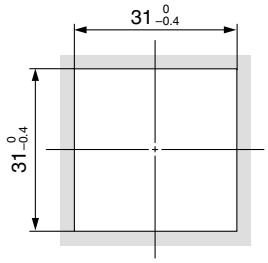


**Horizontal stacking mount of multiple units (n pcs.)**

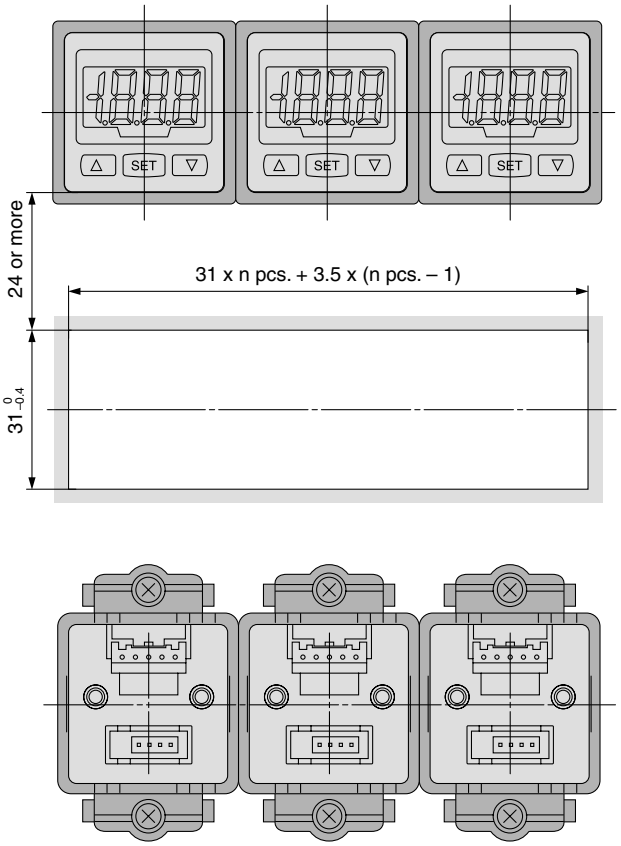


**Vertical stacking mount of multiple units (n pcs.)**

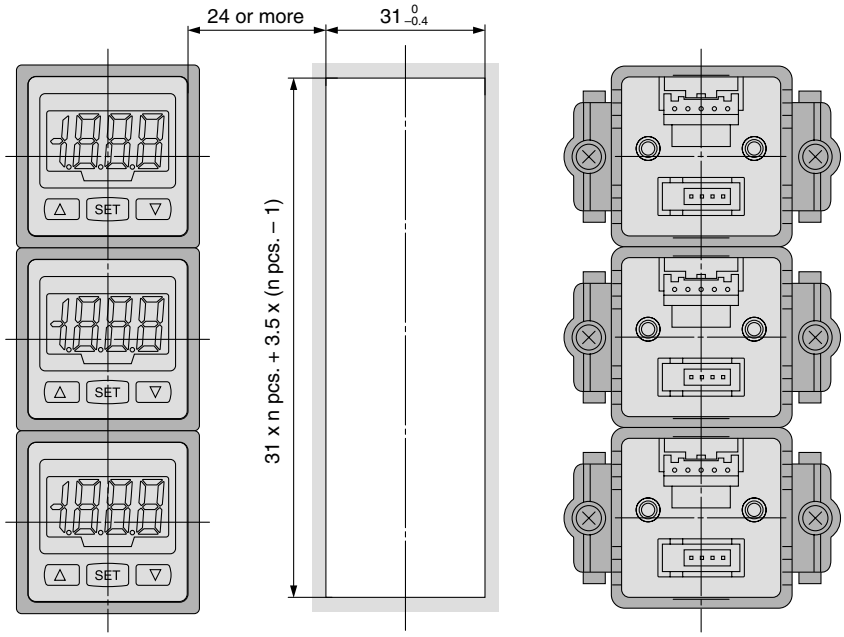

## Dimensions

### PSE3□□T

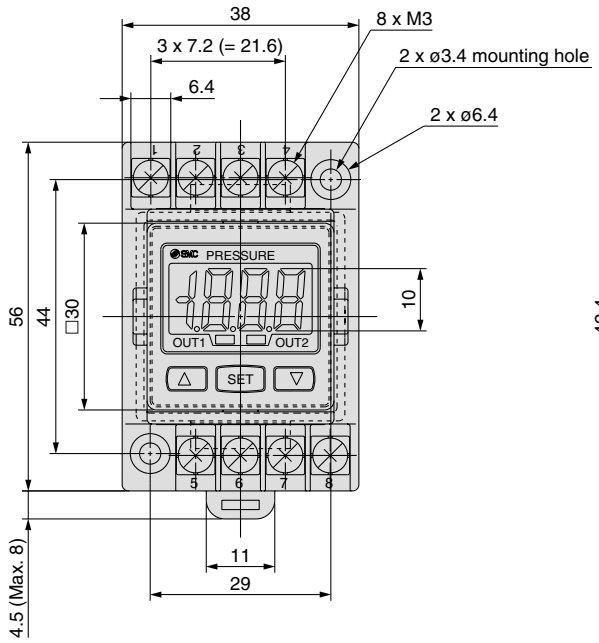


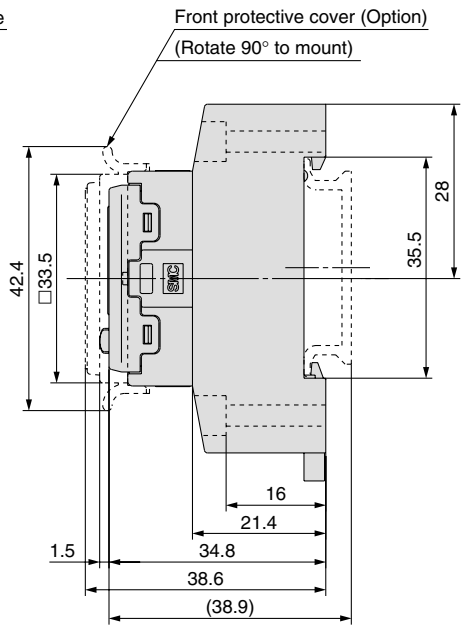


## Connections

### PSE30□T (Pressure input type)

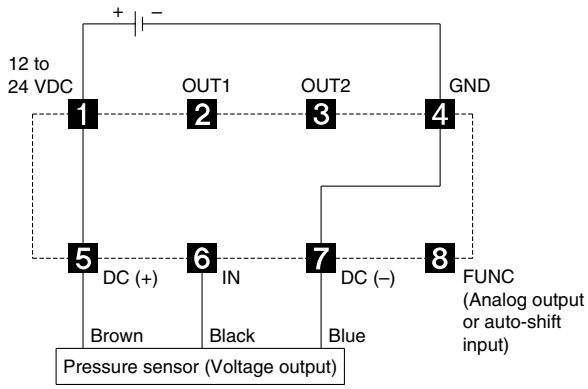


### PSE31□T (Current input type)

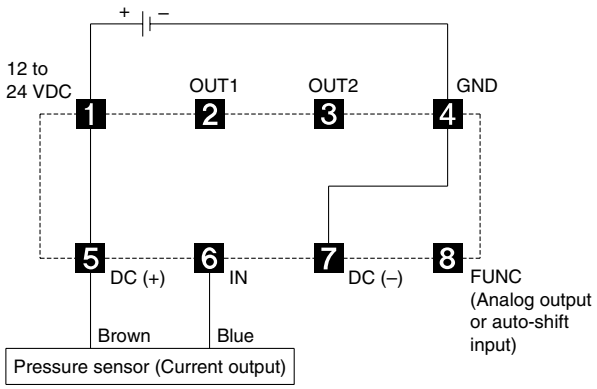


## DIN Rail

### ISA-5-□

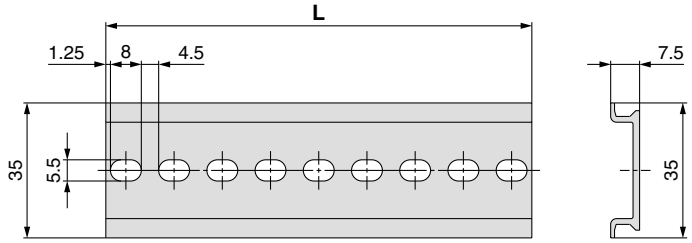


| Part no. | L |
|---|---|
| **ISA-5-1** | 73.0 |
| **ISA-5-2** | 135.5 |
| **ISA-5-3** | 173.0 |
| **ISA-5-4** | 210.5 |
| **ISA-5-5** | 248.0 |
| **ISA-5-6** | 285.5 |
| **ISA-5-7** | 323.0 |

## Function Details

### A Auto-shift function

When there are large fluctuations in the supply pressure, the switch may fail to operate correctly. The auto-shift function compensates such supply pressure fluctuations. It measures the (differential) pressure at the time of auto-shift signal input and uses it as the reference (differential) pressure to correct the set value on the switch.

**Set value correction by auto-shift function**

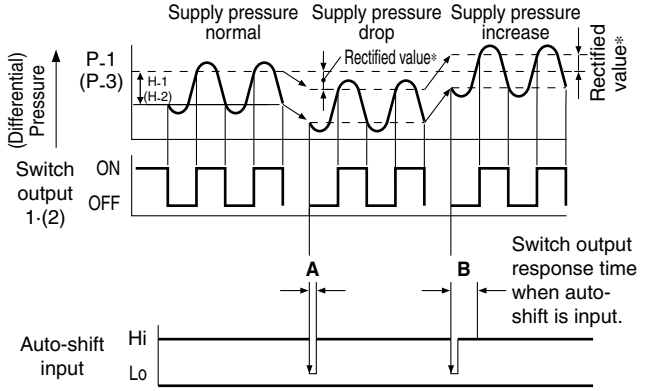


| | A Auto-shift input time | B Switch output response time at time of auto-shift input |
|---|---|---|
| **PSE200** | 10 ms or more | 15 ms or less |
| **PSE300** | 5 ms or more | 10 ms or less |

∗ **Rectified value**
When the auto-shift is selected, "ooo" will be displayed for approximately 1 second, and the pressure value at that point will be saved as a rectified value "C_5" (for CH1 of PSE200 and PSE300) or "C_3" (for CH2 to 4 for PSE200). Based on the saved rectified values (Note), the set value "P_1" to "P_4" (for PSE200) or "P_1", "H_1", "P_3", "H_2" (for PSE300) will likewise be rectified.

Note) When an output is reversed, "n_1" to "n_4" (for PSE200) or "n_1", "H_1", "n_3", "H_2" (for PSE300) will be rectified.

**Possible Set Range for Auto-Shift Input**

| PSE200 | Regulating pressure (Differential pressure) range | Possible set range |
|---|---|---|
| Compound pressure | –101.0 to 101.0 kPa | –101.0 to 101.0 kPa |
| Vacuum | 10.0 to –101.0 kPa | 101.0 to –101.0 kPa |
| Low pressure | –10.0 to 101.0 kPa | –100.0 to 101.0 kPa |
| Positive pressure | –0.1 to 1.000 MPa | –1.000 to 1.000 MPa |
| | — | — |
| Low differential pressure | — | — |

| PSE300 | Regulating pressure (Differential pressure) range | Possible set range |
|---|---|---|
| Compound pressure | –101.0 to 101.0 kPa | –101.0 to 101.0 kPa |
| Vacuum | 10.0 to –101.0 kPa | 101.0 to –101.0 kPa |
| Low pressure | –10 to 100.0 kPa | –100.0 to 100.0 kPa |
| Positive pressure | –0.1 to 1.000 MPa | –1.000 to 1.000 MPa |
| | –50 to 500 kPa | –500 to 500 kPa |
| Low differential pressure | –0.2 to 2.00 kPa | –2.00 to 2.00 kPa |

**Auto-shift zero (Series PSE300 only)**
The basic function of auto-shift zero is the same as the function for auto-shift. Also it corrects values on the display, based on a pressure value of 0, when the auto-shift is selected.

### B Auto-preset function

Auto-preset function, when selected in the initial setting, calculates and stores the set value from the measured (differential) pressure. The optimum set value is determined automatically by repeating vacuum and break with the target workpiece several times.

**Adsorption Verification**

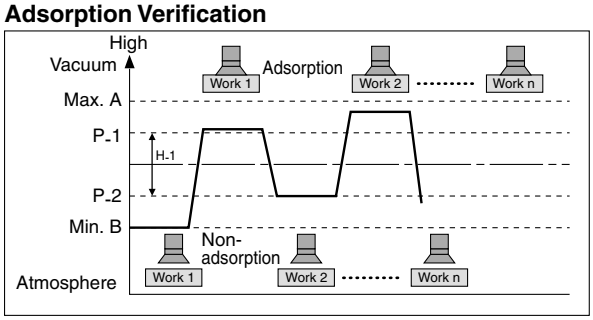


**Formula for Obtaining the Set Value**

| | P_1 or P_3 | P_2(H_1) or P_4(H_2) |
|---|---|---|
| **PSE200** | P_1(P_3)=A-(A-B)/4 | P_2(P_4)=B+(A-B)/4 |
| **PSE300** | | H_1(H_2)=(A-B)/2 |

### C Precision indicator setting

This function eliminates slight differences in the output values and allows uniformity in the numbers displayed. Displayed values of the pressure sensors can be adjusted to within ±5%.

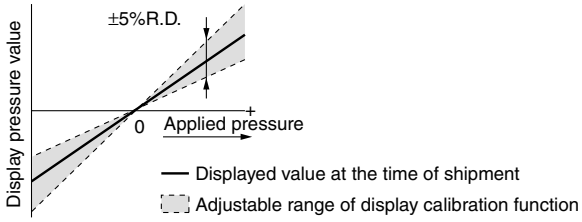


Note) When the precision indicator setting function is used, the set (differential) pressure value may change ±1 digit.

### D Peak and bottom display function

This function constantly detects and updates the maximum and minimum values and allows to hold the display value.
For PSE300, when the △▽ are simultaneously pressed for 1 second or longer, while "holding", the hold value will be reset.

### E Key lock function

This function prevents incorrect operations such as accidentally changing the set value.

### F Zero-out function

This function clears and resets the zero value on the display of measured (differential) pressure within ±7% F.S. of the factory adjusted value.

## Function Details

### G Error indication function

| Error name | Error code PSE200 | Error code PSE300 | Description |
|---|---|---|---|
| Overcurrent error | Er 1 | Er1 | Load current of switch output (OUT1) exceeds 80 mA. |
| | Er 2 | Er2 | Load current of switch output (OUT2) exceeds 80 mA. |
| Residual pressure error | Er 3 | Er3 | Pressure applied during the zero reset operation exceeds ±7% F.S.<br>* After displaying the error code for 3 seconds, the switch automatically returns to the measuring mode. Due to individual product differences, the setting range varies ±4 digits. |
| Applied pressure error | - - - | HHH | Supply pressure exceeds the maximum set (differential) pressure or upper limit of the display pressure. |
| | - - - - | LLL | A sensor may be disconnected or mis-wired. Or, supply pressure is below the minimum set (differential) pressure or lower limit of the display pressure. |
| Auto-shift error | | or | The value measured at the time of auto-shift input is outside the set (differential) pressure range.<br>* After displaying the error code for one second, the switch returns to the measuring mode. |
| System error | Er 5 | Er4 | Internal data error |
| | Er 6 | Er6 | Internal data error |
| | Er 7 | Er7 | Internal data error |
| | Er 8 | Er8 | Internal data error |

### H Copy function (Series PSE200 only)

Information that can be copied includes the following: ① Pressure set values, ② Range settings, ③ Display units, ④ Output modes, ⑤ Response times.

- When CH1 is copied to CH2, CH3, and CH4, information of OUT1 in CH1 will be copied.
- When CH2, CH3, or CH4 is copied to CH1, information of OUT1 in CH2, CH3, or CH4 will be copied only to OUT1 in CH1.

Note) When the copy function is used, the regulating pressure value of the copied channel may change ±1 digit.

### I Auto-identification function (Series PSE200 only)

This function automatically identifies the pressure range of the pressure sensor that is connected to the multi-channel pressure sensor controller, thus eliminating the need of having to reset the range again after replacing the sensor. This function will be activated either when “Aon” is set in the auto-identification mode or when the power is turned back on in that condition. However, this function only works in conjunction with specific pressure sensors (SMC Series PSE53□). When other pressure sensors are used, this function will not work. When using other types of pressure sensors, first set the auto-identification mode to “AoF”, and then proceed to setting the range. Turning the power back on while in the “Aon” setting can cause a malfunction.

### J Anti-chattering function

A large bore cylinder or ejector consumes a large volume of air in operation and may experience a temporary drop in the supply pressure. This function prevents detection of such temporary drops in the supply pressure as an error.

| | Available response time settings |
|---|---|
| **PSE200** | 20 ms, 160 ms, 640 ms |
| **PSE300** | 20 ms, 160 ms, 640 ms, 1280 ms |

<Principle>
This function averages pressure values measured during the response time set by the user and then compares the average pressure value with the pressure set point value to output the result on the switch.

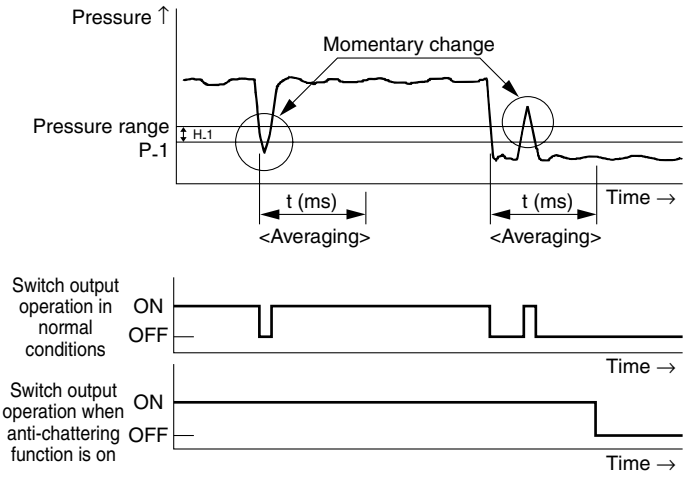


### K Channel selection function (Series PSE200 only)

Pressure value for the selected channel is displayed.

### L Channel scan function (Series PSE200 only)

Pressure values for each channel are displayed by turns at 2-second intervals.

## Function Details

### M Unit display switching function

Display units can be switched with this function.
Units that can be displayed vary depending on the range of the pressure sensors connected to the controller.

**PSE200**

| Pressure range | | For compound pressure | For vacuum | For low pressure | For positive pressure |
|---|---|---|---|---|---|
| Applicable pressure sensor | | **PSE533 PSE543 PSE563** | **PSE531 PSE541 PSE561** | **PSE532** | **PSE530 PSE540 PSE560** |
| Set pressure (differential pressure) range | | −101 to 101 kPa | 10 to −101 kPa | −10 to 100 kPa | −0.1 to 1 MPa |
| PA | kPa | 0.1 | 0.1 | 0.1 | — |
| | MPa | — | — | — | 0.001 |
| GF | kgf/cm² | 0.001 | 0.001 | 0.001 | 0.01 |
| bAr | bar | 0.001 | 0.001 | 0.001 | 0.01 |
| PSI | psi | 0.02 | 0.01 | 0.01 | 0.1 |
| inH | inHg | 0.1 | 0.1 | — | — |
| mmH | mmHg | 1 | 1 | — | — |

**PSE300**

| Pressure range | | For compound pressure | For vacuum | For low pressure | For positive pressure | | For low differential pressure |
|---|---|---|---|---|---|---|---|
| Applicable pressure sensor | | **PSE533 PSE543 PSE563** | **PSE531 PSE541 PSE561** | **PSE532** | **PSE530 PSE540 PSE560** | **PSE564** | **PSE550** |
| Set pressure (differential pressure) range | | −101 to 101 kPa | 10 to −101 kPa | −10 to 100 kPa | −0.1 to 1 MPa | −50 to 500 kPa | −0.2 to 2.00 kPa |
| PA | kPa | 0.2 | 0.1 | 0.1 | — | 1 | 0.01 |
| | MPa | — | — | — | 0.001 | — | — |
| GF | kgf/cm² | 0.002 | 0.001 | 0.001 | 0.01 | 0.01 | — |
| bAr | bar | 0.002 | 0.001 | 0.001 | 0.01 | 0.01 | — |
| PSI | psi | 0.05 | 0.02 | 0.02 | 0.2 | 0.1 | — |
| inH | inHg | 0.1 | 0.1 | — | — | — | — |
| mmH | mmHg | 2 | 1 | — | — | — | 1 $mmH_2O$ |

# Series PSE5□□
# Specific Product Precautions 1

**Be sure to read before handling. Refer to pages 58 and 59 for Safety Instructions and pages 687 to 691 for Pressure Switch Precautions.**

## ■ Pressure Sensors

### Handling

## ⚠ Warning

**1. Do not drop, bump, or apply excessive impact (PSE530, 540: 980 m/s², PSE560: 500 m/s², PSE550: 300 m/s²) while handling. Although the body of the sensor may not be damaged, the inside of the sensor could be damaged and lead to malfunction.**

**2. The tensile strength of the cord is PSE530: 23 N, PSE540, 550, 560: 50 N or less. Applying a greater pulling force to it can cause malfunction. When handling, hold the body of the sensor—do not dangle it from the cord.**

**3. Do not use pressure sensors with corrosive and/or flammable gases or liquids.**

**(PSE530)**

**1. Do not exceed the screw-in torque of 3.5 N·m when installing piping. Exceeding this value may cause malfunctioning of the sensor.**

**2. Connecting the sensor cable (optional)**

Hold the female connector of the sensor cable with your fingers and carefully insert it into the connector.

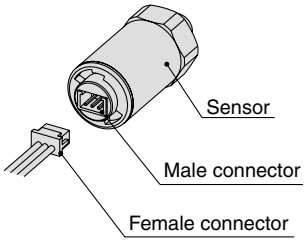


A connector cover is provided as part of the cable assembly (see the figure below). It is designed to keep the female cover in place, first make sure it is facing in the right direction as you slip it over the female connector, then lock it to the sensor body by turning it clockwise. To remove the cover, first unlock it by turning it counterclockwise, then pull back on it. To remove the female connector, grab it with your fingers and pull back on it. Do not pull on the cable.

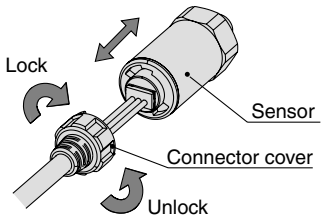


**(PSE540/550)**

**1. Care should be taken when stripping the outer cable covering as the insulator may be accidentally torn or damaged if incorrectly stripped, as shown on the right.**

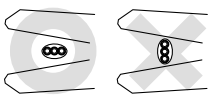

### Wiring

## ⚠ Caution

**1. Connection of sensor connector**

- Cut the sensor cable as illustrated to the right.

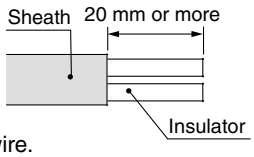


- Referring to the table below, insert each lead wire of the cable at the position marked with a number corresponding to the color of the lead wire.
- Confirm that the numbers on the connector match the colors of the wires and that the wires are inserted to the bottom. Press Part A by hand for temporary fixing.

| Connector no. | Wire core color |
|---|---|
| 1 | Brown (DC (+)) |
| 2 | Not used |
| 3 | Blue (DC (–)) |
| 4 | Black (OUT: 1 to 5 V) |

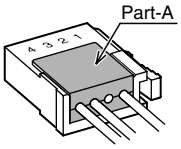


- Press in the central part of Part A vertically with a tool such as pliers.
- A sensor connector cannot be taken apart for reuse once it is crimped. If the wire arrangement is incorrect or if the wire insertion fails, use a new sensor connector.
- For connection to SMC pressure switches, use sensor connectors (ZS-28-C□) or e-con connectors listed below.

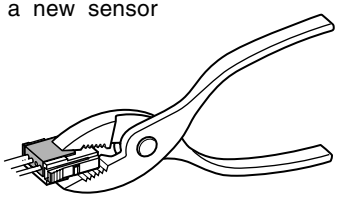

| Series | Sumitomo 3M Ltd. | Tyco Electronic AMP K.K. | OMRON Corp. |
|---|---|---|---|
| PSE53□ | 37104-3101-000FL | 3-1473562-4 | XN2A-1430 |
| PSE54□ | 37104-3101-000FL | 1-1473562-4 | XN2A-1430 |
| PSE55□ | 37104-3101-000FL | 1-1473562-4 | XN2A-1430 |
| PSE56□ | 37104-3101-000FL | 1473562-4 | XN2A-1430 |

- For details about the e-con connector, contact the respective connector manufacturer.

# Series PSE5□□
# Specific Product Precautions 2

**Be sure to read before handling. Refer to pages 58 and 59 for Safety Instructions and pages 687 to 691 for Pressure Switch Precautions.**

## Pressure Source

### ⚠ Warning

**1. Use of toxic, corrosive or flammable gas**
Do not use **toxic and corrosive gas**.
Also, note that the switch is not explosion-proof.

**2. Applicable fluid**
**(PSE530/540/550)**
Do not use for corrosive, flammable gases or fluids.

**(PSE560)**
The fluid contact areas are stainless steel 316L (pressure sensor fittings). Use fluid that will not corrode the materials.
(For corrosiveness of fluid, consult the manufacturer of the fluid.)

**3. Helium leakage test**
**(PSE56□-$^{A2}_{B2}$ only)**
Helium leakage test is conducted on the welding parts. Use a ferrule by Swagelok Company (Swagelok® fittings) as the TSJ fittings and packing, ground, etc. by Swagelok Company (VCR® fittings) as the URJ fittings. If a ferrule, packing or ground by other manufacturers are to be used, conduct helium leakage test before using those products.
∗ Swagelok® and VCR® are trademarks of Swagelok Company.

**4. About intrusion of water or drainage**
**(PSE560)**
Although the pressure sensor of this switch employs a stainless steel diaphragm that would not be damaged by water, there are cases in which the inertial force of sudden irruption at the time of vacuum release after adsorption confirmation causes water, or drainage contained in the air, to strike the pressure sensor and damage it.
In the case that water or drainage occurs, an intermediate orifice can be set up, or an adapter with external deflection (ZS-31-X175, X186) can be mounted to the fitting part of the main body.

## Piping Connection

### ⚠ Caution

**(PSE550)**

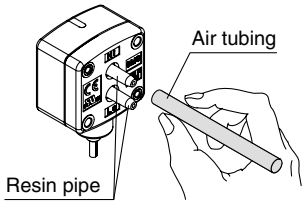


- Cut the air tubing vertically.
- Carefully hold the air tubing and slowly push it into the resin pipe, ensuring that it is inserted by more than 8 mm. For your information, the tensile strength is approx. 25 N when inserted by more than 8 mm.
- Insert the low pressure air tubing into “Lo” pipe, and the high-pressure air tubing into “Hi” pipe.
- In cases where SMC air tubing is not used, make sure the product has similar I.D. accuracy within ø4±0.3 mm.
- Make sure that the air tubing is firmly inserted to avoid possible disconnection. (Tensile strength is approx. 25 N when being inserted 8 mm.)

## Operating Environment

### ⚠ Caution

**1.** When resin piping is used, depending on the fluid, static electricity may occur. When connecting the switch and sensor, please take adequate anti-static electricity measures on the equipment side, and do not use with a grounding that is shared with equipment that generates strong electromagnetic noise or high-frequency waves. This can result in a switch or sensor being damaged by static electricity.

# Series PSE200/300
# Specific Product Precautions 1

**Be sure to read before handling. Refer to pages 58 and 59 for Safety Instructions and pages 687 to 691 for Pressure Switch Precautions.**

## ■ Controllers

### Handling

## ⚠ Warning

**1. Do not drop, bump, or apply excessive impact (PSE200: 980 m/s², PSE300: 100 m/s²) while handling. Although the body of the controller case may not be damaged, the inside of the controller could be damaged and cause malfunction.**

**2. The tensile strength of the power supply/output connection cable is 50 N; that of the pressure sensor lead wire with connector is 25 N. Applying a greater pulling force than the applicable specified tensile strength to either of these components can lead to malfunction. When handling, hold the body of the controller.**

### Mounting

## ⚠ Caution

**(PSE200)**

**The front face of the panel mount conforms to IP65 (IP40 when using the □48 conversion adapter); however, there is a possibility of liquid filtration if the panel mount adapter is not installed securely and properly. Securely fix the adaptor with screws as shown below.**

**Standard**

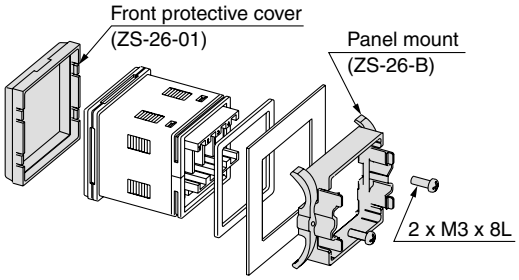


Tighten screws 1/4 to 1/2 turn after the heads are flush with the panel.

**When using □48 conversion adapter**

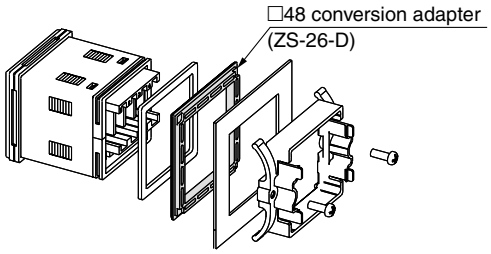


### Handling

## ⚠ Caution

**(PSE300)**

**1. Mounting with bracket**

Mount the bracket on the body with two M3 x 5L mounting screws.

Tighten the bracket mounting screws at a tightening torque of 0.5 to 0.7 N·m.

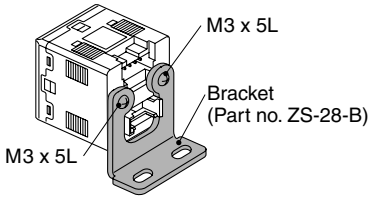


**2. Mounting with panel mount adapter**

Secure the panel mount adapter with two M3 x 8L mounting screws.

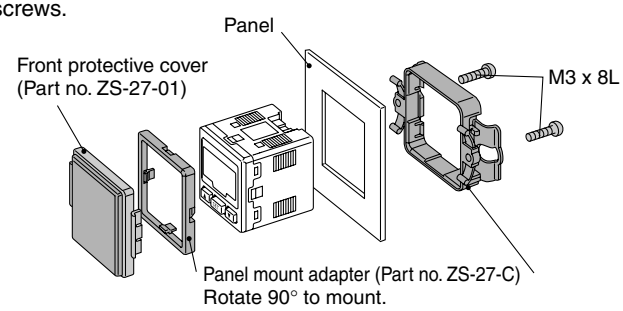


**3. Panel mount adapter removal**

To remove the controller with panel mount adapter from the equipment, remove the two mounting screws, and pull out the controller while pushing the claws outward.

Failure to follow this procedure can cause damage to the controller and panel mount adapter.

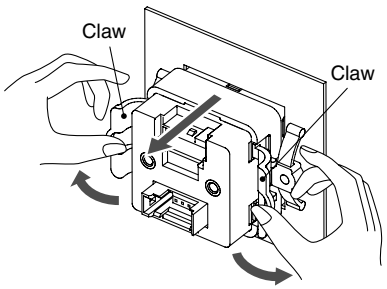


**(PSE300T)**

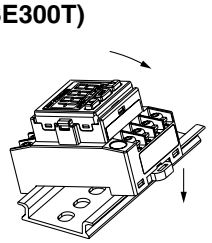

**Figure (a)**

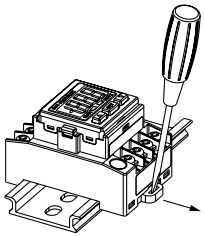

**Figure (b)**

**1. Please affix the main body by hooking the claws of the lower part over the DIN rail and pressing in the direction of the arrows as shown in Figure (a).**

When removing the main body, use a flat head screwdriver or similar tool to pull it in the direction of the arrows as shown in Figure (b).

# Series PSE200/300
# Specific Product Precautions 2

**Be sure to read before handling. Refer to pages 58 and 59 for Safety Instructions and pages 687 to 691 for Pressure Switch Precautions.**

## Connection

## ⚠ Warning

**1. Incorrect wiring can damage the switch and cause malfunction or erroneous switch output. Connections should be done while the power is turned off.**

**2. Do not attempt to insert or pull out the pressure sensor or its connector when the power is on. Switch output may malfunction.**

**3. Wire separately from power lines and high voltage lines, avoiding wiring in the same conduit with these lines. Malfunctions may occur due to noise from these other lines.**

**4. If a commercial switching regulator is used, make sure that the F.G. terminal is grounded.**

## Wiring

## ⚠ Caution

**1. Connection and removal of sensor connector**

- Hold the lever and connector body with two fingers and insert the connector straight into the pin until it is locked with a click sound.
- To remove the connector, pull it out straight while pressing the lever with one finger.

**(PSE200)**

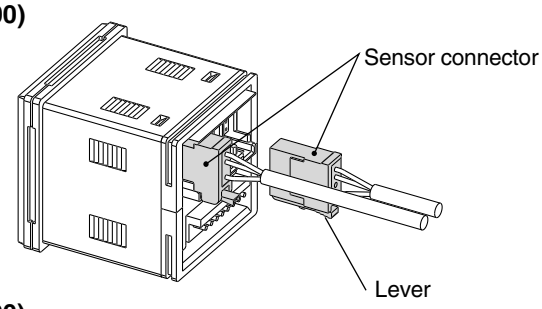


**(PSE300)**

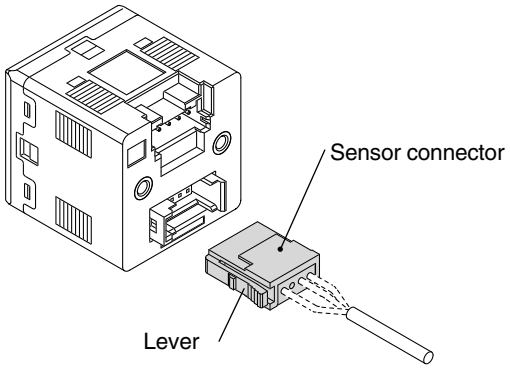


**2. Connection of power supply cable and output cable**

- Securely connect the power supply cable and the output cable to the body until a click is heard.

## Wiring

## ⚠ Caution

**3. Applicable crimping terminal dimensions (PSE300T)**

An M3 terminal screw is used.

If employing a crimping terminal, please use the part shown below.

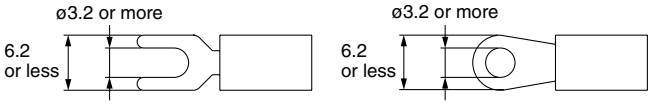


(Unit: mm)

Please tighten the terminal screw with a tightening torque of 0.35 N·m.

## Operating Environment

## ⚠ Warning

**1. Our pressure sensor controllers are CE marked; however, they are not equipped with surge protection against lightning. Lightning surge countermeasures should be applied directly to system components as necessary.**

**(PSE200)**

- **If the product is mounted on a panel, the "IP65" enclosure rating is applicable only to the front parts. Do not use in an environment where oil splashing or spraying are anticipated.**

# Pressure Sensor
# For General Pneumatic Applications
# Series PSE 510

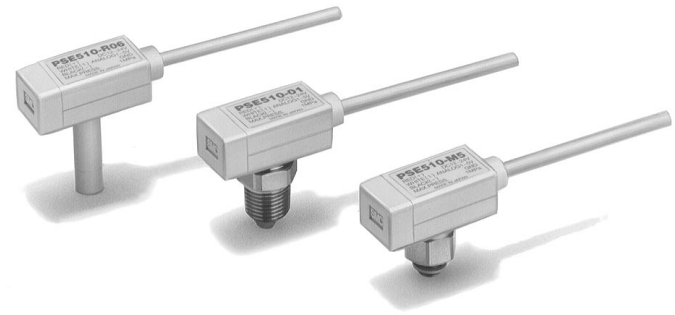

## How to Order

**PSE51 □ — □**

**Operating pressure**

| | |
|---|---|
| **0** | High pressure (0 to 1 MPa) |
| **1** | Vacuum (–101 to 0 kPa) |
| **2** | Low pressure (0 to 100 kPa) |

**Porting**

| | |
|---|---|
| **R06** | ø6 reducer |
| **M5** | M5 X 0.8 |
| **01** | R(PT) 1/8, M5 X 0.8 |
| **T01** | NPTF 1/8, M5 X 0.8 |

## Sensor Specifications/General Pneumatic Applications

| **Model** | | **PSE510-□** | **PSE511-□** | **PSE512-□** |
|---|---|---|---|---|
| **Operating pressure range** | | 0 to 1 MPa | –101 to 0kPa | 0 to 100kPa |
| **Max. pressure** | | 1MPa | 200kPa | |
| **Fluid** | | Air, Non corrosive gases | | |
| **Output specification** | | Analog (1 to 5V, Load impedance: 10kΩ or more) | | |
| **Supply voltage** | | 12 to 24V DC (Ripple ± 10% or less) | | |
| **Current consumption** | | 10mA or less | | |
| **Operating temperature range** | | 0 to 50°C (No condensation) | | |
| **Temperature characteristics (25°C standard)** | **25 ± 10°C** | ± 1%F.S. or less | | |
| | **0 to 50°C** | ± 1.5% F.S. or less | | |
| **Repeatability** | | ± 0.3% F.S. or less | | |
| **Voltage resistance** | | Between external terminal and housing 1000V AC, 50/60Hz for 1 min. | | |
| **Insulation resistance** | | Between external terminal and housing 2MΩ (500V DC by megameter) | | |
| **Vibration resistance** | | 10 to 500Hz Pulse width: 1.5mm or acceleration 98 $m/s^2$ (at the smaller vibration) to X, Y, Z direction (2 hours) | | |
| **Shock resistance** | | 980 $m/s^2$ to X, Y, Z direction (3 times for each direction) | | |
| **Protective construction** | | IP40 | | |

Note) When pressure sensor PSE510 series is connected to controller PSE100 series, display range is as series PSE100.

## Process Connection

| **Model** | | **R06** | **M5** | **01** | **T01** |
|---|---|---|---|---|---|
| **Material** | **Housing** | Resin housing: PBT | Resin housing: PBT<br>Fitting: Stainless steel (SUS303) | Resin housing: PBT<br>Fitting: C3604BD<br>(Electroless nickel plated) | Resin housing: PBT<br>Fitting: C3604BD<br>(Electroless nickel plated) |
| | Pressure sensor area | Pressure sensor: Silicon, O ring: NBR | | | |
| **Lead wire** | | Oil proof vinyl insulation ø2.55, 0.15$mm^2$ X 3 wire (Brown, Blue, Black) 3000mm | | | |
| **Port size** | | ø6 reducer | M5 X 0.8 | R(PT) 1/8, M5 X 0.8 | NPTF1/8, M5 X 0.8 |
| **Weight (Excluding lead wire)** | | Approx. 7g | Approx. 10g | Approx. 12g | |

## Internal Circuit

Lead wire colors inside ( ) are those prior to conformity with IEC standards.

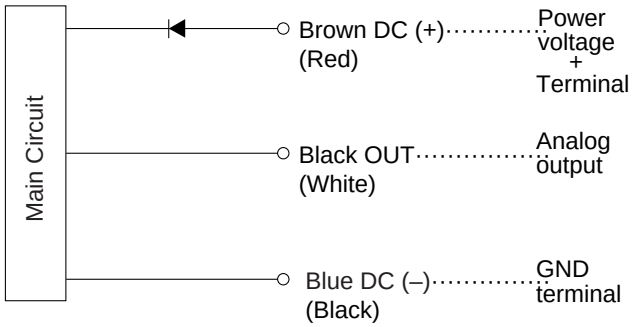


## ⚠Caution

**Be sure to read before handling. Refer to p.0-26 and 0-27 for Safety Instructions and common precautions on the products mentioned in this catalog, and refer to p.3.0-7 to 3.0-9 for precautions on every series.**



## Dimensions

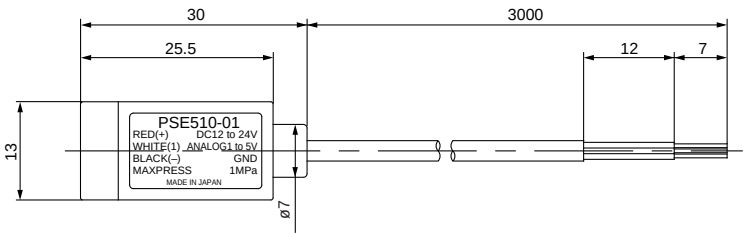


### 01, T01

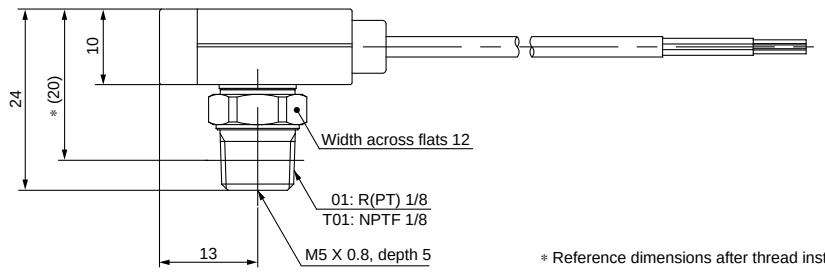


∗ Reference dimensions after thread installation

### M5

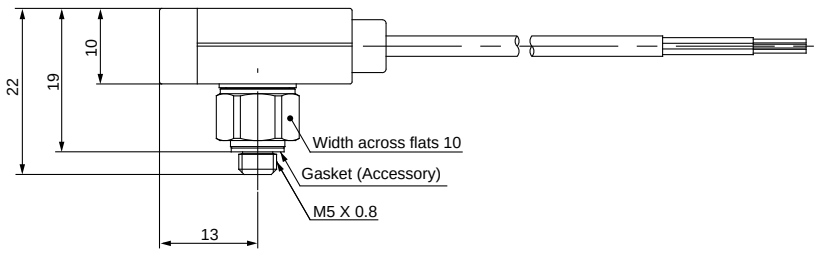


### R06

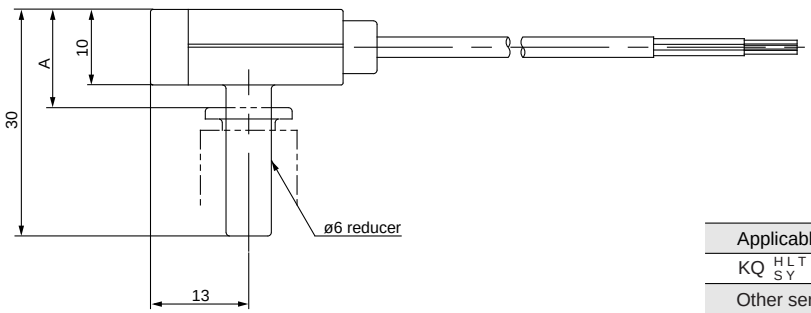


| Applicable fitting | A |
|---|---|
| KQ $^{H}_{S}{}^{L}_{Y}{}^{T}$ 06-M5 | 16 |
| Other series KQ, KS | 13 |
| KJ Series | 14.5 |
| KJ (-X20) Series | 16 |

# Pressure Sensor
# For General Purpose Fluid Applications
# Series PSE520

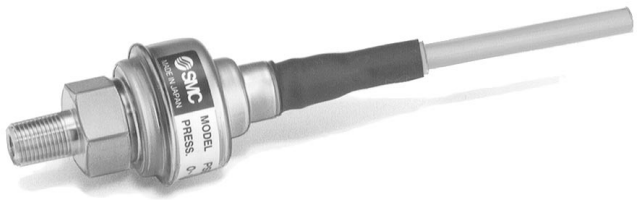

## How to Order

**PSE52 0 –** ☐

**Operating pressure**

| | |
|---|---|
| **0** | High pressure (0 to 1 MPa) |

**Porting**

| | |
|---|---|
| **01** | R(PT) 1/8, M5 X 0.8 |
| **02** | R(PT) 1/4, M5 X 0.8 |
| **T01** | NPTF 1/8, M5 X 0.8 |
| **T02** | NPTF 1/4, M5 X 0.8 |

## Sensor Specifications/General Purpose Fluid Applications

| **Model** | | **PSE520-01** | **PSE520-02** | **PSE520-T01** | **PSE520-T02** |
|---|---|---|---|---|---|
| **Operating pressure range** | | 0 to 1 MPa | | | |
| **Max. pressure** | | 2MPa | | | |
| **Fluid** | | Fluid non corrosive to SUS304, SUS630 | | | |
| **Output specification** | | Analog (1 to 5V, Load impedance: 10kΩ or more) | | | |
| **Supply voltage** | | 12 to 24 V DC (Ripple ± 10% or less) | | | |
| **Current consumption** | | 15mA or less | | | |
| **Operating temperature range** | | –10 to 70°C (No condensation or frost formation) | | | |
| **Temperature characteristics (25°C standard)** | **25 ± 10°C** | ± 1% F.S. or less | | | |
| | **–10 to 70°C** | ± 3% F.S. or less | | | |
| **Repeatability** | | ± 0.3% F.S. or less | | | |
| **Voltage resistance** | | Between GND terminal and housing 250V AC for 1 min. | | | |
| **Insulation resistance** | | Between external terminal and housing 100MΩ (50V DC by megameter) | | | |
| **Vibration resistance** | | 10 to 55Hz Pulse width: 1.5mm to X, Y, Z direction (2 hours) | | | |
| **Shock resistance** | | 294 $m/s^2$ (11ms or less) to X, Y, Z direction (3 times for each direction) | | | |
| **Protective construction** | | IP65 | | | |
| **Material** | **Housing** | Housing: Stainless steel (SUS304), Fitting: Stainless steel (SUS304) | | | |
| | Pressure sensor area | Diaphragm: Stainless steel (SUS630) | | | |
| **Lead wire** | | Special elastic polyvinyl chloride ø6, 0.34$mm^2$, 3 wire, 3000mm | | | |
| **Port size** | | R(PT)1/8, M5 X 0.8 | R(PT)1/4, M5 X 0.8 | NPTF1/8, M5 X 0.8 | NPTF1/4, M5 X 0.8 |
| **Weight** | | Approx. 220g | | | |

Note) When pressure sensor PSE 520 series is connected to controller PSE100 series, display range is as PSE100 series.

## Internal Circuit

Lead wire colors inside ( ) are those prior to conformity with IEC standards.

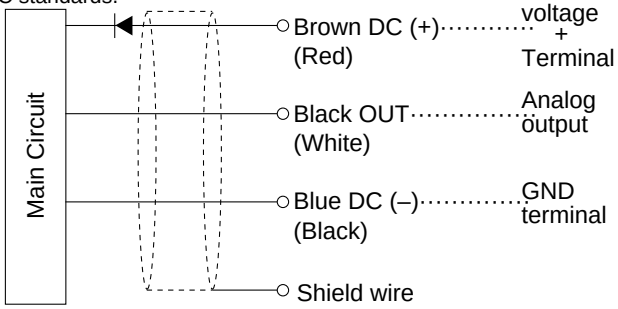


## ⚠Caution

**Be sure to read before handling. Refer to p.0-26 and 0-27 for Safety Instructions and common precautions on the products mentioned in this catalog, and refer to p.3.0-7 to 3.0-9 for precautions on every series.**



## Dimensions

### PSE520-01, T01

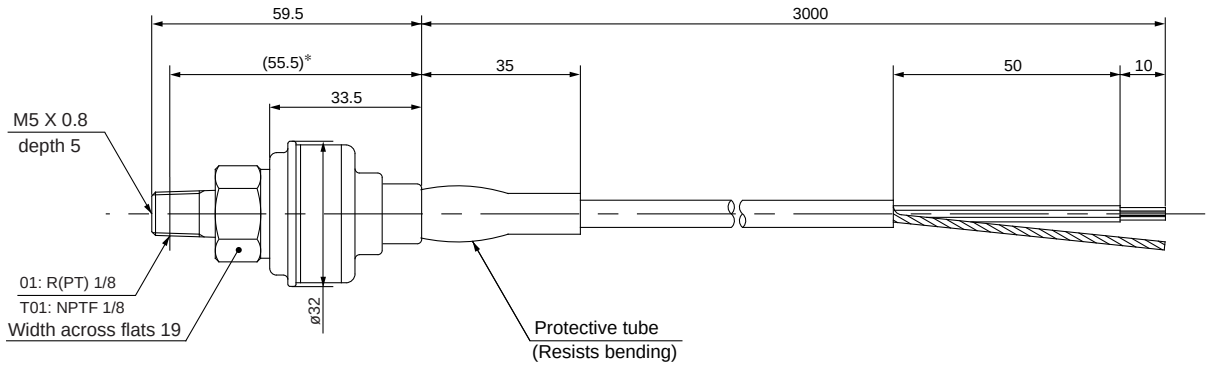


### PSE520-02, T02

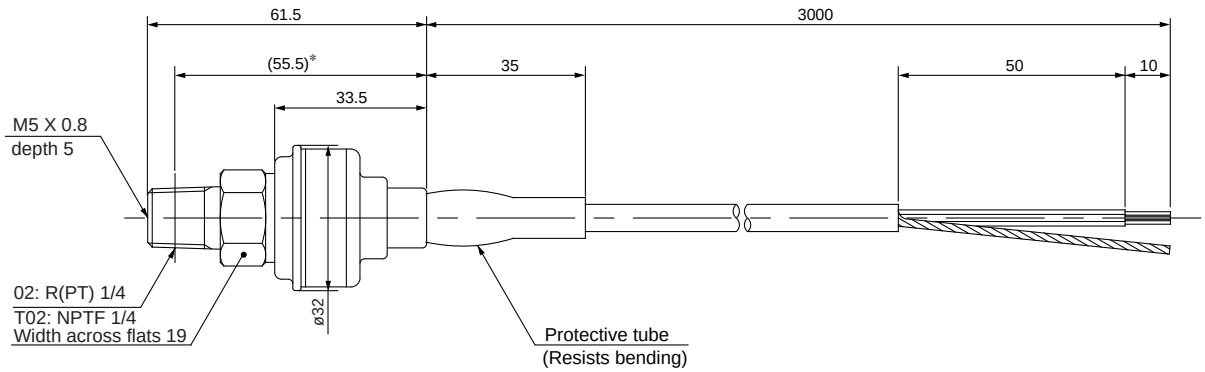


∗ Reference dimensions after thread installation

# Safety Instructions

These safety instructions are intended to prevent a hazardous situation and/or equipment damage. These instructions indicate the level of potential hazard by labels of **"Caution", "Warning"** or **"Danger"**. To ensure safety, be sure to observe ISO 4414 Note 1), JIS B 8370 Note 2) and other safety practices.

⚠ **Caution :** Operator error could result in injury or equipment damage.

⚠ **Warning :** Operator error could result in serious injury or loss of life.

⚠ **Danger :** In extreme conditions, there is a possible result of serious injury or loss of life.

Note 1) ISO 4414: Pneumatic fluid power--General rules relating to systems.
Note 2) JIS B 8370: General Rules for Pneumatic Equipment

## ⚠ Warning

**1. The compatibility of pneumatic equipment is the responsibility of the person who designs the pneumatic system or decides its specifications.**

Since the products specified here are used in various operating conditions, their compatibility for the specific pneumatic system must be based on specifications or after analysis and/or tests to meet your specific requirements. The expected performance and safety assurance will be the responsibility of the person who has determined the compatibility of the system. This person should continuously review the suitability of all items specified, referring to the latest catalog information with a view to giving due consideration to any possibility of equipment failure when configuring a system.

**2. Only trained personnel should operate pneumatically operated machinery and equipment.**

Compressed air can be dangerous if an operator is unfamiliar with it. Assembly, handling or repair of pneumatic systems should be performed by trained and experienced operators.

**3. Do not service machinery/equipment or attempt to remove components until safety is confirmed.**

1. Inspection and maintenance of machinery/equipment should only be performed once measures to prevent falling or runaway of the driver objects have been confirmed.
2. When equipment is to be removed, confirm the safety process as mentioned above. Cut the supply pressure for this equipment and exhaust all residual compressed air in the system.
3. Before machinery/equipment is restarted, take measures to prevent shooting-out of cylinder piston rod, etc.

**4. Contact SMC if the product is to be used in any of the following conditions:**

1. Conditions and environments beyond the given specifications, or if product is used outdoors.
2. Installation on equipment in conjunction with atomic energy, railway, air navigation, vehicles, medical equipment, food and beverages, recreation equipment, emergency stop circuits, clutch and brake circuits in press applications, or safety equipment.
3. An application which has the possibility of having negative effects on people, property, or animals, requiring special safety analysis.

# Common Precautions

**Be sure to read before handling.**
**For detailed precautions on every series, refer to main text.**

## Selection

### ⚠ Warning

**1. Confirm the specifications.**

Products represented in this catalog are designed for use in compressed air appllications only (including vacuum), unless otherwise indicated.
Do not use the product outside their design parameters.
Please contact SMC when using the products in applications other than compressed air (including vacuum).

## Mounting

### ⚠ Warning

**1. Instruction manual**

Install the products and operate them only after reading the instruction manual carefully and understanding its contents. Also keep the manual where it can be referred to as necessary.

**2. Securing the space for maintenance**

When installing the products, please allow access for maintenance.

**3. Tightening torque**

When installing the products, please follow the listed torque specifications.

## Piping

### ⚠ Caution

**1. Before piping**

Make sure that all debris, cutting oil, dust, etc, are removed from the piping.

**2. Wrapping of pipe tape**

When screwing piping or fittings into ports, ensure that chips from the pipe threads or sealing material do not get inside the piping. Also, when the pipe tape is used, leave 1.5 to 2 thread ridges exposed at the end of the threads.

## Air Supply

### ⚠ Warning

**1. Operating fluid**

Please consult with SMC when using the product in applications other than compressed air (including vacuum).
Regarding products for general fluid, please ask SMC about applicable fluids.

**2. Install an air dryer, aftercooler, etc.**

Excessive condensate in a compressed air system may cause valves and other pneumatic equipment to malfunction.
Installation of an air dryer, after cooler etc. is recommended.

**3. Drain flushing**

If condensate in the drain bowl is not emptied on a regular basis, the bowl will over flow and allow the condensate to enter the compressed air lines.
If the drain bowl is difficult to check and remove, it is recommended that a drain bowl with the auto-drain option be installed.
For compressed air quality, refer to “Air Preparation Equipment” catalog.

**4. Use clean air**

If the compressed air supply is contaminated with chemicals, cynthetic materials, corrosive gas, etc., it may lead to break down or malfunction.

## Operating Environment

### ⚠ Warning

**1. Do not use in environments where the product is directly exposed to corrosive gases, chemicals, salt water, water or steam.**

**2. Do not expose the product to direct sunlight for an extended period of time.**

**3. Do not use in a place subject to heavy vibrations and/or shocks.**

**4. Do not mount the product in locations where it is exposed to radiant heat.**

## Maintenance

### ⚠ Warning

**1. Maintenance procedures are outlined in the operation manual.**

Not following proper procedures could cause the product to malfunction and could lead to damage to the equipment or machine.

**2. Maintenance work**

If handled improperly, compressed air can be dangerous.
Assembly, handling and repair of pneumatic systems should be performed by qualified personnel only.

**3. Drain flushing**

Remove drainage from air filters regularly. (Refer to the specifications.)

**4. Shut-down before maintenance**

Before attempting any kind of maintenance make sure the supply pressure is shut of and all residual air pressure is released from the system to be worked on.

**5. Start-up after maintenance and inspection**

Apply operating pressure and power to the equipment and check for proper operation and possible air leaks. If operation is abnormal, please verify product set-up parameters.

**6. Do not make any modifications to be product.**

Do not take the product apart.

# Quality Assurance Information (ISO 9001, ISO 14001)

## Reliable quality of products in the global market

To enable our customers throughout the world to use our products with even greater confidence, SMC has obtained certification for international standards “ISO 9001” and “ISO 14001”, and created a complete structure for quality assurance and environmental controls. SMC products pursue to meet its customers’ expectations while also considering company’s contribution in society.

### SMC’s quality control system

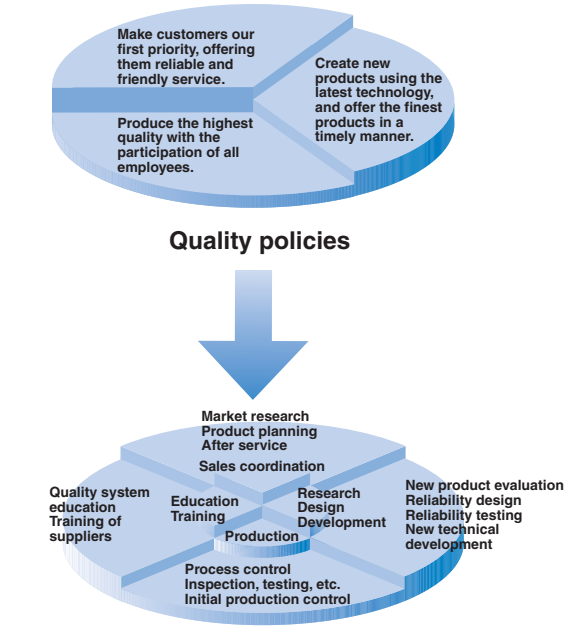


**Quality management system**

### ISO 9001

This is an international standard for quality control and quality assurance. SMC has obtained a large number of certifications in Japan and overseas, providing assurance to our customers throughout the world.





**Environmental management system**

### ISO 14001

This is an international standard related to environmental management systems and environmental inspections. While promoting environmentally friendly automation technology, SMC is also making diligent efforts to preserve the environment.





# SMC Product Conforming to Inter

## SMC products complying with EN/ISO, CSA/UL standards are supporting



CE Mark

The CE mark indicates that machines and components meet essential requirements of all the EC Directives applied.
It has been obligatory to apply CE marks indicating conformity with EC Directives when machines and components are exported to the member Nations of the EU.
Once “A manufacturer himself” declares a product to be safe by means of CE marking (declaration of conformity by manufacturer), free distribution inside the member Nations of the EU is permissible.

### ■ CE Mark

SMC provides CE marking to products to which EMC and Low Voltage Directives have been applied, in accordance with CETOP (European hydraulics and pneumatics committee) guide lines.

### ■ As of February 1998, the following 18 countries will be obliged to conform to CE mark legislation

Iceland, Ireland, United Kingdom, Italy, Austria, Netherlands, Greece, Liechtenstein, Sweden, Spain, Denmark, Germany, Norway, Finland, France, Belgium, Portugal, Luxembourg

### ■ EC Directives and Pneumatic Components

**• Machinery Directive**

The Machinery Directive contains essential health and safety requirements for machinery, as applied to industrial machines e.g. machine tools, injection molding machines and automatic machines. Pneumatic equipment is not specified in Machinery Directive. However, the use of SMC products that are certified as conforming to EN Standards, allows customers to simplify preparation work of the Technical Construction File required for a Declaration of Conformity.

**• Electromagnetic Compatibility (EMC) Directive**

The EMC Directive specifies electromagnetic compatibility. Equipment which may generate electromagnetic interference or whose function may be compromised by electromagnetic interference is required to be immune to electromagnetic affects (EMS/immunity) without emitting excessive electromagnetic affects (EMI/emission).

**• Low Voltage Directive**

This directive is applied to products, which operate above 50 VAC to 1000 VAC and 75 VDC to 1500 VDC operating voltage, and require electrical safety measures to be introduced.

**• Simple Pressure Vessels Directive**

This directive is applied to welded vessels whose maximum operating pressure (PS) and volume of vessel (V) exceed 50 bar/L. Such vessels require EC type examination and then CE marking.

# national Standards

you to comply with EC directives and CSA/UL standards.



Mark of compliance for CSA/UL

Mark of compliance for CSA

NRTL /C

**■ CSA Standards & UL Standards**

UL and CSA standards have been applied in North America (U.S.A. and Canada) symbolizing safety of electric products, and are defined to mainly prevent danger from electric shock or fire, resulting from trouble with electric products. Both UL and CSA standards are acknowledged in North America as the first class certifying body. They have a long experience and ability for issuing product safety certificate. Products approved by CSA or UL standards are accepted in most states and governments beyond question.
Since CSA is a test certifying body as the National Recognized Testing Laboratory (NRTL) within the jurisdiction of Occupational Safety and Health Administration (OSHA), SMC was tested for compliance with CSA Standards and UL Standards at the same time and was approved for compliance with the two Standards. The above CSA NRTL/C logo is described on a product label in order to indicate that the product is approved by CSA and UL Standards.

**■ TSSA (MCCR) Registration Products**

TSSA is the regulation in Ontario State, Canada. The products that the operating pressure is more than 5 psi (0.03 MPa) and the piping size is bigger than 1 inch. fall into the scope of TSSA regulation.

**Products conforming to CE Standard**

**With CE symbol for simple visual recognition**

In this catalog each accredited product series is indicated with a CE mark symbol. However, in some cases, every available models may not meet CE compliance. Please visit our web site for the latest selection of available models with CE mark.

**http://www.smcworld.com**