EFFECTIVE: 11-JUN-14	DIMENSION PRINT ODP WITH MULTI-MOUNT BASE FRAME: 143-5T/56HZ BASIC TYPE: DE	PRINT: 07-3117
SUPERSEDES: 07-MAY-14		SHEET: 1 OF 1

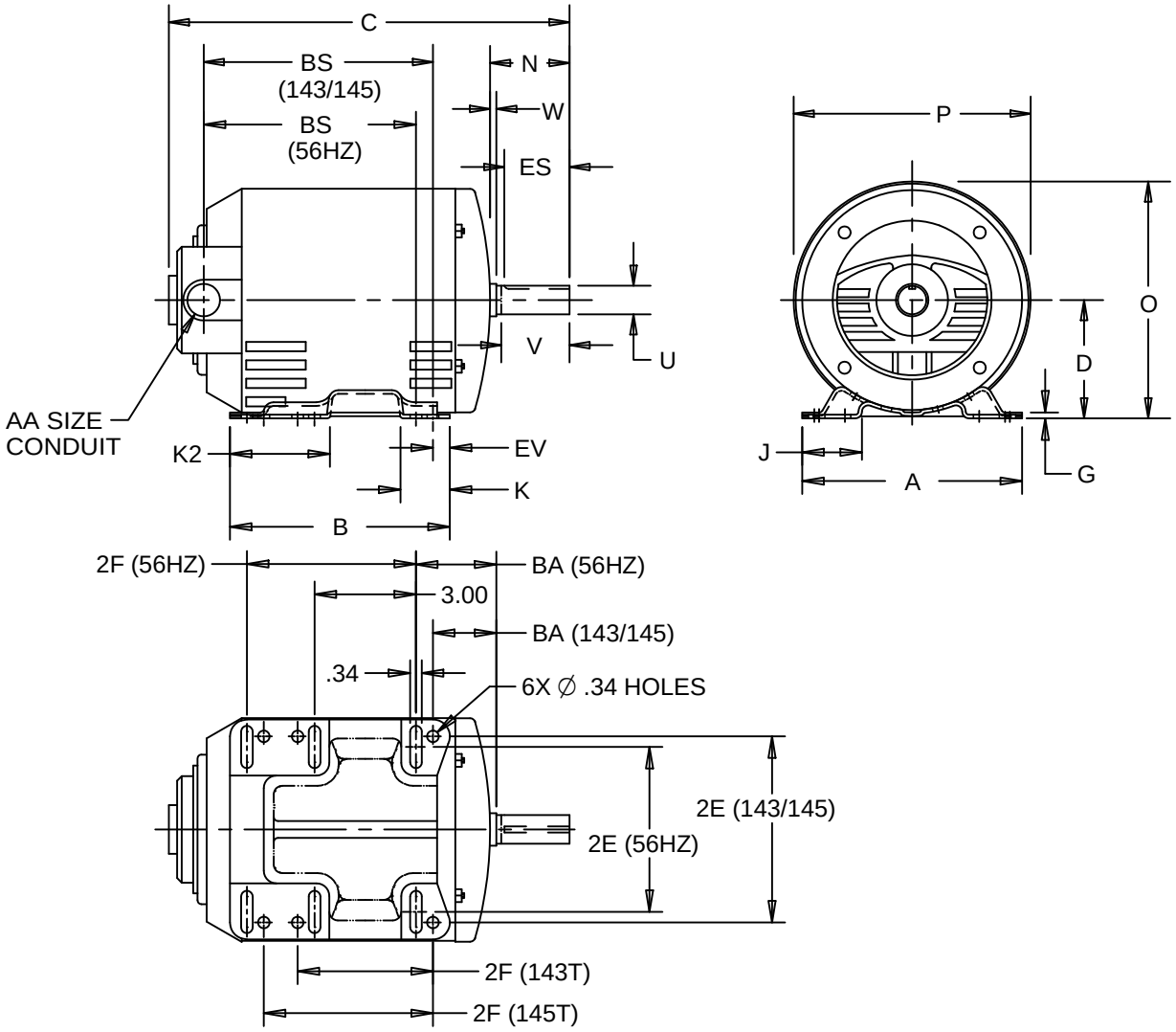

ALL DIMENSIONS ARE IN INCHES AND MILLIMETERS

	UNITS	A	B	C	D -.06	G	J	K	K2	N
	IN	6.50	6.50	12.84	3.50	.13	1.75	1.75	3.25	2.31
	MM	165	165	326	89	3	44	44	83	59

	UNITS	O	P [2]	U -.0005	V MIN	W	AA	ES MIN	EV	SQ KEY
	IN	6.72	6.44	.8750	2.00	.06	3/4 NPT	1.41	.50	.188
	MM	171	164	22.225	51	2		36	13	4.78

	FRAME	UNITS	2E ±.03	2F ±.03	BA	BS
	56HZ (6.50")	IN	4.88	5.00	2.75	6.41
		MM	124	127	70	163
	143T (6.50")	IN	5.50	4.00	2.25	6.91
		MM	140	102	57	176
	145T (6.50")	IN	5.50	5.00	2.25	6.91
		MM	140	127	57	176

1. ALL ROUGH DIMENSIONS MAY VARY BY .25" DUE TO CASTING AND/OR FABRICATION VARIATIONS.
2. LARGEST MOTOR WIDTH.
3: TOLERANCES SHOWN ARE IN INCHES ONLY.

Nidec Motor Corporation
St. Louis, Missouri

INFORMATION DISCLOSED ON THIS DOCUMENT
IS CONSIDERED PROPRIETARY AND SHALL NOT BE
REPRODUCED OR DISCLOSED WITHOUT WRITTEN
CONSENT OF NIDEC MOTOR CORPORATION

ISSUED BY	R. KING
APPROVED BY	J. HAGENE

IHP_DP_NMCA (MAR-2011) SOLIDEDGE