EFFECTIVE: 31-AUG-17	DIMENSION PRINT OPEN DRIP PROOF FRAME: 280TS BASIC TYPE: D	PRINT: 07-2201
SUPERSEDES: 16-MAR-11		SHEET: 1 OF 1

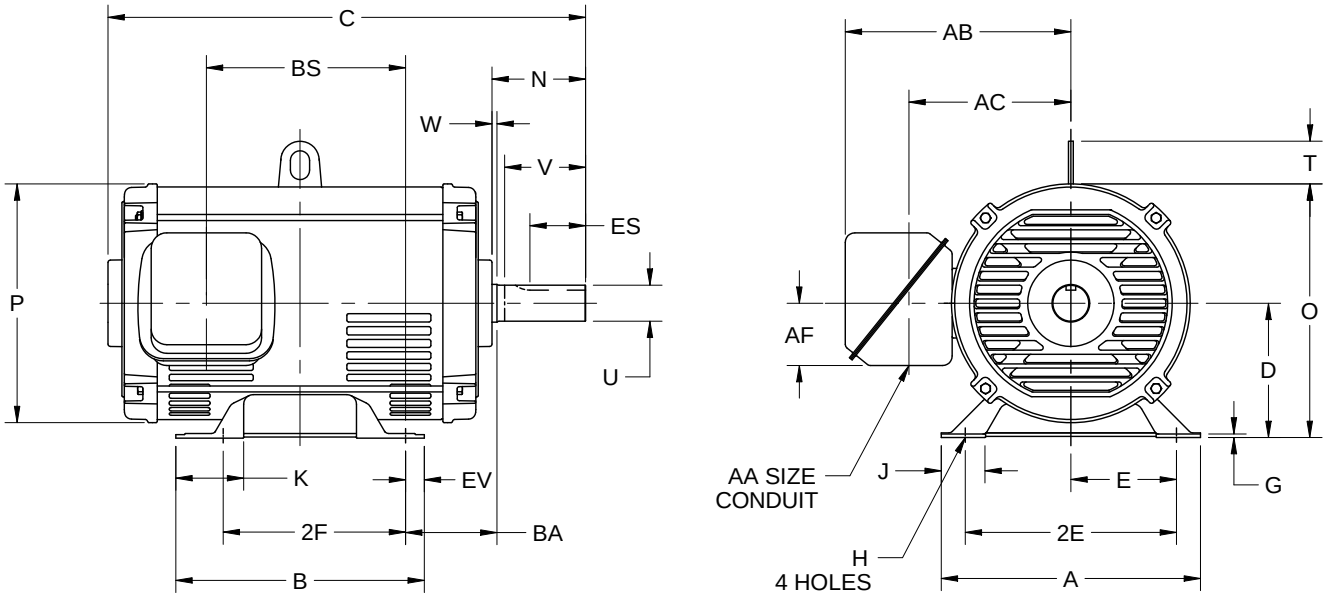

	UNITS	A	B	C	D -.06	E	2E ±.03	G	H +.05	J	K	N
	IN	13.50	12.94	23.50	7.00	5.50	11.00	.19	.53	2.31	3.53	3.50
	MM	343	329	597	178	140	279	5	13	59	90	89

	UNITS	O	P^2	T	U -.001	V MIN	W	AA	AB	AC	AF	BA
	IN	13.19	12.44	2.25	1.625	3.00	.25	2.00	11.75	8.44	3.25	4.75
	MM	335	316	57	41.28	76	6		298	214	83	121

	UNITS	BS	ES MIN	EV	SQ KEY
	IN	10.38	1.91	.97	.375
	MM	264	49	25	9.53

	FRAME	UNITS	2F ±.03
	284TS	IN	9.50
		MM	241
	286TS	IN	11.00
		MM	279

1. ALL ROUGH DIMENSIONS MAY VARY BY .25" DUE TO CASTING AND/OR FABRICATION VARIATIONS.
2. LARGEST MOTOR WIDTH.
3. TOLERANCE UNITS ARE IN INCHES ONLY.
4. STANDARD ASSEMBLY POSITION F-1 IS SHOWN. F-2 IS PROVIDED WHEN SPECIFIED. CONDUIT OPENINGS MAY BE LOCATED IN STEPS OF 90° REGARDLESS OF LOCATION. STANDARD AS SHOWN WITH CONDUIT OPENING DOWN.
5. FRAME REFERENCE: 15.375/284/286

Nidec Motor Corporation
St. Louis, Missouri

INFORMATION DISCLOSED ON THIS DOCUMENT IS CONSIDERED PROPRIETARY AND SHALL NOT BE REPRODUCED OR DISCLOSED WITHOUT WRITTEN CONSENT OF NIDEC MOTOR CORPORATION

ISSUED BY	R. MARTINEZ
APPROVED BY	K. GARZA

IHP_DP_NMCA (MAR-2011) SOLIDEDGE