EFFECTIVE: 08-JUN-21	**DIMENSION PRINT** **OPEN DRIP PROOF** **FRAME: 364, 365TS** **BASIC TYPE: FD, DE, DI**	PRINT: 07-3401
SUPERSEDES: 30-JAN-20		SHEET: 1 OF 1

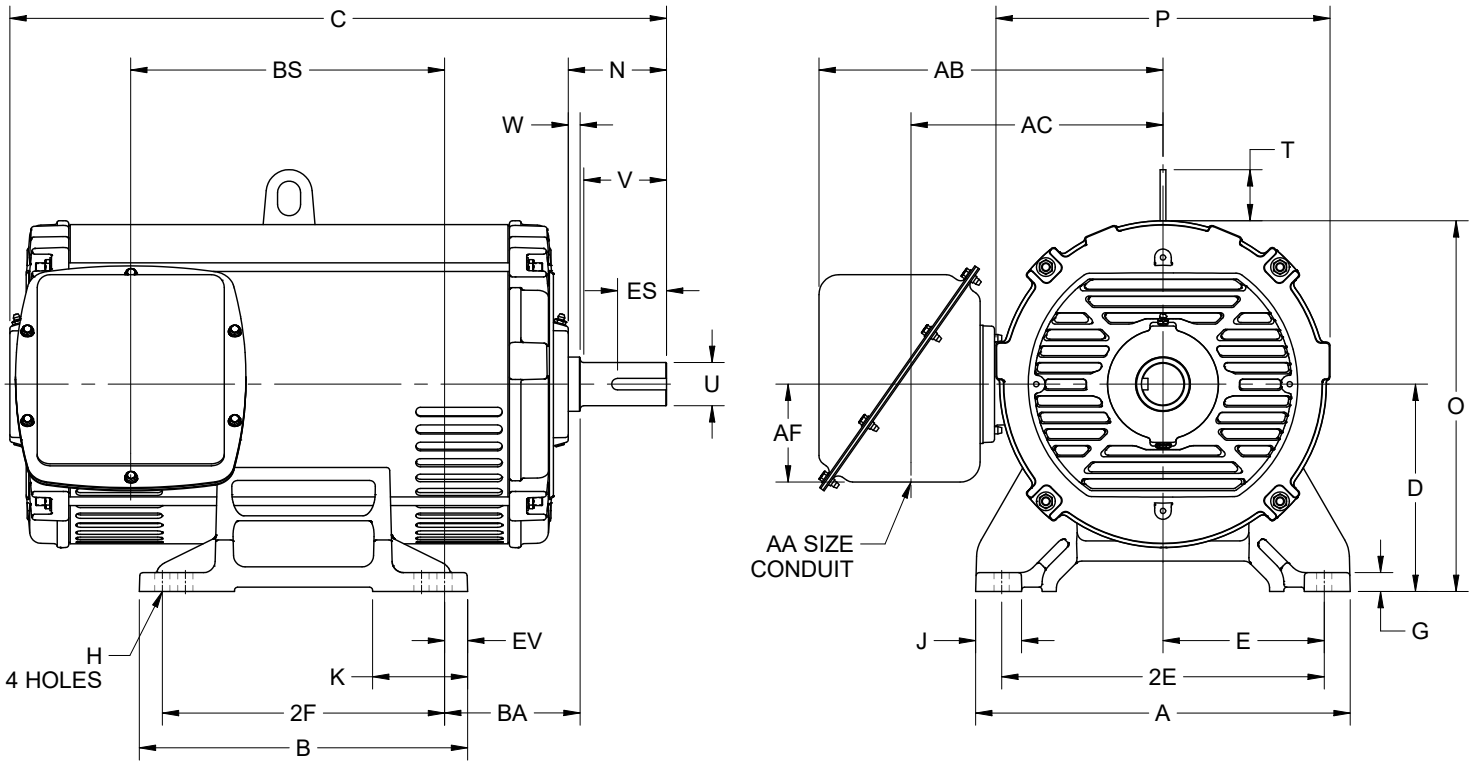

ALL DIMENSIONS ARE IN INCHES AND MILLIMETERS

UNITS	A	B	D -.06	E	2E ±.03	G	H +.05	J	K	N	O	P [2]
IN	16.25	14.25	9.00	7.00	14.00	.81	.66	2.00	4.13	4.25	16.09	14.50
MM	413	362	229	178	356	21	17	51	105	108	409	368

UNITS	T	U -.001	V MIN	W	AA	AB	AC	AF	BA	ES MIN	EV	SQ KEY
IN	2.22	1.875	3.50	.50	3.00	14.94	10.94	4.25	5.88	2.03	1.00	.500
MM	56	47.63	89	13		379	278	108	149	52	25	12.70

FRAME	UNITS	2F ±.03	C	BS
364TS	IN	11.25	26.50	11.63
	MM	286	673	295
365TS	IN	12.25	28.50	13.63
	MM	311	724	346

1. DIMENSIONS MAY VARY .25" DUE TO CASTING AND/OR FABRICATION VARIATIONS
2. LARGEST MOTOR WIDTH
3. THE CONDUIT BOX MAY BE LOCATED ON EITHER SIDE OF THE MOTOR. THE CONDUIT OPENINGS MAY BE LOCATED IN STEPS OF 90° REGARDLESS OF LOCATION. STANDARD LOCATION IS SHOWN WITH THE CONDUIT OPENING DOWN
4. TOLERANCES ARE SHOWN IN INCHES ONLY
5. FRAME REFERENCE: 17.500/364//19.500/365

IHP_DP_NMCA (MAR-2011) SOLIDEDGE

07-3401/A

Nidec Motor Corporation
St. Louis, Missouri

INFORMATION DISCLOSED ON THIS DOCUMENT IS CONSIDERED PROPRIETARY AND SHALL NOT BE REPRODUCED OR DISCLOSED WITHOUT WRITTEN CONSENT OF NIDEC MOTOR CORPORATION

ISSUED BY	L. ALBELDAÑO
APPROVED BY	O. PEREZ