EFFECTIVE: 13-JAN-23	DIMENSION PRINT OPEN DRIP PROOF-WITH WORLD MOTOR O/B FRAME: 400TS BASIC TYPE: R	PRINT: 07-3551
SUPERSEDES: NEW		SHEET: 1 OF 1

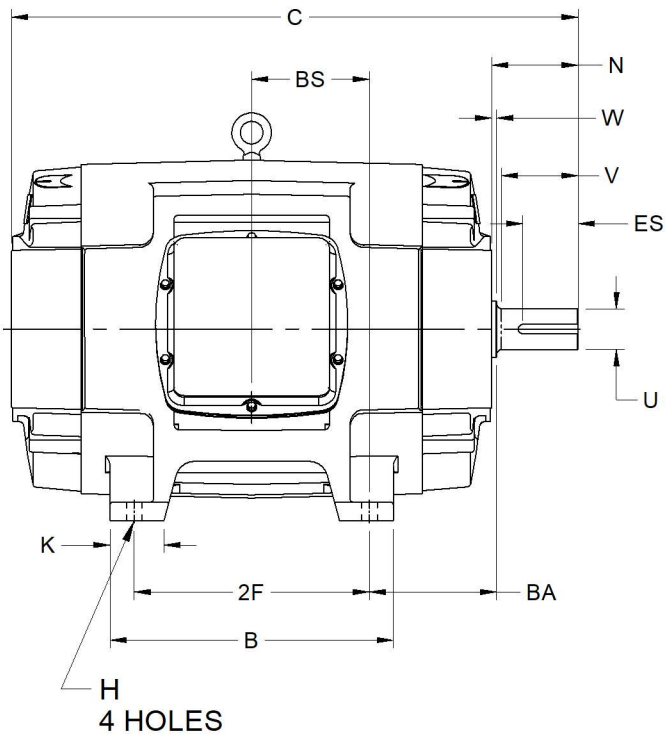

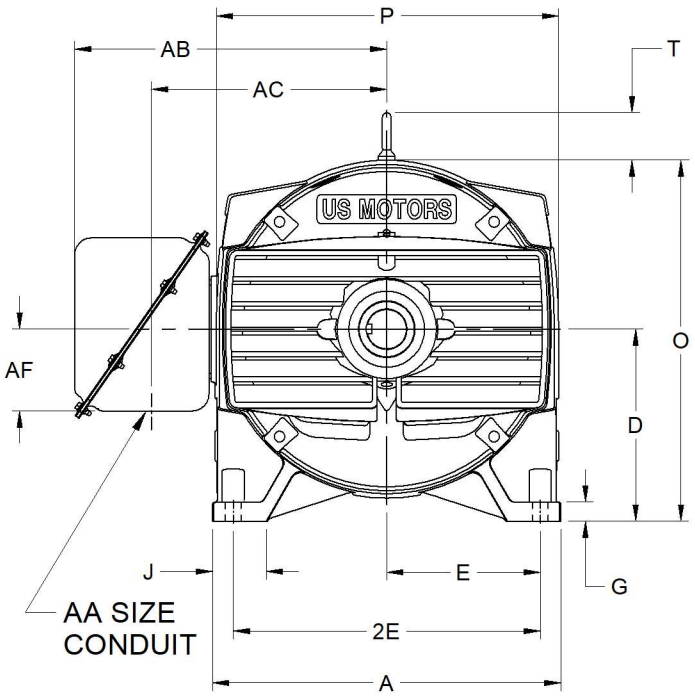

ALL DIMENSIONS ARE IN INCHES AND MILLIMETERS

	UNITS	A	D -.06	E	2E ±.03	G	H +.05	J	K	N	O	P [2]
	IN	18.00	10.00	8.00	16.00	1.00	.81	2.88	2.78	4.50	18.78	17.88
	MM	457	254	203	406	25	21	73	71	114	477	454

	UNITS	T	U -.001	V MIN	W	AA	AB	AC	AF	BA	ES MIN	SQ KEY
	IN	2.50	2.125	4.00	.25	3.00	16.28	12.29	4.25	6.63	2.78	.500
	MM	63	53.98	102	6		413	312	108	168	71	12.70

	FRAME	UNITS	B	C	2F ±.03	BS
	404TS	IN	14.75	29.50	12.25	6.13
		MM	375	745	311	156
	405TS	IN	16.25	31.00	13.75	6.88
		MM	413	787	349	175

1. ALL ROUGH DIMENSIONS MAY VARY BY .25" DUE TO CASTING AND/OR FABRICATION VARIATIONS.
2. LARGEST MOTOR WIDTH.
3. TOLERANCE UNITS ARE IN INCHES ONLY.
4. STANDARD ASSEMBLY POSITION F-1 IS SHOWN. F-2 IS PROVIDED WHEN SPECIFIED. CONDUIT OPENINGS MAY BE LOCATED IN STEPS OF 90° REGARDLESS OF LOCATION. STANDARD AS SHOWN WITH CONDUIT OPENING DOWN.

07-3551/-

Nidec Motor Corporation
St. Louis, Missouri

INFORMATION DISCLOSED ON THIS DOCUMENT IS CONSIDERED PROPRIETARY AND SHALL NOT BE REPRODUCED OR DISCLOSED WITHOUT WRITTEN CONSENT OF NIDEC MOTOR CORPORATION

ISSUED BY
D. CISNEROS
APPROVED BY
E. OVIEDO

IHP_DP_NMCA (MAR-2011) SOLIDEDGE