EFFECTIVE: 03-AUG-18	DIMENSION PRINT OPEN DRIP PROOF WITH OVERSIZE CONDUIT BOX FRAME: 254, 256T BASIC TYPE: D	PRINT: 07-3290-01
SUPERSEDES: 15-JUL-16		SHEET: 1 OF 1

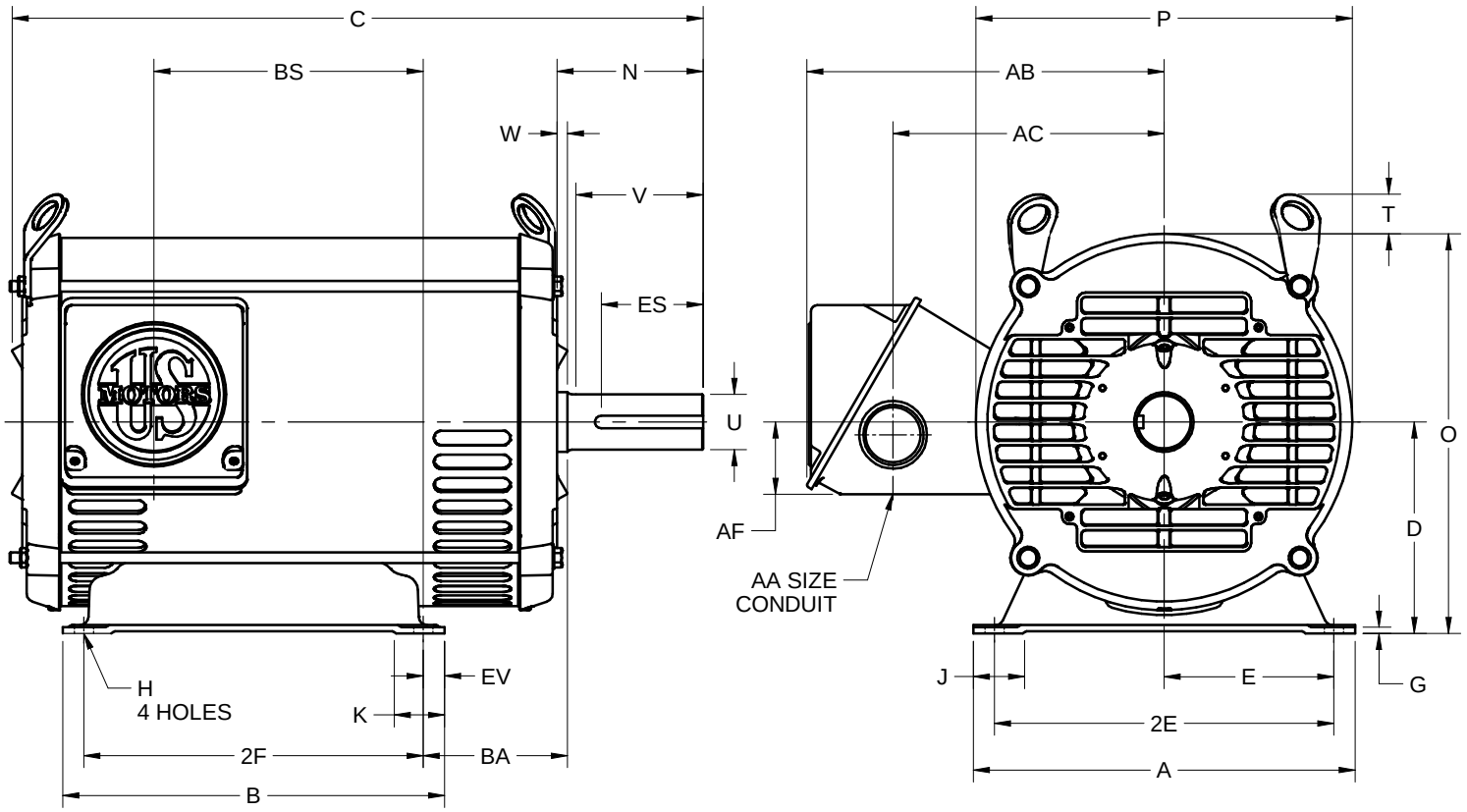

ALL DIMENSIONS ARE IN INCHES AND MILLIMETERS

UNITS		A	D -.06	E	2E ±.03	G	H +.05	J	K	N	O	P [2]	T
	IN	11.25	6.25	5.00	10.00	.19	.53	1.44	1.38	4.31	11.78	11.09	1.16
	MM	286	159	127	254	5	14	37	35	109	299	282	29

UNITS		U -.001	V MIN	W	AA	AB	AC	AF	BA	ES MIN	EV	SQ KEY
	IN	1.625	3.75	.31	1.50	10.53	8.00	2.13	4.25	2.91	.63	.375
	MM	41.28	96	8		267	203	54	108	74	16	9.53

FRAME	UNITS	B	C	2F ±.03	BS
254T	IN	9.50	19.13	8.25	6.69
	MM	241	486	210	170
256T	IN	11.25	20.38	10.00	7.94
	MM	286	518	254	202

1. DIMENSIONS MAY VARY .25" DUE TO CASTING AND/OR FABRICATION VARIATIONS
2. LARGEST MOTOR WIDTH
3. BASIC CONDUIT FITTING SIZE. CONDUIT OPENING ON THE SIDE OF THE CONDUIT BOX WILL ACCEPT 1-1/2 NPT CONDUIT FITTING
4. THE CONDUIT BOX MAY BE LOCATED ON EITHER SIDE OF THE MOTOR. THE CONDUIT OPENINGS(S) MAY BE LOCATED IN STEPS OF 180° REGARDLESS OF LOCATION. STANDARD LOCATION IS SHOWN WITH THE CONDUIT OPENING DOWN
5. TOLERANCES ARE SHOWN IN INCHES ONLY
6. FRAME REFERENCE: 12.625/254//13.875/256

Nidec Motor Corporation
St. Louis, Missouri

INFORMATION DISCLOSED ON THIS DOCUMENT IS CONSIDERED PROPRIETARY AND SHALL NOT BE REPRODUCED OR DISCLOSED WITHOUT WRITTEN CONSENT OF NIDEC MOTOR CORPORATION

ISSUED BY	R. TIMMERMANN
APPROVED BY	M. CULLEN

IHP_DP_NMCA (MAR-2011) SOLIDEDGE