EFFECTIVE:	DIMENSION PRINT	PRINT:
01-AUG-18	OPEN DRIP PROOF CLOSE COUPLED PUMP WITH CANOPY CAP	07-3354
SUPERSEDES:	FRAME: 254, 256JM, JP	SHEET:
NEW	BASIC TYPE: DF4, DF1	1 OF 1

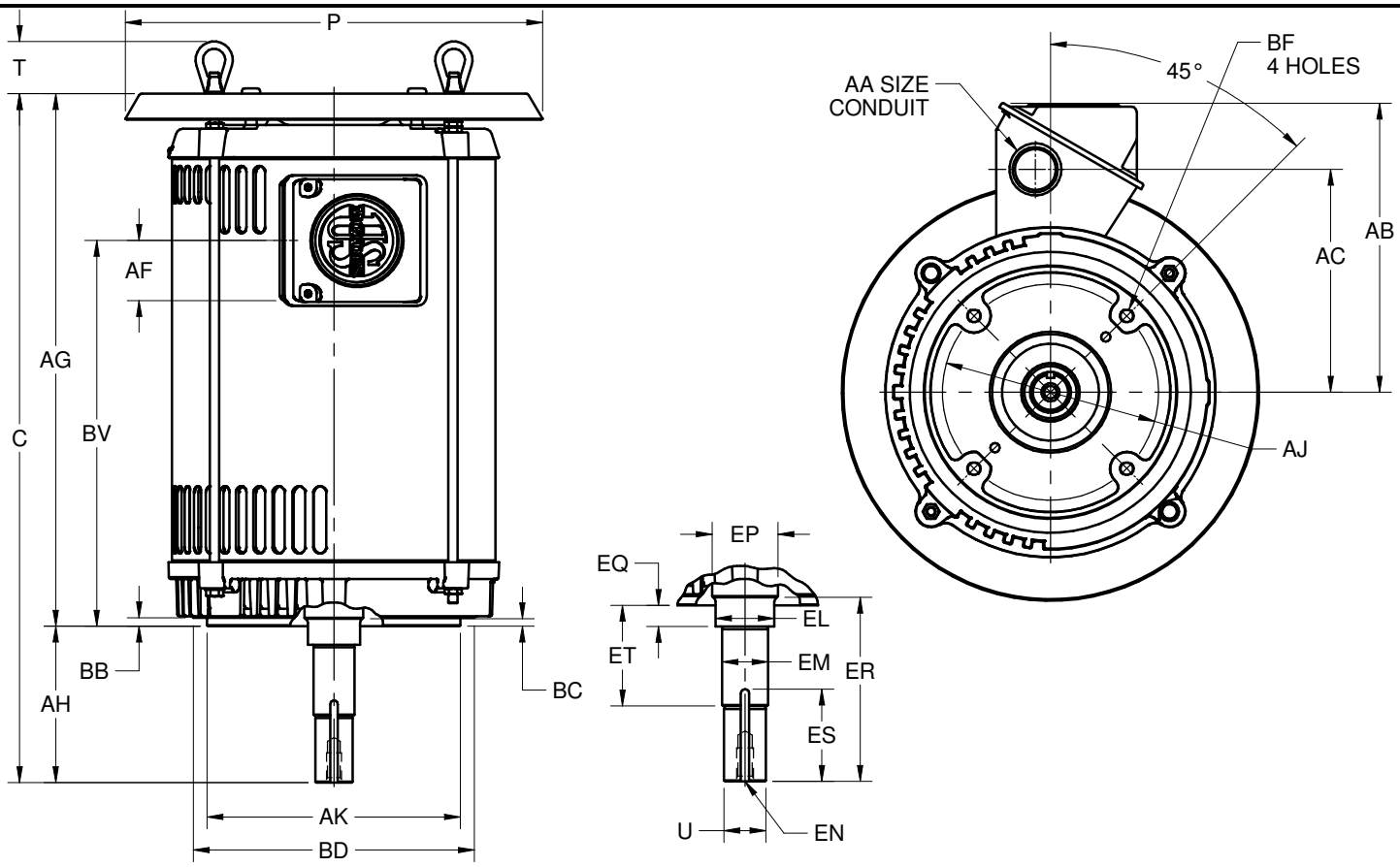

ALL DIMENSIONS ARE IN INCHES AND MILLIMETERS

UNITS	P [2]	T	U -.0005	AA	AB	AC	AF	AJ	AK -.003	BB MIN	BC	BD
IN	14.00	1.75	1.2495	1.25	9.72	7.50	2.03	7.250	8.500	.25	.25	9.00
MM	356	44	31.737		247	191	52	184.15	215.90	6	6	229

UNITS	BF [3,4]	EL -.002	EM -.0005	EN [3,4]	EP MIN	ES MIN	SQ KEY
IN	1/2-13 X .75	1.750	1.3750	1/2-13 X 1.00	1.75	2.53	.250
MM		44.45	34.925		44	64	6.35

FRAME	UNITS	AH ±.031	EQ ±.015	ER MIN	ET ±.015
250JM	IN	5.250	.625	5.25	3.000
	MM	113.35	15.88	113	76.20
250JP	IN	8.125	2.375	8.13	5.875
	MM	206.38	60.33	207	149.23

FRAME	UNITS	C	AG	BV
254JM	IN	21.88	16.63	11.69
	MM	556	422	297
256JM	IN	23.13	17.88	12.94
	MM	588	454	329
254JP	IN	24.75	16.63	11.69
	MM	629	422	297
256JP	IN	26.00	17.88	12.94
	MM	661	454	329

1. DIMENSIONS MAY VARY .25" DUE TO CASTING AND/OR FABRICATION VARIATIONS
2. LARGEST MOTOR WIDTH
3. ALL TAP HOLES ARE UNIFIED NATIONAL COARSE, RIGHT HAND THREAD
4. TAP SIZE AND BOLT PENETRATION ALLOWANCE
5. CONDUIT OPENINGS MAY BE LOCATED IN STEPS OF 180° REGARDLESS OF THE LOCATION. STANDARD AS SHOWN WITH CONDUIT OPENING DOWN
6. TOLERANCES ARE SHOWN IN INCHES ONLY
7. FRAME REFERENCE: 12.625/254//13.875/256

TOLERANCES	
FACE RUNOUT	.004 TIR
PERMISSIBLE ECCENTRICTY OF MOUNTING RABBET	.004 TIR
PERMISSIBLE SHAFT RUNOUT	.002 TIR

07-3354/-

Nidec Motor Corporation
St. Louis, Missouri

INFORMATION DISCLOSED ON THIS DOCUMENT IS CONSIDERED PROPRIETARY AND SHALL NOT BE REPRODUCED OR DISCLOSED WITHOUT WRITTEN CONSENT OF NIDEC MOTOR CORPORATION

ISSUED BY
R. TIMMERMANN
APPROVED BY
M. CULLEN

IHP_DP_NMCA (MAR-2011) SOLIDEDGE