EFFECTIVE: 11-MAY-11	HORIZONTAL MOTORS OPEN DRIPPROOF FRAME: 320TS TYPE: D	PRINT: 07-2200
SUPERSEDES: 17-APR-02		SHEET: 1 OF 1

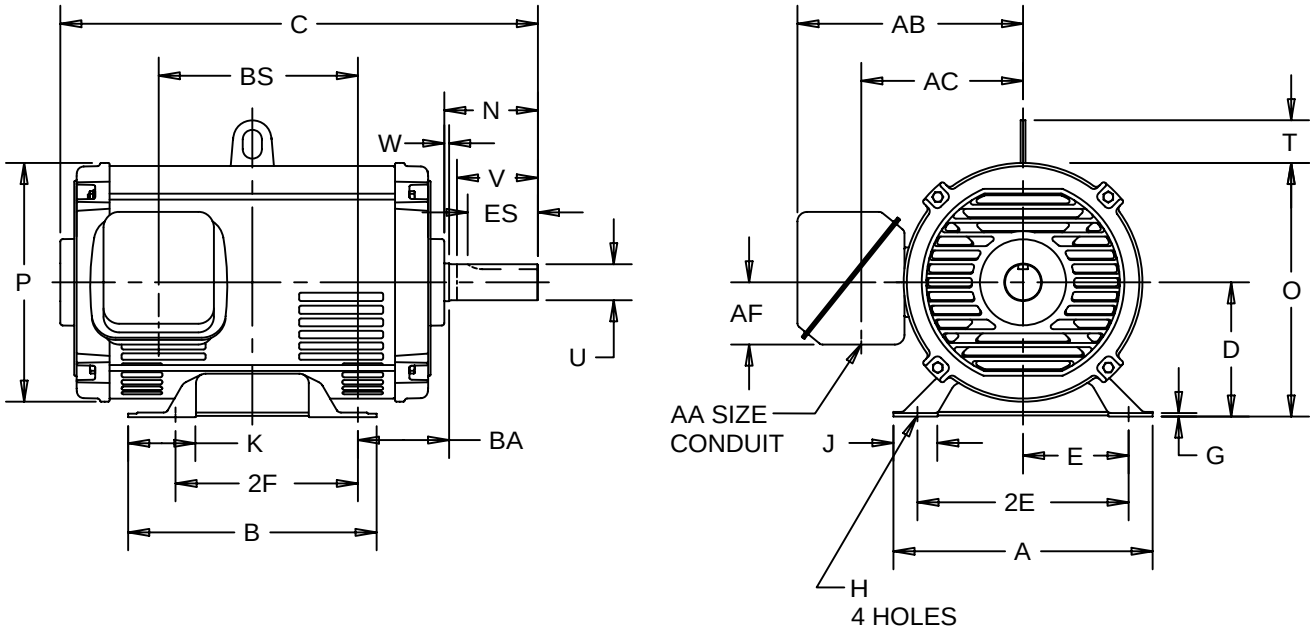

ALL DIMENSIONS ARE IN INCHES AND MILLIMETERS

	UNITS	A	B	C	D -.06	E	2E ±.03	G	H +.05	J	K	N	O	P [2]
	IN	15.00	14.00	25.75	8.00	6.25	12.50	.25	.69	2.31	3.81	4.25	15.13	14.19
	MM	381	356	654	203	159	318	6	18	59	97	108	384	360

	UNITS	T	U -.001	V MIN	W	AA	AB	AC	AF	BA	BS	ES MIN	SQ KEY
	IN	2.19	1.875	3.50	.50	2.00	12.69	9.31	3.25	5.25	11.50	2.03	.500
	MM	56	47.63	89	13	2.00	322	237	83	133	292	52	12.70

	FRAME	UNITS	2F ±.03
	324TS	IN	10.50
		MM	267
	326TS	IN	12.00
		MM	305

1: ALL ROUGH DIMENSIONS MAY VARY BY .25" DUE TO CASTING AND/OR FABRICATION VARIATIONS.
2: LARGEST MOTOR WIDTH.
3: TOLERANCE UNITS ARE IN INCHES ONLY.

4: STANDARD ASSEMBLY POSITION F-1 IS SHOWN. F-2 IS PROVIDED WHEN SPECIFIED. CONDUIT OPENINGS MAY BE LOCATED IN STEPS OF 90° REGARDLESS OF LOCATION. STANDARD AS SHOWN WITH CONDUIT OPENING DOWN.

Nidec Motor Corporation
St. Louis, Missouri

INFORMATION DISCLOSED ON THIS DOCUMENT IS CONSIDERED PROPRIETARY AND SHALL NOT BE REPRODUCED OR DISCLOSED WITHOUT WRITTEN CONSENT OF NIDEC MOTOR CORPORATION

ISSUED BY	R. KING
APPROVED BY	K. POTTER

IHP_DP_NMCA (MAR-2011) SOLIDEDGE