EFFECTIVE: 09-MAR-20	**DIMENSION PRINT** **OPEN DRIP PROOF CLOSE COUPLED PUMP WITH CANOPY CAP** **FRAME: 364, 365JP** **BASIC TYPE: DEF1, FDF1**	PRINT: 07-3438
SUPERSEDES: NEW		SHEET: 1 OF 1

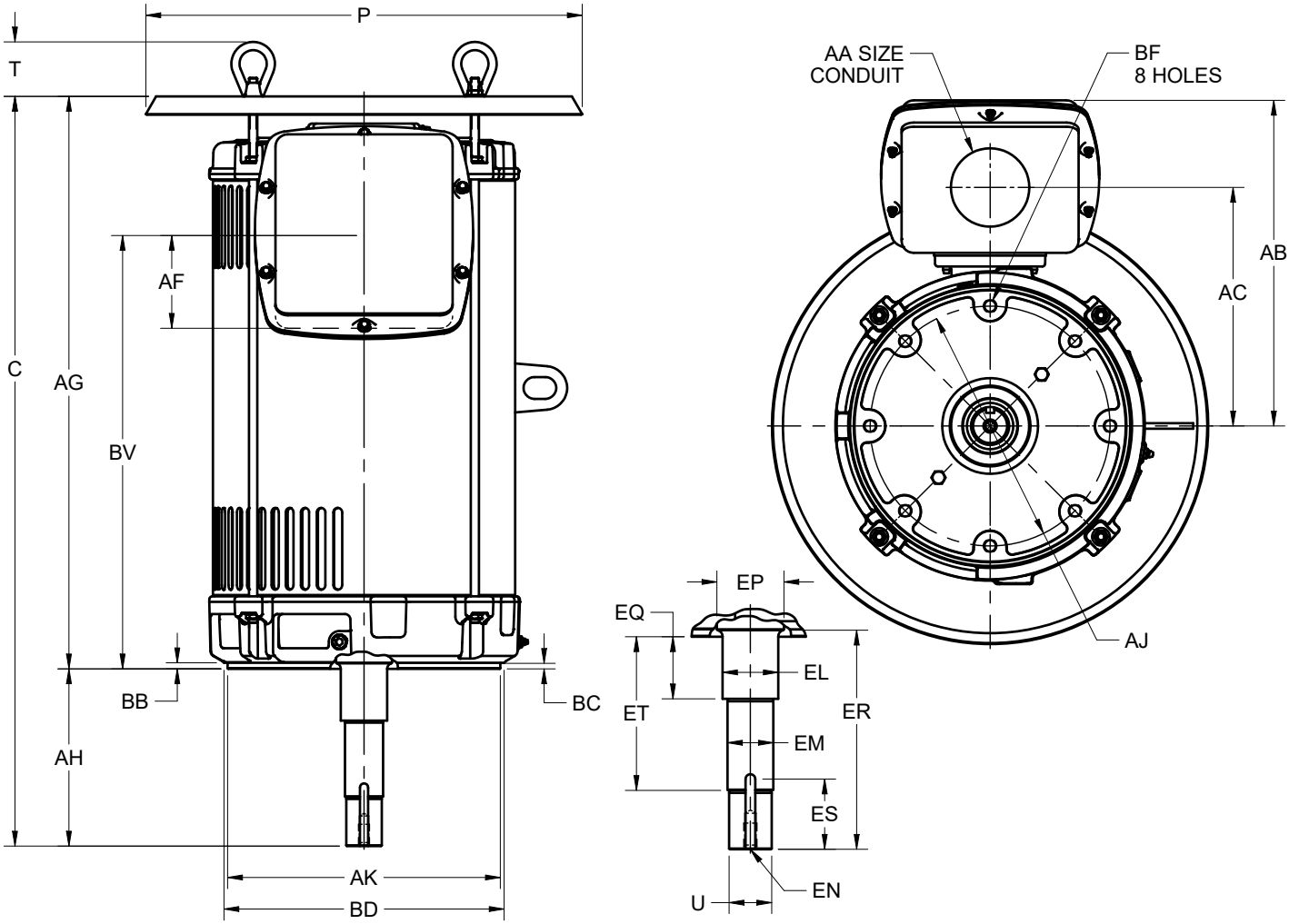

ALL DIMENSIONS ARE IN INCHES AND MILLIMETERS

UNITS		P [2]	T	U -.0005	AA	AB	AC	AF	AH ±.031	AJ	AK -.003	BB MIN	BC	BD
	IN	20.00	2.50	1.6245	3.00	14.94	10.94	4.25	8.125	11.000	12.500	.25	.25	14.00
	MM	508	64	41.262		379	278	108	206.38	279.40	317.50	6	6	356

UNITS		BF [3,4]	EL -.002	EM -.0005	EN [3,4]	EP MIN	EQ ±.015	ER MIN	ET ±.015	ES MIN	SQ KEY
	IN	5/8-11 X .94	2.125	1.7500	1/2-13 X 1.00	2.50	2.375	8.13	5.875	2.53	.375
	MM		53.98	44.450		64	60.33	207	149.23	64	9.53

FRAME	UNITS	C	AG	BV
364JP (2 AND 4 POLE)	IN	32.38	24.25	17.88
	MM	822	616	454
365JP (2, 4 AND 6 POLE)	IN	34.38	26.25	19.88
	MM	873	667	505

TOLERANCES	
FACE RUNOUT	.006 TIR
PERMISSIBLE ECCENTRICTY OF MOUNTING RABBET	.006 TIR
PERMISSIBLE SHAFT RUNOUT	.003 TIR

1. DIMENSIONS MAY VARY .25" DUE TO CASTING AND/OR FABRICATION VARIATIONS
2. LARGEST MOTOR WIDTH
3. ALL TAP HOLES ARE UNIFIED NATIONAL COARSE, RIGHT HAND THREAD
4. TAP SIZE AND BOLT PENETRATION ALLOWANCE
5. CONDUIT OPENINGS MAY BE LOCATED IN STEPS OF 90° REGARDLESS OF THE LOCATION. STANDARD AS SHOWN WITH CONDUIT OPENING DOWN
6. TOLERANCES ARE SHOWN IN INCHES ONLY
7. FRAME REFERENCE: 17.500/364//19.500/365

07-3438/-

Nidec Motor Corporation
St. Louis, Missouri

INFORMATION DISCLOSED ON THIS DOCUMENT IS CONSIDERED PROPRIETARY AND SHALL NOT BE REPRODUCED OR DISCLOSED WITHOUT WRITTEN CONSENT OF NIDEC MOTOR CORPORATION

ISSUED BY
R. TIMMERMANN
APPROVED BY
P. HOGG

IHP_DP_NMCA (MAR-2011) SOLIDEDGE