MODEL	HP	VOLTS	AMPS	ROTATION	DESCRIPTION/REMARKS
B1880441600000B	1/30	115V	1.6A	CCWSE	PALLET QTY 120

BLOWER SPECIFICATIONS			
CAT #	N157	ROTATION	CCWSE
HP	1/30	BEARING TYPE	BALL BEARING
VOLTS	115V	MOTOR TYPE	SHADE POLE
HERTZ	60HZ	PROTECTOR	AUTO
SPEEDS	1	PHASE	SINGLE
AMPS	1.6A	INSULATION CLASS	B
RPM	3000	CFM	94.37@FREE AIR

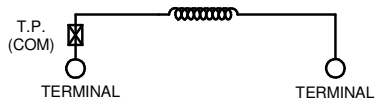

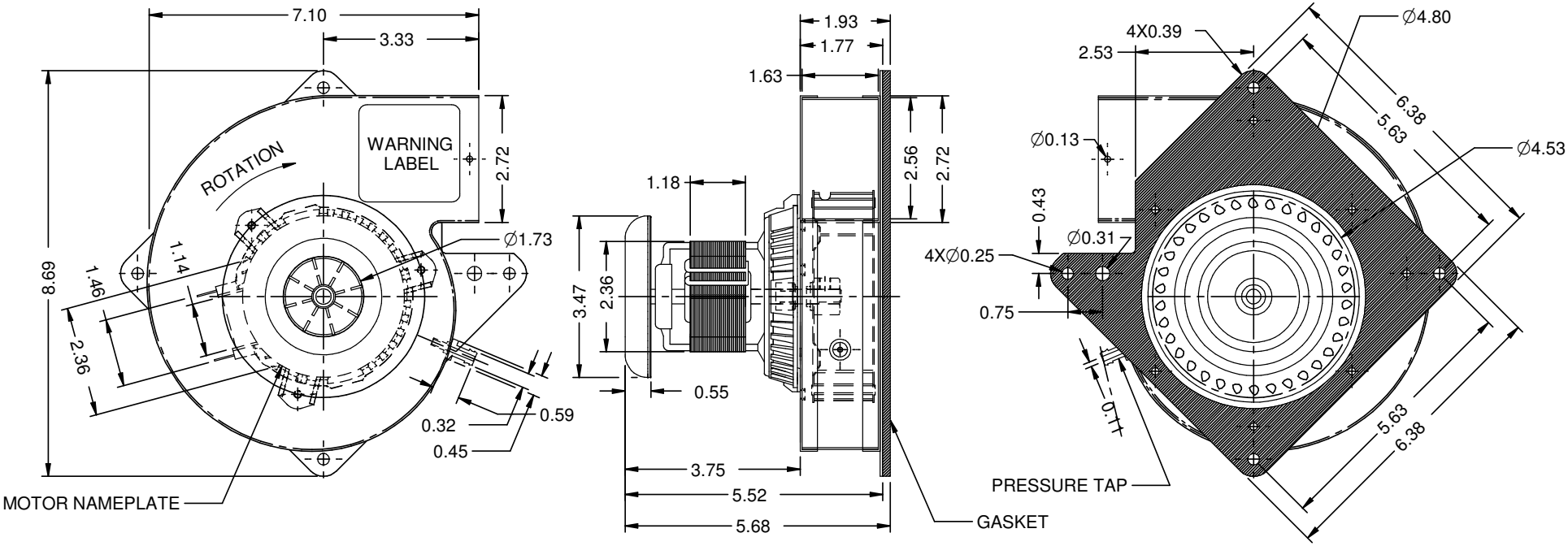

NIDEC MOTOR CORPORATION 08-OCT-15

REVISION RECORD FOR: ECO: E24565

CREATED DRAWING

ISSUED BY : F. GARCIA

ENGINEER APPROVED : T. BOURQUIN

TOLERANCES ON DIMENSIONS (UNLESS OTHERWISE SPECIFIED)

INCHES	mm
.XX = ± .010	
.XXX = ±.005	

ANGLES X°= ±1°

NIDEC MOTOR CORPORATION

INFORMATION DISCLOSED ON THIS DOCUMENT IS CONSIDERED PROPRIETARY AND SHALL NOT BE REPRODUCED OR DISCLOSEDWITHOUT WRITTEN CONSENT OF NIDEC MOTOR CORPORATION

REVISION DATE : 08-OCT-15

TITLE	CODE	ITEM NO.	REV	SHEET NUMBER	DWG SIZE
CUSTOMER DETAIL DRAWING	V02	807914	--	1 OF 2	B

V02_NMCB (MAR-2014)

SOLIDEDGE