EFFECTIVE: 03-AUG-18	**DIMENSION PRINT** **OPEN DRIP PROOF CLOSE-COUPLED PUMP WITH CANOPY CAP** **FRAME: 182, 184JM, JP** **BASIC TYPE: DF4, DF1**	PRINT: 07-3244
SUPERSEDES: 20-JUN-16		SHEET: 1 OF 1

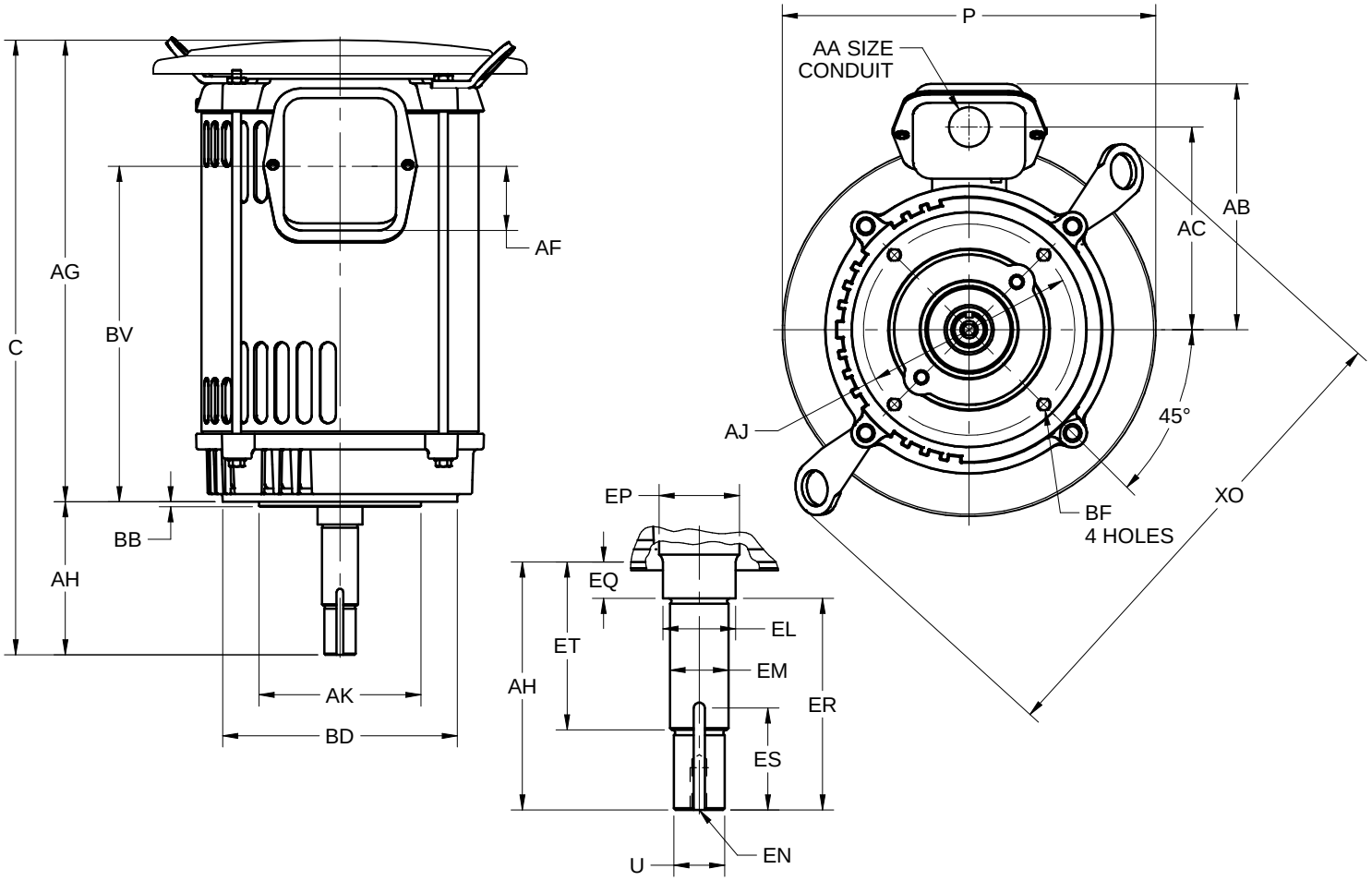

ALL DIMENSIONS ARE IN INCHES AND MILLIMETERS

UNITS		P [2]	U -.0005	AA	AB	AC	AF	AG	AJ	AK -.003	BB -.031	BD MAX
	IN	10.38	.8745	.75	6.88	5.63	2.13	12.84	5.875	4.500	.156	6.50
	MM	264	22.212		175	143	54	326	149.23	114.30	3.96	165

UNITS		BF [3,4]	BV	EL -.002	EM -.0005	EN [3,4]	EP MIN	ES MIN	XO	SQ KEY
	IN	3/8-16 X .56	9.59	1.250	1.0000	3/8-16 X .75	1.25	1.66	13.56	.188
	MM		244	31.75	25.400		32	42	344	4.78

FRAME	UNITS	C	AH ±.031	EQ ±.015	ER MIN	ET ±.015
180JM	IN	17.09	4.250	.625	4.25	2.875
	MM	434	107.95	15.88	108	73.03
180JP	IN	20.16	7.313	1.563	7.31	5.938
	MM	512	185.75	39.70	186	150.83

1. DIMENSIONS MAY VARY .25" DUE TO CASTING AND/OR FABRICATION VARIATIONS
2. LARGEST MOTOR WIDTH
3. ALL TAP HOLES ARE UNIFIED NATIONAL COARSE, RIGHT HAND THREAD
4. TAP SIZE AND BOLT PENETRATION ALLOWANCE
5. CONDUIT OPENINGS MAY BE LOCATED IN STEPS OF 90° REGARDLESS OF THE LOCATION. STANDARD AS SHOWN WITH CONDUIT OPENING DOWN
6. TOLERANCES ARE SHOWN IN INCHES ONLY
7. FRAME REFERENCE: 9.250/182/184

TOLERANCES	
FACE RUNOUT	.004 TIR
PERMISSIBLE ECCENTRICTY OF MOUNTING RABBET	.004 TIR
PERMISSIBLE SHAFT RUNOUT	.002 TIR

07-3244/B

Nidec Motor Corporation
St. Louis, Missouri

INFORMATION DISCLOSED ON THIS DOCUMENT IS CONSIDERED PROPRIETARY AND SHALL NOT BE REPRODUCED OR DISCLOSED WITHOUT WRITTEN CONSENT OF NIDEC MOTOR CORPORATION

ISSUED BY
R. TIMMERMANN
APPROVED BY
M. CULLEN

IHP_DP_NMCA (MAR-2011) SOLIDEDGE