| EFFECTIVE: 11-MAY-11 | HORIZONTAL MOTORS<br>CLOSE COUPLED PUMP-VERTICAL MOUNTING<br>FRAME: 280JPV<br>BASIC TYPE: D | PRINT: 07-2193 |
|---|---|---|
| SUPERSEDES: 11-FEB-00 | | SHEET: 1 OF 1 |

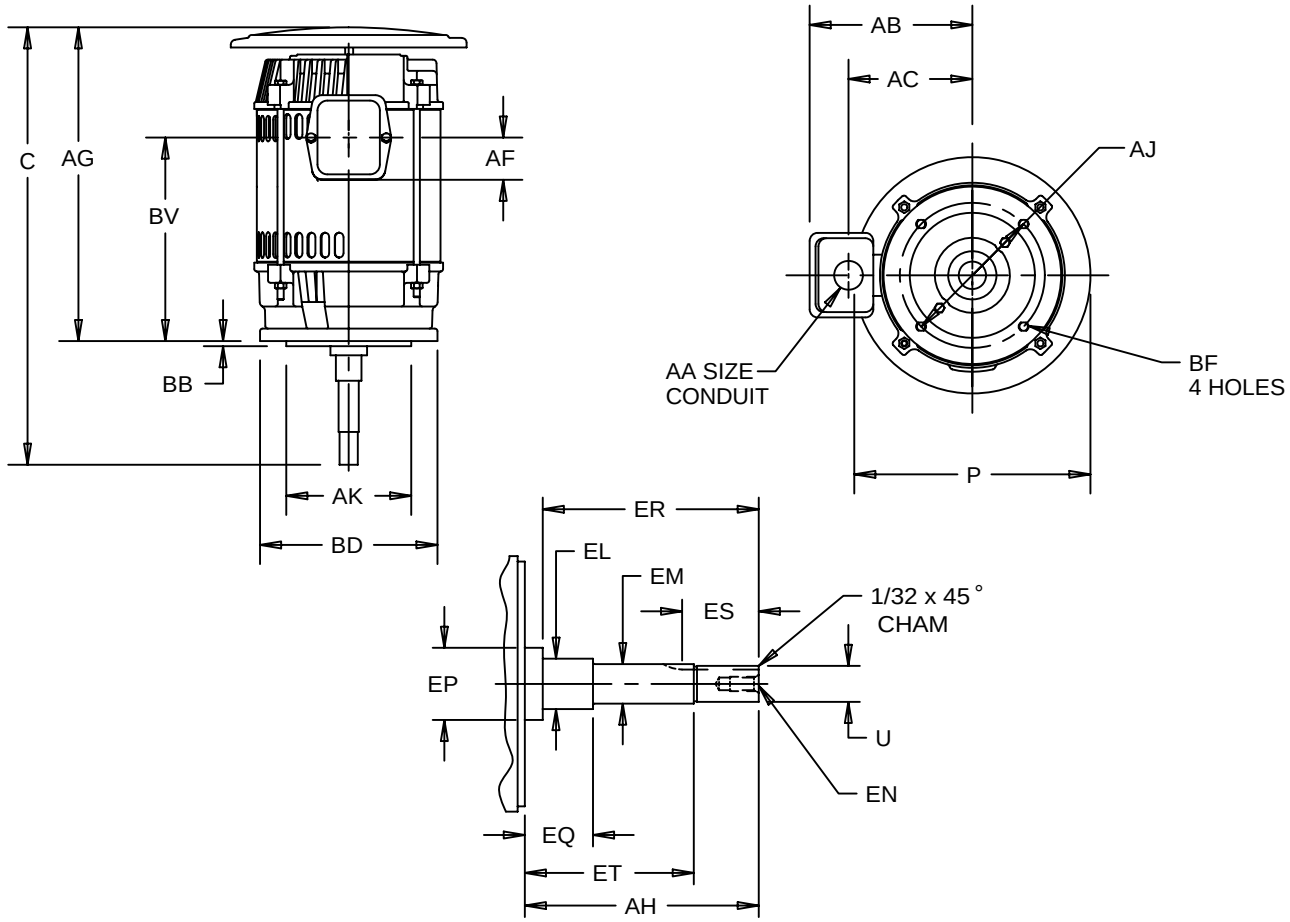


ALL DIMENSIONS ARE IN INCHES AND MILLIMETERS

| | UNITS | C | P [5] | U -.0005 | AA | AB | AC | AF | AG | AH | AJ | AK -.005 |
|---|---|---|---|---|---|---|---|---|---|---|---|---|
| | INCH | 29.00 | 12.44 | 1.2495 | 2.00 NPT | 11.75 | 8.44 | 3.75 | 21.88 | 8.13 | 11.00 | 12.500 |
| | MM | 737 | 316 | 31.737 | 2.00 NPT | 298 | 214 | 95 | 556 | 206 | 279 | 317.50 |

| | UNITS | BB -.062 | BD MAX | BF [2,3] | BV | EL -.002 | EM -.0005 | EN [2,3] | EP MIN |
|---|---|---|---|---|---|---|---|---|---|
| | INCH | .313 | 14.00 | 5/8-11 UNC x .94 | 15.13 | 1.750 | 1.3750 | 1/2-13 UNC x 1.00 | 2.13 |
| | MM | 7.95 | 356 | 5/8-11 UNC x .94 | 384 | 44.45 | 34.925 | 1/2-13 UNC x 1.00 | 54 |

| | UNITS | EQ ±.015 | ER MIN | ES MIN | ET ±.020 | SQ KEY |
|---|---|---|---|---|---|---|
| | INCH | 2.375 | 8.13 | 2.53 | 5.875 | .250 |
| | MM | 60.33 | 206 | 64 | 876.70 | 6.35 |

1: ALL ROUGH DIMENSIONS MAY VARY BY .25" DUE TO CASTING AND/OR FABRICATION VARIATIONS.
2: TAP SIZE AND BOLT PENETRATION ALLOWANCE.
3: ALL TAPPED HOLES ARE UNIFIED NATIONAL COARSE, RIGHT HAND THREAD.
4: STANDARD ASSEMBLY POSITION F-1 IS SHOWN. F-2 IS PROVIDED WHEN SPECIFIED. CONDUIT OPENINGS MAY BE LOCATED IN STEPS OF 90° REGARDLESS OF LOCATION. STANDARD AS SHOWN WITH CONDUIT OPENING DOWN.
5: LARGEST MOTOR WIDTH.
6: TOLERANCE UNITS ARE IN INCHES ONLY.



**Nidec Motor Corporation**
**St. Louis, Missouri**

INFORMATION DISCLOSED ON THIS DOCUMENT IS CONSIDERED PROPRIETARY AND SHALL NOT BE REPRODUCED OR DISCLOSED WITHOUT WRITTEN CONSENT OF NIDEC MOTOR CORPORATION

| ISSUED BY | R. KING |
|---|---|
| APPROVED BY | K. POTTER |

IHP_DP_NMCA (MAR-2011) SOLIDEDGE