EFFECTIVE: 03-MAY-21	**DIMENSION PRINT** **OPEN DRIP PROOF** **FRAME: 284, 286TS** **BASIC TYPE: D**	PRINT: 07-3481
SUPERSEDES: NEW		SHEET: 1 OF 1

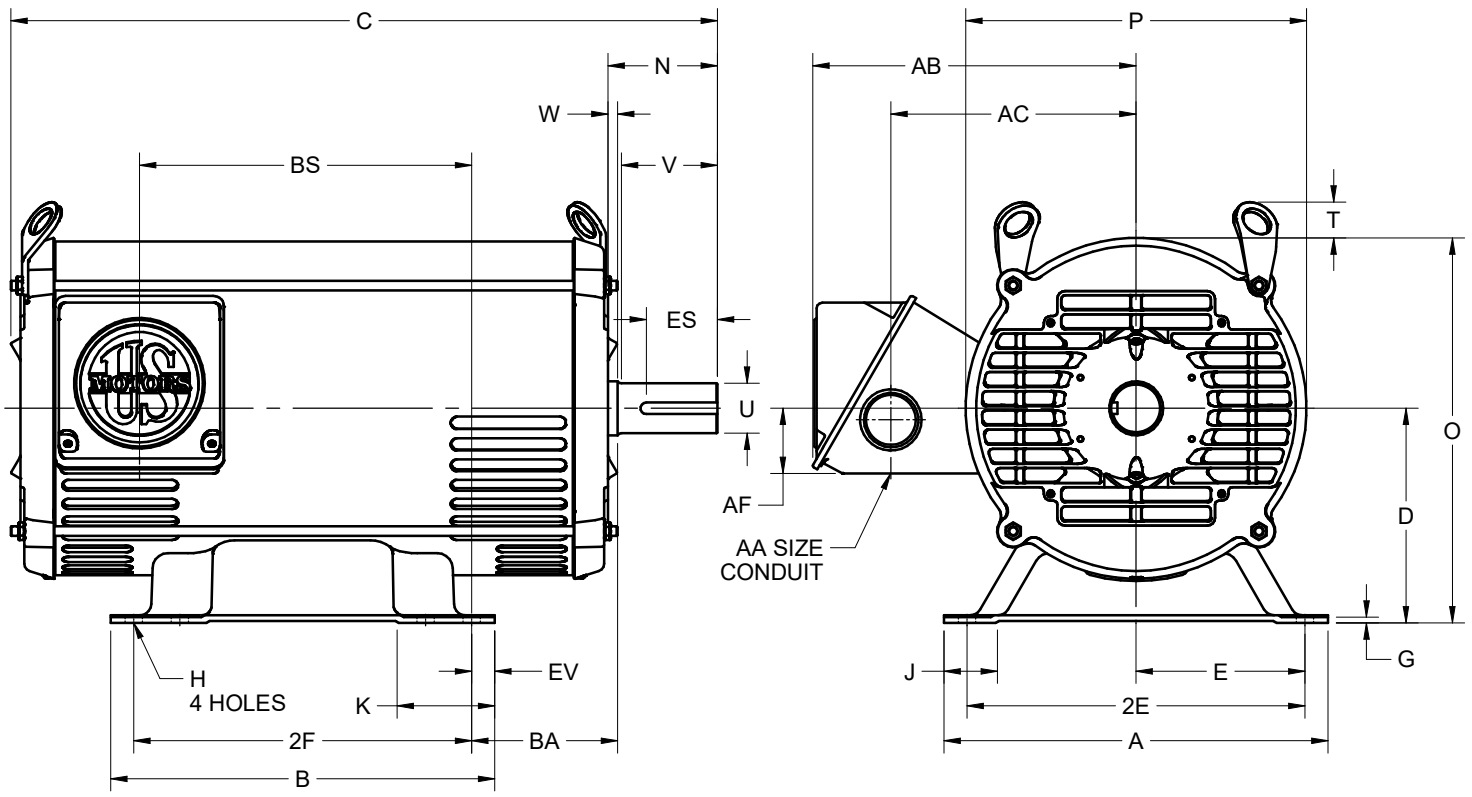

ALL DIMENSIONS ARE IN INCHES AND MILLIMETERS

UNITS	A	B	C	D -.06	E	2E ±.03	G	H +.05	J	K	N	O	P [2]
IN	12.50	12.50	23.00	7.00	5.50	11.00	.19	.53	1.72	3.16	3.56	12.53	11.09
MM	318	318	584	178	140	280	5	14	44	80	90	318	282

UNITS	T	U -.001	V MIN	W	AA	AB	AC	AF	BA	BS	ES MIN	EV	SQ KEY
IN	1.16	1.625	3.00	.31	1-1/2 NPT	10.53	8.00	2.13	4.75	10.81	1.91	.75	.375
MM	29	41.28	76	8		267	203	54	121	275	49	19	9.53

FRAME	UNITS	2F ±.03
284TS	IN	9.50
	MM	241
286TS	IN	11.00
	MM	279

1. DIMENSIONS MAY VARY .25" DUE TO CASTING AND/OR FABRICATION VARIATIONS
2. LARGEST MOTOR WIDTH
3. BASIC CONDUIT FITTING SIZE. CONDUIT OPENING ON THE SIDE OF THE CONDUIT BOX WILL ACCEPT 1-1/2 NPT CONDUIT FITTING
4. THE CONDUIT BOX MAY BE LOCATED ON EITHER SIDE OF THE MOTOR. THE CONDUIT OPENINGS(S) MAY BE LOCATED IN STEPS OF 180° REGARDLESS OF LOCATION. STANDARD LOCATION IS SHOWN WITH THE CONDUIT OPENING DOWN
5. TOLERANCES ARE SHOWN IN INCHES ONLY
6. FRAME REFERENCE: 284/286//17.25

07-3481/-

Nidec Motor Corporation
St. Louis, Missouri

INFORMATION DISCLOSED ON THIS DOCUMENT IS CONSIDERED PROPRIETARY AND SHALL NOT BE REPRODUCED OR DISCLOSED WITHOUT WRITTEN CONSENT OF NIDEC MOTOR CORPORATION

ISSUED BY
R. TIMMERMANN
APPROVED BY
E. O'HARA

IHP_DP_NMCA (MAR-2011) SOLIDEDGE