EFFECTIVE: 13-JAN-23	DIMENSION PRINT OPEN DRIP PROOF-WITH WORLD MOTOR O/B FRAME: 444, 445TS AND 444, 445T BASIC TYPE: R	PRINT: 07-3556
SUPERSEDES: NEW		SHEET: 1 OF 1

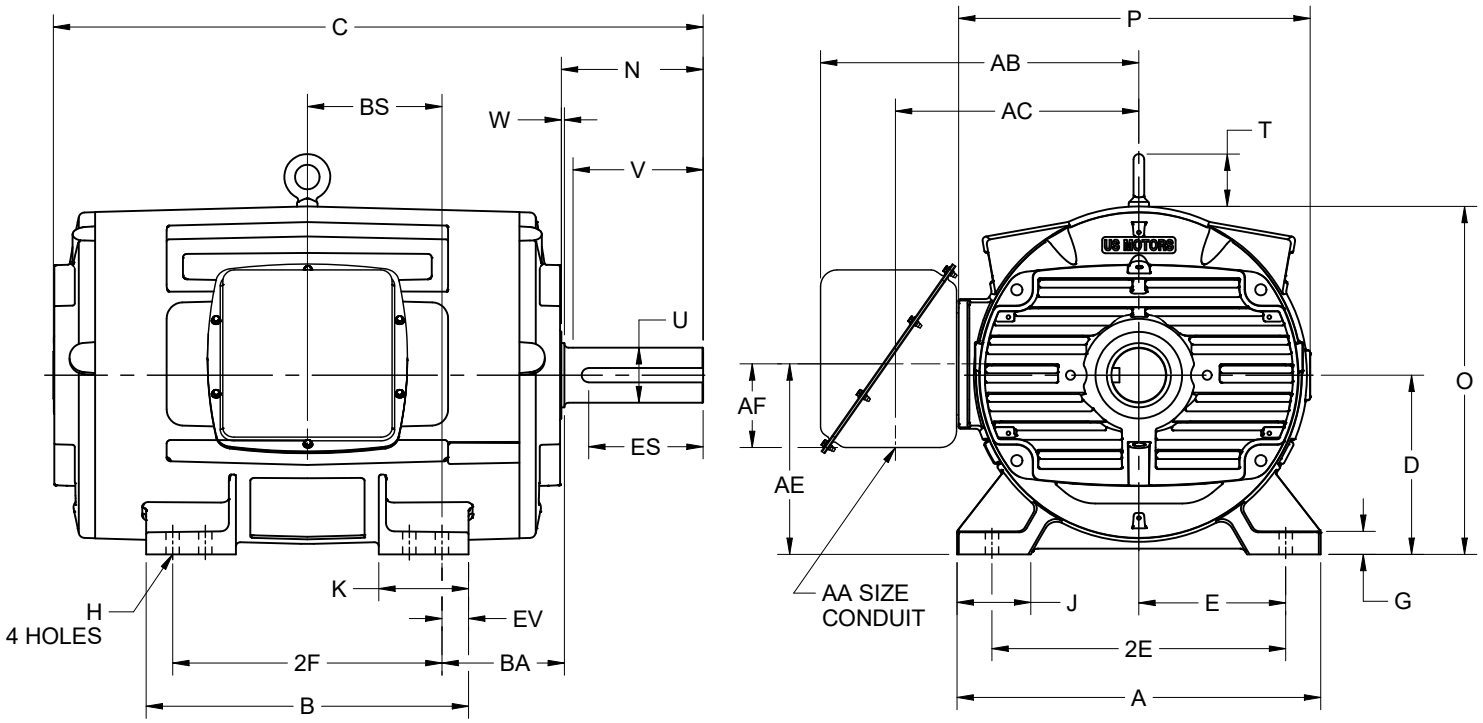

ALL DIMENSIONS ARE IN INCHES AND MILLIMETERS

UNITS	A	B	D -.06	E	2E ±.03	G	H +.05	J	K	O	P [2]	T
IN	22.28	19.75	11.00	9.00	18.00	1.38	.81	4.50	5.50	21.34	21.56	3.25
MM	566	502	279	229	457	35	21	114	140	542	548	83

UNITS	W	AA	AB	AC	AE	AF	BA	BS	EV
IN	.19	3.00	19.52	14.94	11.69	5.13	7.50	8.25	1.63
MM	5		496	379	297	130	191	210	41

FRAME	UNITS	C	N	2F ±.03	U -.001	V MIN	ES MIN	SQ KEY
444TS	IN	36.06	4.94	14.50	2.375	4.50	3.03	.625
	MM	916	125	368	60.33	114	77	15.88
444T	IN	39.81	8.69	14.50	3.375	8.25	6.91	.875
	MM	1011	221	368	85.73	210	176	22.23
445TS	IN	36.06	4.94	16.50	2.375	4.50	3.03	.625
	MM	916	125	419	60.33	114	77	15.88
445T	IN	39.81	8.69	16.50	3.375	8.25	6.91	.875
	MM	1011	221	419	85.73	210	176	22.23

1. DIMENSIONS MAY VARY .25" DUE TO CASTING AND/OR FABRICATION VARIATIONS.
2. LARGEST MOTOR WIDTH.
3. STANDARD ASSEMBLY POSITION F-1 IS SHOWN. F-2 IS PROVIDED WHEN SPECIFIED. CONDUIT OPENING MAY BE LOCATED IN STEPS OF 90 DEGREES REGARDLESS OF THE LOCATION.
4. TOLERANCES ARE SHOWN IN INCHES ONLY.
5. MOTOR HAS "DUAL" H MOUNTING HOLES (TOTAL 8 HOLES).

07-3557/-

Nidec Motor Corporation
St. Louis, Missouri

INFORMATION DISCLOSED ON THIS DOCUMENT IS CONSIDERED PROPRIETARY AND SHALL NOT BE REPRODUCED OR DISCLOSED WITHOUT WRITTEN CONSENT OF NIDEC MOTOR CORPORATION

ISSUED BY
D. CISNEROS
APPROVED BY
E. OVIEDO

IHP_DP_NMCA (MAR-2011) SOLIDEDGE