EFFECTIVE: 10-MAY-11	HORIZONTAL MOTORS OPEN DRIP PROOF FRAME: 250T BASIC TYPE: D	PRINT: 07-2202
SUPERSEDES: 23-MAR-11		SHEET: 1 OF 1

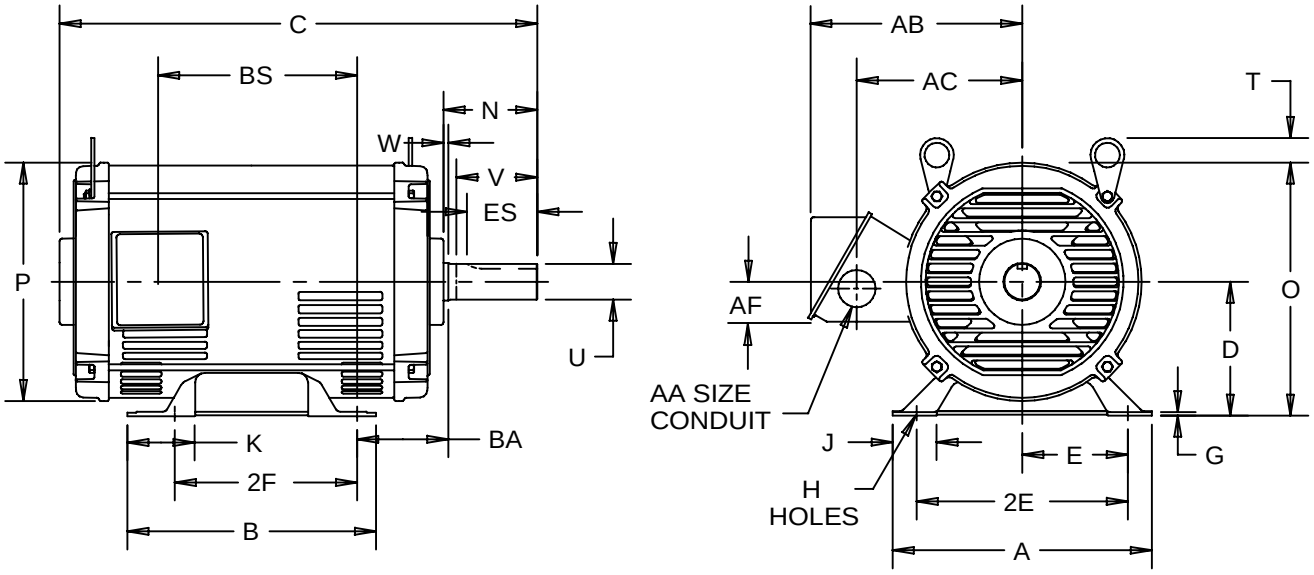

ALL DIMENSIONS ARE IN INCHES AND MILLIMETERS

	UNITS	A	E	G	J	K	N	O	P [2]
	IN	11.25	5.00	.19	1.44	1.38	4.44	11.75	11.10
	MM	286	127	5	37	35	113	298	282

	UNITS	T	V MIN	W	AA	AB	AC	AF	BA	ES MIN	SQ KEY
	IN	2.06	3.75	.44	1.25 NPT	9.75	7.44	1.81	4.25	2.91	.38
	MM	52	95	11	1.25 NPT	248	189	46	108	74	10

	UNITS	D [3] -.06	2E [3] ±.03	H [3] +.05	U [3] -.001
	IN	6.25	10.00	.53	1.625
	MM	158.8	254.0	13.5	41.28

	FRAME	UNITS	B	C	BS	2F [3] ±.03
	254T	IN	9.50	22.56	7.63	8.25
		MM	241	573	194	209.6
	256T	IN	11.25	23.19	8.25	10.00
		MM	286	589	210	254.0

1: ALL ROUGH DIMENSIONS MAY VARY BY .25" DUE TO CASTING AND/OR FABRICATION VARIATIONS.
2: LARGEST MOTOR WIDTH.
3: TOLERANCE UNITS ARE IN INCHES ONLY.
4: STANDARD ASSEMBLY POSITION F-1 IS SHOWN. F-2 IS PROVIDED WHEN SPECIFIED. CONDUIT OPENINGS MAY BE LOCATED IN STEPS OF 90° REGARDLESS OF LOCATION. STANDARD AS SHOWN WITH CONDUIT OPENING DOWN.
5: FRAME REFERENCE: 11.125/254 AND 11.750/256

Nidec Motor Corporation
St. Louis, Missouri

INFORMATION DISCLOSED ON THIS DOCUMENT IS CONSIDERED PROPRIETARY AND SHALL NOT BE REPRODUCED OR DISCLOSED WITHOUT WRITTEN CONSENT OF NIDEC MOTOR CORPORATION

ISSUED BY	L. CUESTA
APPROVED BY	J. MAGALLANES

IHP_DP_NMCA (MAR-2011) SOLIDEDGE