EFFECTIVE: 18-JULY-23	HORIZONTAL MOTORS WITH OVERSIZED WM OUTLET BOX FRAME: 404T, 405TS BASIC TYPE: R	PRINT: 07-3639
SUPERSEDES: NEW		SHEET: 1 OF 1

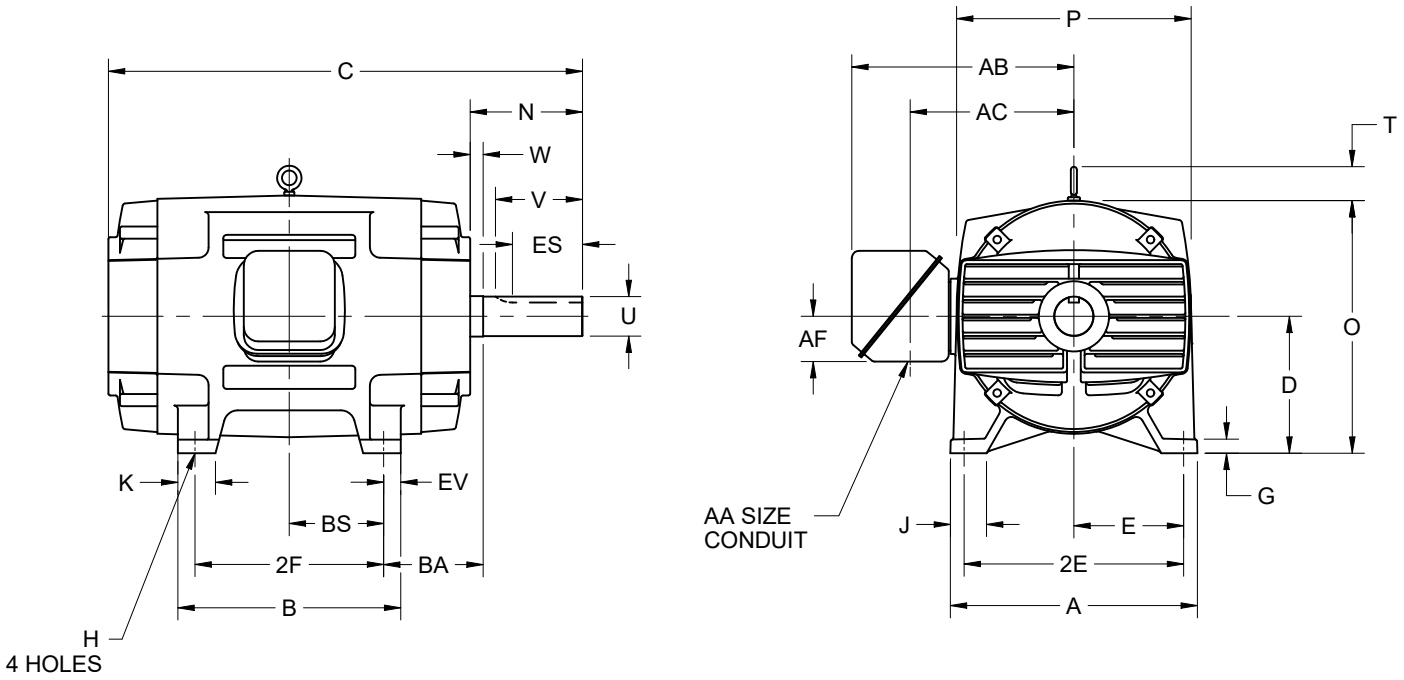

ALL DIMENSIONS ARE IN INCHES AND MILLIMETERS

	UNITS	A	D -.06	E	2E ±.03	G	H +.05	J	K	O	P [2]	T	W
	IN	18.00	10.00	8.00	16.00	1.00	.81	2.63	2.75	18.81	17.63	2.50	.25
	MM	457	254	203	406	25	21	67	70	478	448	64	6

	UNITS	AA	AB	AC	AF	BA	EV
	IN	3.00	18.19	13.66	5.13	6.63	1.25
	MM		462	347	130	168	32

	FRAME	UNITS	B	C	2F ±.03	N	U -.001	V MIN	BS	ES MIN	SQ KEY
	404T	IN	14.75	32.50	12.25	7.50	2.875	7.00	6.13	5.65	.750
		MM	375	826	311	191	73.03	178	156	144	19.05
	404TS	IN	14.75	29.50	12.25	4.50	2.125	4.00	6.13	2.78	.500
		MM	375	749	311	114	53.98	102	156	71	12.70
	405T	IN	16.25	34.00	13.75	7.50	2.875	7.00	6.88	5.65	.750
		MM	413	863	349	191	73.03	178	175	144	19.05
	405TS	IN	16.25	31.00	13.75	4.50	2.125	4.00	6.88	2.78	.500
		MM	413	787	349	114	53.98	102	175	71	12.70

1. ALL ROUGH DIMENSIONS MAY VARY BY .25" DUE TO CASTING AND/OR FABRICATION VARIATIONS.
2. LARGEST MOTOR WIDTH.
3. CONDUIT BOX CAN BE LOCATED ON EITHER SIDE AND OPENING MAY BE LOCATED IN STEPS OF 90 DEGREES REGARDLESS OF LOCATION. STANDARD AS SHOWN WITH CONDUIT DOWN.
4. TOLERANCES SHOWN ARE IN INCHES ONLY.

Nidec Motor Corporation
St. Louis, Missouri

INFORMATION DISCLOSED ON THIS DOCUMENT IS CONSIDERED PROPRIETARY AND SHALL NOT BE REPRODUCED OR DISCLOSED WITHOUT WRITTEN CONSENT OF NIDEC MOTOR CORPORATION

ISSUED BY	D. CORTES
APPROVED BY	E. OVIEDO

IHP_DP_NMCA (MAR-2011) SOLIDEDGE