STL360HW/L



Color: White

Weight: 4.0 lbs

Project:	**Type:**
Prepared By:	**Date:**

Driver Info

Type	Constant Current
120V	N/A
208V	N/A
240V	N/A
277V	N/A
Input Watts	38W

LED Info

Watts	38W
Color Temp	3000K/4000K/5000K
Color Accuracy	90 CRI
L70 Lifespan	15,000 Hours
Lumens	3,600 lm
Efficacy	95

Technical Specifications

Compliance

UL Listed:
Suitable for wet locations

Electrical

Voltage:
120V AC 60Hz

Power Consumption:
1W

Surge Protection:
Withstands up to 6000 volts

Switching Capacity:
120W Electronic Ballast (LED) @ 120 Volts

Wall Switch Manual Override:
Two flip logic prevents activation by momentary power outages. Stays on for 6 hours. No extra wiring needed.

Construction

Temperature Compensation:
Sensitivity adjusts automatically for consistent detection in hot and cold ambient temperatures

Horizontal Lock, No-tool Joints:
Keeps sensing pattern level for fast, error-free installation

Floodlights:
Precision die cast aluminum. 1/2" NPS threaded arm with serrated locking swivel fits all standard mounting boxes and covers.

Lamps Supplied:
Two (2) Edison base PAR38 lamps with three field-selectable color temperatures (3000/4000/5000K).

LED Characteristics

LED Detection Indicator:
Shows when sensor is detecting in daytime and glows red at night for "on-guard" deterrence

Sensor Specifications

Advanced Detection Logic:
Minimizes false triggers

RF Immunity:
Circuits fully shielded for maximum radio frequency immunity

Auto Test Logic:
5 minutes of test time when powered. Resets to auto mode without adjustment.

Time Adjustment:
5 seconds to 12 minutes

Photoelectric Control:
Deactivates lights during daylight. Fully adjustable for 24 hour operation or custom applications.

Detection:
Senses 180° and 360° down for Total Detection

Wide Sensitivity Control:
Adjustable from 100% to 30%

Adjustable Detection Zone:
Customize the protection pattern with included snap-on blinders (if required)

Other

10 Yr Limited Warranty:
The RAB 10-year, limited warranty covers light output, driver performance and paint finish. RAB's warranty is subject to all terms and conditions found at rablighting.com/warranty.

Lamp Warranty:
RAB warrants that our LED products will be free from defects in materials and workmanship for a period of three (3) years from the date of delivery to the end user, including coverage of light output, color stability, driver performance and fixture finish. RAB's warranty is subject to all terms and conditions found at rablighting.com/warranty.

Copyright © 2024 RAB Lighting All Rights Reserved Note: Specifications are subject to change at any time without notice

Technical Specifications (continued)

Buy American Act Compliance:
RAB values USA manufacturing! Upon request, RAB may be able to manufacture this product to be compliant with the Buy American Act (BAA). Please contact customer service to request a quote for the product to be made BAA compliant.

Dimensions

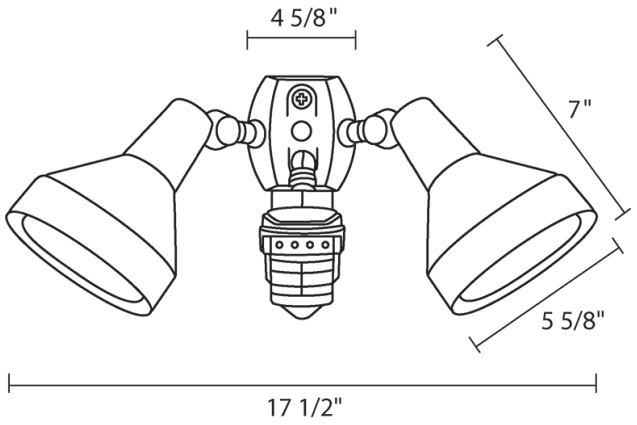

Features

- Two CCT-Selectable PAR38s
- Senses 180° out + 360° down for total detection
- EZ Plate Universal Cover fits all outdoor boxes
- Protected Manual Override

Ordering Matrix

Family	Detection	Flood Type	Finish	Lamps/Wattages/CCT
STL	360	H	W	/L
	360 = 180° & 360° Down for Total Detection **110 =** 110° View **200 =** 200° View	**H =** Bell Hoods **HB =** Bullet Hoods	**Blank =** Bronze **W =** White	**/L =** 2-Edison Base PAR38 Lamps, 38W, Adjustable CCT: 3000/4000/5000K

Copyright © 2024 RAB Lighting All Rights Reserved Note: Specifications are subject to change at any time without notice