X34XLT



Color: Bronze

Weight: 7.4 lbs

Project:	Type:
Prepared By:	Date:

Driver Info

Type	Constant Current
120V	1.13A/0.98A/0.85A
208V	0.63A/0.53A/0.46A
240V	0.55A/0.46A/0.40A
277V	0.49A/0.43A/0.38A
Input Watts	97.3-135.1W

LED Info

Watts	130/110/95W
Color Temp	3000K/4000K/5000K
Color Accuracy	83-85 CRI
L70 Lifespan	100,000 Hours
Lumens	14,615-20,065 lm
Efficacy	135.3-162.5 lm/W

Technical Specifications

Field Adjustability

Field Adjustable:
Field Adjustable Light Output:
130W/110W/95W (factory default 130W)
Color temperature selectable 3000K, 4000K and 5000K (factory default 4000K)

Compliance

UL Listed:
Suitable for wet locations

IESNA LM-79 & LM-80 Testing:
RAB LED luminaires and LED components have been tested by an independent laboratory in accordance with IESNA LM-79 and LM-80.

IP Rating:
Ingress protection rating of IP65 for dust and water

Trade Agreements Act Compliant:
This product is a product of Cambodia and a "designated country" end product that complies with the Trade Agreements Act

DLC Listed:
This product is listed by Design Lights Consortium (DLC) as an ultra-efficient premium product that qualifies for the highest tier of rebates from DLC Member Utilities. Designed to meet DLC 5.1 requirements.
DLC Product Code: S-2HQ7D4

Electrical

Driver:
Constant Current, Class 1, 120-277V, 50/60 Hz
130W: 120V: 1.13A 208V: 0.63A, 240V: 0.55A, 277V: 0.49A
110W: 120V: 0.98A 208V: 0.53A, 240V: 0.46A, 277V: 0.43A
95W: 120V: 0.85A 208V: 0.46A, 240V: 0.40A, 277V: 0.38A

Dimming Driver:
Driver includes dimming control wiring for 0-10V dimming systems. Requires separate 0-10V DC dimming circuit. Dims down to 10%.

THD:
130W: 4.1% at 120V, 7.2% at 277V
110W: 4.1% at 120V, 7.9% at 277V
95W: 4.0% at 120V, 8.8% at 277V

Power Factor:
130W: 99.8% at 120V, 96% at 277V
110W: 99.8% at 120V, 95.1% at 277V
95W: 99.7% at 120V, 93.9% at 277V

Photocell:
Integrated photocell included with on/off switch

Optical

NEMA Type:
NEMA Beam Spread of 7H x 7V

LED Characteristics

LEDs:
Long-life, high-efficacy, surface-mount LEDs

Color Uniformity:
RAB's range of Correlated Color Temperature follows the guidelines of the American National Standard for Specifications for the Chromaticity of Solid State Lighting (SSL) Products, ANSI C78.377-2017.

Performance

Lifespan:
100,000-Hour LED lifespan based on IES LM-80 results and TM-21 calculations

Wattage Equivalency:
130W: Replaces up to 750W Metal Halide (MH) or 400W High Pressure Sodium (HPS)
110W: Replaces up to 400W Metal Halide (MH) or 400W High Pressure Sodium (HPS)
95W: Replaces up to 400W Metal Halide (MH) or 310W High Pressure Sodium (HPS)

Construction

Cold Weather Starting:
The minimum starting temperature is -40°C (-40°F)

Maximum Ambient Temperature:
Suitable for use in up to 40°C (104°F)

Copyright © 2024 RAB Lighting All Rights Reserved Note: Specifications are subject to change at any time without notice

Technical Specifications (continued)

Housing:
Die-cast aluminum

Mounting:
Trunnion with tilt angle in 30° increments

Tilt Increment:
-90° to +90°

Lens:
Tempered glass

Reflector:
Polyethylene Terephthalate (PET)

Effective Projected Area:
EPA = 0.06

Finish:
Formulated for high durability and long-lasting color

Green Technology:
Mercury and UV free. RoHS-compliant components.

Other

5 Yr Limited Warranty:
The RAB 5-year, limited warranty covers light output, driver performance and paint finish. RAB's warranty is subject to all terms and conditions found at rablighting.com/warranty.

Note:
All values are typical (tolerance +/- 10%)

Buy American Act Compliance:
RAB values USA manufacturing! Upon request, RAB may be able to manufacture this product to be compliant with the Buy American Act (BAA). Please contact customer service to request a quote for the product to be made BAA compliant.

Copyright © 2024 RAB Lighting All Rights Reserved Note: Specifications are subject to change at any time without notice

Dimensions

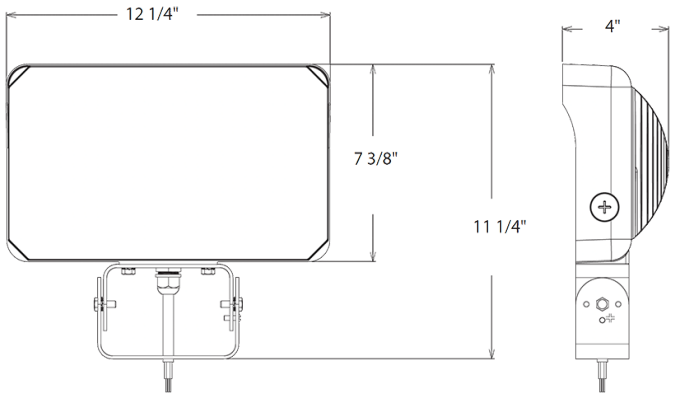

Features

- 100,000-Hour LED lifespan
- IP65 Rated
- 5-Year, limited warranty

Ordering Matrix

Family	Wattages	Mounting	Color Temp	Finish	Driver	Options
X34	XL	T				
	L = 90/80/70W **XL =** 130/110/95W **XXL =** 160/140/120W	**Blank =** Slipfitter **T =** Trunnion	**Blank =** 3000K/4000K/5000K CCT Adjustable	**Blank =** Bronze **W =** White	**Blank =** 120-277V, 0-10V Dimming	**Blank =** Selectable On/Off Photocell

Copyright © 2024 RAB Lighting All Rights Reserved Note: Specifications are subject to change at any time without notice