INSTRUCTIONS
FIELD-ADJUSTABLE W34® INSTALLATION

RAB Lighting is committed to creating high-quality, affordable, well-designed and energy-efficient LED lighting and controls that make it easy for electricians to install and end users to save energy. We'd love to hear your comments. Please call the Marketing Department at 888-RAB-1000 or email: marketing@rablighting.com



W34S-35/25/17



W34M-80/60/40



W34L-150/100/75

IMPORTANT

READ CAREFULLY BEFORE INSTALLING FIXTURE. RETAIN THESE INSTRUCTIONS FOR FUTURE REFERENCE.
RAB fixtures must be wired in accordance with the National Electrical Code and all applicable local codes. Proper grounding is required for safety. THIS PRODUCT MUST BE INSTALLED IN ACCORDANCE WITH THE APPLICABLE INSTALLATION CODE BY A PERSON FAMILIAR WITH THE CONSTRUCTION AND OPERATION OF THE PRODUCT AND THE HAZARDS INVOLVED.
WARNING: For proper weatherproof function all gaskets must be seated properly and all screws inserted and tightened firmly. Apply weatherproof silicone sealant between mounting surface and back housing. This is especially important with an uneven wall surface. Silicone all plugs and unused conduit entries.
Suitable for wet locations. Min. 90° supply conductors. Suitable for operation in ambient not exceeding 40°C. Wall Mount Only.

MOUNTING FIXTURE TO THE WALL

Fixture should not be recessed. Mount fixture on a wall with Lens facing down. Utilize **Lag Bolt Location** *(3) as* indicated in Fig. 1 to mount *(***Lag Bolts** *not provided)*.

1. Open fixture **Door** by lifting up the top **Latches** *(Fig. 2 and 3)*. **Tether Cables** are provided to keep the **Door** from falling.
2. Prepare the **Housing** for use by drilling out the appropriate holes *(if using Lag Bolt install)* as shown in Fig. 1.
3. Line up the **Housing** in desired location and mount securely.
4. Complete the wiring to the supply wires and ground. Make electrical connections as shown in wiring diagram *(Fig. 6)*. Use approved wiring connectors and wire to local NEC codes. Push all wires back into **Housing**. Be careful not to pinch wires.
5 Close **Door** and snap **Latche***(s)* back into place.

FIG. 1

W34S

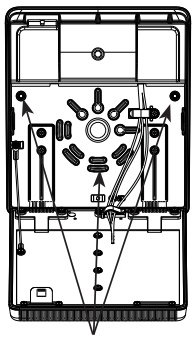

Lag Bolt Location

W34M / W34L

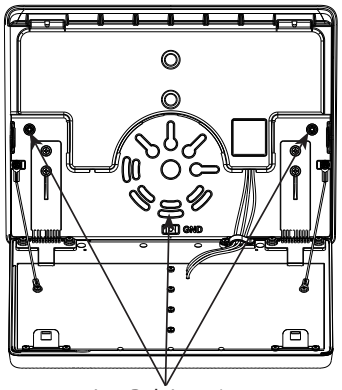

Lag Bolt Location

FIG. 2

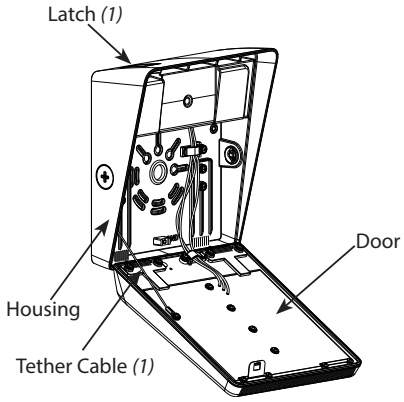

W34S

FIG. 3

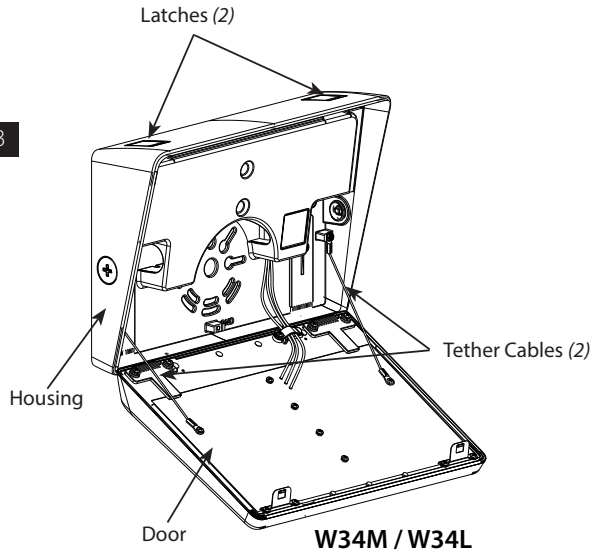

W34M / W34L

INSTRUCTIONS
FIELD-ADJUSTABLE W34® INSTALLATION

RAB Lighting is committed to creating high-quality, affordable, well-designed and energy-efficient LED lighting and controls that make it easy for electricians to install and end users to save energy. We'd love to hear your comments. Please call the Marketing Department at 888-RAB-1000 or email: marketing@rablighting.com

FIELD ADJUSTMENT

Photocell Operation:
This product is equipped with a photocell. **Photocell factory setting is set to the "OFF" position**. Should you wish to enable the Photocell **"ON"** feature slide the center switch to the **"ON"** position *(Fig 5)*. *If the Photocell is set to the "ON" position and it is daylight it may take up to 60-seconds for the light to turn off.*

Color Temperature *(CCT)* Selection:
This product is equipped with 5000K, 4000K or 3000K CCT **Color Temperature** selection. For maximum light output use the 4000K **Color Temperature**.

Power *(%)* Selection:
This product is equipped with 50%, 75% and 100% power output selection.

Follow instructions below to change **Photocell** operation, **Color Temperature** *(CCT)* and/or **Power** *(%)* from factory settings.

Factory Settings: 100% Power, 4000K CCT, Photocell/Off

1. Locate the **Selector Switch Plug** on side of housing as shown in Fig. 4 and remove plug.
2. Select **Color Temperature** *(CCT)*, **Power** *(%)* and/or **Photocell** on/off function by sliding the respective switch to the desired value *(Fig. 5)*. Re-install **Selector Switch Plug**.

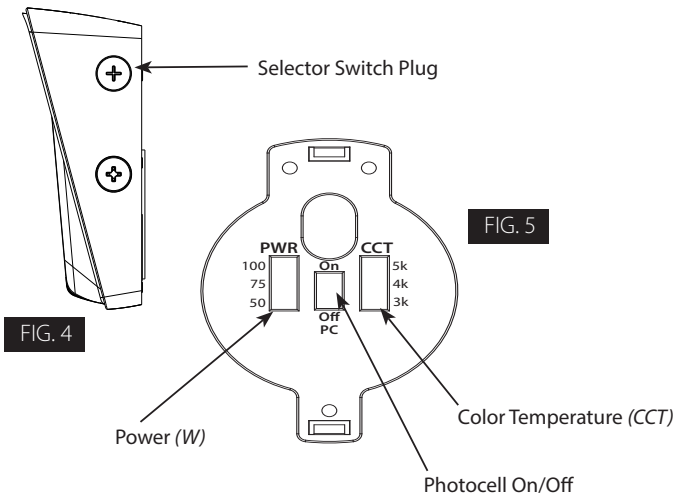

FIG. 4

FIG. 5

Note: These instructions do not cover all details or variations in equipment nor do they provide for every possible situation during installation, operation or maintenance.

0-10V DIMMABLE WIRING

Note: For external dimming control set power switch to 100% and turn off Photocell switch.

Universal voltage driver permits operation at 120V through 277V, 50 or 60 Hz. For 0-10V dimming follow the wiring directions as shown in Fig. 6.

1. Connect the black fixture lead to the **LINE** supply lead.
2. Connect the white fixture lead to the **COMMON** supply lead.
3. Connect the **GROUND** wire from fixture to supply ground.
4. Connect the purple fixture lead to the (V+) DIM lead.
5. Connect the pink fixture lead to the (V-) DIM lead.
6. Cap the yellow fixture lead if present. Do NOT connect.

NOTE: *Do not connect DIM V+ (purple)/ DIM V- (pink) to line voltage or supply ground.*

FIG. 6

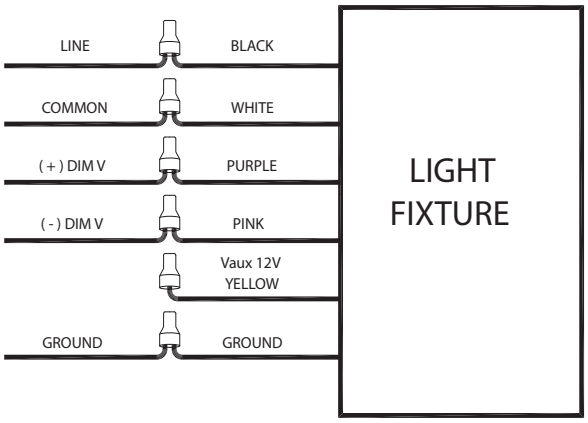

CLEANING & MAINTENANCE

CAUTION: Be sure fixture temperature is cool enough to touch. Do not clean or maintain while fixture is energized.

1. Clean glass lens with non-abrasive glass cleaning solution.
2. Do not open the fixture to clean the LED. Do not touch the LED.

TROUBLESHOOTING

1. Check that the line voltage at the fixture is correct. Refer to wiring directions.
2. Is the fixture grounded properly?
3. Is the photocell, if used, functioning properly?

© 2023 RAB LIGHTING Inc.

Easy Answers

rablighting.com	Tech Help Line	e-mail	Free Lighting Layouts
Visit our website for product info	Call our experts: 888 722-1000	Answered promptly - sales@rablighting.com	Answered online or by request

W34 - IN - 0723
P-100442

RAB WARRANTY: *RAB's warranty is subject to all terms and conditions found at rablighting.com/warranty.*