A22-4T100B



Color: Black

Weight: 11.2 lbs

Project:	Type:
Prepared By:	Date:

Driver Info

Type	Constant
120V	0.83A/0.67A/0.50A
208V	0.48A/0.38A/0.25A
240V	0.42A/0.33A/0.25A
277V	0.72A/0.29A/0.22A
Input Watts	59.9-101W

LED Info

Watts	100/80/60W
Color Temp	3000K/4000K/5000K
Color Accuracy	80-84 CRI
L70 Lifespan	100,000 Hours
Lumens	8,938-14,368 lm
Efficacy	128.9-160 lm/W

Technical Specifications

Field Adjustability

Field Adjustable:
Field Adjustable Light Output:
100W/80W/60W (factory default: 100W)
Color Temperature Selectable:
3000K, 4000K and 5000K (factory default:4000K)

Compliance

UL Listed:
Suitable for wet locations. Suitable for mounting within 4ft (1.2m) of the ground.

IESNA LM-79 & LM-80 Testing:
RAB LED luminaires and LED components have been tested by an independent laboratory in accordance with IESNA LM-79 and LM-80.

IP Rating:
Ingress protection rating of IP66 for dust and water

DLC Listed:
This product is listed by Design Lights Consortium (DLC) as an ultra-efficient premium product that qualifies for the highest tier of rebates from DLC Member Utilities. Designed to meet DLC 5.1 requirements.
DLC Product Code: S-N4M58S

Performance

Lifespan:
100,000-Hour LED lifespan based on IES LM-80 results and TM-21 calculations

Wattage Equivalency:
100W: Replaces up to 400W Metal Halide (MH) or 310W High Pressure Sodium (HPS)
80W: Replaces up to 350W Metal Halide (MH) or 250W High Pressure Sodium (HPS)
60W: Replaces up to 250W Metal Halide (MH) or 200W High Pressure Sodium (HPS)

Electrical

Driver:
Constant Current, Class 1, 120-277V, 50/60 Hz:
100W: 120V: 0.83A, 208V: 0.48A, 240V: 0.42A, 277V: 0.36A
80W: 120V: 0.67A, 208V: 0.38A, 240V:0.33A, 277V: 0.29A
60W: 120V: 0.5A, 208V: 0.29A, 240V:0.25A, 277V: 0.22A

Dimming Driver:
Driver includes dimming control wiring for 0-10V dimming systems. Requires separate 0-10V DC dimming circuit. Dims down to 10%.

THD:
3.25% at 120V, 5.82% at 277V

Power Factor:
99.7% at 120V, 94.5% at 277V

7-Pin Receptacle with Shorting Cap:
ANSI C136.41 7-pin receptacle, compatible with wireless control systems

Surge Protection:
6kV

Construction

IES Classification:
The Type IV distribution (also known as a Forward Throw) is especially suited for mounting on the sides of buildings and walls, and for illuminating the perimeter of parking areas. It produces a semicircular distribution with essentially the same candlepower at lateral angles from 90° to 270°.

Cold Weather Starting:
The minimum starting temperature is -40°C (-40°F)

Maximum Ambient Temperature:
Suitable for use in up to 40°C (104°F)

Lens:
Polycarbonate lens

Copyright © 2024 RAB Lighting All Rights Reserved Note: Specifications are subject to change at any time without notice

Technical Specifications (continued)

Housing:
Die-cast aluminum

Effective Projected Area:
1 Fixture: 0.3
2 Fixtures: 0.7
3 Fixtures: 1.2
4 Fixtures: 1.2

Mounting:
Adjustable universal pole mount (standard).
Slipfitter and wall mount accessory available.

Finish:
Formulated for high durability and long-lasting color

Gaskets:
High-temperature silicone gaskets

Green Technology:
Mercury and UV free. RoHS-compliant components.

LED Characteristics

LEDs:
Long-life, high-efficacy, surface-mount LEDs

Color Uniformity:
RAB's range of Correlated Color Temperature follows the guidelines of the American National Standard for Specifications for the Chromaticity of Solid State Lighting (SSL) Products, ANSI C78.377-2017.

Optical

BUG Rating:
Type 4
100W: B2 U0 G2
80W: B2 U0 G2
60W: B2 U0 G2

Other

5 Yr Limited Warranty:
The RAB 5-year, limited warranty covers light output, driver performance and paint finish. RAB's warranty is subject to all terms and conditions found at rablighting.com/warranty.

Buy American Act Compliance:
RAB values USA manufacturing! Upon request, RAB may be able to manufacture this product to be compliant with the Buy American Act (BAA). Please contact customer service to request a quote for the product to be made BAA compliant.

Copyright © 2024 RAB Lighting All Rights Reserved Note: Specifications are subject to change at any time without notice

A22-4T100B

Dimensions

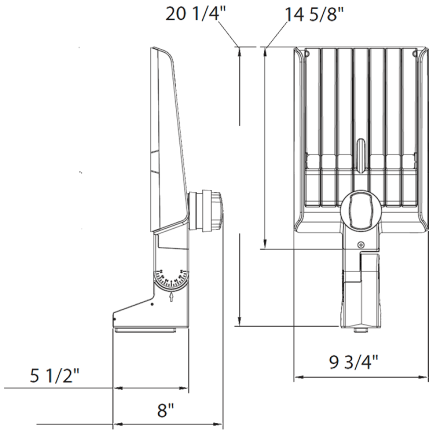

Features

- DLC Premium listed
- Adjustable Universal Pole Mount
- 7-Pin Receptacle with Shorting Cap
- IP66 Rated
- 100,000-Hour LED lifespan
- 5-Year, limited warranty

Ordering Matrix

Family		Optics	Wattages	Mounting	Color Temp	Finish	Voltage	Options
A22	–	4T	100			B		
		2T = Type II **4T =** Type IV **5T =** Type V **Blank =** Type III	**70 =** 70/60/50W **100 =** 100/80/60W **150 =** 150/120/100W **200 =** 200/180/160W **320 =** 320/280/250W	**Blank =** Universal Adjustable Pole Mount	**Blank =** 3000K/4000K/5000K CCT Adjustable	**Blank =** Bronze **W =** White **B =** Black	**Blank =** 120-277V, 0-10V Dimming **/480 =** 480V, 0-10V Dimming	**Blank =** 7-Pin Receptacle with Shorting Cap **/MVS =** 7-Pin Receptacle with Shorting Cap and Microwave Motion Sensor **/LCBS =** Lightcloud Blue Enabled w/PIR Sensor **/LCBS/MVS =** Lightcloud Blue Enabled w/MVS Sensor

Copyright © 2024 RAB Lighting All Rights Reserved Note: Specifications are subject to change at any time without notice