# A22-200W

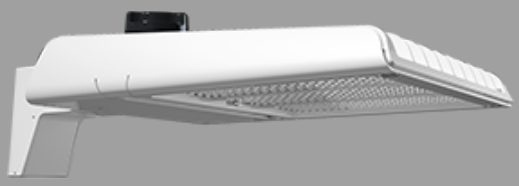

Color: White

Weight: 13.0 lbs

| | |
|---|---|
| **Project:** | **Type:** |
| **Prepared By:** | **Date:** |

### Driver Info

| | |
|---|---|
| Type | Constant |
| 120V | 1.67A/1.50A/1.33A |
| 208V | 0.96A/0.87A/0.77A |
| 240V | 0.83A/0.75A/0.67A |
| 277V | 0.72A/0.65A/0.58A |
| Input Watts | 155.1-200.5W |

### LED Info

| | |
|---|---|
| Watts | 200/180/160W |
| Color Temp | 3000K/4000K/5000K |
| Color Accuracy | 80-84 CRI |
| L70 Lifespan | 100,000 Hours |
| Lumens | 21,533-27,908 lm |
| Efficacy | 125.8-152 lm/W |

## Technical Specifications

### Field Adjustability

**Field Adjustable:**
Field Adjustable Light Output:
200W/180W/160W (factory default: 200W)
Color Temperature Selectable:
3000K, 4000K and 5000K (factory default:4000K)

### Compliance

**UL Listed:**
Suitable for wet locations. Suitable for mounting within 4ft (1.2m) of the ground.

**IESNA LM-79 & LM-80 Testing:**
RAB LED luminaires and LED components have been tested by an independent laboratory in accordance with IESNA LM-79 and LM-80.

**IP Rating:**
Ingress protection rating of IP66 for dust and water

**Trade Agreements Act Compliant:**
This product is a product of Cambodia and a "designated country" end product that complies with the Trade Agreements Act

**DLC Listed:**
This product is listed by Design Lights Consortium (DLC) as an ultra-efficient premium product that qualifies for the highest tier of rebates from DLC Member Utilities. Designed to meet DLC 5.1 requirements.
DLC Product Code: S-GZSNQT

### Performance

**Lifespan:**
100,000-Hour LED lifespan based on IES LM-80 results and TM-21 calculations

**Wattage Equivalency:**
200W: Replaces up to 750W Metal Halide (MH) or 400W High Pressure Sodium (HPS)
180W: Replaces up to 750W Metal Halide (MH) or 400W High Pressure Sodium (HPS)
160W: Replaces up to 750W Metal Halide (MH) or 400W High Pressure Sodium (HPS)

### Electrical

**Driver:**
Constant Current, Class 1, 120-277V, 50/60 Hz:
150W: 120V: 1.25A, 208V: 0.72A, 240V: 0.63A, 277V: 0.54A
120W: 120V: 1.0A, 208V: 0.58A, 240V: 0.5A, 277V: 0.43A
100W: 120V: 0.83A, 208V: 0.48A, 240V: 0.42A, 277V: 0.36A

**Dimming Driver:**
Driver includes dimming control wiring for 0-10V dimming systems. Requires separate 0-10V DC dimming circuit. Dims down to 10%.

**THD:**
2.46% at 120V, 4.28% at 277V

**Power Factor:**
99.9% at 120V, 96.5% at 277V

**7-Pin Receptacle with Shorting Cap:**
ANSI C136.41 7-pin receptacle, compatible with wireless control systems

**Surge Protection:**
6kV

### Construction

**IES Classification:**
The Type III distribution is ideal for roadway, general parking and other area lighting applications where a larger pool of lighting is required. It is intended to be located near the side of the area, allowing the light to project outward and fill the area.

**Cold Weather Starting:**
The minimum starting temperature is -40°C (-40°F)

**Maximum Ambient Temperature:**
Suitable for use in up to 40°C (104°F)

**Lens:**
Polycarbonate lens

**Housing:**
Die-cast aluminum


Copyright © 2024 RAB Lighting All Rights Reserved Note: Specifications are subject to change at any time without notice

## Technical Specifications (continued)

**Effective Projected Area:**
1 Fixture: 0.4
2 Fixtures: 0.8
3 Fixtures: 1.4
4 Fixtures: 1.4

**Mounting:**
Adjustable universal pole mount (standard).
Slipfitter and wall mount accessory available.

**Finish:**
Formulated for high durability and long-lasting color

**Gaskets:**
High-temperature silicone gaskets

**Green Technology:**
Mercury and UV free. RoHS-compliant components.

### LED Characteristics

**LEDs:**
Long-life, high-efficacy, surface-mount LEDs

**Color Uniformity:**
RAB's range of Correlated Color Temperature follows the guidelines of the American National Standard for Specifications for the Chromaticity of Solid State Lighting (SSL) Products, ANSI C78.377-2017.

### Optical

**BUG Rating:**
Type 3
200W: B3 U0 G3
180W: B3 U0 G3
160W: B3 U0 G2

### Other

**5 Yr Limited Warranty:**
The RAB 5-year, limited warranty covers light output, driver performance and paint finish. RAB's warranty is subject to all terms and conditions found at rablighting.com/warranty.

**Buy American Act Compliance:**
RAB values USA manufacturing! Upon request, RAB may be able to manufacture this product to be compliant with the Buy American Act (BAA). Please contact customer service to request a quote for the product to be made BAA compliant.


Copyright © 2024 RAB Lighting All Rights Reserved Note: Specifications are subject to change at any time without notice

# A22-200W

## Dimensions

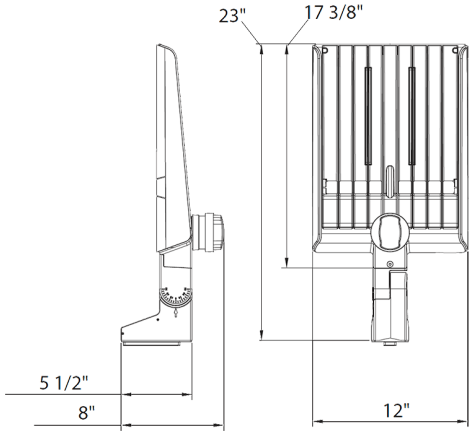


## Features

- DLC Premium listed
- Adjustable Universal Pole Mount
- 7-Pin Receptacle with Shorting Cap
- IP66 Rated
- 100,000-Hour LED lifespan
- 5-Year, limited warranty

## Ordering Matrix

| Family | | Optics | Wattages | Mounting | Color Temp | Finish | Voltage | Options |
|---|---|---|---|---|---|---|---|---|
| A22 | – | | 200 | | | W | | |
| | | **2T =** Type II<br>**4T =** Type IV<br>**5T =** Type V<br>**Blank =** Type III | **70 =** 70/60/50W<br>**100 =** 100/80/60W<br>**150 =** 150/120/100W<br>**200 =** 200/180/160W<br>**320 =** 320/280/250W | **Blank =** Universal Adjustable Pole Mount | **Blank =** 3000K/4000K/5000K CCT Adjustable | **Blank =** Bronze<br>**W =** White<br>**B =** Black | **Blank =** 120-277V, 0-10V Dimming<br>**/480 =** 480V, 0-10V Dimming | **Blank =** 7-Pin Receptacle with Shorting Cap<br>**/MVS =** 7-Pin Receptacle with Shorting Cap and Microwave Motion Sensor<br>**/LCBS =** Lightcloud Blue Enabled w/PIR Sensor<br>**/LCBS/MVS =** Lightcloud Blue Enabled w/MVS Sensor |


Copyright © 2024 RAB Lighting All Rights Reserved Note: Specifications are subject to change at any time without notice