A22-320/MVS



Color: Bronze

Weight: 15.8 lbs

Project:	**Type:**
Prepared By:	**Date:**

Driver Info

Type	Constant
120V	2.66A/2.33A/2.08A
208V	1.53A/1.34A/1.20A
240V	1.33A/1.16A/1.04A
277V	1.15A/1.01A/0.90A
Input Watts	245.5-323.1W

LED Info

Watts	320/280/250W
Color Temp	3000K/4000K/5000K
Color Accuracy	80-84 CRI
L70 Lifespan	100,000 Hours
Lumens	34,478-44,898 lm
Efficacy	125.9-153.5 lm/W

Technical Specifications

Field Adjustability

Field Adjustable:
Field Adjustable Light Output:
320W/280W/250W (factory default: 320W)
Color Temperature Selectable:
3000K, 4000K and 5000K (factory default:4000K)

Compliance

UL Listed:
Suitable for wet locations. Suitable for mounting within 4ft (1.2m) of the ground.

IESNA LM-79 & LM-80 Testing:
RAB LED luminaires and LED components have been tested by an independent laboratory in accordance with IESNA LM-79 and LM-80.

IP Rating:
Ingress protection rating of IP66 for dust and water

DLC Listed:
This product is listed by Design Lights Consortium (DLC) as an ultra-efficient premium product that qualifies for the highest tier of rebates from DLC Member Utilities. Designed to meet DLC 5.1 requirements.
DLC Product Code: S-KPNS31

Performance

Lifespan:
100,000-Hour LED lifespan based on IES LM-80 results and TM-21 calculations

Wattage Equivalency:
320W: Replaces up to 1,000W Metal Halide (MH) or 750W High Pressure Sodium (HPS)
280W: Replaces up to 1,000W Metal Halide (MH) or 600W High Pressure Sodium (HPS)
250W: Replaces up to 750W Metal Halide (MH) or 600W High Pressure Sodium (HPS)

Electrical

Driver:
Constant Current, Class 1, 120-277V, 50/60 Hz:
320W: 120V: 2.66A, 208V: 1.53A, 240V: 1.33A, 277V: 1.15A
280W: 120V: 2.33A, 208V: 1.34A, 240V: 1.16A, 277V: 1.01A
250W: 120V: 2.08A, 208V: 1.2A, 240V: 1.04A, 277V: 0.9A

Dimming Driver:
Driver includes dimming control wiring for 0-10V dimming systems. Requires separate 0-10V DC dimming circuit. Dims down to 10%.

THD:
4.01% at 120V, 6.71% at 277V

Power Factor:
99.9% at 120V, 97.7% at 277V

7-Pin Receptacle with Shorting Cap:
ANSI C136.41 7-pin receptacle, compatible with wireless control systems

Surge Protection:
6kV

Construction

IES Classification:
The Type III distribution is ideal for roadway, general parking and other area lighting applications where a larger pool of lighting is required. It is intended to be located near the side of the area, allowing the light to project outward and fill the area.

Cold Weather Starting:
The minimum starting temperature is -40°C (-40°F)

Maximum Ambient Temperature:
Suitable for use in up to 40°C (104°F)

Lens:
Polycarbonate lens

Housing:
Die-cast aluminum

Copyright © 2024 RAB Lighting All Rights Reserved Note: Specifications are subject to change at any time without notice

Technical Specifications (continued)

Effective Projected Area:
1 Fixture: 0.4
2 Fixtures: 0.8
3 Fixtures: 1.6
4 Fixtures: 1.6

Mounting:
Adjustable universal pole mount (standard). Slipfitter and wall mount accessory available.

Finish:
Formulated for high durability and long-lasting color

Gaskets:
High-temperature silicone gaskets

Green Technology:
Mercury and UV free. RoHS-compliant components.

LED Characteristics

LEDs:
Long-life, high-efficacy, surface-mount LEDs

Color Uniformity:
RAB's range of Correlated Color Temperature follows the guidelines of the American National Standard for Specifications for the Chromaticity of Solid State Lighting (SSL) Products, ANSI C78.377-2017.

Optical

BUG Rating:
Type 3
320W: B4 U0 G4
280W: B4 U0 G4
250W: B4 U0 G4

Sensor Specifications

Voltage Input:
12V DC Input, IC Solu;tion

Operating Voltage:
10-15V

Control:
On/Off control

Detection Area:
25%/50%/75%/100% (Factory Setting: 100%)

Microwave Frequency:
5.8GHz +/- 75MHz

Hold Time:
5 sec/30 sec/1 min/10 min/20 min/30 min (Factory Setting: 5 sec)

Microwave Power:
<0.3mW

Switching Capacity:
<40mA

Daylight Threshold:
2Lux/10Lux/30Lux/50Lux/80Lux/120Lux/Disable (Factory Setting: Disable)

Mounting Height:
2.5 - 4.5 m/8.2 - 14.76 ft

Operating Current:
<30mA

Stand-by Period:
0 sec/10 sec/30 sec/1 min/5 min/10 min/+∞ (Factory Setting: 0 sec)

Detection Range:
9.84 - 22.96 ft (3 - 7 m)

Control Method:
0-10V

Stand-by Dimming Level:
10%/20%/30%/50% (Factory Setting: 10%)

Detection Angle:
360° (ceiling mounted)

Operating Temperature:
-35°C to +70°C (-31°F to + 158°F)

Remote Control:
Adjust settings using remote control (catalog# MSR1). Only available with 0-10V dimming driver options. Remote control available here.

Other

5 Yr Limited Warranty:
The RAB 5-year, limited warranty covers light output, driver performance and paint finish. RAB's warranty is subject to all terms and conditions found at rablighting.com/warranty.

Buy American Act Compliance:
RAB values USA manufacturing! Upon request, RAB may be able to manufacture this product to be compliant with the Buy American Act (BAA). Please contact customer service to request a quote for the product to be made BAA compliant.

Copyright © 2024 RAB Lighting All Rights Reserved Note: Specifications are subject to change at any time without notice

A22-320/MVS

Dimensions

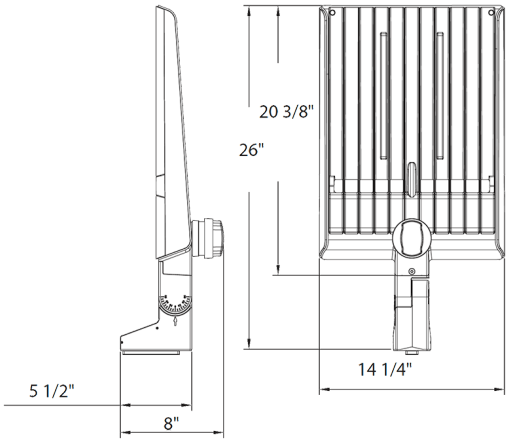

Features

- DLC Premium listed
- Adjustable Universal Pole Mount
- 7-Pin Receptacle with Shorting Cap
- IP66 Rated
- 100,000-Hour LED lifespan
- 5-Year, limited warranty

Ordering Matrix

Family		Optics	Wattages	Mounting	Color Temp	Finish	Voltage	Options
A22	–		320					/MVS
		2T = Type II **4T =** Type IV **5T =** Type V **Blank =** Type III	**70 =** 70/60/50W **100 =** 100/80/60W **150 =** 150/120/100W **200 =** 200/180/160W **320 =** 320/280/250W	**Blank =** Universal Adjustable Pole Mount	**Blank =** 3000K/4000K/5000K CCT Adjustable	**Blank =** Bronze **W =** White **B =** Black	**Blank =** 120-277V, 0-10V Dimming **/480 =** 480V, 0-10V Dimming	**Blank =** 7-Pin Receptacle with Shorting Cap **/MVS =** 7-Pin Receptacle with Shorting Cap and Microwave Motion Sensor **/LCBS =** Lightcloud Blue Enabled w/PIR Sensor **/LCBS/MVS =** Lightcloud Blue Enabled w/MVS Sensor

Copyright © 2024 RAB Lighting All Rights Reserved Note: Specifications are subject to change at any time without notice