A22-5T150/MVS



Color: Bronze

Weight: 13.0 lbs

Project:	**Type:**
Prepared By:	**Date:**

Driver Info

Type	Constant
120V	1.25A/1.00A/0.83A
208V	0.72A/0.58A/0.48A
240V	0.63A/0.50A/0.83A
277V	0.54A/0.43A/0.36A
Input Watts	99.4-151.4W

LED Info

Watts	150/120/100W
Color Temp	3000K/4000K/5000K
Color Accuracy	80-84 CRI
L70 Lifespan	100,000 Hours
Lumens	15,342-22,677 lm
Efficacy	135.7-167.1 lm/W

Technical Specifications

Field Adjustability

Field Adjustable:
Field Adjustable Light Output:
150W/120W/100W (factory default: 150W)
Color Temperature Selectable:
3000K, 4000K and 5000K (factory default:4000K)

Compliance

UL Listed:
Suitable for wet locations. Suitable for mounting within 4ft (1.2m) of the ground.

IESNA LM-79 & LM-80 Testing:
RAB LED luminaires and LED components have been tested by an independent laboratory in accordance with IESNA LM-79 and LM-80.

IP Rating:
Ingress protection rating of IP66 for dust and water

DLC Listed:
This product is listed by Design Lights Consortium (DLC) as an ultra-efficient premium product that qualifies for the highest tier of rebates from DLC Member Utilities. Designed to meet DLC 5.1 requirements.
DLC Product Code: S-Q13M99

Performance

Lifespan:
100,000-Hour LED lifespan based on IES LM-80 results and TM-21 calculations

Wattage Equivalency:
150W: Replaces up to 400W Metal Halide (MH) or 400W High Pressure Sodium (HPS)
120W: Replaces up to 400W Metal Halide (MH) or 310W High Pressure Sodium (HPS)
100W: Replaces up to 400W Metal Halide (MH) or 310W High Pressure Sodium (HPS)

Electrical

Driver:
Constant Current, Class 1, 120-277V, 50/60 Hz:
150W: 120V: 1.25A, 208V: 0.72A, 240V: 0.63A, 277V: 0.54A
120W: 120V: 1.0A, 208V: 0.58A, 240V: 0.5A, 277V: 0.43A
100W: 120V: 0.83A, 208V: 0.48A, 240V: 0.42A, 277V: 0.36A

Dimming Driver:
Driver includes dimming control wiring for 0-10V dimming systems. Requires separate 0-10V DC dimming circuit. Dims down to 10%.

THD:
4.11% at 120V, 6.6% at 277V

Power Factor:
99.8% at 120V, 96.3% at 277V

7-Pin Receptacle with Shorting Cap:
ANSI C136.41 7-pin receptacle, compatible with wireless control systems

Surge Protection:
6kV

Construction

IES Classification:
The Type V distribution produces light in a wide and uniform 360° pattern that is perfect for large outdoor areas such as parking lots, corporate parks and retail settings

Cold Weather Starting:
The minimum starting temperature is -40°C (-40°F)

Maximum Ambient Temperature:
Suitable for use in up to 40°C (104°F)

Lens:
Polycarbonate lens

Housing:
Die-cast aluminum

Copyright © 2024 RAB Lighting All Rights Reserved Note: Specifications are subject to change at any time without notice

Technical Specifications (continued)

Effective Projected Area:
1 Fixture: 0.4
2 Fixtures: 0.8
3 Fixtures: 1.4
4 Fixtures: 1.4

Mounting:
Adjustable universal pole mount (standard). Slipfitter and wall mount accessory available.

Finish:
Formulated for high durability and long-lasting color

Gaskets:
High-temperature silicone gaskets

Green Technology:
Mercury and UV free. RoHS-compliant components.

LED Characteristics

LEDs:
Long-life, high-efficacy, surface-mount LEDs

Color Uniformity:
RAB's range of Correlated Color Temperature follows the guidelines of the American National Standard for Specifications for the Chromaticity of Solid State Lighting (SSL) Products, ANSI C78.377-2017.

Optical

BUG Rating:
Type 5
150W: B4 U0 G2
120W: B4 U0 G2
100W: B4 U0 G2

Sensor Specifications

Voltage Input:
12V DC Input, IC Solu;tion

Operating Voltage:
10-15V

Control:
On/Off control

Detection Area:
25%/50%/75%/100% (Factory Setting: 100%)

Microwave Frequency:
5.8GHz +/- 75MHz

Hold Time:
5 sec/30 sec/1 min/10 min/20 min/30 min (Factory Setting: 5 sec)

Microwave Power:
<0.3mW

Switching Capacity:
<40mA

Daylight Threshold:
2Lux/10Lux/30Lux/50Lux/80Lux/120Lux/Disable (Factory Setting: Disable)

Mounting Height:
2.5 - 4.5 m/8.2 - 14.76 ft

Operating Current:
<30mA

Stand-by Period:
0 sec/10 sec/30 sec/1 min/5 min/10 min/+∞ (Factory Setting: 0 sec)

Detection Range:
9.84 - 22.96 ft (3 - 7 m)

Control Method:
0-10V

Stand-by Dimming Level:
10%/20%/30%/50% (Factory Setting: 10%)

Detection Angle:
360° (ceiling mounted)

Operating Temperature:
-35°C to +70°C (-31°F to + 158°F)

Remote Control:
Adjust settings using remote control (catalog# MSR1). Only available with 0-10V dimming driver options. Remote control available here.

Other

5 Yr Limited Warranty:
The RAB 5-year, limited warranty covers light output, driver performance and paint finish. RAB's warranty is subject to all terms and conditions found at rablighting.com/warranty.

Buy American Act Compliance:
RAB values USA manufacturing! Upon request, RAB may be able to manufacture this product to be compliant with the Buy American Act (BAA). Please contact customer service to request a quote for the product to be made BAA compliant.

Copyright © 2024 RAB Lighting All Rights Reserved Note: Specifications are subject to change at any time without notice

A22-5T150/MVS

Dimensions

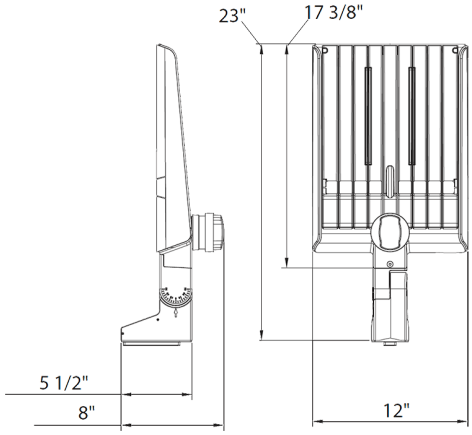

Features

- DLC Premium listed
- Adjustable Universal Pole Mount
- 7-Pin Receptacle with Shorting Cap
- IP66 Rated
- 100,000-Hour LED lifespan
- 5-Year, limited warranty

Ordering Matrix

Family		Optics	Wattages	Mounting	Color Temp	Finish	Voltage	Options
A22	–	5T	150					/MVS
		2T = Type II **4T =** Type IV **5T =** Type V **Blank =** Type III	**70 =** 70/60/50W **100 =** 100/80/60W **150 =** 150/120/100W **200 =** 200/180/160W **320 =** 320/280/250W	**Blank =** Universal Adjustable Pole Mount	**Blank =** 3000K/4000K/5000K CCT Adjustable	**Blank =** Bronze **W =** White **B =** Black	**Blank =** 120-277V, 0-10V Dimming **/480 =** 480V, 0-10V Dimming	**Blank =** 7-Pin Receptacle with Shorting Cap **/MVS =** 7-Pin Receptacle with Shorting Cap and Microwave Motion Sensor **/LCBS =** Lightcloud Blue Enabled w/PIR Sensor **/LCBS/MVS =** Lightcloud Blue Enabled w/MVS Sensor

Copyright © 2024 RAB Lighting All Rights Reserved Note: Specifications are subject to change at any time without notice