A17-5T375



Color: Bronze

Weight: 24.2 lbs

Project:	**Type:**
Prepared By:	**Date:**

Driver Info

Type	Constant Current
120V	3.01A/2.41A/1.93A
208V	1.74A/1.39A/1.11A
240V	1.57A/1.25A/1.00A
277V	1.40A/1.12A/0.90A
Input Watts	238.1-376.4W

LED Info

Watts	375/300/240W
Color Temp	3000K/4000K/5000K
Color Accuracy	82-84 CRI
L70 Lifespan	100,000 Hours
Lumens	39,754-60,553 lm
Efficacy	156-171.6 lm/W

Technical Specifications

Compliance

UL Listed:
Suitable for wet locations

IESNA LM-79 & LM-80 Testing:
RAB LED luminaires and LED components have been tested by an independent laboratory in accordance with IESNA LM-79 and LM-80.

IP Rating:
Ingress protection rating of IP65 for dust and water

DLC Listed:
This product is listed by Design Lights Consortium (DLC) as an ultra-efficient premium product that qualifies for the highest tier of rebates from DLC Member Utilities. Designed to meet DLC 5.1 requirements.
DLC Product Code: S-LTXLBH (Outdoor Pole/Arm-Mounted Area and Roadway Luminaires)S-V4L40B (Architectural Flood and Spot Luminaires)

Electrical

Driver:
375W: Constant Current, Class 1, 120-277V, 50/60 Hz, 120V: 3.01A, 208V: 1.74A, 240V: 1.57A, 277V: 1.40A
300W: Constant Current, Class 1, 120-277V, 50/60 Hz, 120V: 2.41A, 208V: 1.39A, 240V: 1.25A, 277V: 1.12A
240W: Constant Current, Class 1, 120-277V, 50/60 Hz, 120V: 1.93A, 208V: 1.11A, 240V: 1.00A, 277V: 0.90A

Dimming Driver:
Driver includes dimming control wiring for 0-10V dimming systems. Requires separate 0-10V DC dimming circuit. Dims down to 10%.

Surge Protection:
6kV

Performance

Lifespan:
100,000-Hour LED lifespan based on IES LM-80 results and TM-21 calculations

Construction

IES Classification:
The Type V distribution produces light in a wide and uniform 360° pattern that is perfect for large outdoor areas such as parking lots, corporate parks and retail settings

Cold Weather Starting:
The minimum starting temperature is -40°C (-40°F)

Maximum Ambient Temperature:
Suitable for use in up to 40°C (104°F)

Lens:
Polycarbonate lens

Housing:
Die-cast aluminum housing, lens frame and mounting arm

Vibration Rating:
3G vibration rating per ANSI C136.31

Effective Projected Area (Without Shield):
1 Fixture: 0.8 ft^2
2 Fixtures at 90°: 1.18 ft^2
2 Fixtures at 180°: 1.6 ft^2
3 Fixtures at 90°: 1.98 ft^2
4 Fixtures at 90°: 1.98 ft^2

Effective Projected Area (With Shield):
1 Fixture: 0.84 ft^2
2 Fixtures at 90°: 1.59 ft^2
2 Fixtures at 180°: 1.68 ft^2
3 Fixtures at 90°: 2.43 ft^2
4 Fixtures at 90°: 2.43 ft^2

Copyright © 2024 RAB Lighting All Rights Reserved Note: Specifications are subject to change at any time without notice

Technical Specifications (continued)

Mounting:
Universal mounting arm compatible for hole spacing patterns from 1" to 5 1/2" center to center. Round Pole Adaptor plate included as a standard. Easy slide and lock to mount fixture with ease. Round pole diameter must be >4" to mount fixtures at 90° orientation.

Finish:
Formulated for high durability and long-lasting color

Green Technology:
Mercury and UV free. RoHS-compliant components.

LED Characteristics

LEDs:
Long-life, high-efficiency, surface-mount LEDs

Color Uniformity:
RAB's range of Correlated Color Temperature follows the guidelines of the American National Standard for Specifications for the Chromaticity of Solid State Lighting (SSL) Products, ANSI C78.377-2017.

Optical

BUG Rating:
B5 U0 G4

Other

5 Yr Limited Warranty:
The RAB 5-year, limited warranty covers light output, driver performance and paint finish. RAB's warranty is subject to all terms and conditions found at rablighting.com/warranty.

Buy American Act Compliance:
RAB values USA manufacturing! Upon request, RAB may be able to manufacture this product to be compliant with the Buy American Act (BAA). Please contact customer service to request a quote for the product to be made BAA compliant.

Copyright © 2024 RAB Lighting All Rights Reserved Note: Specifications are subject to change at any time without notice

Dimensions

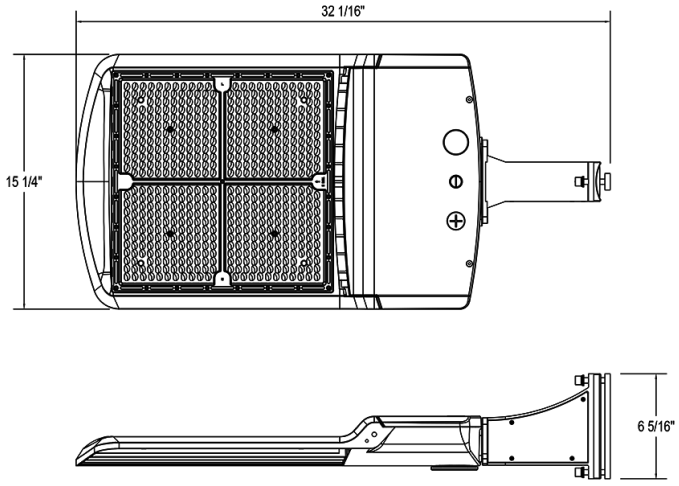

Features

- 0-10V Dimming, standard
- 100,000-hour LED lifespan
- 5-Year, limited warranty

Ordering Matrix

Family		Distribution	Wattage/Lumens	Mounting	Color Temp	Finish	Voltage	Options
A17	–	5T	375					
		4T = Type IV **5T =** Type V **3T =** Type III	**70 =** 70/60/50W **100 =** 100/80/60W **150 =** 150/120/100W **200 =** 200/180/160W **300 =** 300/240/200W **375 =** 375/300/240W **480 =** 480/400/320W	**SF =** Slipfitter (Factory installed SF available in 150W) [1] **Blank =** Universal Pole Mount	**Blank =** 3000K/4000K/5000K CCT Adjustable	**Blank =** Bronze	**Blank =** 120-277V, 0-10V Dimming **/480 =** 480V, 0-10V Dimming	**Blank =** No Option **/3PRS =** 3-pin Receptacle and Shorting Cap **/7PRS =** 7-pin Receptacle and Shorting Cap **/MVS =** Microwave Motion Sensor **/LCBS =** Lightcloud Blue Enabled w/PIR Sensor **/LCBS/MVS =** Lightcloud Blue Enabled w/MVS Sensor

[1] *1Slipfitter Mount available on 150W only*

Type II distribution available as special order.

Wall mount and roadway arm mount available as optional accessories.

Copyright © 2024 RAB Lighting All Rights Reserved Note: Specifications are subject to change at any time without notice