A22SFB



Color: Black

Weight: 1.6 lbs

Project:	**Type:**
Prepared By:	**Date:**

Driver Info

Type	N/A
120V	N/A
208V	N/A
240V	N/A
277V	N/A
Input Watts	N/A

LED Info

Watts	N/A
Color Temp	5000K
Color Accuracy	N/A
L70 Lifespan	100,000 Hours
Lumens	N/A
Efficacy	N/A

Technical Specifications

Performance

Description :
Slipfitter Mount

Compatible Products:
A22

Construction

Finish:
Formulated for high durability and long-lasting color

Compliance

Trade Agreements Act Compliant:
This product is a product of Cambodia and a "designated country" end product that complies with the Trade Agreements Act

Other

Buy American Act Compliance:
RAB values USA manufacturing! Upon request, RAB may be able to manufacture this product to be compliant with the Buy American Act (BAA). Please contact customer service to request a quote for the product to be made BAA compliant.

Copyright © 2024 RAB Lighting All Rights Reserved Note: Specifications are subject to change at any time without notice

Dimensions

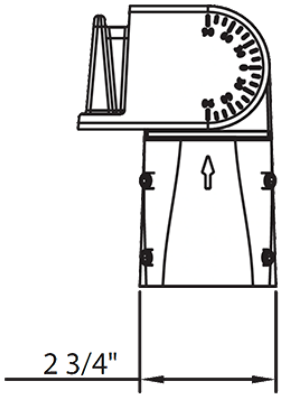

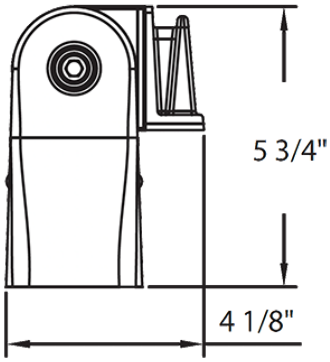

Copyright © 2024 RAB Lighting All Rights Reserved Note: Specifications are subject to change at any time without notice