INSTRUCTIONS

A17™ FIELD-ADJUSTABLE INSTALLATION

RAB Lighting is committed to creating high-quality, affordable, well-designed and energy-efficient LED lighting and controls that make it easy for electricians to install and end users to save energy. We'd love to hear your comments. Please call the Marketing Department at 888-RAB-1000 or email: marketing@rablighting.com



70W, 100W, 150W



200W, 300W



375W, 480W

IMPORTANT

READ CAREFULLY BEFORE INSTALLING FIXTURE. RETAIN THESE INSTRUCTIONS FOR FUTURE REFERENCE.
RAB fixtures must be wired in accordance with the National Electrical Code and all applicable local codes. Proper grounding is required for safety. THIS PRODUCT MUST BE INSTALLED IN ACCORDANCE WITH THE APPLICABLE INSTALLATION CODE BY A PERSON FAMILIAR WITH THE CONSTRUCTION AND OPERATION OF THE PRODUCT AND THE HAZARDS INVOLVED.
WARNING: Make certain power is OFF before installing or maintaining fixture. No user serviceable parts inside.
WARNING: Do not use an electric generator to test LED fixtures.
WARNING: Min 75°C SUPPLY CONDUCTORS.
Suitable for wet locations.

MOUNTING THE UNIVERSAL ARM ON THE FIXTURE

1. Remove the **Arm Cover** from the **Arm** by loosening **Arm Cover Screws** as shown in Fig. 1.
2. Feed wires from fixture into **Arm**.
3. Line up **Arm** to the fixture. Secure the **Arm** to the fixture with *(4)* **Bolts**.
4. Replace the **Arm Cover** and secure with **Screws** as shown in Fig. 2.

   Note: See Pole Drilling Pattern Detail *(Fig. 8)*.

FIG. 1

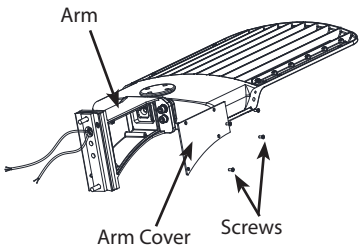

FIG. 2

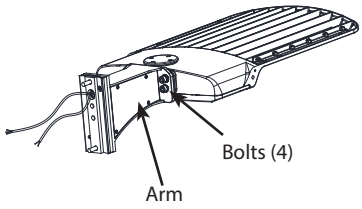

Square Pole Mount

1. Place the **Bolster Plate** inside the **Pole** as shown in Fig. 3.
2. Remove the **Round Pole Adaptor Plate**.
3. Fix **Arm** to **Square Pole** with **Bolts**.
4. Open the **Arm Cover** and pull the wires into the **Arm**.
5. Feed supply wires from the **Pole** into the **Arm**. Make appropriate wire connections per NEC *(Fig. 7)*.
6. Replace **Arm Cover** and ensure **Gasket** is in place

FIG. 3

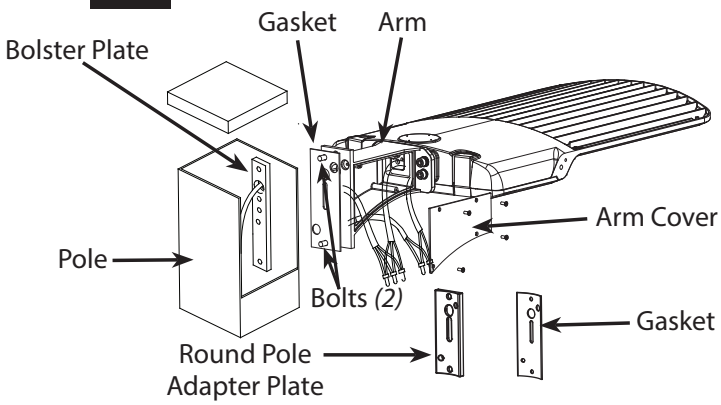

Round Pole Mount

1. Place the **Bolster Plate** inside the **Pole** as shown in Fig. 3 and 4.
2. Fix **Arm** to **Round Pole** with **Bolts**.
3. Open the **Arm Cover** and pull the wires into the **Arm**.
4. Feed supply wires from the **Pole** to connect to the **Arm**. Make appropriate wire connections per NEC *(Fig. 7)*.
5. Replace **Arm Cover** and ensure **Gasket** is in place.

FIG. 4

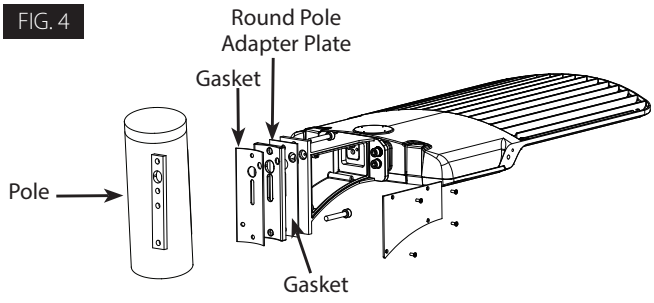

INSTRUCTIONS

A17™ FIELD-ADJUSTABLE INSTALLATION

RAB Lighting is committed to creating high-quality, affordable, well-designed and energy-efficient LED lighting and controls that make it easy for electricians to install and end users to save energy. We'd love to hear your comments. Please call the Marketing Department at 888-RAB-1000 or email: marketing@rablighting.com

SLIPFITTER MOUNT

NOTICE: Adjustable angle is 90°.

1. Place the **Slipfitter** over the **Tenon** and secure the **Fixture** with **Set Screws** on the side of the **Slipfitter** as shown in Fig. 5.
2. Feed wires from **Fixture** through **Slipfitter** and supply wires from pole. Make the necessary connections in the **Slipfitter** and knot wires for strain relief.
3. To adjust the angle of the **Slipfitter**, loosen the **Locking Bolt** and swivel **Fixture** to desired angle. The graduation of the **Slipfitter** cover plate can be used as guidelines to adjust the angle *(Fig. 6)*.
4. Tighten the **Locking Bolt** *(Fig. 6)*.

FIG. 5

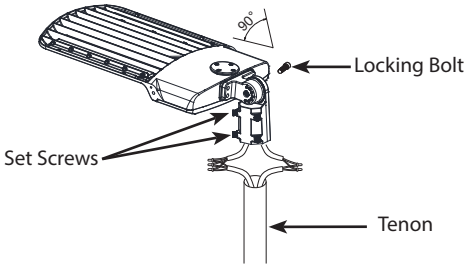

FIG. 6

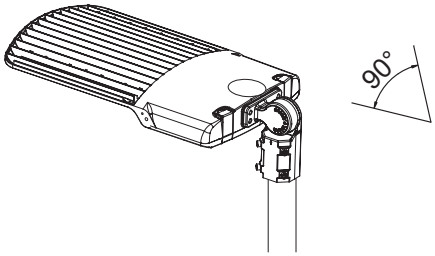

0-10V DIMMABLE WIRING

Universal voltage driver permits operation at 120V through 277V, 50 or 60 Hz. Units ordered with /480 suffix operate at 480V, 50 or 60Hz. For 0-10 dimming follow the wiring directions as shown in Fig. 7.

1. Connect the black fixture lead to the LINE supply lead.
2. Connect the white fixture lead to the COMMON supply lead.
3. Connect the green wire from fixture to supply ground. Do NOT connect the GROUND of the dimming fixture to the output.
4. Connect the purple fixture lead to the DIM V+ lead.
5. Connect the pink fixture lead to the DIM V- lead.

FIG. 7

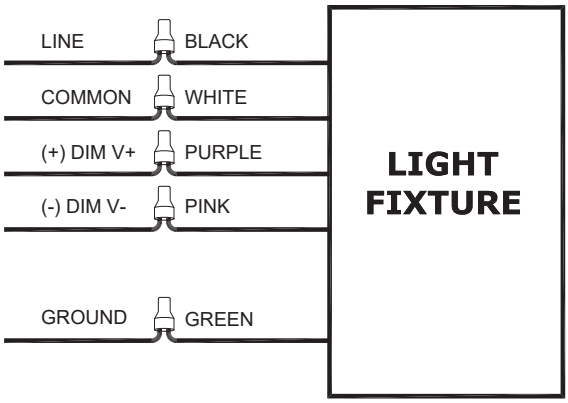

POLE DRILLING PATTERN DETAIL

The fixture can accommodate 3 different hole patterns *(Fig. 8)*. Hole **A** must be used then choose either hole **B**, **C** or **D** as needed. Template is not to scale. Use measurements shown below *(Fig. 8)*.

FIG. 8

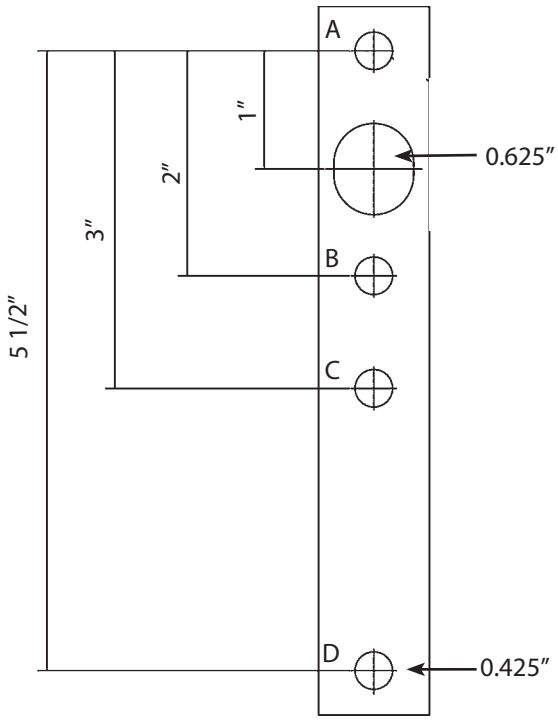

Note: *These instructions do not cover all details or variations in equipment nor do they provide for every possible situation during installation, operation or maintenance.*

INSTRUCTIONS
A17™ FIELD-ADJUSTABLE INSTALLATION

RAB Lighting is committed to creating high-quality, affordable, well-designed and energy-efficient LED lighting and controls that make it easy for electricians to install and end users to save energy. We'd love to hear your comments. Please call the Marketing Department at 888-RAB-1000 or email: marketing@rablighting.com

FIELD ADJUSTMENT

Follow instructions below to change fixture Color Temperature *(CCT)* and/or Power *(Wattage)* from the factory settings.
WARNING: Do not open or remove Respirator Plug.

Factory Settings:

A17 70/60/50W 4000K *(CCT)*, 70W *(Power)*
A17 100/80/60W 4000K *(CCT)*, 100W *(Power)*
A17 150/120/100W 4000K *(CCT)*, 150W *(Power)*
A17 200/180/160W 4000K *(CCT)*, 200W *(Power)*
A17 300/240/200W 4000K *(CCT)*, 300W *(Power)*
A17 375/300/240W 4000K *(CCT)*, 375W *(Power)*
A17 480/400/320W 4000K *(CCT)*, 480W *(Power)*

1. Unscrew **3/4" Plug** as shown in Fig. 9.
2. Adjust **Color Temperature** *(CCT)* and/or **Power** *(W)* by sliding the respective switch to the desired value as shown in Fig. 10.
3. Re-install **3/4" Plug** and tighten.

FIG. 9

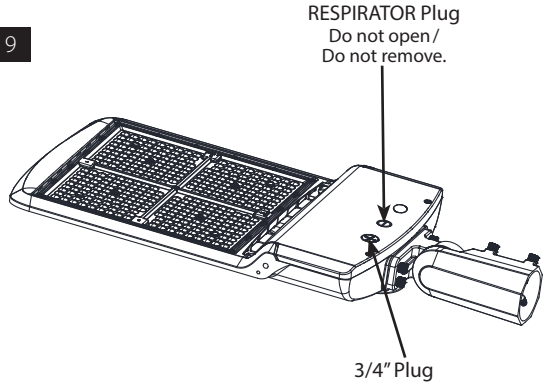

FIG. 10

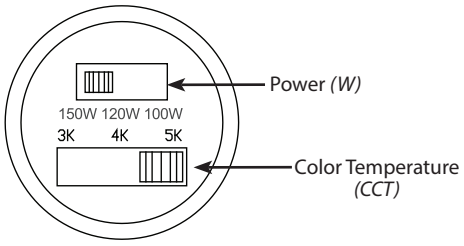

MVS MODELS

(optional remote sold separately for custom settings, CAT# MSR1).

Factory Settings:

- Brightness: 100%
- Hold Time: 20 Minutes
- Daylight: Disabled
- Sensitivity: 100%
- Stand-by dimming level: 20%
- Stand-by time: 1 Minute

TROUBLESHOOTING

1. Check that the line voltage at the fixture is correct. Refer to wiring directions.
2. Is the fixture grounded properly?

CLEANING & MAINTENANCE

CAUTION: Do not open or remove Respirator Plug as shown in Fig. 9. Be sure fixture temperature is cool enough to touch. Do not clean or maintain while fixture is energized.

1. Clean Polycarbonate lens with non-abrasive glass cleaning solution.
2. Do not open the fixture to clean the LED. Do not touch the LED.

Note: *These instructions do not cover all details or variations in equipment nor do they provide for every possible situation during installation, operation or maintenance.*

© 2024 RAB LIGHTING Inc.
A17-70-375W - IN - 0424
73712-RAB

Easy Answers

rablighting.com
Visit our website for product info

Tech Help Line
Call our experts: 888 722-1000

e-mail
Answered promptly - sales@rablighting.com

Free Lighting Layouts
Answered online or by request

RAB WARRANTY: *RAB's warranty is subject to all terms and conditions found at rablighting.com/warranty*