INSTRUCTIONS
A17™ AREA LIGHT INSTALLATION

RAB Lighting is committed to creating high-quality, affordable, well-designed and energy-efficient LED lighting and controls that make it easy for electricians to install and end users to save energy. We'd love to hear your comments. Please call the Marketing Department at 888-RAB-1000 or email: marketing@rablighting.com



A17 Universal Pole



A17 Slipfitter

IMPORTANT

READ CAREFULLY BEFORE INSTALLING FIXTURE. RETAIN THESE INSTRUCTIONS FOR FUTURE REFERENCE.
RAB fixtures must be wired in accordance with the National Electrical Code and all applicable local codes. Proper grounding is required for safety. THIS PRODUCT MUST BE INSTALLED IN ACCORDANCE WITH THE APPLICABLE INSTALLATION CODE BY A PERSON FAMILIAR WITH THE CONSTRUCTION AND OPERATION OF THE PRODUCT AND THE HAZARDS INVOLVED.
WARNING: Make certain power is OFF before installing or maintaining fixture. No user serviceable parts inside.
WARNING: Do not use an electric generator to test LED fixtures.
WARNING: Min 75°C SUPPLY CONDUCTORS.
Suitable for wet locations.

MOUNTING THE UNIVERSAL ARM ON THE FIXTURE

1. Remove the **Arm Cover** from the **Arm** by loosening **Arm Cover Screws** as shown in Fig. 1.
2. Feed wires from fixture into **Arm**.
3. Line up **Arm** and fixture. Tighten screws inside the **Arm** and tighten securely to housing.
4. Replace the **Arm Cover** and secure with **Screws** as shown in Fig. 2.

Note: See Pole Drilling Pattern Detail *(Fig. 8)*.

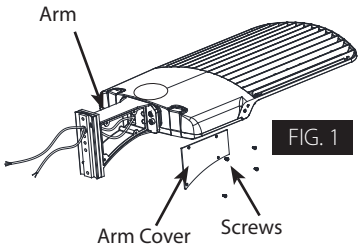

FIG. 1

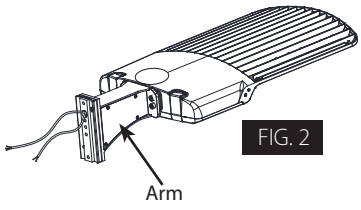

FIG. 2

Square Pole Mount

1. Place the **Bolster Plate** inside the **Pole** as shown in Fig. 3.
2. Remove the **Round Pole Adaptor Plate**.
3. Fix **Arm** to **Square Pole** with **Bolt**.
4. Open the **Arm Cover** and pull the wires into the junction box.
5. Feed supply wires from the **Pole** to connect to the **Arm**. Make appropriate wire connections per NEC in an approved enclosure *(Fig. 7)*.
6. Use bolts to tighten to the **Pole**.

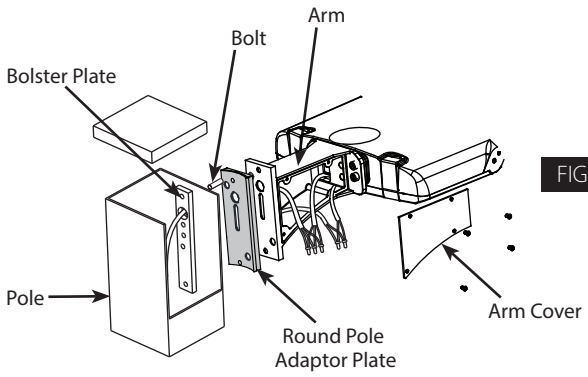

FIG. 3

Round Pole Mount

1. Place the **Bolster Plate** inside the **Pole** as shown in Fig. 3.
2. Fix **Arm** to **Round Pole** with **Bolt**.
3. Open the **Arm Cover** and pull the wires into the junction box.
4. Feed supply wires from the **Pole** to connect to the **Arm**. Make appropriate wire connections per NEC in an approved enclosure *(Fig. 7)*.
5. Use bolts to tighten to the **Pole**.

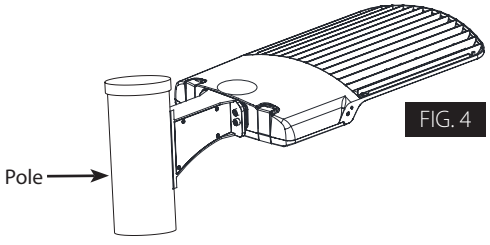

FIG. 4

INSTRUCTIONS
A17™ AREA LIGHT INSTALLATION

RAB Lighting is committed to creating high-quality, affordable, well-designed and energy-efficient LED lighting and controls that make it easy for electricians to install and end users to save energy. We'd love to hear your comments. Please call the Marketing Department at 888-RAB-1000 or email: marketing@rablighting.com

SLIPFITTER MOUNT

NOTICE: Adjustable angle is 90°.

1. Place the **Slipfitter** over the **Tenon** and secure the **Fixture** with set **Screws** on the side of the **Slipfitter** as shown in Fig. 5.
2. Feed wires from **Fixture** through **Slipfitter** and supply wires from pole. Make the necessary connections in the **Slipfitter** and knot wires for strain relief.
3. To adjust the angle of the **Slipfitter**, loosen the **Locking Bolt** and swivel **Fixture** to desired angle. The graduation of the **Slipfitter** cover plate can be used as guidelines to adjust the angle.

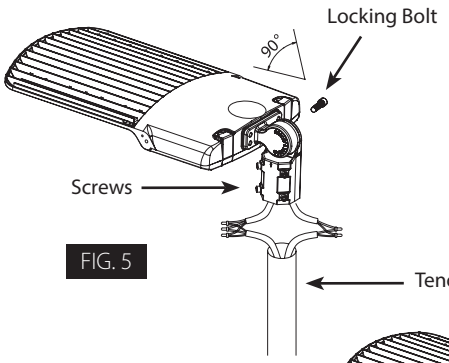

FIG. 5

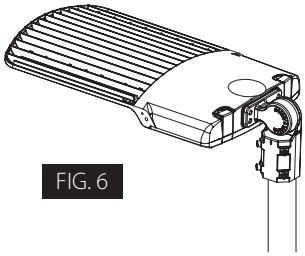
FIG. 6

0-10V DIMMABLE WIRING

Universal voltage driver permits operation at 120V through 277V, 50 or 60 Hz. Units ordered with /480 suffix operate at 480V, 50 or 60Hz. For 0-10 dimming follow the wiring directions as shown in Fig. 7.

1. Connect the black/brown fixture lead to the LINE supply lead.
2. Connect the white/blue fixture lead to the COMMON supply lead.
3. Connect the green/yellow wire from fixture to supply ground. Do NOT connect the GROUND of the dimming fixture to the output.
4. Connect the purple fixture lead to the DIM V+ lead.
5. Connect the pink fixture lead to the DIM V- lead.

FIG. 7

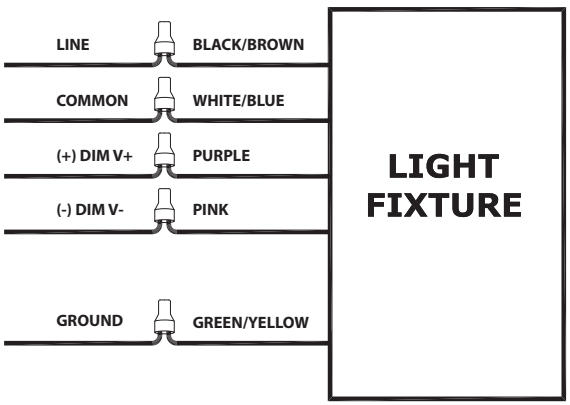

POLE DRILLING PATTERN DETAIL

The fixture can accommodate 3 different hole patterns *(Fig. 8)*. Hole **A** must be used then choose either hole **B**, **C** or **D** as needed. Template is not to scale. Please use measurements shown.

FIG. 8

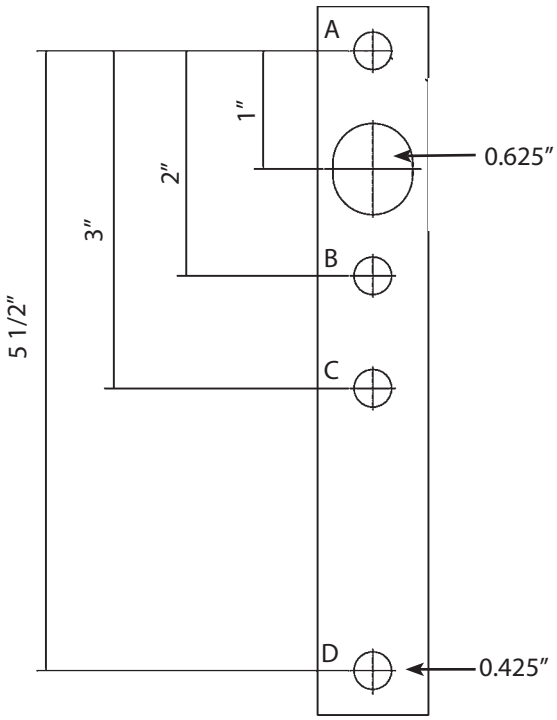

Note: *These instructions do not cover all details or variations in equipment nor do they provide for every possible situation during installation, operation or maintenance.*

INSTRUCTIONS
A17™ AREA LIGHT INSTALLATION

RAB Lighting is committed to creating high-quality, affordable, well-designed and energy-efficient LED lighting and controls that make it easy for electricians to install and end users to save energy. We'd love to hear your comments. Please call the Marketing Department at 888-RAB-1000 or email: marketing@rablighting.com

CLEANING & MAINTENANCE

CAUTION: Do not open or remove Respirator Plug as shown in Fig. 9. Be sure fixture temperature is cool enough to touch. Do not clean or maintain while fixture is energized.

1. Clean Polycarbonate lens with non-abrasive glass cleaning solution.
2. Do not open the fixture to clean the LED. Do not touch the LED.

FIG. 9

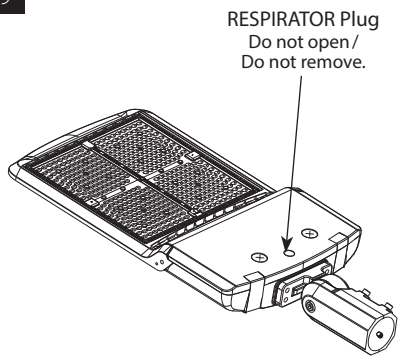

TROUBLESHOOTING

1. Check that the line voltage at the fixture is correct. Refer to wiring directions.
2. Is the fixture grounded properly?

© 2021 RAB LIGHTING Inc.
A17-70-375W - IN - 1022
73712-RAB

Easy Answers

rablighting.com
Visit our website for product info

Tech Help Line
Call our experts: 888 722-1000

e-mail
Answered promptly - sales@rablighting.com

Free Lighting Layouts
Answered online or by request

RAB WARRANTY: *RAB's warranty is subject to all terms and conditions found at rablighting.com/warranty*

Microwave Motion Sensor



MVS-OD SENSOR



OPTIONAL REMOTE
Not Included (Order REMOTE-OD)

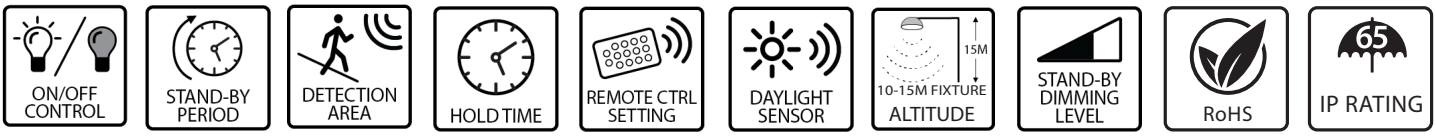

PERFORMANCE

Operating voltage	12 ± 2V DC
Operating current	30mA
Output	DIM 0-10V
Stand-by power	<0.5W
Brightness	70%/80%/90%/100%
Detection area	20%/50%/75%/100%
Hold time	10s/1min/10min/30min
Daylight threshold	10Lux/30Lux/50Lux/100Lux/Disable
Stand-by period	1min/30min/60min/+∞
Stand-by dimming level	10%/20%/30%/50%
Microwave frequency	5.8GHz ± 75MHz
Microwave power	<0.5mW
Detection angle	30-150°
Control line	Black/White:12V+ ; Purple: DIM+ ; Pink: 12V-/DIM-
Mounting height	Max 15M (ceiling mounted)
Detection range	Max Ø15m (ceiling mounted) Max 20m(wall mounted)
Operating temperature	-25°C~+60°C
IP rating	IP65

Microwave Motion Sensor

MVS SENSOR FACTORY SETTINGS

BRIGHTNESS	100%
HOLD TIME	1 Minute
DAYLIGHT	Disabled
SENSITIVITY	50%
STAND-BY DIMMING LEVEL	20%
STAND-BY TIME	1 Minute

DIMENSIONS

Weight: 0.14lb

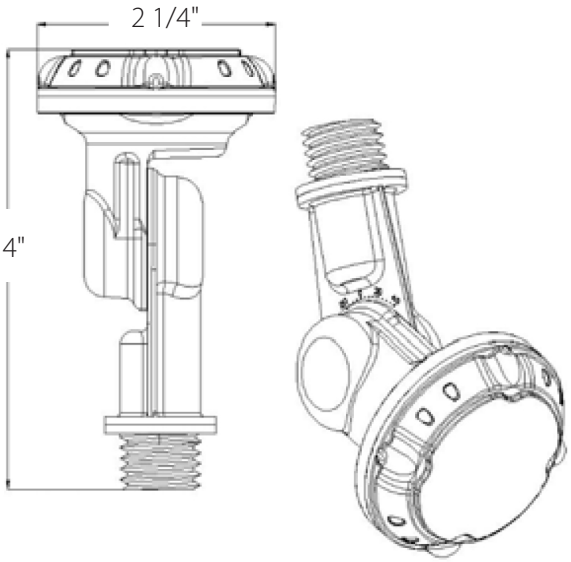

WIRING DIAGRAM

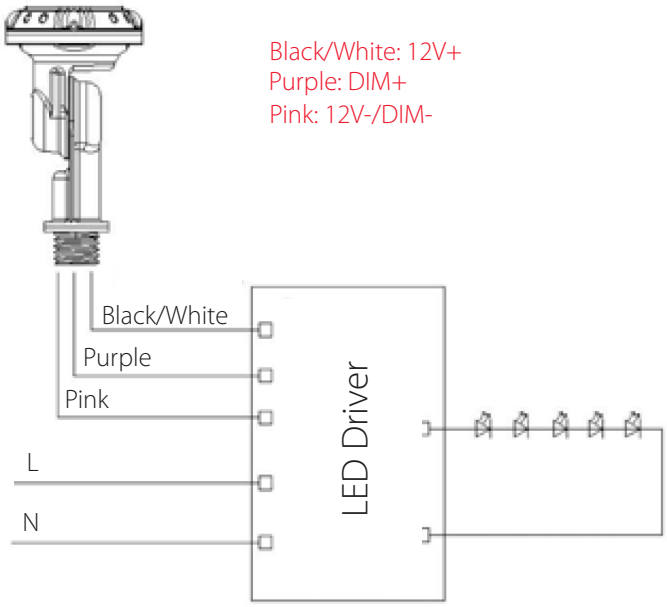

DETECTION COVERAGE

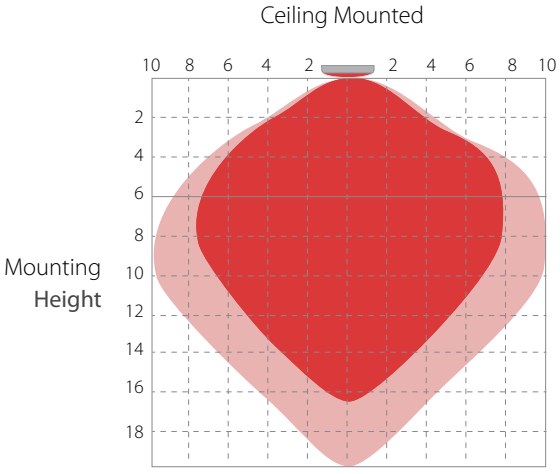

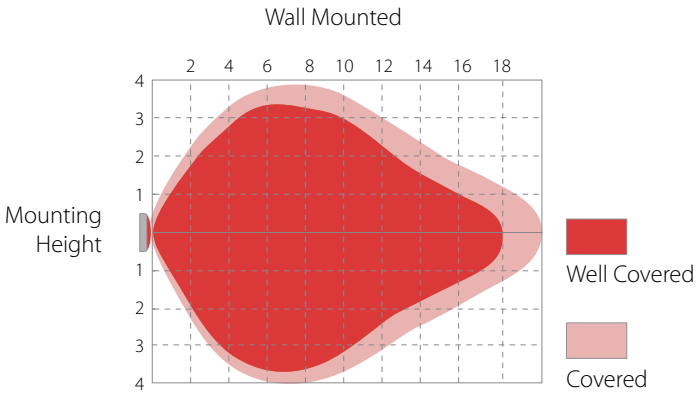

Microwave Motion Sensor

LUX ON-OFF

Sensor automatically turns off light when ambient brightness exceeds preset lux level. Following preconditions apply to use the Lux On-Off function:

- Stand-by period : +∞
- Stand-by dimming level : 10%, 20%, 30% or 50%
- Daylight threshold : 10Lux, 30Lux, 50Lux or 100Lux

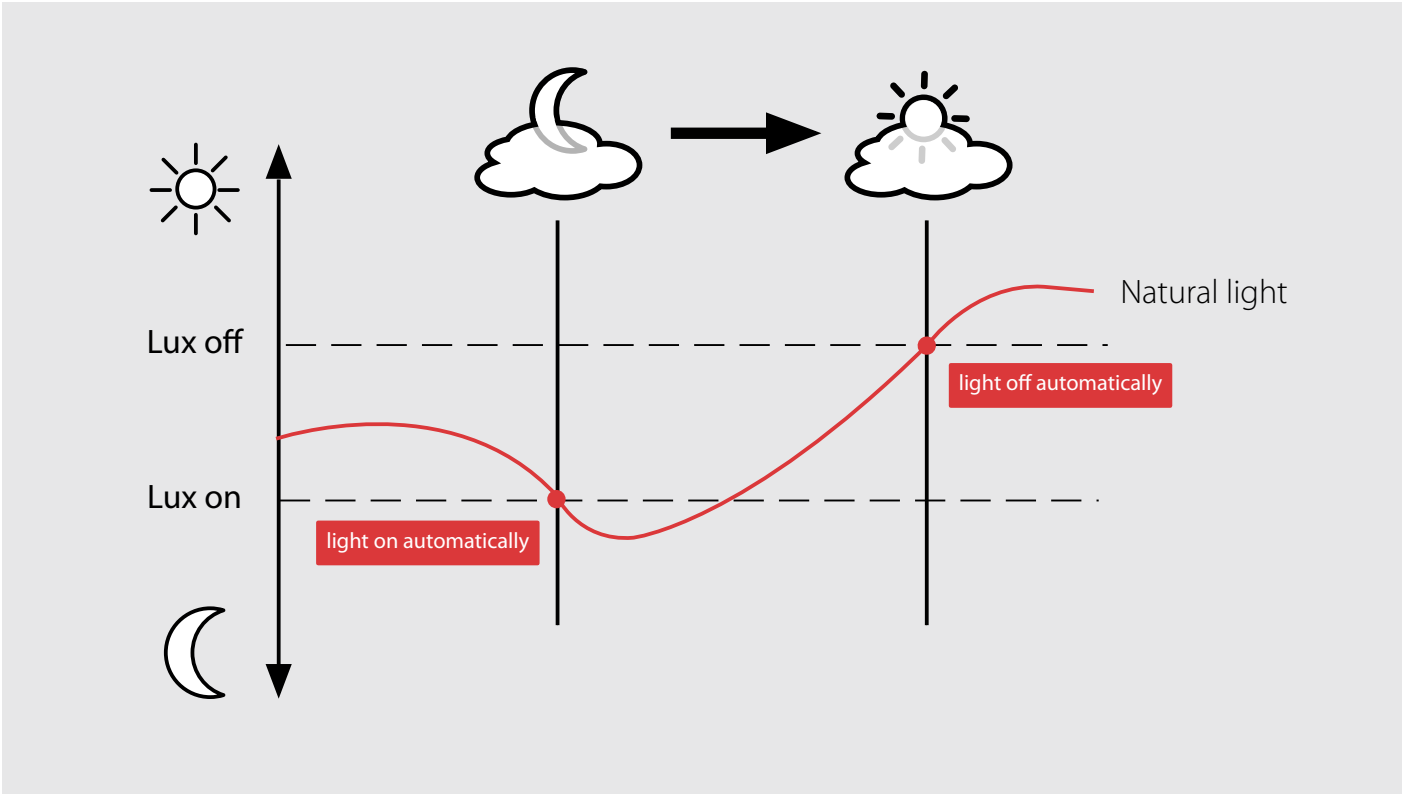

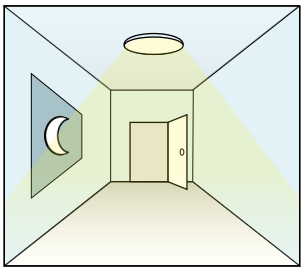

When ambient brightness is lower than preset lux level, light automatically turns on

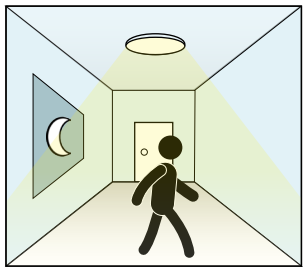

When motion detected while ambient brightness is insufficient, light DIMs 100%

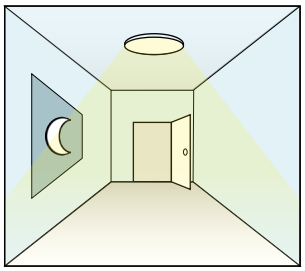

Light dims to stand-by level when there is no motion detection after hold time

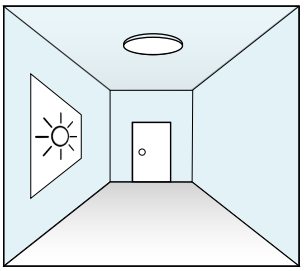

When ambient brightness is higher than preset lux level, light automatically turns off

INSTRUCTIONS
REMOTE-OD

RAB Lighting is committed to creating high-quality, affordable, well-designed and energy-efficient LED lighting and controls that make it easy for electricians to install and end users to save energy. We'd love to hear your comments. Please call the Marketing Department at 888-RAB-1000 or email: marketing@rablighting.com



REMOTE-OD

Remote Display Area

BRIGHTNESS (70%/80%/90%/**100%**)
DAYLIGHT (10lx/30lx/50l/100lx)
STANDBY DIM (10%/20%/30%/50%)
HOLD TIME (10S/1min/10min/30min)
SENSITIVITY (20%/50%/75%/100%)
STANDBY TIME (+ ∞/1min/30min/60min)

Button Setting Area

ON/OFF (Long press the "ON/OFF" button until the brightness indicator light is on (First-row). Press to turn on or turn off the fixture.)

BRIGHTNESS (Press to adjust dimming level 70%/80%/90%/100%. pre-set)
Note: MVS Sensor Brightness factory setting is 100%.

SEND (Press to save settings after each change. The indicator light confirms the save setting.)

HOLD TIME (Press to ajust hold time 10s/1min/10min/30min.)
Note: MVS Sensor factory setting hold time is 1 minute.

DAYLIGHT (Long press the button until the daylight indicator light is on. Press to adjust daylight threshold 10lx/30lx/50lx/100lx.) ***Note: MVS Sensor daylight threshhold factory setting is disabled.***

SENSITIVITY (Press to adjust sensitivity 20%/50%/75%/100%.)
Note: MVS Sensor sensitivity factory setting is 50%.

STANDBY DIM (Press to adjust stand-by dimming level 10%/20%/30%/50%.)
Note: MVS Sensor standby dimming level factory setting is 20%

STANDBY TIME (Press Standby Dim to adjust time + ∞ / 1min, 30min, 60min).
Note: With Daylight activated , choose:

- Unlimited stand-by time (+ ∞): Default mode: light control, turn on/off: choices: 10/50 lux, 30/100 lux 100/200 lux; or
- Light threshold mode choices: 10 lux, 30 lux, 100 lux (if light level is ≤ preset lux and motion is detected, light will turn on at present lux).
  note: MVS Sensor standby dimming level factory setting is 1 minute.

RESET (Press "RESET" button, products with DIP switch will be controlled by DIP switches; Otherwise all the setting will change is Brightness 70%/ Hold time 10s/Sensitivity 20%/ Daylight threshold disable/ Stand-by dimmer level 10%/ Stand-by time + ∞ .

TEST The button "TEST" is for testing purpose after debugging. Pressing this button, the sensor goes to test mode (hold time is only 3s).

Press to increase the brightness (0%-100%).

Press to reduce the brightness (100%-0%).

PROGRAMMING GUIDELINES

1. If you want to send a setting, it will only work if the remote control is on. If you do not press any button within 10 seconds, the indicator light will go out.
2. When using "ON/OFF" button, the rest of the buttons except the "ON/OFF", "BRIGHTNESS" and "SEND" buttons will be disabled.
3. When using "TEST" button, the rest of the buttons except the "TEST", "SENSITIVITY" and "SEND" button will be disabled.
4. Every change requires you to press the "SEND" button to save.
5. Because of the power supply DIMMING ratio difference, when using different power, "BRIGHTNESS" and "STANDBY DIM" adjust percentage of the power will have difference with the measured power.

© 2022 RAB LIGHTING Inc.

Easy Answers

rablighting.com
Visit our website for product info

Tech Help Line
Call our experts: 888 722-1000

e-mail
Answered promptly - sales@rablighting.com

Free Lighting Layouts
Answered online or by request

REMOTE-OD
REMOTE CONTROL - IN - 0322
73724-RAB