# A22-2T200B/480



Color: Black

Weight: 13.0 lbs

| | |
|---|---|
| **Project:** | **Type:** |
| **Prepared By:** | **Date:** |

### Driver Info

| | |
|---|---|
| Type | Constant |
| 120V | N/A |
| 208V | N/A |
| 240V | N/A |
| 277V | N/A |
| Input Watts | 160.8-200.8W |

### LED Info

| | |
|---|---|
| Watts | 200/180/160W |
| Color Temp | 3000K/4000K/5000K |
| Color Accuracy | 80-84 CRI |
| L70 Lifespan | 100,000 Hours |
| Lumens | 22,704-28,908 lm |
| Efficacy | 129.4-155.9 lm/W |

## Technical Specifications

### Field Adjustability

**Field Adjustable:**
Field Adjustable Light Output:
200W/180W/160W (factory default: 200W)
Color Temperature Selectable:
3000K, 4000K and 5000K (factory default:4000K)

### Compliance

**UL Listed:**
Suitable for wet locations. Suitable for mounting within 4ft (1.2m) of the ground.

**IESNA LM-79 & LM-80 Testing:**
RAB LED luminaires and LED components have been tested by an independent laboratory in accordance with IESNA LM-79 and LM-80.

**IP Rating:**
Ingress protection rating of IP66 for dust and water

**DLC Listed:**
This product is listed by Design Lights Consortium (DLC) as an ultra-efficient premium product that qualifies for the highest tier of rebates from DLC Member Utilities. Designed to meet DLC 5.1 requirements.
DLC Product Code: S-YXDM0K

### Performance

**Lifespan:**
100,000-Hour LED lifespan based on IES LM-80 results and TM-21 calculations

**Wattage Equivalency:**
200W: Replaces up to 750W Metal Halide (MH) or 400W High Pressure Sodium (HPS)
180W: Replaces up to 750W Metal Halide (MH) or 400W High Pressure Sodium (HPS)
160W: Replaces up to 750W Metal Halide (MH) or 400W High Pressure Sodium (HPS)

### Electrical

**Driver:**
Constant Current, Class 1, 480V, 50/60 Hz:
200W: 480V: 0.42A
180W: 480V: 0.38A
100W: 480V: 0.33A

**Dimming Driver:**
Driver includes dimming control wiring for 0-10V dimming systems. Requires separate 0-10V DC dimming circuit. Dims down to 10%.

**THD:**
11.82% at 480V

**Power Factor:**
94% at 480V

**7-Pin Receptacle with Shorting Cap:**
ANSI C136.41 7-pin receptacle, compatible with wireless control systems

**Surge Protection:**
6kV

### Construction

**IES Classification:**
The Type II distribution is ideal for wide walkways, on ramps and entrance roadways, bike paths and other long and narrow lighting applications. This type is meant for lighting larger areas and usually is located near the roadside. This type of lighting is commonly found on smaller side streets or jogging paths.

**Cold Weather Starting:**
The minimum starting temperature is -40°C (-40°F)

**Maximum Ambient Temperature:**
Suitable for use in up to 40°C (104°F)

**Lens:**
Polycarbonate lens

**Housing:**
Die-cast aluminum


Copyright © 2024 RAB Lighting All Rights Reserved Note: Specifications are subject to change at any time without notice

## Technical Specifications (continued)

**Effective Projected Area:**
1 Fixture: 0.3
2 Fixtures: 0.7
3 Fixtures: 1.2
4 Fixtures: 1.2

**Mounting:**
Adjustable universal pole mount (standard).
Slipfitter and wall mount accessory available.

**Finish:**
Formulated for high durability and long-lasting color

**Gaskets:**
High-temperature silicone gaskets

**Green Technology:**
Mercury and UV free. RoHS-compliant components.

### LED Characteristics

**LEDs:**
Long-life, high-efficacy, surface-mount LEDs

**Color Uniformity:**
RAB's range of Correlated Color Temperature follows the guidelines of the American National Standard for Specifications for the Chromaticity of Solid State Lighting (SSL) Products, ANSI C78.377-2017.

### Optical

**BUG Rating:**
Type 2
200W: B3 U0 G3
180W: B3 U0 G3
160W: B3 U0 G3

### Other

**5 Yr Limited Warranty:**
The RAB 5-year, limited warranty covers light output, driver performance and paint finish. RAB's warranty is subject to all terms and conditions found at rablighting.com/warranty.

**Buy American Act Compliance:**
RAB values USA manufacturing! Upon request, RAB may be able to manufacture this product to be compliant with the Buy American Act (BAA). Please contact customer service to request a quote for the product to be made BAA compliant.


Copyright © 2024 RAB Lighting All Rights Reserved Note: Specifications are subject to change at any time without notice

# A22-2T200B/480

## Dimensions

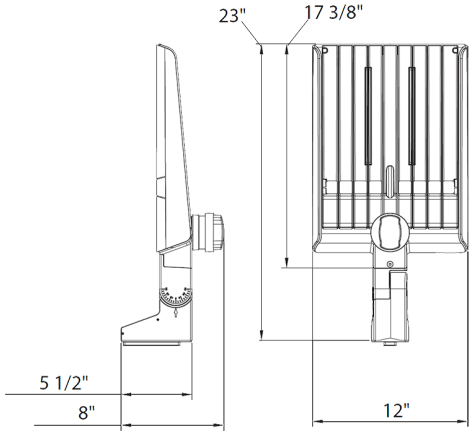


## Features

- DLC Premium listed
- Adjustable Universal Pole Mount
- 7-Pin Receptacle with Shorting Cap
- IP66 Rated
- 100,000-Hour LED lifespan
- 5-Year, limited warranty

## Ordering Matrix

| Family | | Optics | Wattages | Mounting | Color Temp | Finish | Voltage | Options |
|---|---|---|---|---|---|---|---|---|
| A22 | – | 2T | 200 | | | B | /480 | |
| | | **2T =** Type II<br>**4T =** Type IV<br>**5T =** Type V<br>**Blank =** Type III | **70 =** 70/60/50W<br>**100 =** 100/80/60W<br>**150 =** 150/120/100W<br>**200 =** 200/180/160W<br>**320 =** 320/280/250W | **Blank =** Universal Adjustable Pole Mount | **Blank =** 3000K/4000K/5000K CCT Adjustable | **Blank =** Bronze<br>**W =** White<br>**B =** Black | **Blank =** 120-277V, 0-10V Dimming<br>**/480 =** 480V, 0-10V Dimming | **Blank =** 7-Pin Receptacle with Shorting Cap<br>**/MVS =** 7-Pin Receptacle with Shorting Cap and Microwave Motion Sensor<br>**/LCBS =** Lightcloud Blue Enabled w/PIR Sensor<br>**/LCBS/MVS =** Lightcloud Blue Enabled w/MVS Sensor |


Copyright © 2024 RAB Lighting All Rights Reserved Note: Specifications are subject to change at any time without notice