INSTRUCTIONS
FIELD-ADJUSTABLE A22™ INSTALLATION

RAB Lighting is committed to creating high-quality, affordable, well-designed and energy-efficient LED lighting and controls that make it easy for electricians to install and end users to save energy. We'd love to hear your comments. Please call the Marketing Department at 888-RAB-1000 or email: marketing@rablighting.com



70 &100



150, 150X & 200



320

IMPORTANT

READ CAREFULLY BEFORE INSTALLING FIXTURE. RETAIN THESE INSTRUCTIONS FOR FUTURE REFERENCE.
RAB fixtures must be wired in accordance with the National Electrical Code and all applicable local codes. Proper grounding is required for safety. THIS PRODUCT MUST BE INSTALLED IN ACCORDANCE WITH THE APPLICABLE INSTALLATION CODE BY A PERSON FAMILIAR WITH THE CONSTRUCTION AND OPERATION OF THE PRODUCT AND THE HAZARDS INVOLVED.
WARNING: Make certain power is OFF before installing or maintaining fixture. No user serviceable parts inside.
CAUTION: For proper weatherproof function all gaskets must be seated properly and all screws inserted and tightened firmly. Apply weatherproof silicone sealant around the edge of the junction box. This is especially important with an uneven surface. Silicone all plugs and unused conduit entries.

POLE MOUNT-ADJUSTABLE UNIVERSAL ARM

1. Place the **Bolster Plate** *(provided)* inside a **Square** or **Round Pole** as shown in Fig. 1, secure the **Arm** to the pole with *(2)* **Bolts** to the **Bolster Plate**.
2. Open the **Arm Cover** *(Fig. 2)* and feed the fixture and supply wires into the **Arm Wiring Compartment** to make the wire connections as per wiring diagram *(Fig. 15)*. Make appropriate wire connections as per NEC.
3. To adjust fixture angle, loosen the **Locking Bolt** as shown in Fig. 2. Swivel fixture to desired angle and tighten **Locking Bolt.**
4. The graduation of the **Adjustable Arm Cover Plate** can be used for guidelines to adjust the fixture angle *(Fig. 3 and 4)*. Maximum tilt is ± 60°.

Fig: 1

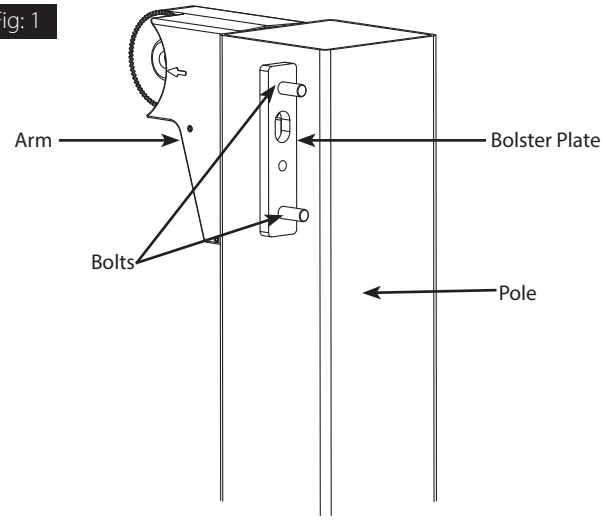

Fig: 2

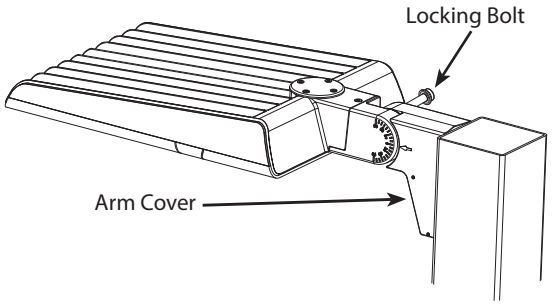

Fig: 3

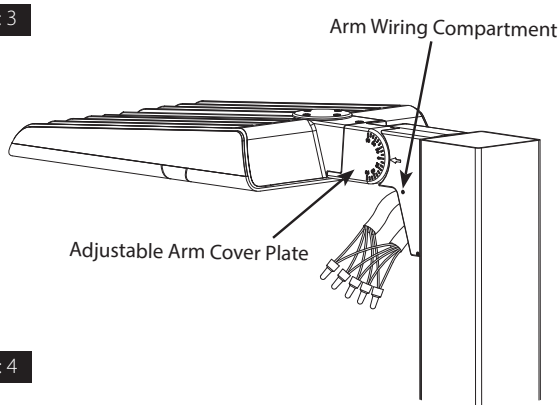

Fig: 4

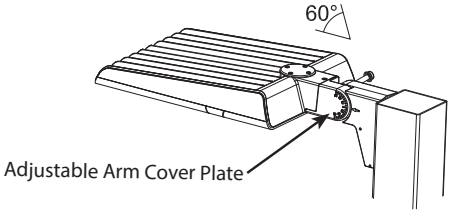

INSTRUCTIONS
FIELD-ADJUSTABLE A22™ INSTALLATION

RAB Lighting is committed to creating high-quality, affordable, well-designed and energy-efficient LED lighting and controls that make it easy for electricians to install and end users to save energy. We'd love to hear your comments. Please call the Marketing Department at 888-RAB-1000 or email: marketing@rablighting.com

SLIPFITTER MOUNT

(Accessory ordered separately - Model # A22SF, A22SFW, A22SFB)

WARNING: RISK OF SERIOUS INJURY OR DEATH!
DO NOT MOUNT THE SLIPFITTER TO A TENON OR BRACKET THAT IS MORE THAN 20 DEGREES FROM VERTICAL. MOUNTING ANY ANGLE OTHER THAN 0-20 DEGREES INCREASES THE RISK OF DISENGAGEMENT AND/OR FAILURE OF THE SLIPFITTER. INSTALL THE POLE ON A SECURE BASE OR INSTALL THE BRACKET TO A WALL FIRST. THEN PLACE LUMINAIRE ONTO THE POLE OR BRACKET. DO NOT LIFT ASSEMBLED LUMINAIRE OR POLE OR LUMINAIRE & BRACKET. LUMINAIRE OR POLE/BRACKET MAY DISENGAGE.

1. Remove **Adjustable Universal Arm** by removing the fixture **Securing Screw** as shown in Fig. 5.
2. Separate the **Slipfitter** assembly by removing the **Swivel Bolt** as shown in Fig. 6 and feed wires from fixture through **Slipfitter.** Re-install S**wivel Bolt**.
3. Reconnect the **Swivel Bolt**. Make the necessary connections as per NEC *(Fig. 15*.
4. The **Slipfitter** fits a 2 3/8" O.D. **Tenon**. Place the **Slipfitter** over the **Tenon** and secure the fixture with*(4)* **Set Screws** on the side of the **Slipfitter** as shown in Fig. 7.
5. To adjust fixture angle of the **Slipfitter**, loosen the **Swivel Bolt** and swivel the fixture to the desired angle. The graduation of the **Slipfitter Cover Plate** can be used for guidelines to adjust the angle.

Fig: 6

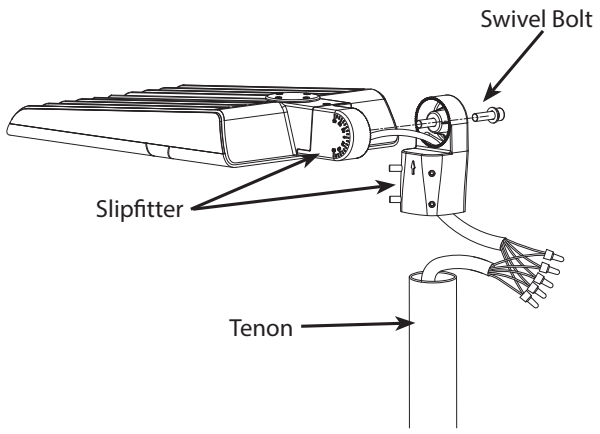

Fig: 7

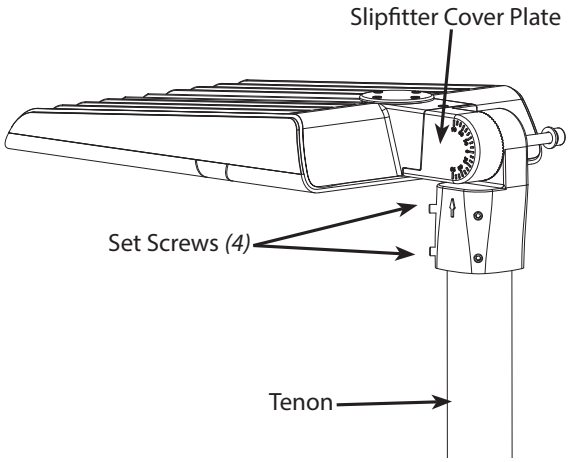

Fig: 45

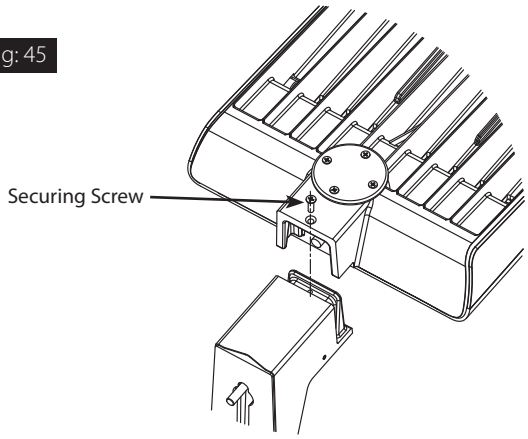

INSTRUCTIONS
FIELD-ADJUSTABLE A22™ INSTALLATION

RAB Lighting is committed to creating high-quality, affordable, well-designed and energy-efficient LED lighting and controls that make it easy for electricians to install and end users to save energy. We'd love to hear your comments. Please call the Marketing Department at 888-RAB-1000 or email: marketing@rablighting.com

WALL MOUNT

(Accessory ordered separately - Model # A22WM, A22WMW, A22WMB)

1. Remove **Adjustable Universal Arm** by removing the fixture **Securing Screw** as shown in Fig. 4.
2. Separate the **Wall Mount Cover** from the **Wall Mount Box** *(Fig. 8)*.
3. Orient **Wall Mount Box** so that the **"UP" Arrow** is facing up as shown in Fig. 9.
4. Secure the **Wall Mount Box** to a sturdy surface. Use appropriate hardware for the mounting surface *(by others)*.
5. Apply weatherproof silicone sealant around the edge of the mounting box and/or junction box. This is especially important with an uneven surface.
6. Secure the **Wall Mount Cover** to the fixture with **Securing Screw**.
7. Bring fixture up to the **Wall Mount Box** and slide the **Tether Cable** from inside the **Wall Mount Cover** into the **Keyhole Slot** *(Fig. 7 and 8)* for hands free wiring.
8. Feed supply wires through **Wall Mount Box** and wire the fixture using suitable wire connectors as per NEC *(Fig. 15)*.
9. Secure the w**Wall Mount Box** to the **Wall Mount Cover** using *(4)* **Set Screws** *(provided)* as shown in Fig. 10.

Fig: 8

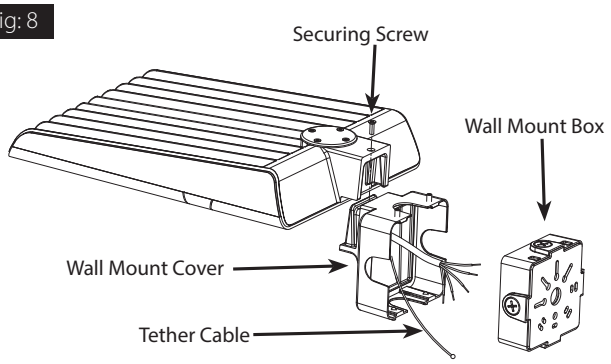

Fig: 9

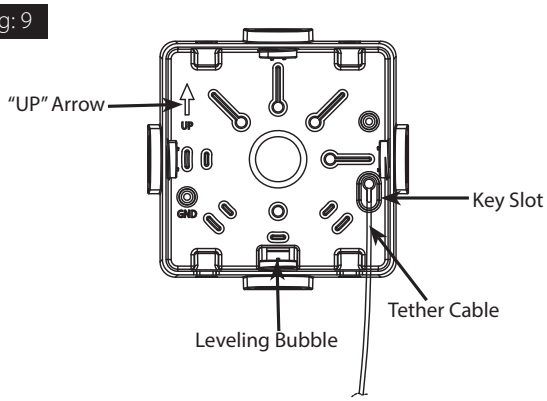

Fig: 10

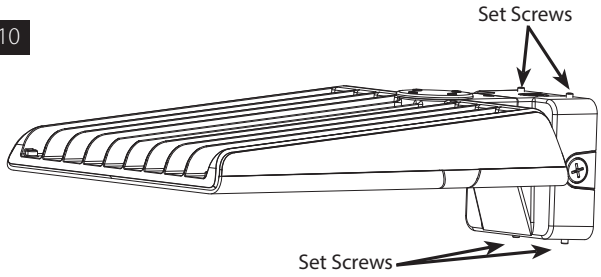

FIELD ADJUSTMENT

Follow instructions below to change the fixture **Color Temperature** *(CCT)* and/or **Power** *(W)* from the factory settings:

Factory Settings:	A22-70/60/50W	70W / 4000K
	A22-100/80/60W	100W / 4000K
	A22-150/120/100W	150W / 4000K
	A22-150X/120/100W	150W / 4000K
	A22-200/180/160W	200W / 4000K
	A22-320/280/250W	320W / 4000K

1. Locate the **Selector Switches** on fixture housing as shown in Fig. 11 and remove **Plug**.
2. Select **Color Temperature** *(CCT)* and/or **Power** *(W)* by sliding the respective switch to the desired value *(Fig. 12)*.
3. After the switches are positioned to the desired setting replace **Plug**.

Fig: 11

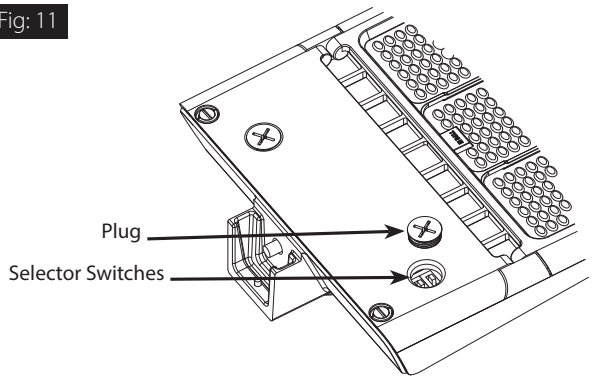

Fig: 12

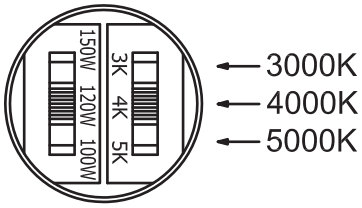

INSTRUCTIONS
FIELD-ADJUSTABLE A22™ INSTALLATION

RAB Lighting is committed to creating high-quality, affordable, well-designed and energy-efficient LED lighting and controls that make it easy for electricians to install and end users to save energy. We'd love to hear your comments. Please call the Marketing Department at 888-RAB-1000 or email: marketing@rablighting.com

LENS ACCESSORY

LENS accessories are sold separately.
(A22-150X (ONLY) includes TYPE III LENS installed, Type IV and Type V LENS included with fixture).

1. Loosen **Captive Screws** *(2)* to open fixture **Door Frame** as shown in Fig.13 and 14, remove pre-installed **Lens** and **Silicone Gasket** (*do not discard Gasket).*
2. Insert new **Lens** and **Silicone Gasket**, ensure that the **Lens** and **Silicone Gasket** are positioned correctly. Close fixture **Door Frame** and secure with **Captive Screws**.

Fig: 13

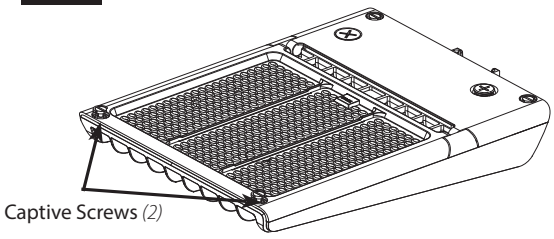

Fig: 14

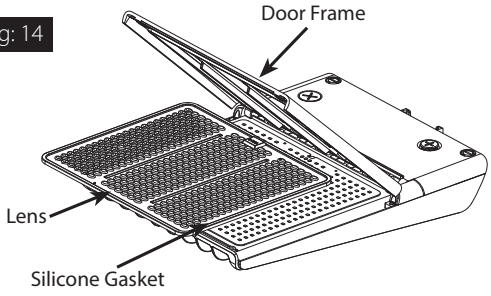

MVS MODELS

(optional remote sold separately for custom settings, CAT# MSR1).

Factory Settings:

- Brightness: 100%
- Hold Time: 1 Minute
- Daylight: Disabled
- Sensitivity: 100%
- Stand-by dimming level: 20%
- Stand-by time: 1 Minute

0-10V DIMMABLE WIRING

Universal voltage driver permits operation at 120V through 277V, 50 or 60 Hz. Units ordered with /480 suffix are 480V **ONLY**. For 0-10V dimming follow the wiring directions shown below (*Fig. 15*).

1. Connect the black fixture lead to the LINE supply lead.
2. Connect the white fixture lead to the COMMON supply lead.
3. Connect the GROUND wire from fixture to supply ground. Do NOT connect the GROUND of the dimming fixture to the output.
4. Connect the purple fixture lead to the (V+) DIM lead.
5. Connect the pink fixture lead to the (V-) DIM lead.
6. Cap the yellow fixture lead, if present. Do NOT connect.

Fig: 15

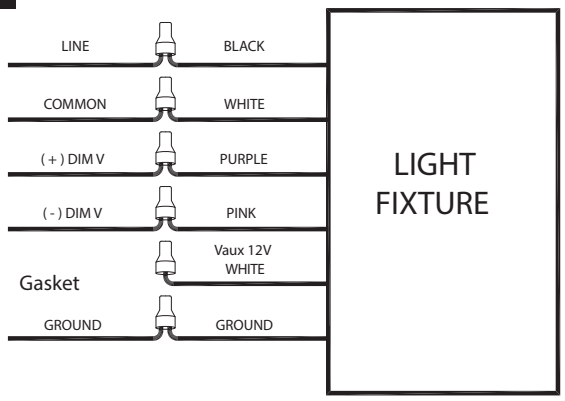

CLEANING & MAINTENANCE

CAUTION: Be sure fixture temperature is cool enough to touch. Do not clean or maintain while fixture is energized.

1. Clean lens with non-abrasive glass cleaning solution.
2. Do not open the fixture to clean the LED. Do not touch the LED.

TROUBLESHOOTING

1. Check that the line voltage at the fixture is correct. Refer to wiring directions.
2. Is the fixture grounded properly?
3. Is the photocell, if used, functioning properly?

Note: *These instructions do not cover all details or variations in equipment nor do they provide for every possible situation during installation, operation or maintenance.*

© 2024 RAB LIGHTING Inc.

Easy Answers

rablighting.com	Tech Help Line	e-mail	Free Lighting Layouts
Visit our website for product info	Call our experts: 888 722-1000	Answered promptly - sales@rablighting.com	Answered online or by request

A22 - IN - 1224
P-100733

RAB WARRANTY: *RAB's warranty is subject to all terms and conditions found at rablighting.com/warranty.*