INSTRUCTIONS
ANGSEAL INSTALLATION

RAB Lighting is committed to creating high-quality, affordable, well-designed and energy-efficient LED lighting and controls that make it easy for electricians to install and end users to save energy. We'd love to hear your comments. Please call the Marketing Department at 888-RAB-1000 or email: marketing@rablighting.com

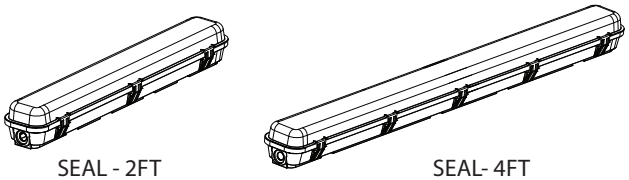

SEAL - 2FT SEAL- 4FT

IMPORTANT

READ CAREFULLY BEFORE INSTALLING FIXTURE. RETAIN THESE INSTRUCTIONS FOR FUTURE REFERENCE.
RAB fixtures must be wired in accordance with the National Electrical Code and all applicable local codes. Proper grounding is required for safety. THIS PRODUCT MUST BE INSTALLED IN ACCORDANCE WITH THE APPLICABLE INSTALLATION CODE BY A PERSON FAMILIAR WITH THE CONSTRUCTION AND OPERATION OF THE PRODUCT AND THE HAZARDS INVOLVED.
WARNING: Make certain power is OFF before installing or maintaining fixture. No user serviceable parts inside.
CAUTION: For proper weatherproof function all gaskets must be seated properly and all screws inserted and tightened firmly. Apply weatherproof silicone sealant around the edge of the housing. This is especially important with an uneven ceiling surface. Silicone all plugs and unused conduit entries, and USE SEAL WITH CONDUIT ONLY.
FOLLOW ALL SEAL® *(sold separately)* INSTALLATION INSTRUCTIONS.

INSTALLATION

1. Use appropriate mounting hardware *(not provided)* to secure the **ANGSEAL Brackets** *(2)* to the mounting surface as shown in Fig 1. **ANGSEAL Brackets** must face towards each other. Recommended **ANGSEAL Bracket** distance center to center is 14.6" for SEAL 2ft and 35.0" for SEAL 4ft *(Fig. 2)*.
2. Secure *(2)* **Snap on Brackets** *(supplied standard with Housing)* to **ANGSEAL Brackets** *(2)* with **Screws** *(4 provided)*.
3. Snap **Housing** on **Snap on Brackets.** Ensure that the **Housing** is secure on **Snap on Brackets** *(2)* onto the grooves on **Lens** as shown in Fig. 3.

Fig: 1

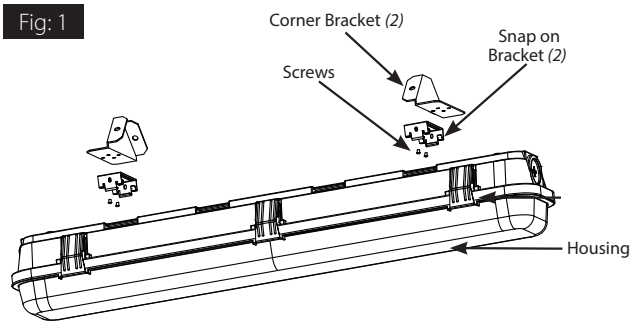

Fig: 2

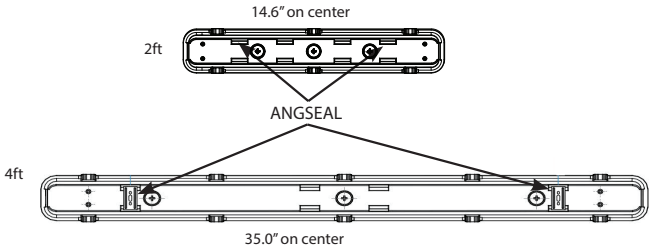

TROUBLESHOOTING

1. Check that line voltage at the fixture is correct. Be sure the fixture is grounded properly.
2. Refer to wiring, cleaning and maintenance directions on SEAL® *(sold separately)* Installation Instructions.

Note: *These instructions do not cover all details or variations in equipment nor do they provide for every possible situation during installation, operation or maintenance.*

Fig: 3

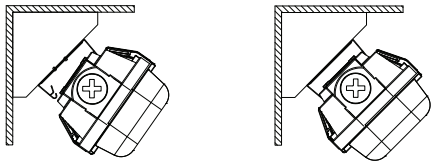

© 2022 RAB LIGHTING Inc.

ANGSEAL 2/4ft - IN 0822
P-100170

Easy Answers

rablighting.com
Visit our website for product info

Tech Help Line
Call our experts: 888 722-1000

e-mail
Answered promptly - sales@rablighting.com

Free Lighting Layouts
Answered online or by request

RAB WARRANTY: *RAB's warranty is subject to all terms and conditions found at rablighting.com/warranty.*